BOROUGH OF HIGHLANDS

LAND USE BOARD MEETING

151 Navesink Ave. - Court Room
Thursday, September 12, 2024 at 7:00 PM

AGENDA

Please be advised that the agenda as shown may be subject to change. This meeting is a quasi-judicial proceeding. Any questions or comments must be limited to issues that are relevant to what the board may legally consider in reaching a decision and decorum appropriate to a judicial hearing must be maintained at all times.

CALL TO ORDER: *The chair reserves the right to change the order of the agenda.*

PLEDGE OF ALLEGIANCE

OPEN PUBLIC MEETING STATEMENT: *As per requirement, notice is hereby given that this is a Regular Meeting of the Borough of Highlands Land Use Board and all requirements have been met. Notice has been transmitted to the Asbury Park Press and the Two River Times. Notice has been posted on the public bulletin board. Formal Action will be taken.*

ROLL CALL

OPEN FOR PUBLIC COMMENTS: *General Questions or Comments not pertaining to Applications*

COMMUNICATION AND VOUCHERS

APPROVAL OF MINUTES

1. August 8, 2024 LUB Meeting Minutes

RESOLUTIONS

2. Memorializing Resolution for LUB24-02: Cahill – 60 Bay Ave., B42 L1

3. Memorializing Resolution for LUB24-04: Nastasi – 19 Gravelly Point Rd, B100 L26.19

ACTION ON OTHER BUSINESS

4. Master Plan Consistency Review of O-24-15 Adopting Amended CBD Redevelopment Plan

HEARINGS ON OLD BUSINESS

5. LUB2022-10: Home & Land - 14 & 32 North Peak, B35 Ls 8 & 9

ADJOURNMENT

Board Policy: • All meetings shall adjourn no later than 10:00 P.M. unless a majority of the quorum present at said hour vote to continue the meeting to a later hour. • No new hearing shall commence after 9:15 P.M. unless the Chairperson shall rule otherwise. • The Chair may limit repetitive comments or irrelevant testimony and may limit the time or number of questions or comments from any one citizen to

ensure an orderly meeting and allow adequate time for members of the public to be heard.

BOROUGH OF HIGHLANDS
COUNTY OF MONMOUTH

LAND USE BOARD RESOLUTION 2024-16

MEMORIALIZATION OF PRELIMINARY AND FINAL SITE PLAN APPROVAL WITH ANCILLARY VARIANCE RELIEF

IN THE MATTER OF 60 BAY AVE HIGHLANDS LLC **Approved: August 8, 2024**
APPLICATION NO. LUB 2024-02 **Memorialized: September 12, 2024**

WHEREAS, an application for preliminary and final site plan approval has been made to the Borough of Highlands Land Use Board (hereinafter referred to as the "Board") by 60 Bay Ave Highlands LLC (hereinafter referred to as the "Applicant") on lands known and designated as Block 42, Lot 1, as depicted on the Tax Map of the Borough of Highlands (hereinafter "Borough"), and more commonly known as 60 Bay Avenue in the CBD (Central Business) Zone and CBD Redevelopment Overlay 2 – Gateway Parcels (C-RO-2) Zone; and

WHEREAS, a public hearing was held before the Board on August 8, 2024, with regard to this application; and

WHEREAS, the Board has heard testimony and comments from the Applicant, witnesses and consultants, and with the public having had an opportunity to be heard; and

WHEREAS, a complete application has been filed, the fees as required by Borough Ordinance have been paid, and it otherwise appears that the jurisdiction and powers of the Board have been properly invoked and exercised.

NOW, THEREFORE, does the Highlands Land Use Board make the following findings of fact and conclusions of law with regard to this application:

1. The subject Property contains 6,625 square feet (0.147 acres) with frontage along Bay Avenue (County Route 8) South Street and Shrewsbury Avenue within the Central Business

District (CBD) Zone and the CBD Redevelopment Overlay 2 Zone – Gateway Parcels (C-RO-2) Zone. The adjacent property, Lot 15, is located within the same zone, and adjacent residential Lot 7 is located within the R-2.02 District. The subject Property is located within the AE Flood Hazard zone, partially in the Coastal A zone, and in the Limit of the Moderate Wave Action (LiMWa) delineation area.

2. The subject Property is improved with a three-story multi-family dwelling.

3. The Applicant is seeking preliminary and final major site plan approval to move and elevate the existing three-story multi-family residential building, complete renovations, provide ground floor storage and garage parking, and construct two extensions, decks, and associated site improvements. The Applicant proposes to expand the existing multi-family residential building by increasing the number of units for a total of five (5) units and will include a one (1) one-car garage, two (2) 1.5-car garages, and one (1) two-car garage.

4. Counsel for the Applicant, Donna Jennings, Esq., stated that the Applicant was seeking preliminary and final site plan approval with design waiver relief to elevate the existing four (4) unit residential building and add an additional residential unit. Ms. Jennings identified the subject Property as Block 42, Lot 1 with the address of 60 Bay Avenue and located within the CBD (Central Business) Zone and CBD Redevelopment Overlay 2 – Gateway Parcels (C-RO-2) Zone. She stated that the ground floor would contain garages and storage.

5. The Applicant's Engineer, Douglas Clelland, P.E., introduced a Neighborhood Colorized Aerial dated July 26, 2024 as Exhibit A-1. Mr. Clelland identified the subject Property as Block 42, Lot 1 with the address of 60 Bay Avenue and located within the CBD (Central Business) Zone and CBD Redevelopment Overlay 2–Gateway Parcels (C-RO-2) Zone. He stated that the

subject Property contained three (3) frontages which included Bay Avenue, South Street, and Shrewsbury Avenue. Mr. Clelland further testified that other residential lots were located to the west of the subject Property and a park was located across South Street and Shrewsbury Avenue. He described the area as a mix of commercial, residential, and multi-family residential uses.

6. Mr. Clelland further testified that the Applicant was proposing to relocate, elevate, and expand the existing multi-family residential building. Mr. Clelland introduced a Blown-up Version of the Neighborhood Colorized Aerial dated July 26, 2024 as Exhibit A-2. He explained that the Applicant was proposing to provide a new driveway on the Bay Avenue frontage and as well as a new driveway on Shrewsbury Avenue frontage. He stated that the ground level would contain garages and storage. Mr. Clelland further testified that a multi-level deck would surround the building and that a walkway would connect to the sidewalk. He then confirmed that the structure currently had four (4) units, and that the Applicant was proposing an additional unit which would be located in the addition to the building resulting in a total of five (5) residential units.

7. Mr. Clelland also confirmed that the proposal did not require any variance relief. He stated that the Applicant was, however, seeking design waiver relief from the driveway width at the curb of 19.09 feet where a maximum of 18 feet at the curb was permitted. Mr. Clelland stated that the existing driveway width at the curb was 30 feet and that the proposed driveway width would be an improvement from the existing condition. He further testified that the wider driveway was necessary because of the unique shape of the subject Property. He explained that the unique shape required the driveway to be at an angle to the garage and that the wider

driveway allowed cars to maneuver into the garage while also providing two (2) parking spaces within the driveway.

8. Mr. Clelland further testified that the proposal complied with the EV charging space regulations. He explained that EV chargers were only required to be installed for developments with ten (10) parking spaces or greater whereas only seven (7) parking spaces were proposed. Mr. Clelland also stated that the Ordinance permitted the inclusion of on-street parking spaces in the calculation and identified three (3) on-street parking spaces provided along the frontages. He explained that the number of parking spaces might require a *de minimis* exception from the Residential Site Improvement Standards (RSIS). Mr. Clelland testified that one (1) tandem two-car garage was proposed which would be accessed from Shrewsbury Avenue. He also stated that two (2) 1.5-car garages which only equated to one (1) parking space, would be accessed from Bay Avenue, and a one (1) one-car garage would be accessed from Bay Avenue.

9. Mr. Clelland further testified that he had observed the available street parking within 200 feet of the subject Property on two occasions. He stated that he observed the subject Property on Friday, July 26, 2024 at 6:00 p.m. and Saturday, July 27, 2024 at 2:00 p.m. Mr. Clelland explained that he observed a total of fourteen (14) on-street parking spaces available on Friday evening, none of which were on Shrewsbury Avenue. He also stated that a total of six (6) on-street parking spaces were available on Saturday afternoon.

10. Mr. Clelland further testified that all new utilities would be provided to the building and that electric would be underground. He also stated that the proposal would result in an increase in impervious coverage but was not classified as a major development for

stormwater management purposes. Mr. Clelland also stated that the impervious coverage would comply with all bulk requirements. He further testified that the roof leaders would be drained to the existing stormwater inlet within South Street. Mr. Clelland explained that the proposed roof leaders would reduce the stormwater sheet flow because the existing building did not have any gutters. He further testified that the grade of the subject Property would be pitched toward the streets away from the adjacent lots.

11. Mr. Clelland also stated that trash cans would be located at the rear of the building and then taken out to the street for pick up. He explained that the location of the trash storage was located at the northwesterly side of the building near the existing fence.

12. Mr. Clelland further testified that the Applicant was proposing residential light fixtures similar to the existing light fixtures but would require design waiver relief. He stated that the proposed luminosity was the minimum necessary for safety while also providing the minimal amount of impact. Mr. Clelland also believed that the lighting would also illuminate the driveway for safe ingress and egress. Mr. Clelland further testified that the 1.7 footcandles provided a blend with the existing on-street lighting which was included within the analysis. He also confirmed that the illumination was 0.6 footcandles at the property line.

13. Mr. Clelland further testified that the existing street trees would remain. He stated that evergreen trees would also be planted in order to provide a screen for Lot 2. Mr. Clelland then identified an existing fence located on Lot 15 along the shared property line. He stated that the Applicant was proposing a fence that would connect to the existing Lot 15 fence at a 90-degree angle and run along the property line with Lot 2. Mr. Clelland explained that two (2) shade trees would be provided.

14. Mr. Clelland also stated that the Applicant would apply to the NJDEP for CAFRA permit. He believed that the proposed elevation would be compliant with all regulations. He stated that the Applicant would also apply to Monmouth County Planning Board because Bay Avenue was a county road.

15. In response to questions from the Board Engineer, Carmela Roberts, P.E., CME, CPWM, Mr. Clelland testified that the building was being enlarged and relocated. He also stated that the Zoning Permit denial was not based upon the Redevelopment Plan standards.

16. In response to further questions from the Board Engineer, Mr. Clelland testified that the tandem garage and the driveway parking space directly in front of the garage would be assigned to the three-bedroom unit which was anticipated to be owned by the owner of the building. He also stated that the three (3) of the other units have a garage space and that the fifth unit would have a parking space within the driveway. Mr. Clelland agreed to provide a turning analysis for the driveway. He then explained that the purpose of the wider driveway was to provide an additional 9 ft. x 18 ft. parking space within the driveway.

17. In response to further questions from the Board Engineer, Mr. Clelland testified that the Applicant was proposing three (3) curb cuts along Bay Avenue. He stated that one (1) curb cut was presently existing and was wide enough for two (2) driveways. He further testified that the third curb cut would eliminate one (1) existing on-street parking space. Mr. Clelland explained that the distance from the curb cut closest to the intersection was 26.91 feet to the property line at the intersection, therefore the distance to the curb of the intersection was a little more than 26.91 feet. He also stated that the existing curb cut was the western most curb cut.

Mr. Clelland further testified that two (2) new curb cuts were proposed. He stated that the curb cuts would be subject to review and approval by the Monmouth County Planning Board.

18. Ms. Roberts stated that the lighting of 1.7 footcandles on the sidewalk was excessive. She explained that it was not the responsibility of a residential building to illuminate a public sidewalk. Mr. Clelland agreed to work with the Board Engineer to reduce the lighting at the property line to become compliant, thereby eliminating need for design waiver for lighting.

19. In response to questions from the Board Attorney, Ms. Jennings represented that the proposal was not subject to the affordable housing requirements because only one (1) unit was being added, but the Applicant would comply with the affordable housing requirements if applicable.

20. In response to questions from the Board, Mr. Clelland testified that the fence along Lot 2 could transition to a four (4) foot fence within the front yard. He stated that the fence would not obstruct sight distance at the driveway. Mr. Clelland explained that the existing fence on Lot 15 transitioned from six (6) feet in height to four (4) feet in height approximately fifteen (15) feet setback from the front property line. He also stated that the fence on Lot 15 encroached slightly on the subject Property. He agreed to discuss with the owner of Lot 15 correcting the encroachment if the fence were ever to be replaced.

21. In response to questions from the Board, Mr. Clelland confirmed that there was one (1) driveway on Shrewsbury Avenue and three (3) driveways on Bay Avenue. He stated that drivers within the driveway on Bay Avenue would back out onto Bay Avenue. He testified that the minimum front yard setback was two (2) feet, whereas five (5) feet was proposed on Bay

Avenue, 8.3 feet was proposed on South Street, and 8.05 feet was proposed on Shrewsbury Avenue.

22. The Board expressed its concern with drivers backing out onto Bay Avenue, particularly considering the proximity of the nearby curve. Mr. Clelland testified that he was unaware of any issues with the current driveway on Bay Avenue.

23. In response to further questions from the Board, Mr. Clelland testified that the distance between the curb cuts was approximately thirty-five (35) feet, which he opined was sufficient for one (1) on-street parking space. He also stated that utilities were available within Shrewsbury Avenue and South Street if a moratorium preventing a street opening on Bay Avenue.

24. In response to further questions from the Board, Mr. Clelland testified that the existing building contained three (3) two-bedroom units and one (1) studio unit. He stated that the Applicant was proposing one (1) additional unit.

25. The hearing was then opened to the public for questions of the Applicant's Engineer, at which time Ed Sharkey, 9 Shrewsbury Avenue, asked why the commercial building setback requirements did not apply to the multi-family building. Mr. Clelland stated that the building was residential, not commercial and therefore the commercial building standards did not apply. In response to further questions from Mr. Sharkey, Mr. Clelland stated that the trash cans would be brought out to Shrewsbury Avenue and Bay Avenue. He testified that a row of eighteen (18) evergreen trees would also be planted along the property line with Lot 2 which has Mr. Sharkey's property. Mr. Clelland then confirmed that the two-car garage would be tandem. He also stated that the proposed multi-family building was compliant with the code and the zone therefore it was not necessary for the Applicant to consider alternative uses. Mr. Clelland further

testified that the maximum permitted impervious coverage was 80%, whereas 62% was proposed.

26. The Applicant's Architect, Salvatore LaFerlita, R.A., AIA, testified that the Applicant was proposing to lift the building, replace the foundation, and move the building eight (8) feet toward Bay Avenue. He stated that the Applicant was also proposing to construct an addition on the side of the building and along the Shrewsbury Avenue frontage. Mr. LaFerlita further testified that three (3) units would be served by a one-car garage and that the largest unit would receive the tandem two-car garage and one (1) driveway space. He also noted that one (1) unit would receive additional driveway space. Mr. LaFerlita explained that gravel could be placed within the five (5) feet between the driveway and the property line, which would eliminate the need for the wider driveway at the curb because the gravel would allow a wider turn. The Applicant agreed to provide such gravel to comply with the required driveway width at the curb, thereby eliminating the need for the design waiver. He also stated that bike racks would be located inside and outside of the building. He stated that the building would contain an elevator.

27. Mr. LaFerlita further testified that the first floor would contain two (2) two-bedroom units. He explained that the existing studio apartment would be expanded into the addition to make it two (2) bedrooms. Mr. LaFerlita also stated that the existing deck would be enclosed to provide living space. He explained that an additional deck area of approximately 100 square feet would also be provided. Mr. LaFerlita further testified that the second floor would include two (2) two-bedroom units similar to the first floor. He stated also located on the second floor would also have a bedroom belonging to the third floor three-bedroom unit which would be accessed by a staircase internal to the three-bedroom unit. Mr. LaFerlita testified that the

third floor contained two (2) out of three (3) of the three-bedroom unit along with decks. He also stated that the A/C equipment would be located on a roof deck near the elevator. Mr. LaFerlita stated that the main entry to a large porch would be located on the first floor. He noted that the existing yellow color would be changed. He introduced a Color Rendering of the Bay Avenue Elevation as Exhibit A-3.

28. In response to questions from the Board, Mr. LaFerlita testified that the floor elevation was at fourteen (14) feet and was compliant with FEMA Flood Hazard regulations. He further testified that the building would comply with the Coastal A & AE requirements by being built to VE requirements. He stated that the ground floor may require breakaway walls.

29. The hearing was then opened to the public, at which time Ed Sharkey, 9 Shrewsbury Avenue, asked the size of the decks. Mr. LaFerlita testified that the decks were a length of twenty-five (25) to thirty (30) feet with a depth of ten (10) feet. Mr. LaFerlita also stated that the size of the decks was compliant. Mr. Sharkey asked if the building could also be moved toward the southeast. Mr. LaFerlita stated that such reorientation would be difficult. In response to further questions from Mr. Sharkey, Mr. LaFerlita testified that an additional parking space could be provided under the deck, however, it would require an additional curb cut. Mr. LaFerlita stated that the trash cans could also be stored within the garages. He further testified that the existing square footage of the building was approximately 5,000 square feet and approximately 7,000 square feet was proposed.

30. Mr. Sharkey also testified that the previous owner of the subject Property had imported soil, which changed the stormwater flow pattern. He stated his property was negatively impacted by the change in stormwater flow pattern. Mr. Clelland testified that the subject

Property would be regraded when the building was lifted. He opined that the stormwater would then flow toward the streets and away from adjacent properties. Mr. Sharkey also reiterated his interpretation of the Ordinance requiring the building to have setback of twelve (12) feet as is required of commercial buildings within the CBD Zone.

31. There were no other members of the public expressing an interest in this application.

WHEREAS, the Highlands Land Use Board, having reviewed the proposed application and having considered the impact of the proposed application on the Borough and its residents to determine whether it is in furtherance of the Municipal Land Use Law; and having considered whether the proposal is conducive to the orderly development of the site and the general area in which it is located pursuant to the land use and zoning ordinances of the Borough of Highlands; and upon the imposition of specific conditions to be fulfilled, hereby determines that the Applicant's request for preliminary site plan approval pursuant to N.J.S.A. 40:55D-46 and final site plan approval pursuant to N.J.S.A. 40:55D-50 should be granted in this instance.

The Board finds that the Applicant has proposed to move and elevate and existing three-story multi-family residential building, complete renovations, provide ground floor storage and garage parking, and construct two extensions, decks, and associated site improvements. The proposal does not require any variance or design waiver relief. The Board finds that the Applicant had initially requested several design waivers, but has agreed to comply with all design standards. The proposal is therefore as of right. The Board finds that the proposal complies with all requirements of the site plan, zoning and design criteria Ordinances. A planning variance required by the MLUL to grant site plan approval when all Ordinance requirements are complied

with an ingress and egress is safe. There has not been any testimony which could lead to the conclusion that ingress and egress was unsafe. The applicant is also subject to the conditions expressed herein. The Board is therefore required to grant preliminary site plan approval pursuant to N.J.S.A. 40:55D-46 and final site plan approval pursuant to N.J.S.A. 40:55D-50.

NOW, THEREFORE, BE IT RESOLVED by the Land Use Board of the Borough of Highlands on this 12th day of September 2024, that the action of the Land Use Board taken on August 8, 2024, granting application no. LUB 2024-02, for preliminary site plan approval pursuant to N.J.S.A. 40:55D-46 and final site plan approval pursuant to N.J.S.A. 40:55D-50 is hereby memorialized as follows:

The application is granted subject to the following conditions:

1. All site improvements shall take place in strict compliance with the testimony and with the plans and drawings which have been submitted to the Board with this application, or to be revised.
2. Except where specifically modified by the terms of this resolution, the Applicant shall comply with all recommendations contained in the Reports of the Board professionals.
3. The Applicant shall comply with all applicable design standards and eliminate all design waiver relief pursuant to N.J.S.A. 40:55D-51.
4. The fence along the shared property line with Lot 2 shall not exceed a height of four (4) feet within the front yard.
5. The Applicant shall submit a compliant lighting plan subject to the review and approval of the Board Engineer.
6. The Applicant shall submit a revised plan depicting vehicles maneuvering from the garages and driveways into the roadways subject to review and approval of the Board Engineer.
7. The driveway width at the curb shall not exceed eighteen (18) feet and shall comply with all Ordinance requirements.
8. The Applicant shall provide gravel between the Shrewsbury driveway and the property line shared with Lot 2 sufficient for turning maneuver into the driveway parking space subject to review and approval by the Board Engineer.

9. Any future modifications to this approved plan must be submitted to the Board for approval.
10. The Applicant shall apply for a CAFRA permit.
11. The Applicant shall extend new utilities to the subject Property. The Applicant shall be solely responsible for securing any necessary utility easements.
12. The Applicant shall comply with any applicable affordable housing requirements.
13. The tandem parking spaces shall be for the exclusive use of the three (3) bedroom unit.
14. The fence encroachment shall be eliminated if the fence is replaced.
15. The A/C unit shall be located on the roof near the elevator/
16. The Applicant shall provide a certificate that taxes are paid to date of approval.
17. Payment of all fees, costs, escrows due and to become due. Any monies are to be paid within twenty (20) days of said request by the Board Secretary.
18. Subject to all other applicable rules, regulations, ordinances and statutes of the Borough of Highlands, County of Monmouth, State of New Jersey or any other jurisdiction.

BE IT FURTHER RESOLVED that the Board secretary is hereby authorized and directed to cause a notice of this decision to be published in the official newspaper at the Applicant's expense and to send a certified copy of this Resolution to the Applicant and to the Borough Clerk, Engineer, Attorney and Tax Assessor, and shall make same available to all other interested parties.

_____
Robert Knox, Chairman
Borough of Highlands Land Use Board

ON MOTION OF:
SECONDED BY:
ROLL CALL:
YES:
NO:
ABSTAINED:
ABSENT:
DATED:

I hereby certify this to be a true and accurate copy of the Resolution adopted by the Highlands Land Use Board, Monmouth County, New Jersey at a public meeting held on September 12, 2024.

_____

Nancy Tran, Secretary
Borough of Highlands Land Use Board

BOROUGH OF HIGHLANDS
COUNTY OF MONMOUTH

LAND USE BOARD RESOLUTION 2024-17

MEMORIALIZATION OF HEIGHT VARIANCE AND BULK VARIANCE RELIEF

IN THE MATTER OF JOHN AND SHARI NASTASI **Approved: August 8, 2024**
APPLICATION NO. LUB2024-04 **Memorialized: September 12, 2024**

WHEREAS, an application for height variance and bulk variance relief has been made to the Borough of Highlands Land Use Board (hereinafter referred to as the "Board") by John and Shari Nastasi (hereinafter referred to as the "Applicants") on lands known and designated as Block 100, Lot 26.19, as depicted on the Tax Map of the Borough of Highlands (hereinafter "Borough"), and more commonly known as 19 Gravelly Point Road, Highlands, New Jersey, in the Bungalow Colonies area of the R-2.03 Single-Family Residential (R-2.03) Zone District (hereinafter "Property"); and

WHEREAS, a live public hearing was held before the Board on August 8, 2024, with regard to this application; and

WHEREAS, the Board has heard testimony and comments from the Applicant, witnesses and consultants, and with the public having had an opportunity to be heard; and

WHEREAS, a complete application has been filed, the fees as required by Borough Ordinance have been paid, and it otherwise appears that the jurisdiction and powers of the Board have been properly invoked and exercised.

NOW, THEREFORE, does the Highlands Land Use Board make the following findings of fact and conclusions of law with regard to this application:

1. The subject Property is an existing undersized lot containing 2,758.25 square feet (0.06 acres) with 50.15 feet of frontage along Gravelly Point Road within Bungalow Colonies area

of the R-2.03 Single-Family Residential (R-2.03) Zone District. The subject Property is located within the AE Flood Hazard Area.

2. The subject Property is improved with an existing elevated two-story frame dwelling with existing garage under parking, with an elevated addition with garage under parking, decking, and stairs. The Applicants are proposing to construct a third floor which will include one (1) additional bedroom. Utilities will be elevated and located in the proposed attic. The Applicants propose paring in the existing and proposed garage as well as the under-parking area. The existing decking and stairs are proposed to be removed, and the existing shed and attached covered area are proposed to remain unchanged.

3. Counsel for the Applicants, Edward McKenna, Esq., identified the subject Property as Block 100, Lot 26.19, with the address of 19 Gravelly Point Road, Highlands, New Jersey, and located within the Bungalow Colonies area of the R-2.03 Single-Family Residential (R-2.03) Zone District. Mr. McKenna stated that the Applicants were seeking variance relief to permit pre-existing non-compliant conditions. He also represented that revisions had been made to the plans in response to the Board Engineer's Report. Mr. McKenna explained that the Applicants were seeking height variance relief from the Bungalow Colonies standards and noted that the proposed height would be compliant if the R-2.03 zone standards were applicable.

4. The Applicants' Architect, Catherine Franco, AIA, testified that the Applicants were proposing to elevate the existing bungalow to provide needed garage space. She stated that the dwelling would be brought into compliance with the latest building standards and that the ground level would contain the garage. Ms. Franco further testified that the Applicants were proposing to remove an existing bedroom on the first level and enlarge the kitchen. She also stated that the second level would contain three (3) bedrooms and two (2) bathrooms. Ms.

Franco explained that the existing ceiling height was ten (10) feet and nine (9) feet on the first and second levels, respectively. She testified that the roof was not flat.

5. Ms. Franco further testified that the proposal would eliminate the need for on-street parking by providing three (3) parking spaces onsite within the garage. She stated that the parking spaces would be tandem. Ms. Franco further explained that elevating the dwelling would also place the utility out of the flood level by locating them in the attic. She stated that the A/C units would remain in the existing location but would be mounted upon a raised platform.

6. In response to questions from the Board, Ms. Franco testified that the attic was accessed by pull down stairs. She stated that the height of the collar ties in the attic was four (4) feet, therefore the attic would not be living space.

7. Testimony was then taken from John Caruso, how identified himself as the owner of Lil' Johns Construction, LLC, which was serving as the Applicants' General Contractor. Mr. Caruso testified that he had constructed fourteen (14) new houses, ten (10) renovations, and three (3) lifts on Gravelly Point Road. He also stated that he resides on Gravelly Point Road. Mr. Caruso opined that the proposal would be similar to the other houses on the street which he had constructed, renovated and lifted. He, therefore, believed that the proposed dwelling improvements would conform with the surrounding area. He also stated that the proposal would not impair the zone or the public good.

8. The Applicants confirmed the need for the following variance relief:

Requirement	R-2.03 Residential Zone	Bungalow Colonies Required	Existing Lot 26.19 Bungalow Colonies	Proposed Lot 26.19 Bungalow Colonies
Minimum Lot Area	5,000 sf	5,000 sf	2,758.25 sf**	2,758.25 sf*
Lot Frontage/Width	50 ft	50 ft	50.15 ft	50.15 ft
Minimum Lot Depth	100 ft	100 ft	55.0 ft**	55.0 ft*
Minimum Front Yard Setback	20 ft	3 ft	5.1 ft	4.11 ft
Minimum Side Yard Setback	6 ft/8 ft	3 ft	6.56 ft/11.7 ft	5.46 ft/4.1 ft
Minimum Rear Yard Setback	20 ft	3 ft	2.37 ft**	2.37 ft*
Maximum Building Height***	30 ft	20 ft	16.0 ft	29.1 ft*
Maximum Lot Coverage****	75%	75%	53.4%	69.8%
Maximum Building Coverage****	30%	35%	43.3%	59.3%
On-Site Parking	2 spaces	1 space	3 spaces	3 spaces

*Proposed Variance
**Existing non-conformity
*** Where a dwelling is constructed or reconstructed to provide the required parking under the structure, the maximum height shall be increased by two and one-half (2 ½) feet.
**** §21-86 A.4.b(c) Total building coverage shall not exceed thirty-five (35%) percent of the total lot area and total lot coverage shall not exceed seventy-five (75%) percent except for those situated in Block 100, Lots 26.01-26.76 and Block 69, Lots 15.01-15.28.

9. There were no members of the public expressing an interest in this application.

WHEREAS, the Highlands Land Use Board, having reviewed the proposed application and having considered the impact of the proposed application on the Borough and its residents to determine whether it is in furtherance of the Municipal Land Use Law; and having considered whether the proposal is conducive to the orderly development of the site and the general area in which it is located pursuant to the land use and zoning ordinances of the Borough of Highlands; and upon the imposition of specific conditions to be fulfilled, hereby determines that the Applicants should be granted bulk variance relief pursuant to both N.J.S.A. 40:55D-70c(1) and c(2), as well as height variance relief pursuant to N.J.S.A. 40:55D-70d(6) in this instance.

The Applicants require the following variance relief:

a. ***Section 21-86A.4.b(2)(d)*** – The maximum permitted building height is 20 feet, whereas 29.1 feet is proposed.
b. ***Section 21-86A.4.b(2)(a)*** – Detached accessory structures are prohibited in the minimum required yard area, whereas the existing shed and covered area are located within the side yard setback and rear yard setback. The existing shed and covered area are to remain.
c. ***Section 21 Attachment I*** – The Minimum lot area is 5,000 square feet, whereas 2,758.25 feet is existing and proposed.
d. ***Section 21 Attachment I*** – The Minimum Lot Depth is 100 feet, whereas 55.0 feet is existing and proposed.
e. ***Section 21 Attachment I*** – The Minimum Rear Yard setback is 3 feet, whereas 2.37 feet is existing and proposed.
f.

I. Height Variance Relief

The Applicants require height variance approval pursuant to the Municipal Land Use Law pursuant to N.J.S.A. 40:55D-70d(6). The subject Property is located in the Bungalow Colonies area of the R-2.03 Single-Family Residential (R-2.03) Zone District and the maximum height of a principal structure in the zone is 20 feet. The Applicant, therefore, requires height variance relief because the height of the principal structure exceeds by 9.1 feet or 45.50% the maximum height permitted in the district for a principal structure.

In Grasso v. Borough of Spring Lake Heights, 375 N.J. Super. 41 (App. Div. 2004), the Court explored reasons for adopting height limitations. The Grasso Court found that special reasons may be established by demonstrating an undue hardship, which for a d(6) variance requires a showing that the height restriction prohibits the use of the property for a conforming structure, or in the alternative by demonstrating that the increased height of the building does not offend the purpose of the height restriction which the court characterized as being focused primarily on light and air concerns as well as providing an opportunity to control density.

The Board finds that the Applicants have satisfied the positive criteria. The Board finds that the proposed height comports with the density of the area. The Board finds that the majority of the dwellings in the area are of comparable height. The Board further finds that the proposed height will not block any view corridors for surrounding neighbors or cast undue shade upon adjoining properties. The Board also finds that the proposed height will allow additional on-site parking which would alleviate the demand for on-street parking in the area. The proposed height will also better protect the home from flood damage. The Board therefore finds that the positive criteria have been satisfied.

The Board also finds that the negative criteria has been satisfied for the reasons expressed infra in the bulk variance section. The Board concludes that the positive criteria substantially outweighs the negative criteria and height variance relief may be granted pursuant to N.J.S.A. 40:55D-70d(6).

II. Bulk Variance Relief

The Board finds that the Applicants have proposed construction which requires bulk variance relief. The Municipal Land Use Law, at N.J.S.A. 40:55D-70c provides Boards with the power to grant variances from strict bulk and other non-use related issues when the Applicant satisfies certain specific proofs which are enunciated in the Statute. Specifically, the Applicant may be entitled to relief if the specific parcel is limited by exceptional narrowness, shallowness or shape. An Applicant may show that exceptional topographic conditions or physical features exist uniquely affect a specific piece of property. Further, the Applicant may also supply evidence that exceptional or extraordinary circumstances exist which uniquely affect a specific piece of property or any structure lawfully existing thereon and the strict application of any regulation contained in the Zoning Ordinance would result in a peculiar and exceptional practical difficulty

or exceptional and undue hardship upon the developer of that property. Additionally, under the "c(2)" criteria, the Applicant has the option of showing that in a particular instance relating to a specific piece of property, the purpose of the Act would be advanced by allowing a deviation from the Zoning Ordinance requirements and the benefits of any deviation will substantially outweigh any detriment. In those instances, a variance may be granted to allow departure from regulations adopted, pursuant to the Zoning Ordinance.

Those categories specifically enumerated above constitute the affirmative proofs necessary in order to obtain "bulk" or (c) variance relief. Finally, the Applicant must also show that the proposed variance relief sought will not have a substantial detriment to the public good and, further, will not substantially impair the intent and purpose of the Zone Plan and Zoning Ordinance. It is only in those instances when the Applicant has satisfied both these tests that a Board, acting pursuant to the Statute and case law, can grant relief. The burden of proof is upon the Applicant to establish these criteria.

The Board finds that the Applicants have satisfied the positive criteria. The Board finds that the proposed improvements to the subject Property will upgrade the existing residential structure and will be consistent with neighboring development. The Board further finds that the proposed improvements will be aesthetically pleasing and create a desirable visual environment which will be more commensurate with other homes in the neighborhood in terms of size and setbacks. The Board further finds that the subject Property is unique and unusual with respect to its dimensions. Ultimately, the Board finds that the grant of variance relief will result in a visually desirable dwelling which will not only benefit the Applicant but will also advance the interests of the entire community. The Board therefore concludes that the goals of planning as enumerated

in N.J.S.A. 40:55D-2 have been advanced. The Applicants have therefore satisfied the positive criteria.

The Board also finds that the negative criteria has been satisfied. The proposed improvements requiring variance relief will not cause a detriment to the community in any discernible way. In fact, the Board finds that proposed addition will still be consistent and fit in seamlessly with the prevailing neighborhood residential scheme. The proposal is consistent with the Borough's overall goals and objectives of providing new, safe and visually attractive homes and will advance the general welfare by providing increased privacy and sound attenuation for both the Applicants and the neighbors alike. Granting of the variances sought by the Applicants will also not result in any substantial detriment to the public welfare or impair the purpose or intent of the Zone Plan or Zoning Ordinance. The Board therefore concludes that the negative criteria has therefore been satisfied pursuant to N.J.S.A. 40:55D-70c(2).

The Board concludes that the positive criteria substantially outweighs the negative criteria and that bulk variance relief may be granted pursuant to N.J.S.A. 40:55D-70c(2).

NOW, THEREFORE, BE IT RESOLVED by the Borough of Highlands Land Use Board on this 12th day of September 2024, that the action of the Board taken on August 8, 2024, granting application no. LUB 2024-04 of John and Shari Nastasi for bulk variance relief pursuant to N.J.S.A. 40:55D-70c(1) and "c(2)" and height variance relief pursuant to N.J.S.A. 40:55D-70d(6) is hereby memorialized as follows:

The application is granted subject to the following conditions:

1. All site improvement shall take place in strict compliance with the testimony and with the plans and drawings which have been submitted to the Board with this application, or to be revised.

2. Except where specifically modified by the terms of this Resolution, the Applicants shall comply with all recommendations contained in the Reports of the Board's Professionals.
3. The Applicants shall apply for all necessary Zoning Permit(s).
4. The attic shall not be used as living space.
5. The Applicants shall provide a certificate that taxes are paid to date of approval.
6. Payment of all fees, costs, escrows due or to become due. Any monies are to be paid within twenty (20) days of said request by the Board Secretary.
7. Subject to all other applicable rules, regulations, ordinances and statutes of the Borough of Highlands, County of Monmouth, State of New Jersey, or any other jurisdiction.

BE IT FURTHER RESOLVED that the Board secretary is hereby authorized and directed to cause a notice of this decision to be published in the official newspaper at the Applicants' expense and to send a certified copy of this Resolution to the Applicants and to the Borough Clerk, Engineer, Attorney and Tax Assessor, and shall make same available to all other interested parties.

_____
Robert Knox, Chairman
Borough of Highlands Land Use Board

ON MOTION OF:
SECONDED BY:
ROLL CALL:
YES:
NO:
ABSTAINED:
ABSENT:
DATED:

I hereby certify this to be a true and accurate copy of the Resolution adopted by the Borough of Highlands Land Use Board, Monmouth County, New Jersey, at a public meeting held on September 12, 2024.

_____
Nancy Tran, Secretary
Borough of Highlands Land Use Board

BOROUGH OF HIGHLANDS
COUNTY OF MONMOUTH

ORDINANCE O-24-15

ADOPTING THE AMENDED CENTRAL BUSINESS DISTRICT REDEVELOPMENT PLAN PURSUANT TO THE LOCAL REDEVELOPMENT AND HOUSING LAW, *N.J.S.A*. 40A:12A-1 *Et Seq*.

WHEREAS, the Local Redevelopment and Housing Law, *N.J.S.A.* 40A:12A-1 *et seq*. (the "**Redevelopment Law**"), authorizes municipalities to determine whether certain parcels of land in the municipality constitute areas in need of redevelopment; and

WHEREAS, on June 2, 2021, by Resolution No. 21-126, and in accordance with the provisions of the Redevelopment Law, the Municipal Council (the "**Borough Council**") of the Borough of Highlands (the "**Borough**") authorized and directed the Land Use Board of the Borough (the "**Land Use Board**") to conduct a preliminary investigation to determine whether all or a portion of certain properties within the Borough, commonly referred to as the Central Business District/Bay Avenue Corridor and identified by block and lot on the tax map of the Borough listed therein (the "**Study Area**"), meet the criteria in the Redevelopment Law for designation as a non-condemnation redevelopment area, within which the Borough may use all of the powers provided by the Redevelopment Law for use in a redevelopment area except the power of eminent domain, and to make a recommendation as to whether all or a portion of such Study Area should be designated as a non-condemnation redevelopment area; and

WHEREAS, the Land Use Board subsequently directed Phillips Preiss Grygiel Leheny Hughes LLC (the "**PPG**"), the planning consultant, to conduct a preliminary investigation to determine whether all or a portion of the Study Area should be designated as a non-condemnation redevelopment area; and

WHEREAS, on July 8, 2021, the Land Use Board received a report setting forth the basis for the investigation and a map depicting the Study Area prepared by the PPG, entitled *Area in Need of Redevelopment Study, Central Business District, Borough of Highlands, New Jersey*, dated July 8, 2021 (the "**Report**"), evaluating whether all or a portion of the Study Area met the criteria to be designated as a non-condemnation redevelopment area; and

WHEREAS, pursuant to the Redevelopment Law, the Land Use Board caused a duly noticed public hearing to be held on August 5, 2021 (the "**Study Area Hearing**"), at which it reviewed the Report, heard testimony from Paul Grygiel, AICP, PP of PPG, and conducted a public hearing during which members of the general public were given an opportunity to present their own evidence, cross-examine PPG, and address questions to the Land Use Board and its representatives concerning the potential designation of the Study Area as a non-condemnation redevelopment area; and

WHEREAS, at the conclusion of the Study Area Hearing, after reviewing the Report and hearing all of the evidence, testimony from the public, and expert testimony, based on the reasons set forth in the Report and on the record, including the testimony of PPG as to criterion "h" of *N.J.S.A.* 40A:12A-5 ("**Section 5**") of the Redevelopment Law, the Land Use Board made recommendations to the Borough Council that the entire Study Area be designated as a non-condemnation redevelopment area pursuant to Section 5 of the Redevelopment Law, which recommendations and reasons for same were memorialized in Resolution No. 2021-21 duly adopted by the Land Use Board on October 7, 2021; and

WHEREAS, on October 20, 2021, by Resolution No. 21-199, the Borough Council accepted the Land Use Board's recommendations set forth in Resolution No. 2021-21 and designated the entire Study Area as a non-condemnation redevelopment area pursuant to the Redevelopment Law (the "**Redevelopment Area**") and authorized PPG to prepare one or more redevelopment plans for the Redevelopment Area; and

WHEREAS, on May 18, 2022 the Borough Council adopted Ordinance No. 22-10 adopting a redevelopment plan for the Redevelopment Area, entitled *Central Business District Redevelopment Plan* (the "**Original Redevelopment Plan**"); and

WHEREAS, following a review of the Original Redevelopment Plan, the Borough determined to amend the Original Redevelopment Plan to facilitate redevelopment within the Redevelopment Area; and

WHEREAS, Heyer, Gruel and Associates (the "**Planning Consultant**"), prepared an amended redevelopment plan for the Redevelopment Area, entitled *Amended Central Business District Redevelopment Plan*, dated August 21, 2024 (the "**Amended Redevelopment Plan**"); and

WHEREAS, pursuant to the Redevelopment Law, the Land Use Board must review the Amended Redevelopment Plan and transmit its recommendations relating to the Amended Redevelopment Plan to the Borough Council in accordance with the provisions of *N.J.S.A.* 40A:12A-7(e) of the Redevelopment Law; and

WHEREAS, in accordance with N.J.S.A. 40A:12A-7e, the Planning Consultant presented the Amended Redevelopment Plan to the Land Use Board during the September 12, 2024 meeting during which the Land Use Board reviewed the Amended Redevelopment Plan and considered the testimony of the Planning Consultant; and

WHEREAS, after conducting its review, the Land Use Board adopted a resolution finding that the Amended Redevelopment Plan is not inconsistent with the Borough's Master Plan and recommending that the Borough adopt the Amended Redevelopment Plan; and

WHEREAS, upon receipt and review of the Land Use Board's recommendations relating to the Amended Redevelopment Plan the Borough Council believes that adoption of the Amended Redevelopment Plan is in the best interests of the Borough and will best facilitate the appropriate development of the Redevelopment Area; and

WHEREAS, the Borough has determined to adopt the Amended Redevelopment Plan to ensure the success of redevelopment within the Redevelopment Area in conformity with the Borough's redevelopment objectives.

NOW, THEREFORE, BE IT ORDAINED, by the Borough Council of the Borough of Highlands, New Jersey, as follows:

Section 1. The foregoing recitals are herein incorporated as if set forth in full.

Section 2. The Amended Redevelopment Plan, as filed in the Office of the Borough Clerk and attached hereto as **Exhibit A**, is hereby approved and adopted pursuant to the terms of the Redevelopment Law.

Section 3. The sections of the zoning map of the Borough that relate to the Redevelopment Area are hereby amended to incorporate the provisions of the Amended Redevelopment Plan.

Section 4. The Zoning and Land Use Regulations of the Borough are hereby amended and supplemented to incorporate the Amended Redevelopment Plan.

Section 5. If any section, subsection, sentence, clause, or phrase of this Ordinance is for any reason held to be unconstitutional or invalid, such decision shall not affect the remaining portions of this Ordinance, which shall otherwise remain in full force and effect.

Section 6. All ordinances or parts of ordinances inconsistent herewith are hereby repealed to the extent of such inconsistency.

Section 7. A certified copy of this Ordinance and the Amended Redevelopment Plan shall be available for public inspection during regular business hours at the office of the Borough Clerk.

Section 8. This Ordinance shall take effect in accordance with applicable law.

First Reading and Set Hearing Date for O-24-15:

	INTRODUCED	SECOND	AYE	NAY	ABSTAIN	ABSENT
CERVANTES			X			
CHELAK			X			
MELNYK			X			
OLSZEWSKI		X	X			
BROULLON	X		X			

This is a Certified True copy of the Original Ordinance on file in the Municipal Clerk's Office.

DATE OF VOTE: August 21, 2024

_____

Nancy Tran, Municipal Clerk
Borough of Highlands

Public Hearing for O-24-15:

	INTRODUCED	SECOND	AYE	NAY	ABSTAIN	ABSENT
CERVANTES						
CHELAK						
MELNYK						
OLSZEWSKI						
BROULLON						

This is a Certified True copy of the Original Ordinance on file in the Municipal Clerk's Office.

DATE OF VOTE: September 18, 2024

_____

Carolyn Broullon, Mayor

_____

Nancy Tran, Municipal Clerk
Borough of Highlands

EXHIBIT A
AMENDED CENTRAL BUSINESS DISTRICT REDEVELOPMENT PLAN

AMENDED CENTRAL BUSINESS DISTRICT REDEVELOPMENT PLAN

BOROUGH OF HIGHLANDS

MONMOUTH COUNTY, NEW JERSEY

August 21, 2024

Prepared by: Phillips Preiss Grygiel Leheny Hughes LLC

Amended by: Heyer, Gruel and Associates

Amended Central Business District Redevelopment Plan
Borough of Highlands
Monmouth County, New Jersey

August 21, 2024

The Original Redevelopment Plan was prepared by

Paul Grygiel, AICP, PP
NJ Professional Planner License #5518

Phillips Preiss Grygiel Leheny Hughes LLC
Planning and Real Estate Consultants

33-41 Newark Street
Third Floor, Suite D
Hoboken, NJ 07030

Amendment prepared by

Heyer, Gruel & Associates
Community Planning Consultants
236 Broad Street
Red Bank, New Jersey 07701
732-741-2900

The original of this amended report was signed and sealed in accordance with N.J.A.C. 13:41-1.3.(b).

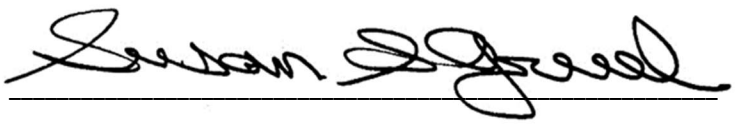

Susan S. Gruel, P.P. #1955

With Assistance from Bailey Surbrook, Associate Planner

Contents

I. INTRODUCTION 4
II. EXISTING CONDITIONS AND CONTEXT 6
III. VISION, GOALS AND RELATIONSHIP TO LOCAL OBJECTIVES 10
A. Vision 10
B. Redevelopment Plan Goals 10
C. Relationship to Master Plan 11
D. Relationship to Local Objectives 13
E. Relationship to Highlands Zoning Ordinance 14
F. Relationship to the Uniform Construction Code 14
G. Definitions and Terminology 14
IV. GENERAL RECOMMENDATIONS 15
A. Design 16
B. Coordination 16
C. Uses 16
D. Circulation 17
V. FLOOD REQUIREMENTS 17
VI. LAND USE REGULATIONS 17
A. Introduction 17
B. Gateway Parcels 17
C. Permitted Principal Uses 19
Permitted Accessory Uses 19
D. Supplemental Use Standards 19
VII. BULK REGULATIONS 21
A. Lot Size 21
B. Setbacks 21
C. Coverage 22
D. Floor Area Ratio 22
E. Building Height 22
F. Ground Floor Height 24
G. Required Open Spaces 24
VIII. PARKING AND CIRCULATION 25
A. Vehicular Parking 25

PARKING ACCESS 26
B. Bicycle Parking 27
IX. DESIGN STANDARDS 28
A. Building Design 28
BUILDING ORIENTATION AND ACCESS 28
FACADE TRANSPARENCY 28
MASSING AND ARTICULATION 29
ARCHITECTURAL STYLE AND MATERIALS 29
B. Public Improvements 30
X. REDEVELOPMENT ACTIONS 31
A. Appointment of Designated Redeveloper 31
B. Review Process 31
C. Properties to Be Acquired 32
D. Relocation 32
F. Duration of Plan 32
F. Other Actions 32
XI. GENERAL ADMINISTRATIVE REQUIREMENTS 33
A. Site Plan and Subdivision Review 33
B. Easements 33
C. Adverse Influences 33
D. Non-Discrimination Provisions 33
E. Affordable Housing Provisions 33
F. Deviation Requests 34
G. Escrows 34
H. Electric Vehicle Charging Infrastructure 34
XII. PLAN CONSISTENCY REVIEW 35
A. Relationship to Master Plans of Adjacent Municipalities 35
B. Relationship to the Monmouth County Master Plan 35
C. Relationship to the State Development and Redevelopment Plan 35
XIII. PROCEDURE FOR AMENDING THE PLAN 36
APPENDIX A: REDEVELOPMENT AREA TAX PARCELS 37

I. INTRODUCTION

A redevelopment plan is a powerful planning document that combines the vision of a master plan with the authority of a zoning ordinance. The redevelopment plan's special legal status provides a municipality with a more effective way to control the nature and type of development in a redevelopment area than is possible through standard zoning. Benefits of utilizing redevelopment plans include the ability to create very specific redevelopment plan regulations for uses and design and providing the municipality with greater control of the redevelopment process, such as through the selection of developers.

The preparation and adoption of a redevelopment plan moves the redevelopment process from problem identification to problem solving. With the adoption of a redevelopment plan, the focus shifts from an analysis of existing conditions in a designated area to a discussion of its future use and redevelopment. Adopting a redevelopment plan sends a message to the development community about the Borough of Highlands's (the "Borough") long-term commitment to the redevelopment of an area.

Redevelopment plans may be designed to address a wide range of public purposes and land use issues. The potential scope of a redevelopment plan may include: permitted uses, bulk regulations (e.g., height, setbacks, coverage, etc.), building massing/design, streetscape/open space, sustainability measures, and parking and loading.

This Redevelopment Plan (the "Redevelopment Plan") has been prepared for an area comprised of 155 parcels on portions of 31 tax blocks known as Blocks 40.01, 41, 42, 45, 46, 47, 52, 53, 54, 58, 59, 63, 64, 69, 70, 71, 72, 73, 74, 75, 80, 81, 82, 83, 88, 89, 94, 95, 96, 96.01, and 114 (heretofore referred to as the "Redevelopment Area") in the Borough of Highlands, Monmouth County, New Jersey. This Redevelopment Plan provides an overall vision for the Redevelopment Area, as well as general recommendations and specific development regulations. It supports and enhances the Borough's ongoing efforts to improve the Bay Avenue corridor and adjoining areas and to attract additional public and private investment.

This Redevelopment Plan provides development regulations for the Bay Avenue corridor between South Street and Gravelly Point Road and certain adjoining areas, including use and bulk standards for the area, as well as site, building design and other regulations typically found in a Redevelopment Plan. But it also provides a vision, goals and general recommendations for the Redevelopment Area, all of which build upon prior efforts for the Central Business District and nearby areas.

The plan was prepared through a process that included the input from the community through meetings and a survey, as well as the input of Borough staff and officials. Notably, the Bay Avenue Redevelopment Survey obtained input from a cross-section of Highlands residents, property owners and business owners which informs the recommendations and regulations in this Redevelopment Plan. Planning and development documents reviewed in the process of preparing the plan included the Borough's Master Plan and updates, the Zoning Ordinance, the Highlands Central Business District Design Manual, and various reports on prior planning efforts for the Redevelopment Area and nearby areas. The consultants also visited the Redevelopment Area and vicinity on a number of occasions to document existing conditions. Data about demographics, housing and development

was reviewed and analyzed, and maps were created based on information obtained from the Borough and other sources.

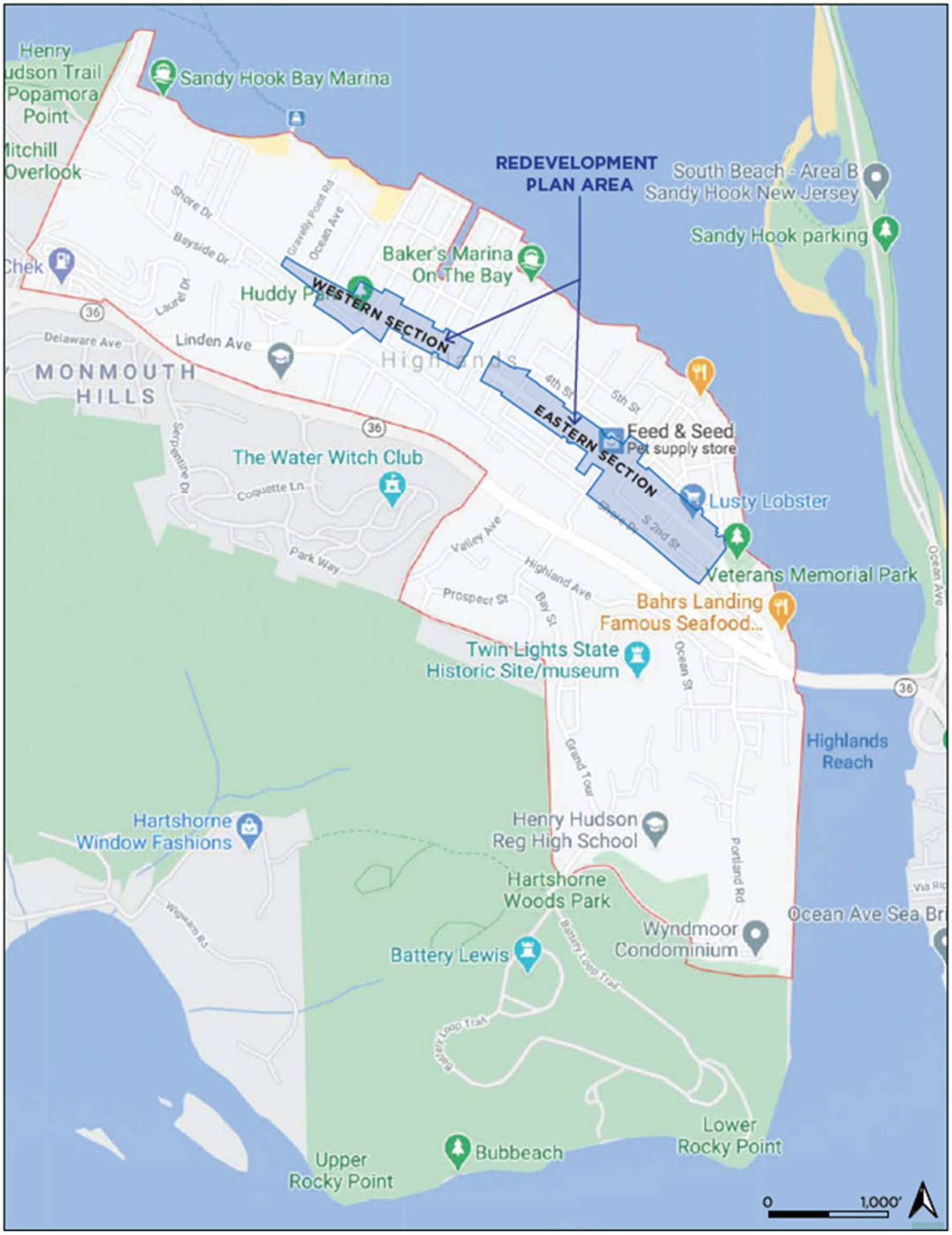

FIGURE 1: LOCATIONAL CONTEXT | BOROUGH OF HIGHLANDS, NJ
PHILLIPS PREISS GRYGIEL LEHENY HUGHES LLC 2021

II. EXISTING CONDITIONS AND CONTEXT

The Borough of Highlands is a unique municipality. Located along Sandy Hook Bay and the Shrewsbury River, its assets include a substantial waterfront, business districts, State Highway frontage, a State Historic Site, a range of residential development types, ferry service to New York City and easy access to the Atlantic Ocean, large parks and trails. **Figure 1** shows the Borough's locational context. However, Highlands faces a number of challenges, including flooding, traffic and fiscal limitations. There have been a number of plans and studies prepared in recent years for the Borough's commercial and residential districts. Actions have been taken to implement some of the recommendations of these documents, including adoption of zoning amendments in 2018. But there remain issues both specific to Highlands as well as those affecting downtowns and small business districts, even prior to the COVID-19 pandemic. This Redevelopment Plan is intended to help Highlands' Central Business District achieve its potential as both a community amenity and a destination.

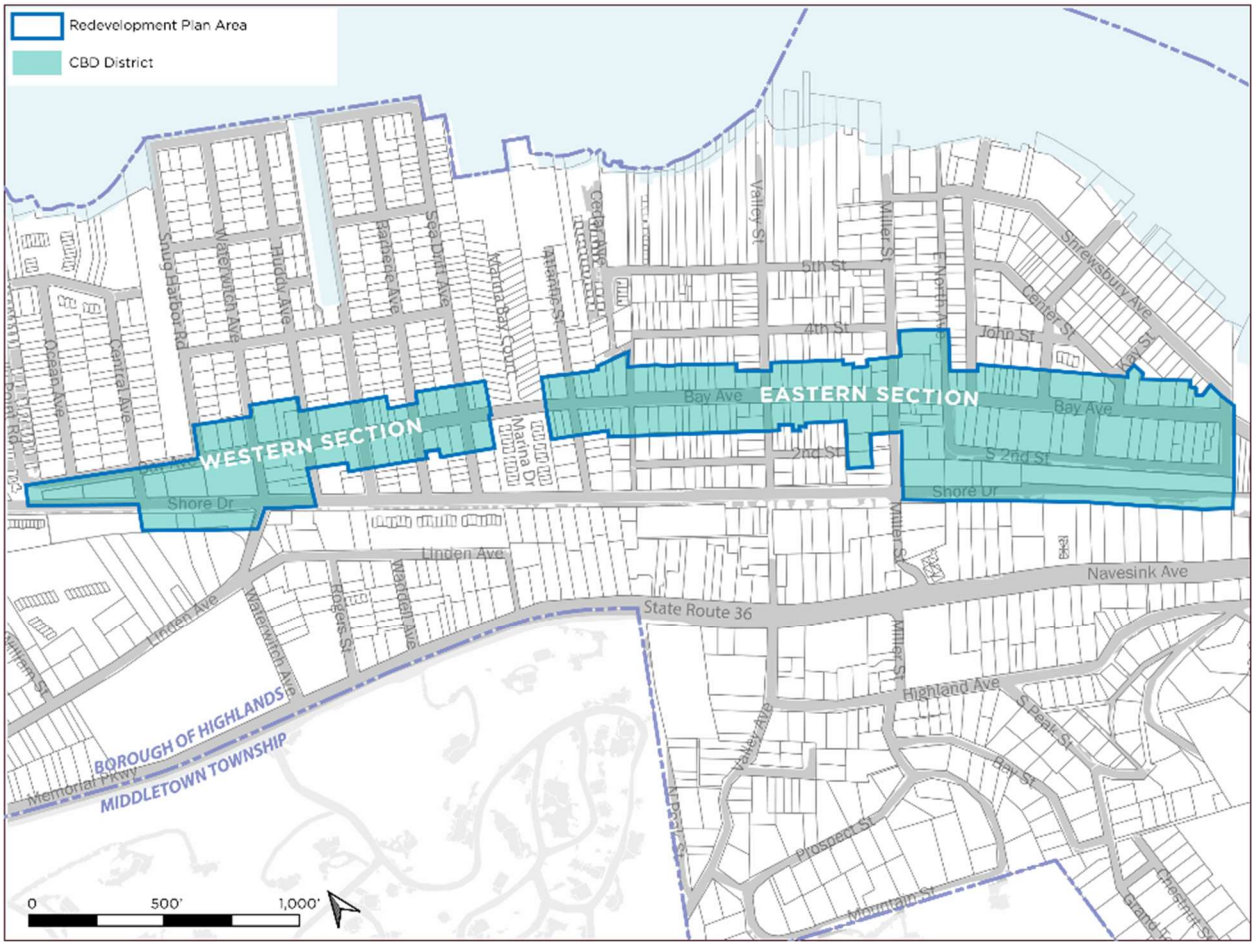

FIGURE 2: REDEVELOPMENT PLAN AREA AND CBD ZONE | BOROUGH OF HIGHLANDS, NJ
PHILLIPS PREISS GRYGIEL LEHENY HUGHES LLC 2021

The Redevelopment Area encompasses parts of 31 tax blocks located in the eastern section of the Borough of Highlands. The Redevelopment Area includes a portion of the parcels on Blocks 40.01, 41, 42, 45, 46, 47, 52, 53, 54, 58, 59, 63, 64, 69, 70, 71, 72, 73, 74, 75, 80, 81, 82, 83, 88, 89, 94, 95, 96, 96.01, and 114, as identified on the official tax maps of the Borough of Highlands. The Redevelopment Area is approximately 20.64 acres in area. It is defined by the boundaries of the CBD Zone as adopted on the Zoning Map by Ordinance 18-22 in December of 2018, which generally follows the north and south sides of Bay Avenue, and certain properties on both South Second Street and Shore Drive. **Figure 2** shows the boundaries of the Redevelopment Plan Area and the CBD zone.

Existing land uses in the Redevelopment Area include commercial, residential (one to four family), residential apartment, public property, municipal parks, a religious institution, a social institution, surface parking lots, and vacant, unimproved land. Land uses within the vicinity are varied and include a mix of residential and nonresidential uses. There are also various attractions and landmarks within the surrounding area. These include municipal and county parks, the Twin Lights State Historic Site and the Sandy Hook section of Gateway National Recreation Area.

The Redevelopment Area has been determined to be an "area in need of redevelopment" pursuant to the New Jersey Local Housing and Redevelopment Law (LRHL) at N.J.S.A. 40A:12A-1 et seq. The Mayor and Council of the Borough of Highlands adopted a resolution in February 2021 authorizing the Land Use Board to investigate all properties within the Central Business District zone to determine if they constituted an "area in need of redevelopment" pursuant to the LRHL. The Central Business District Area in Need of Redevelopment Study was prepared in July 2021. All of the properties in the redevelopment study area were designated as "an area in need of redevelopment" by resolution of the Mayor and Council on October 20, 2021, following a recommendation by the Borough of Highlands Land Use Board. The designated redevelopment area includes 155 parcels, which are listed in **Appendix A** and are shown on **Figures 3A** and **3B**.

Highlands Borough is located in a unique geographical area. The Highlands' hills overlook the Atlantic Ocean and Shrewsbury River, home to Historic Site Twin Lights, and the highest point on the Eastern Seaboard. The Central Business District Redevelopment Area is located at the base of the bluff at Shore Drive, and is in a floodplain managed by FEMA Floodplain Management Regulations (Land Use Chapter 21). Highlands manages the Floodplain on a platform (**https://highlandsboroughnj.withforerunner.com/properties**), that provides site-specific FEMA maps, and base/design flood elevations to the public. The current Base Flood Elevation (BFE) in this zone is 11 feet, meaning that the BFE is about 5 to 7 feet above grade in most areas of the Redevelopment Area.

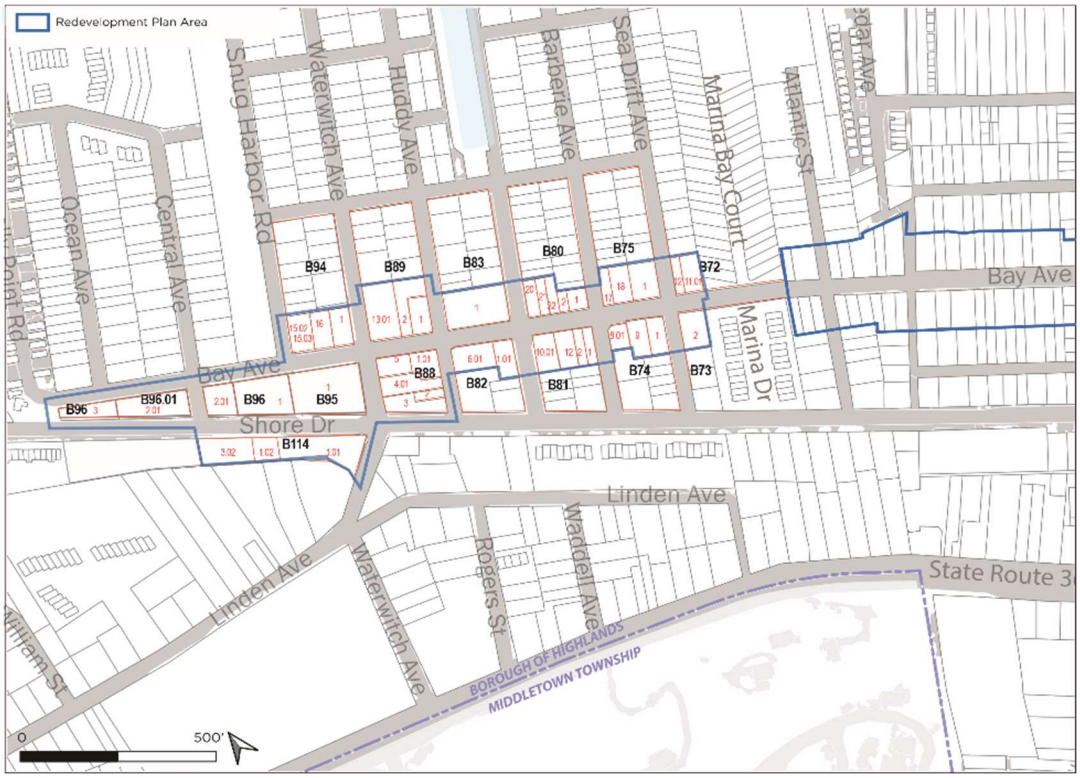

FIGURE 3A: REDEVELOPMENT AREA TAX LOTS WESTERN SECTION
PHILLIPS PREISS GRYGIEL LEHENY HUGHES LLC 2021

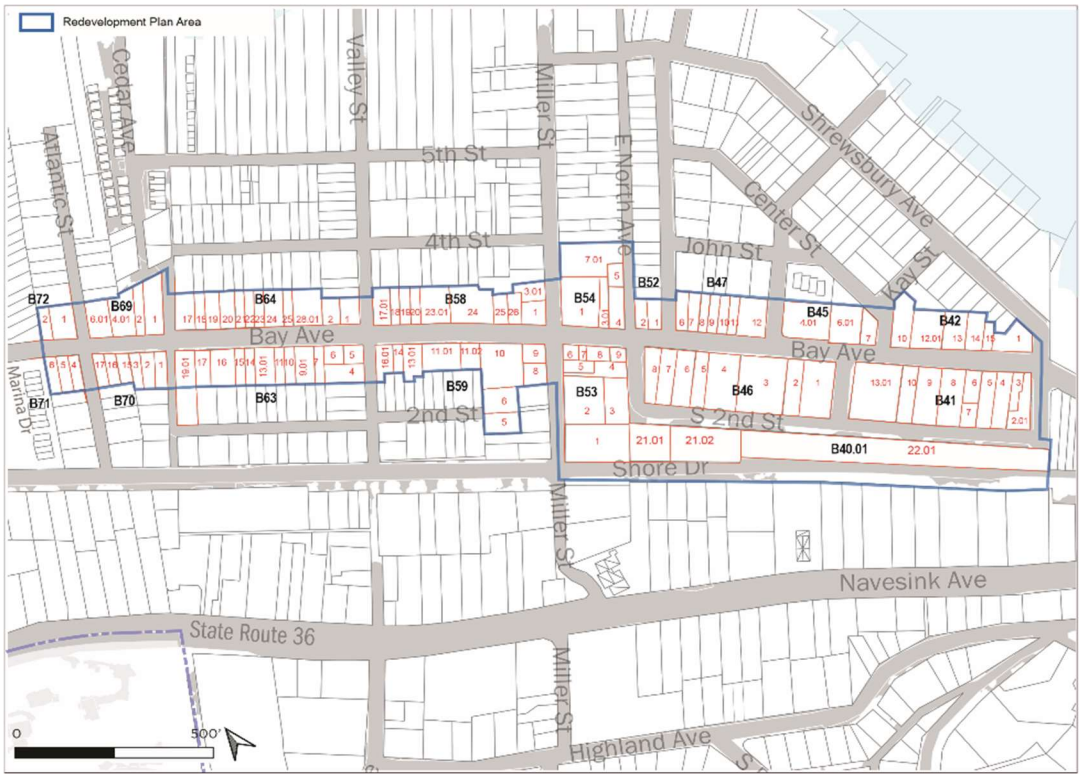

FIGURE 3B: REDEVELOPMENT AREA TAX LOTS EASTERN SECTION
PHILLIPS PREISS GRYGIEL LEHENY HUGHES LLC 2021

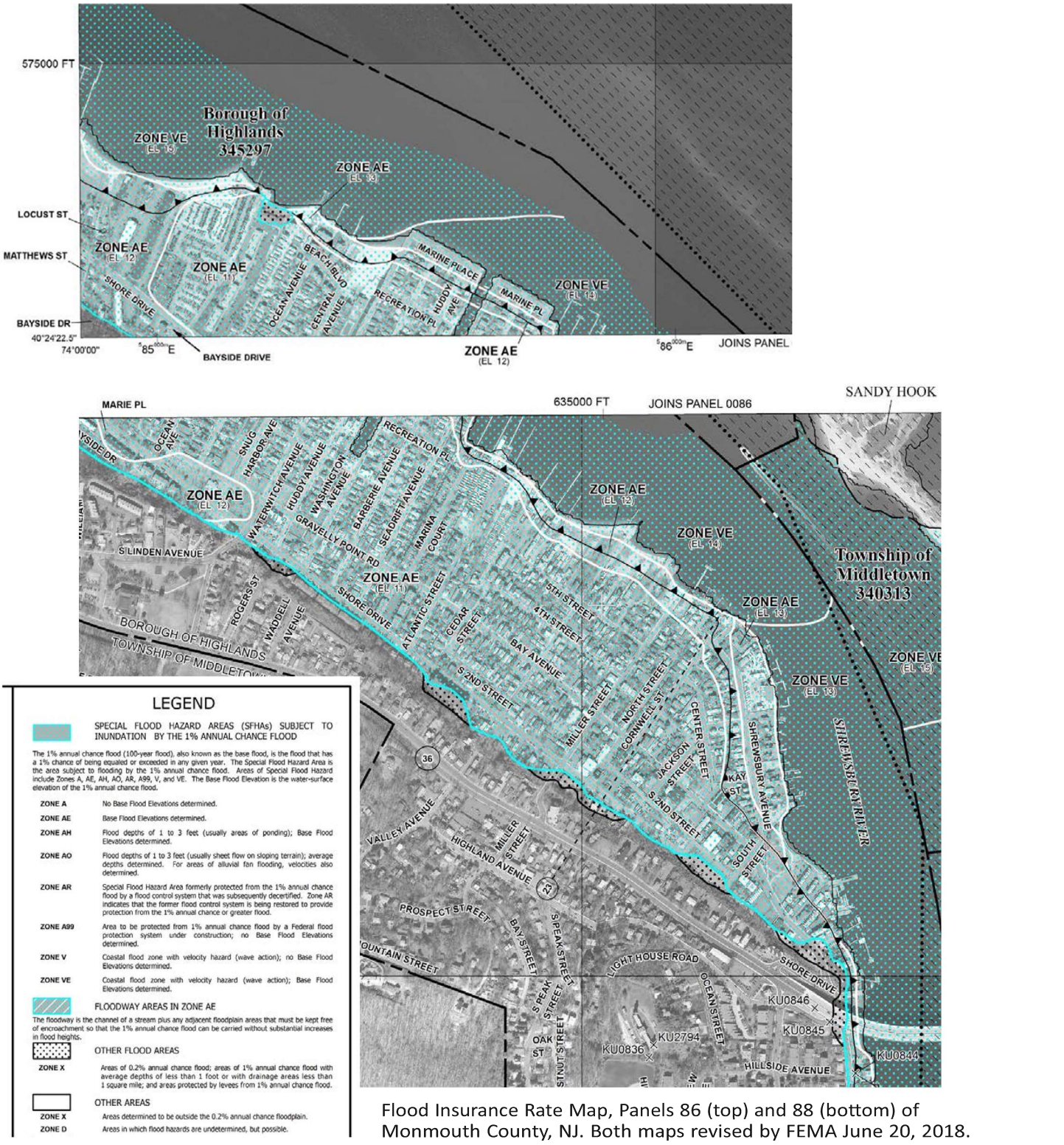

Flood Insurance Rate Map, Panels 86 (top) and 88 (bottom) of Monmouth County, NJ. Both maps revised by FEMA June 20, 2018.

FIGURE 4: FLOOD INSURANCE RATE MAP FOR HIGHLANDS

III. VISION, GOALS AND RELATIONSHIP TO LOCAL OBJECTIVES

A. Vision

This Redevelopment Plan aims for a vision of downtown Highlands that acknowledges and works with the constraints of its location within the Flood Hazard Area. The overall vision for the Redevelopment Area is a vibrant, walkable downtown along the Bay Avenue corridor and adjoining areas that includes a mix of old and new commercial and residential uses; additional apartments, stores, services, and attractions; improved parks and public facilities; and stronger connections to the broader community and the Shrewsbury River. Building and site designs will be consistent with Highlands' identity as a waterfront, historic small town, yet allow for a variety of architectural styles and building types. Retail and other active uses will be required on the ground floor, where feasible, or otherwise on a floor raised above the flood elevation. In either case, guidelines are provided to ensure that retail businesses, apartments, and other uses will have a strong connection to the sidewalk. Streets, sidewalks and public spaces will be more inviting and attractive as a result of public and private investments in the Redevelopment Area.

B. Redevelopment Plan Goals

The specific goals and objectives of the Redevelopment Plan are as follows:

1) Provide regulations for the reuse of buildings and the appropriate redevelopment of properties in the Redevelopment Area with a mix of residential and nonresidential land uses that support the Borough's planning and economic development objectives.
2) Address flooding through building and site design that elevates critical areas above flood waters and increases use of green infrastructure.
3) Require building and site design that is aesthetically attractive, relates to Highlands' existing character, and incorporates sustainability measures.
4) Provide regulations on specific building design elements such as facade transparency, location of the front door and parking access, and building massing and articulation, to ensure that buildings are best configured for a pedestrian-friendly streetscape.
5) Improve pedestrian safety and comfort in the Redevelopment Area through a program to increase effective sidewalk width through deeper front setbacks and landscaping.
6) Provide adequate vehicle and bicycle parking, loading and access for uses in the Redevelopment Area, including flexible shared-use public parking Provide design guidelines to downplay the visibility of off-street parking.
7) Provide additional open space, seating, and gathering areas, and attractions within the Redevelopment Area.
8) Make development in the CBD more financially feasible by redefining, or in some cases removing, onerous zoning requirements such as floor area ratio, building coverage and height, and parking ratios, and by providing more flexible standards.
9) Emphasize major Gateways into downtown Highlands.

C. Relationship to Master Plan

This Redevelopment Plan is consistent with the goals and objectives of the master planning efforts of the Borough of Highlands, as described further below, as it implements various recommendations of the 2004 Master Plan and updates as well other planning studies seeking to strengthen the vitality of the Borough's downtown and other business districts.

The Borough of Highlands has completed several plans and studies which attempt to address an ongoing lack of investment and business activity in the Borough, particularly on the Bay Avenue commercial corridor. These problems were noted prior to the destruction brought about by Superstorm Sandy but were exacerbated after the storm. The Borough has recommended a series of strategies to revitalize the Bay Area commercial corridor in recent years, several of which have been implemented. A previously untapped recommendation is to investigate the designation of eligible properties as areas in need of redevelopment to encourage a rebirth of the commercial corridor.

The Borough of Highlands' most recent comprehensive Master Plan was adopted in 2004 (the **"2004 Master Plan"**). To promote economic development in the downtown, the 2004 Master Plan recommended "investigating the potential for redevelopment within the downtown to address problems, identify opportunities and provide a guide for future reinvestment," and "[a]ssembling sites that can be offered for new business development," among other strategies. At the time of writing the 2004 Master Plan, the Redevelopment Area roughly corresponded to the boundaries of the B-2 Central Business District, which was intended to "accommodate a higher density concentration of retail, service, office and entertainment uses than other commercial districts in the Borough."

A reexamination of the 2004 plan, along with a land use plan element, was adopted in 2009 (the **"2009 Master Plan Reexamination"**). The 2009 Master Plan Reexamination recommended several changes to the Borough's Development Regulations for the B-1 Neighborhood Business District and the B-2 Central Business District, which generally comprised the east and west ends of Bay Avenue and Shore Drive. The recommended changes related to flooding, parking, permitted uses, bulk requirements, and design to advance the Borough's goal to "[s]trengthen commercial districts, especially the Bay Avenue Central Business District."

The current Master Plan document consists of a reexamination report and amendments, which were adopted by the Borough's Land Use Board on December 27, 2016 (the **"2016 Master Plan Update"**). The 2016 Master Plan Update "places special emphasis on facilitating recovery from Superstorm Sandy's impacts, as well as promoting resiliency to future storm impacts and other potential natural hazards." The plan describes the impact of Superstorm Sandy on the Borough:

Superstorm Sandy struck the coast of New Jersey on October 29, 2012, and caused extensive damage to the Borough of Highlands from both storm surge and wind damage. Approximately 1,250 homes within the Borough were damaged or destroyed as well as over 60% of all Borough businesses. All of the Borough's sewage pump stations went offline due to floodwater inundation and/or power system failure. Trees and power lines throughout the Borough fell, in many cases damaging buildings and homes. (pp. 23)

A **2014 Strategic Recovery Planning Report** further noted that "14 downtown restaurants were destroyed, of these, six remain closed." The 2016 Master Plan Update addressed the lack of business investment and activity in the downtown, stating that this "ongoing concern… was only exacerbated by the impacts of Superstorm Sandy."

The **2016 Master Plan Update** contains significant discussion about the Redevelopment Area. In particular, it recommended elimination of the B-1 and B-2 districts and overlay zones, and establishment of a unified Central Business District (CBD) zone "to better accommodate the desired uses for the downtown area [and to] minimize nonconformities and reduce the number of variances that may be required to encourage redevelopment in underutilized lots and areas damaged by Superstorm Sandy or that may be damaged in future storm events." The 2016 Master Plan Update recommended that the new CBD Zone be governed by a form-based code to "ensure all redevelopment occurs in a manner that is consistent with the image and character of the Borough." The 2016 Master Plan Update assured consistency with past plans, noting that "many of the recommendations from the 2009 Report will be integrated into the new zone district." It recommended that the Borough should encourage downtown building design and streetscape features "that promotes and emphasizes the nautical, seaside, small town nature of Highlands." In addition to the creation of a new CBD Zone, the 2016 Master Plan Update recommended allowing parking as a conditional use in business districts outside of the waterfront to encourage "more opportunities for innovative parking arrangements." The plan also recommended that residential uses be permitted on all floors above the ground level in mixed-use buildings. In terms of redevelopment, the 2016 Master Plan Update recommended that "[r]edevelopment studies should include the waterfront, downtown neighborhoods, and the Miller Street corridor."

The Borough amended its Development Regulations to remove reference to the B-1 and B-2 districts and overlays, create reference to the CBD Zone, and update permitted uses in the zone, including allowing parking as a permitted conditional use in the CBD Zone (see **Ordinance 18-01**, adopted in February of 2018, and Ordinance 18-06, adopted in May of 2018). No new regulations were adopted related to permitting residential uses on the upper floors of mixed-use buildings.

The most recent **Zoning Map** was adopted by Ordinance 18-22 in December of 2018, which established the Central Business District (CBD) zone and demarcated it "along Bay Avenue from South Street to the VFW and along Miller Street from Bay Avenue to the Waterfront to replace current existing zoning and overlay districts; with the exception of the existing Multi-Family Zone District located along Marina Bay Court." The Redevelopment Area is entirely within the CBD Zone.

Since the 2016 Master Plan Update, area in need of redevelopment investigations and plans were adopted for the Captain's Cove Marina and the Shadow Lawn Mobile Home Park, in 2018. No area in need of redevelopment investigations have been conducted for areas within the CBD Zone until the investigation of the Redevelopment Area described herein.

A full list of the 2016 Master Plan Update Goals & Objectives related to commercial land uses and economic development/redevelopment can be found in the publicly-available 2016 Master Plan Update.

D. Relationship to Local Objectives

This Redevelopment Plan sets forth definite local objectives as to appropriate land uses, density of population, and improved traffic and public transportation, public utilities, recreational and community facilities and other public improvements. In particular, the Redevelopment Plan provides development regulations that regulate development intensity and residential density, allowing for a range of land uses. The Redevelopment Plan encourages reuse of buildings and new construction, in tandem with upgrading of existing infrastructure and community facilities.

Beyond the Master Plan-related studies mentioned earlier, a number of other plans and studies have been prepared for the Redevelopment Area, including:

CENTRAL BUSINESS DISTRICT DESIGN MANUAL, 1995

- The Borough's Highlands CBD Design Manual, Neighborhood Preservation Program (the "Design Manual") was approved in 1995. It is primarily focused on design changes and improvements to historic buildings and retail storefronts & signage. The Design Manual is very detailed in terms of specific building components such as doors, windows, cladding, and cornices, and leans towards traditional materials and architectural styles. However, because it was written before Superstorm Sandy and before flood control regulations became more onerous, it is not well suited to alone guide anticipated new development in the CBD. For new construction and renovations to existing buildings, this Redevelopment Plan supersedes the older Design Manual. Applicants may choose to seek guidance from the Design Manual as well, but where a conflict occurs, this Redevelopment Plan shall govern.

INTRABOROUGH BICYCLE PLAN, JUNE 2011

HIGHLANDS RECOVERY PLAN, 2013

RUTGERS BLOUSTEIN SCHOOL STUDIO REPORT, SPRING 2014

GETTING TO RESILIENCE" RECOMMENDATIONS REPORT, JUNE 2014

STRATEGIC RECOVERY PLANNING REPORT, SEPTEMBER 2014

- This report identified 13 priority actions that are "'most urgently needed to improve public safety, increase resistance to damage from future storms, and stimulate economic recovery' (NJ DCA)." Of relevance to redevelopment of the Redevelopment Area, priority action #9 was to, "[u]ndertake redevelopment study(ies) and prepare plan(s) for areas determined to be in need of redevelopment. Previous plans have recommended redevelopment efforts in several areas of the borough, including the waterfront and downtown neighborhoods. Moreover, there have also been recommendations to… elevat[e] buildings in the downtown area. All of these recommendations could be reviewed and, if feasible and acceptable, accomplished through the redevelopment planning process."
- In addition, priority area #11 stated, "The [Getting to Resilience (GTR)] Report… recommends that the Borough's plans (including the Master Plan and any redevelopment plan) include explicit references and recommendations related to resiliency."

COASTAL STORM RISK MANAGEMENT PRESENTATION/BRIEFING, MARCH 2017

CAPITAL IMPROVEMENT PROGRAM FOR 2017

STORMWATER POLLUTION PREVENTION PLAN, APRIL 2018

FINAL INTEGRATED FEASIBILITY REPORT AND ENVIRONMENTAL ASSESSMENT, RARITAN BAY AND SANDY HOOK BAY, HIGHLANDS, NEW JERSEY, COASTAL STORM RISK MANAGEMENT, MAY 2020

- This document by the U.S. Army Corps of Engineers assesses the feasibility and environmental impact of a series of intervention options to reduce flood risk between the study period of 2026 to 2076.

E. Relationship to Highlands Zoning Ordinance

The Redevelopment Area is located within, and is defined by the boundaries of, the Central Business District (CBD) Zone. The boundaries of the CBD Zone and adjacent zoning districts in the Borough are shown on the Zoning Map adopted in December of 2018.

This Redevelopment Plan supersedes the Zoning and Land Use Regulations of the Borough of Highlands in Chapter 21 of the Borough's Revised General Ordinances (the "Zoning Ordinance"). Final adoption of this Redevelopment Plan by the Mayor and Council shall be considered an amendment of the Borough of Highlands Zoning Map.

F. Relationship to the Uniform Construction Code

Notwithstanding allowances provided for in the Central Business District Redevelopment Area, all construction shall comply with the Uniform Construction Code (UCC) (N.J.A.C. 5:23). Construction not requiring a construction permit or inspections, work performed pursuant to N.J.A.C. 5:23-2.7 (Ordinary Maintenance), or other construction not under the jurisdiction of the UCC, such as manufacturing, production, and process equipment, as defined in N.J.A.C. 5:23-1.4, shall comply with Section V – Floodplain Requirements, of the Central Business District Redevelopment Plan.

G. Definitions and Terminology

The definitions set forth in the Zoning Ordinance shall apply to this Redevelopment Plan.

As used in this Redevelopment Plan, the following terms shall have the meanings indicated:

- **"BFE+1"** shall mean Base Flood Elevation plus one foot. "Base Flood Elevation" is defined in the Highlands Zoning and Land Use Regulations.
- **"Body piercing, tattoo and skin art studio"** shall mean any establishment where a body piercing and/or tattoo artist conducts the business of piercing the skin or other parts of the body.
- **"Cottage Food Preparation Services and Sales"** shall mean the preparation and sale of home-made non-Time/Temperature Control for Safety (non-TCS) food products. All cottage food operators shall be required to obtain a cottage food operator (home baker) permit from the State of New Jersey prior to the sale of any food products and shall comply with all operating standards required by the New Jersey Department of Health.

- **"Food Manufacturing"** shall mean the process of converting raw agricultural materials into consumable food products, including the cleaning, processing, packaging, distribution, and sale of food items.
- **"Land Use Board"** shall mean the Borough of Highlands Land Use Board.
- **"Mayor and Council"** shall mean the governing body of the Borough of Highlands.
- **"Special Flood Hazard Area"** shall mean the areas of special flood hazard for the Borough of Highlands, Community No. 345297, which pursuant to Chapter 21 Zoning & Land Use Regulations Section 21-109 through 21-127 Floodplain Management Regulations of the Zoning Ordinance are identified and defined on the following documents prepared by the Federal Emergency Management Agency:
    - A scientific and engineering report "Flood Insurance Study, Monmouth County, New Jersey (All Jurisdictions)" dated June 15, 2022.
- **"Substantial Improvement"** shall mean any improvement where the costs of repairs or renovations is equal to fifty (50%) percent or more of the market value of the structure as determined by the Flood Plain Administrator.
- **"Townhouse"** shall mean a "One-family Attached Dwelling" as defined in the Zoning Ordinance (i.e. a one-family dwelling attached to two (2) or more one-family dwellings by common vertical walls),
- **"Two-family dwelling"** shall mean "a building designed or used exclusively for occupancy by two (2) families," as defined in the Zoning Ordinance.
- **"Multi-family dwelling"** shall mean any building or part thereof containing three or more dwelling units, as defined in the Zoning Ordinance.
- **"Zoning Map"** shall mean a document entitled "Zoning Map, Highlands Borough, New Jersey" dated 2018, as may be periodically amended.
- Except as otherwise provided herein, words not defined above or in this document that appear in this Redevelopment Plan shall be interpreted in accordance with the definitions in the Zoning Ordinance as set forth in Section 21-8: "Definitions." If a term used in this Redevelopment Plan is not defined in the Zoning Ordinance, the definition in the Municipal Land Use Law (the "MLUL"), N.J.S.A. 40:55D-1 et seq., or the LRHL shall apply.

Throughout this Redevelopment Plan, a conscious distinction is made in the regulations between "shall" and "should." "Shall" or "must" means that a developer is required to comply with the specific regulation, without any deviations. "Should" means that a developer is encouraged to comply but is not required to do so.

IV. GENERAL RECOMMENDATIONS

Chapters V through IX of this Redevelopment Plan provide specific regulations for land uses and other development regulations as are typically included in a redevelopment plan. This chapter provides additional recommendations for the Redevelopment Area based on input from survey respondents, developers, the Borough, and others.

A. Design

- **Implement building and site design to mitigate flooding impacts and improve stormwater management.** Given the Redevelopment Area's location and history, ensuring that new development and renovations can withstand flood events will help attract investment and types of uses desired by the community.
- **Incorporate sustainability measures.** Green design provides benefits to business and property owners, as well as to the environment.
- **Make downtown more physically attractive and welcoming.** Survey respondents and community meeting attendees cited physical improvements as an important part of this Redevelopment Plan. Improvements to the streetscape and lighting, additional trees and other plantings, murals and burying utility wires were among the suggestions for upgrading the appearance of the Central Business District.
- **Preserve historic character and identity.** At the same time, as changes are made to the area there is still a strong desire to maintain and enhance Highlands' identity as a waterfront, historic small town.
- **Provide Gateway treatments at important intersections.** Providing streetscape features such as paver crosswalks, signage, public art, and buildings with prominent design elements would reinforce the Central Business District's identity as a distinct place.
- **Focus on key sites with the potential to spur additional redevelopment.** There are a number of properties within the Redevelopment Area that are adequate in size or possess other factors that make them appropriate for larger-scale development and have the ability to positively influence nearby areas.

B. Coordination

- **Improve connections to the Shrewsbury River, Sandy Hook Bay, the Twin Lights and other nearby attractions.** While the waterfront is located outside the Redevelopment Area, Highlands' setting on the Shrewsbury River and Sandy Hook Bay at the northern tip of the Jersey Shore is essential to its character. Nearby beaches and the Twin Lights also bring large numbers of visitors to the area who represent a significant potential market for shops, services and eateries in the Central Business District.
- **Align redevelopment efforts in the Central Business District with other redevelopment and planning initiatives.** There are opportunities for synergy between projects in Highlands such as the Captain's Cove and Shadow Lawn redevelopments, improved waterfront access, upgrades to utility infrastructure and potential "Transit Village" designation.

C. Uses

- **Continue to permit and support a range of commercial uses and attractions.** Highlands has a variety of existing businesses, but would benefit from additional complementary uses, including businesses not currently located in the Redevelopment Area, attractions, arts, culture and entertainment.
- **Provide housing for a diverse population.** New and renovated residential units should include a range of sizes, types and prices.

D. Circulation

- **Incorporate "Complete Streets" principles in street and site design.** Private and governmental actions implementing this Redevelopment Plan should consider the needs of pedestrians, bicyclists, public transit users, and motorists during design and throughout all stages of any new roadway or streetscape project, in order to make streets safer for all users.
- **Promote pedestrian activity and bicycle usage.** Taking the above recommendation one step further, building and site design should consider the existing prevalence of non-motorized transportation in the Redevelopment Area and environs and support walking and bicycling.
- **Utilize creative design techniques to provide adequate parking.** While parking is necessary to support most uses, addressing parking requirements onsite is not feasible or necessary for all uses. Allowing shared parking among uses, providing additional publicly available parking, and allowing payment in lieu of providing parking are some of the measures that should be considered.

V. FLOOD REQUIREMENTS

All flood requirements for the Central Business District Redevelopment Area shall adhere to the standards, definitions, and regulations set forth in Part VII (Flood Damage Prevention) Article XXIV (Floodplain Management Regulations) of Chapter 21 (Zoning and Land Use Regulations) of the Borough of Highland's Code, as may be amended.

VI. LAND USE REGULATIONS

A. Introduction

This section provides regulations for future land uses within the Redevelopment Area. The designations are based on analysis of existing land uses, suitability for new uses and the availability of redevelopable land. The proposed land uses recognize existing conditions within the Redevelopment Area, while in some instances proposing changes in use to further the goals and objectives of this Redevelopment Plan.

It should be noted that uses on properties for which the zoning designation is changed may continue as legal non-conforming uses as a matter of law, regardless of any change in the zoning designation. It is only when the property owner seeks to expand the existing use or change the existing use to another use that the new zoning standards will apply.

B. Gateway Parcels

Special Gateway treatments are encouraged at certain intersections to reinforce the Central Business District's identity as a distinct place and create a sense of entry to the Borough. The three "Gateways" include:

- Waterwitch Avenue at Huddy Park, between Bay Avenue and Shore Drive;
- Miller Street between Shore and Bay; and

- The eastern end of Bay Avenue near the Veteran's Memorial Park.

These Gateway locations correspond to the intersections identified for special treatment in the 1995 Highlands CBD Design Manual. **Table 1** shows the designated Gateway parcels.

In order to create a sense of arrival at these locations, this Redevelopment Plan encourages architectural massing to create a focal point for new construction in the Gateway parcels. Such focal point elements should be located along Bay Avenue; or at the corner of Bay and Waterwitch Avenue or Bay and Miller Street; where a parcel does not adjoin Bay Avenue, the focal element should be along Waterwitch Avenue or Miller Street.

The eastern end of Bay Avenue near Veteran's Memorial Park		
BLOCK	LOT	ADDRESS
41	2.01	57 BAY AVENUE
42	1	60 BAY AVENUE
Miller Street between Shore and Bay		
BLOCK	LOT	ADDRESS
53	1	MILLER ST
53	2	65 MILLER STREET
53	5	63 MILLER STREET
53	6	BAY AVE & MILLER ST
58	1	154 BAY AVENUE
58	3.01	50 MILLER STREET
59	8	66 MILLER STREET
59	9	165 BAY AVENUE
Waterwitch Avenue at Huddy Park, between Bay Avenue and Shore Drive		
BLOCK	LOT	ADDRESS
88	3	71 WATERWITCH AVENUE
88	4.01	67-69 WATERWITCH AVENUE
88	5	321 BAY AVENUE
89	13.01	65 WATERWITCH AVENUE
94	1	BAY & WATERWITCH AVE

TABLE 1: GATEWAY PARCELS

Massing Elements

Specifically, Gateway parcel buildings are encouraged to include massing elements that emphasize the Gateway at a corner or along a street corridor, for example: towers, cupolas, bay windows, corner entries, contrasting window or glazing patterns, and/or varied roof heights and shapes.

Active Uses and Deeper Front Setbacks Encouraged

In addition, retail or other non-residential uses are required at the ground level or on an elevated Lowest Floor of buildings in Gateway parcels, and buildings are encouraged to provide deeper front setbacks that are landscaped as plazas.

C. Permitted Principal Uses

- Retail sales and services
- Offices
- Banks and financial institutions
- Eating and drinking establishments
- Bakeries
- Food preparation services
- Food manufacturing given that a portion of the space is dedicated to the sale of the food products that are manufactured on-site.
- Cottage food preparation services and sales
- Microbreweries and distilleries
- Pool halls
- Houses of worship
- Theaters
- Childcare Centers
- Educational uses
- Art, artisan, woodworking, and jewelry making handicraft studios, workshops and galleries
- Health, fitness, dance, music, and martial arts studios
- Municipal uses
- Open space
- Mixed-use developments
- Existing single-family and two-family homes
- Existing multi-family residential
- Multi-family residential located in a mixed-use building where the first floor serves as a non-residential use.
- Wholesale sales and services
- Hotels
- Bed & Breakfasts
- Body Piercing, tattoo, and skin art studios
- Surface parking lots

Permitted Accessory Uses

- Parking in rear, side, and front yard or under building
- Signage
- Any other uses and structures customarily subordinate and incidental to permitted principal uses.

D. Supplemental Use Standards

- Permitted uses below the BFE:
    - Commercial or mixed-used buildings, and non-residential uses, such as office or retail.

        - All newly constructed commercial or mixed-use buildings and non-residential uses having a lower level below the Design Flood Elevation must be designed to have those areas dry flood proofed in accordance with FEMA standards, Highlands Borough Floodplain Management Regulations (Land Use Chapter 21), and the Uniform Construction Code. Areas used as storage, access, or as parking are permitted to be wet floodproofed.
        - All existing commercial or mixed-use buildings and non-residential uses undergoing improvements that result in the property being designated as undergoing a Substantial Improvement, must be designed to have those areas dry flood proofed in accordance with FEMA standards, Highlands Borough Floodplain Management Regulations (Land Use Chapter 21), and the Uniform Construction Code. Areas used as storage, access, or as parking are permitted to be wet floodproofed.
    - Ground level areas below the structure are permitted to be used for outdoor seating, parks, and dining areas, provided the area has permeable surface composed of materials including but not limited to flood mitigating permeable pavers, sand, rain gardens. These areas can be used to create a placemaking promenade as part of the streetscape.
    - Existing residential buildings may remain in place. However, existing residential buildings undergoing improvements that result in the property being designated as undergoing a Substantial Improvement, must comply with FEMA standards, Highlands Borough Floodplain Management Regulations (Land Use Chapter 21), and the Uniform Construction Code.
- Hotels
    - The minimum floor area per unit shall be two hundred fifty (250 square feet).
    - The parking shall adhere to the standards and requirements of **Chapter VIII, Parking and Circulation.**
    - All solid waste containers for storage and pickup shall be centrally located and easily accessible and within a screened enclosure on the street level.
    - All hotel uses shall be provided with adequate fire safety and evacuation provisions and sprinkler systems. Regardless of the number of rooms, such facilities shall be approved by the Municipal Fire Subcode Official and shall incorporate all applicable requirements of the National Fire Protection Association Code and the NJ Uniform Construction Code.
    - Each unit of accommodation shall contain a minimum of a bedroom, and a separate bathroom which affords privacy to a person within the room and is equipped with a toilet, a wash basin and bathtub/shower. Kitchen facilities are prohibited.
    - The first floor area of a hotel, or the first level over on-site parking, may be used for offices, permitted nonresidential uses, coffee shop or restaurant. The first floor area of the hotel structure does not have to be associated or related to the hotel use.
    - The buffer zone between the rear setback of a hotel and adjacent residential uses or districts shall comply with the requirements of the Zoning and Land Use Regulations of the Highlands Ordinance but shall not be less than (10) feet in width.

  - The structure shall not be a “rooming house” or “boarding house” as defined by current New Jersey statute.
  - Once established, a hotel use shall not be converted to a multifamily residential use such as apartments, townhouses, or condominium living arrangements.
- Bed & Breakfasts
  - The parking shall adhere to the standards and requirements of **Chapter VIII, Parking and Circulation.**
  - Landscaped screening or fencing shall be required for any outside areas for guest use in the side or rear yard to provide a buffer to adjacent residential uses.
  - Signage shall be limited to one (1) freestanding sign not to exceed four (4) square feet and one (1) house mounted name sign not to exceed one and one-half (1 ½) square feet.
- Body piercing, tattoo, and skin art studios
  - Tattoo samples shall not be displayed in such a manner as to be visible to the general public outside of the studio.
  - Window displays shall not contain sample artwork or posters that have not been professionally mounted or framed.
  - All establishments must comply with all health requirements of the Borough of Highlands and the Health Department of the State of New Jersey.

VII. BULK REGULATIONS

A. Lot Size

Min. Lot Area: 2,500 Square Feet

Min. Lot Width: 25 Feet

B. Setbacks

Front Setback

For all properties in the CBD zone, a minimum two (2) foot front setback is required. This will help to increase the effective sidewalk width. The required two-foot setback area must be paved with concrete in a similar pattern and material as the public sidewalk.

Where a property is a through lot that adjoins Bay Avenue on one side and another public street on the opposite frontage, Bay Avenue shall be defined as the front street.

Rear Setback

The minimum rear setback is five (5) feet.

Side Setback

No side yard setback is required where a property borders another property that is also located in the CBD Zone, however, if any side yard is to be provided, it shall be at least five (5) feet wide.

Where the side lot line of a property in the CBD Zone directly adjoins a property in a residence zone (that is, not where an intervening public street creates a separation), a minimum side yard of five (5) feet is required, and shall include a buffer as described in existing zoning, Section 21-65.3 Buffers.

C. Coverage

Lot Coverage

Maximum lot coverage is 90 percent.

Building Coverage

Maximum building coverage is 90 percent.

D. Floor Area Ratio

Floor area ratio (FAR): No minimum or maximum FAR is required.

E. Building Height

Definitions

Building height and the related concept of grade plane are defined as follows:

> **Building Height:** The vertical distance as measured from the grade plane to the average height of the highest roof surface. In the case of sloped roofs, the average height is the mid-point between the lowest roof eave of the top floor and the roof ridge. In the case of a building that has multiple roof levels, the highest roof levels must be used to determine the building height. Chimney, elevator equipment and mechanical utility equipment and any associated screening or enclosures may exceed the permitted "building height" by up to ten (10) feet, or up to ten (10%) percent above the permitted building height, whichever is less.
>
> **Grade Plane:** All properties in the Central Business District Redevelopment Area are in the Special Flood Hazard Area. The reference plane shall be the more restrictive of the base flood elevation or advisory base flood elevation, which is known as the Design Flood Elevation, of the flood hazard area plus one (1) foot.

Note that the existing building height definition provides an incentive for pitched roofs because it measures height to the midpoint of a sloping roof, but to the deck level of a flat roof.

In addition to the zoning definition above, this Redevelopment Plan adds a clarification for the CBD: rooftop parapets are permitted to exceed maximum building height by up to four (4) feet.

Height Variations based on Site Grade

The zoning requires that height for all parcels within the Flood Hazard Area – which includes nearly the entire CBD – be measured with respect to the Base Flood Elevation plus one foot ("BFE+1"), which is 12 feet for this area. Because the finished grade of most parcels within the CBD is between 4 and 9 feet elevation, all such parcels will have some "free" building height below the BFE+1 of 12 feet. But the parcels on the lowest-elevation ground will have the most effective available buildable height because there is more height available below the 12-foot BFE that can be used for parking.

HEIGHT EXAMPLES

152 BAY AVENUE, HIGHLANDS

2 stories, retail and apartments.

ESTIMATED TOTAL HEIGHT:
±28' to 32' high from grade to ridgeline / peak of roof.

ESTIMATED ZONING HEIGHT:
±17' to 21' from BFE+1 (based on an illustrative grade of 5 fee elevation, meaning BFE+1 is 7 feet above grade) to the midpoint of the gabled roof.

170 BAY AVENUE, HIGHLANDS

2.5 story single-family over storage level.

ESTIMATED TOTAL HEIGHT:
±32' to 36' high from grade to ridgeline / peak of roof.

ESTIMATED ZONING HEIGHT:
±21' to 24.5' from BFE+1 (based on illustrative grade of 5 feet elevation, meaning BFE+1 is 7 feet above grade) to the midpoint of the gabled roof.

7 HALFMOON COURT, HIGHLANDS (outside CBD)

2-story townhouses over parking level.

ESTIMATED TOTAL HEIGHT:
±32' to 35' from grade to ridgeline / peak of roof.

ESTIMATED ZONING HEIGHT:
±22.5' to 25.5' from BFE+1 (based on an illustrative grade of 5 feet elevation, meaning BFE+1 is 7 feet above grade) to the midpoint of the gabled roof.

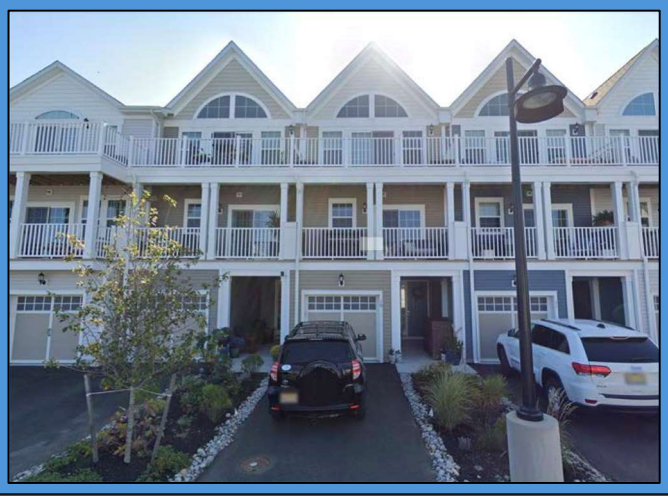

Maximum Height Allowance

A building height of 4 stories / 45 feet is permitted, conditioned upon the 4th floor having a step-back of a minimum of 8 feet and/or where parking is located on the ground floor.

The step-backs are measured relative to the primary facade plane of the floor below, and shall be designed as balconies, porches, or terraces for adjoining living spaces. A roof is permitted over step-back areas, but any such roof shall be designed and massed as secondary to the main roof mass of the building.

Active Uses

Active uses at the ground floor, and to a lesser degree, on an elevated floor, create more pedestrian foot traffic, vibrancy, and visual interest at the sidewalk. Active uses that are permitted include, but are not limited to:

- Restaurants, cafes, retail shops, boutiques, and kiosks, grocery stores, banks, certain types of walk-in service retail, such as hair salons and realtors, and art-related uses such as galleries, studios, and workspaces.
- Shared support spaces for upper floor residential units, such as lobbies and amenity areas such as resident lounges, mail rooms, game rooms, and work-out rooms.

F. Ground Floor Height

- Nonresidential uses: The minimum floor to ceiling (clearance) height for nonresidential uses located on the ground floor shall be 13-feet.

G. Required Open Spaces

Private Open Space

For any building containing residential uses, outdoor living space is required at the rate of fifty (50) square feet per unit; however, no additional open space is required based on the number of bedrooms. Each unit's minimum 50 square feet of outdoor space shall be private to and connected directly to the unit, either adjoining a floor of the unit or connected by a private staircase to the roof or the ground.

This private open space may be provided through any combination of outdoor, open-air spaces at ground level, directly adjacent to the unit and elevated in the form of balconies, decks, porches, and/or in the form of roof top terraces.

The areas provided shall be for the exclusive use of the adjoining residential unit and shall be sufficiently screened or otherwise designed to insure such privacy and exclusive use.

A modern style of covered porch

Front setback open spaces may not be counted as Private Open Spaces, as such spaces are intended to be public or shared communal spaces.

Open spaces must be exterior, out of doors, and open air. Indoor spaces such as resident lounges and gyms do not count as private open space.

Private open space on a roof deck

Publicly Accessible Open Space

Buildings with retail or commercial space are encouraged to provide a plaza or pocket park with room for outdoor dining, café seating, merchandise sales, and/or informal public seating within front setbacks or any street-facing setbacks. Benches, landscape planters, and small ornamental trees and bushes are encouraged in these front areas as well.

VIII. PARKING AND CIRCULATION

A. Vehicular Parking

Maximum Parking Ratios for Residential

- Single-family detached, two-family duplex, and townhouses: follow NJ Residential Site Improvement Standards (RSIS) for single-family, namely 1.5 spaces for a two-bedroom, 2.0 spaces for three-bedroom, and 2.5 spaces for four-bedroom, and 3.0 spaces for five or more bedrooms.
- Multi-family buildings with three (3) or more units: follow RSIS for Midrise Apartments, namely 1.8 spaces for one-bedroom units, 2.0 for two-bedroom units, and 2.1 for three-bedroom units.
- Residential uses are permitted to count first any available on-street parking spaces before determining the number of parking spaces that must be provided off-street.
- If the parking standards within this section differ from the most current NJ Residential Site Improvement Standards (RSIS), the RSIS standards shall prevail.

Minimum Parking Ratios for Non-Residential

- Each hotel shall provide parking at a ratio of one (1) space per unit of accommodation. The parking may be provided on site or within one thousand (1,000 feet) of the hotel property.
    - The hotel use may provide some of the required parking on another parcel, which may or may not be contiguous to the hotel parcel. In addition, the applicant shall provide written assurances acceptable to the appropriate Board that the parking will remain available in the future. Such assurance shall be in the form of lease agreements or deed restrictions which will be reviewed by the attorney of the board of jurisdiction. The parking assurances may be linked to a municipal mercantile license.
- For Bed and Breakfasts, parking shall be provided at a rate of one (1) space for each guest room and two (2) spaces for the owner/operator. If parking is provided off site, the construction of the Bed & Breakfast will be based on the continued availability of that parking. Should the required number of off-site parking spaces be reduced or eliminated, the number

of guest rooms shall be reduced or the bed and breakfast discontinued in accordance with the available parking.
    - The required parking shall be off-street and may be provided either on-site or at a designated off-site location solely for this use.
- Bars and restaurants shall provide 1 space per 4 seats or stools.
- For other non-residential uses: The first 1,000 square feet of non-residential space shall be exempted from parking requirements. After that, parking ratios shall be 1 space per 600 square feet of non-residential space. Where a building contains more than one non-residential space or storefront, the areas of each space shall be combined before deducting the 1,000 SF exemption, and the remaining space shall be used to determine required parking for all the non-residential areas as a whole. In other words, the 1,000 SF exemption may only be used once per building.
- Non-residential uses are now also permitted to first count any available and adjacent on-street parking spaces before determining the number of off-street parking spaces to be provided.
- If the required non-residential parking supply cannot be provided onsite, the developer is required to pay an annual fee to the Highlands Capital Improvement Fund based on the number of deficient spaces so that the Borough may provide the parking at one of its municipal lots.
- Where a shared parking approach for uses with different peak demand periods could result in a total overall lower parking requirement, the Borough may allow the construction of the lesser number of spaces, provided the site plan shows how the additional space will be provided if necessary.

PARKING ACCESS

Where possible on corner lots and through lots, structured parking and open parking areas under buildings should not be accessed from Bay Avenue, but rather should be accessed from the rear of the lot or from a side street. Such access allows for a more inviting and safer street frontage, without the interruption of driveways or parking areas located underneath buildings.

The permitted number and width of driveways and curb cuts from a public street are detailed in existing zoning, **Section 21-65.5, Driveways**. In addition, in the CBD, continuous curb cuts (such as lead to a row of pull-in parking spaces) are prohibited.

Parking Design and Buffering

Surface Parking Lots

Nonresidential surface parking lots shall be screened through landscaping and /or fencing as approved by the Land Use Board.

A low wall and a simple chain fencing delineate a parking lot

Exposed Parking Level on Ground Floor of a Building

Where the ground-level of a building, regardless of the building use, includes parking spaces that are exposed along any street frontage, one or more of the following improvements shall be included to soften the view of the parked cars. Any portion of street-facing building frontage that remains open, with the exception of driveways and parking entries, shall be buffered with a low masonry wall of one to three feet in height, a decorative fence of three to four feet in height, and/or a landscaping planter bed. Plantings, if used, should include a variety of species and should include those that maintain shape and texture through the winter, such as evergreens and tall native grasses. Alternately, the entire parking facade (except for driveways and parking entries) may be covered with a wood or PVC lattice screen, set within or behind regularly-spaced piers or columns.

Solid Walls around Parking Level on Ground Floor of a Building

Where all or a portion of a ground floor's solid facade wall faces a public street, it is important to break down the scale of the facade and provide some transparency and connection to the street.

Accordingly, any portion of a ground floor's solid facade wall that faces a public street shall include the following measures. Windows and/ or ventilation screens or grates should be provided at least every 20 feet.

High clerestory windows with translucent or opaque glazing are suggested for maximizing privacy while creating a sense of visual permeability in the parking facade. Alternately, metal grilles or screens may be used in windows to allow inflow and outflow of floodwaters. Large expanses of walls should be broken down in scale, for example with a thicker masonry base, accent trim, and/or contrasting textures or brickwork.

B. Bicycle Parking

For buildings containing more than three (3) residential units, indoor bicycle parking racks shall be provided within a secure, access-controlled room inside each building or within a separate area within the parking area, at a minimum ratio of one indoor bicycle parking space for every 4 residential units. At least 15 square feet of area shall be provided for each bicycle space to account for maneuvering room around handlebars and pedals; double-height racks to stack bicycles are permitted

Attractive outdoor bicycle parking racks

in order to meet this requirement. Bicycle racks must be securely anchored and designed to allow the bicycle frame and one wheel to be secured.

Outdoor bicycle racks shall also be provided near the primary pedestrian entry, as follows. A minimum ratio of one (1) outdoor bicycle parking space shall be provided for every eight (8) residential units, as well as one (1) outdoor bicycle space for every 2,000 square feet of retail or commercial space. Bicycle racks must be securely anchored and designed to allow the bicycle frame and one wheel to be secured.

IX. DESIGN STANDARDS

A. Building Design

BUILDING ORIENTATION AND ACCESS

For parcels with frontage along Bay Avenue, the front facade shall face Bay Avenue. For parcels not adjoining Bay Avenue, but located along Shore Drive, the front facade shall face Shore Drive. For parcels not located along either of these streets, the orientation of the front facade is flexible.

The primary entry door to ground-floor retail or commercial uses shall be located within the front facade.

In mixed-use buildings, residential entry doors may be located on a side facade as long as the entry door to the other active use is located in the front facade.

FACADE TRANSPARENCY

All glazed windows and doors below the Base Flood Elevation must comply with FEMA Technical Bulletin 2 (TB2), Highlands Borough Floodplain Management Regulations (Land Use Chapter 21), and the Uniform Construction Code.

Retail / Commercial Uses

At least 50 percent of the front facade area of retail and commercial spaces (whether ground floor or elevated) shall have large storefront-style plate glass windows and fully glazed doors, in order to maximize visibility into the space. At a side street, the side frontage (whether ground floor or elevated) shall include windows comprising at least 50 percent of that floor's facade area for at least the front ten (10) feet of the space.

Decorative Roll-up or fold-away windows or walls are encouraged for front facades of restaurants, cafés, and other retail businesses in order to allow the interior space to be more open and well-ventilated during good weather. Seating for outdoor dining is encouraged as well.

Residential Uses in mixed use buildings

The primary entry door for residential uses shall include a glazed area, such as a row of glass lites or a large panel of glass. To further accentuate the door, side lite windows and wall-mounted sconce lighting are encouraged.

Residential uses on upper floors shall include windows comprising at least 25 percent of the facade area along all street-facing facades.

MASSING AND ARTICULATION

Vertical Bays

The following applies to all new buildings exceeding 40 feet in length or width. Such buildings shall be broken down along all street-facing facades into a series of vertical bays each not to exceed 30 feet in width. Each bay shall be defined by a physical change in plane of at least one (1) foot relative to adjacent bays, such as is provided by a recessed or projecting bay, stacked balconies or porches, or stacked projecting bay windows, Differentiation based only on facade colors or materials is insufficient to define a bay.

Roof Form

Sloping roofs with deep eaves or overhangs are the preferred roof forms and are incentivized by the definition of where building height is measured. Cross-gables and dormers are encouraged on sloping roofs. Any areas of flat roof should receive horizontal emphasis such as deep overhangs, parapets, and/or cornices. On larger buildings, the roofline shape should vary in relation to the massing of vertical bays below.

Articulation

Building facades shall be articulated and enlivened with elements such as bay windows, balconies, piers, corner boards, overhangs, awnings or canopies, porches, windows and varied materials and textures, so as to avoid large uninterrupted areas of blank walls. Shutters, if used, shall be large enough to actually cover the window they frame, even if they will remain fixed in place.

On buildings with ground-floor retail or commercial uses, architectural accents shall be used to highlight the ground floor, such as: a cornice band above the storefront floor, flat sheltering canopies over entryways and large expanses of windows, wall-mounted sconce or gooseneck lighting, decorative tilework, and attractive signage.

Green Building Design

On southern exposures, buildings shall include projecting overhangs, flat canopies, brise-soleils / sunshades and the like to shield against solar gain, provide shade, and increase building energy efficiency.

Roof coverings painted in highly-reflective, light colors are encouraged. Green roofs are encouraged as a means to help detain precipitation and provide insulation to floors below.

ARCHITECTURAL STYLE AND MATERIALS

Building Styles

A broad design palette is permitted, provided that buildings have high quality design. Buildings are encouraged to make reference to prevailing historic styles and vernacular materials of the Jersey Shore, such as (but not limited to) shingle cottages, “gingerbread” trim, generous front porches (often on all levels of a building), and gambrel or hipped roof forms with dormers. However, references to historical motifs should be used in moderation and only where they form a cohesive design.

Façade Materials

Preferred façade materials include fiber cement and wood siding in horizontal clapboards or shingles, board and batten siding, brick, cultivated stone, or other masonry compliant with FEMA Technical Bulletin 2 (TB2). Stucco and EIFS are prohibited in the floodplain. Materials used below BFE+1 must meet FEMA flood damage-resistant material requirements. Materials, detailing, and articulation should be consistent along all building facades.

Application of Materials

No more than three different materials should be used as primary materials within each building bay. Within the chosen primary materials, variation in color, texture, and/or pattern may be employed to create further distinctions. Changes in materials, colors, texture, or pattern that occur across a horizontal line should be marked by a change in plane, dimensional band or belt cornice, a recessed channel, or similar horizontal feature. Materials should be extended around corners and extensions to a logical vertical break in plane, in order to avoid a "pasted on" appearance. The level of materials, detailing, and articulation should be consistent along all building facades, not just street-facing facades.

B. Public Improvements

This section discusses possible improvements that the Borough of Highlands could make on its public rights-of-way to help improve the pedestrian environment.

Gateway Treatments

Within the public right-of-way, special Gateway treatments at important intersections could help to reinforce the Central Business District's identity as a distinct place and create a sense of entry to the Borough. Refer to the **Gateway Parcels** section of this plan for a description of the three designated Gateway areas. It is recommended that the Borough improve the public streetscape in these areas with such features as unit-paver pedestrian crosswalks at all sides of major intersections, bulb-outs at the ends of parking lanes to shorten pedestrian crossing distances, "Welcome to downtown Highlands" signage, public art, rain gardens, and landscaped sidewalk plantings and accent street trees.

Street Landscaping and Open Spaces

Downtown Highlands has few street trees. In part this is due to the very narrow sidewalk widths and the need to provide adequate clear walking paths for pedestrians. Street trees need generous planting volume to grow and thrive. In addition, periodic saltwater flooding may make for an inhospitable tree environment. Some towns with narrow sidewalks plant street trees in curbed planting areas within the parking lane between designated parking spots. Similarly, Highlands could plant street trees in the parking lane between driveway entry curb cuts. It should be noted, however, that trees in the parking lane make it more difficult to street-sweep and plow snow.

The landscaping in these front setback areas should include large street trees or smaller ornamental trees, either of which would contribute greatly to the appeal of Bay Avenue for pedestrians. In addition, the front setbacks will create an effectively wider sidewalk width, making the walking environment more spacious and comfortable.

X. REDEVELOPMENT ACTIONS

This Redevelopment Plan provides for several actions in support of the overall Redevelopment Plan goals and objectives, as follows:

A. Appointment of Designated Redeveloper

In order to redevelop a property within the Redevelopment Area, an individual or entity shall first be designated as a Redeveloper of the property by the Council of the Borough of Highlands (the "Governing Body") in accordance with the LRHL. Designation of a Redeveloper by the Governing Body shall be subject to the execution of a Redevelopment Agreement as negotiated between the Redeveloper and the Borough setting forth the scope of the project, terms, obligations and conditions of the project/parties. Properties within the Redevelopment Area which are developed with one- and two-family houses do not require the property owner/developer to be designated as a Redeveloper by the Governing Body, but such properties are subject to the requirements of this Redevelopment Plan.

Potential redevelopers will be required to submit to the Borough for review and approval prior to the designation as a redeveloper at a minimum:

- Financial responsibility and capability;
- Estimated development cost;
- Estimated time schedule;
- Conceptual site plans including visual plans and elevations at a minimum;
    - Building elevations should indicate the proposed building/flood resistant materials to be constructed at all of the building's facades.
    - The concept plan should include a site specific massing diagram which includes the mix of uses proposed for the project along with the size of the proposed program components.
- Fiscal impact analysis.

The Borough may, at any time, entertain an unsolicited proposal from a prospective redeveloper or property owner for redevelopment of a redevelopment project. The Borough may also issue an RFQ/RFP to solicit interest in a project. After review and evaluation of all proposals by the Borough, the Governing Body may select a redeveloper and proceed to negotiate a Redevelopment Agreement. The Governing Body may also reject all proposals.

B. Review Process

The review process for all redevelopment projects shall consist of the following steps:

Review of Proposed Development Plan: An application for redevelopment shall first be reviewed by the Borough staff and submitted to the Borough Planner for a consistency determination which shall include, but not be limited to, a review of the project to determine the general compliance with the

proposed development and uses of the parcel and related standards in the Redevelopment Plan, the aesthetics of the project and the project's coordination with other existing projects and with proposed development and uses.

After a favorable consistency review, a redevelopment agreement with the prospective redeveloper shall be negotiated. The Governing Body may then adopt a resolution designating the redeveloper as the "Redeveloper" for a specific portion of the Redevelopment Area and authorizing the execution of the redevelopment agreement. No application may proceed to the Land Use Board for preliminary/final site plan approval prior to the designation of a redeveloper and the execution of a Redevelopment Agreement.

C. Properties to Be Acquired

The Redevelopment Area is designated as a "non-condemnation Redevelopment Area"; no properties are currently identified for acquisition by eminent domain for redevelopment purposes.

D. Relocation

Any redeveloper will be required to provide for the temporary and permanent relocation, as necessary, of residents in the project area in accordance with applicable statutes and regulations.

The Redevelopment Area and surrounding areas include a substantial amount of decent, safe and sanitary dwelling units affordable to displaced residents.

F. Duration of Plan

The provisions of this Plan specifying redevelopment of the Redevelopment Area and the requirements and restrictions with respect thereto shall be in effect for a period of 30 years from the date of approval of this plan by the Borough Council.

F. Other Actions

In addition to the actions described above, several other actions may be taken to further the goals of this Plan. These actions may include, but shall not be limited to:

- Demolition of existing structures as necessary to allow for new flood compliant construction and elimination of existing FEMA National Violation Properties that are not eligible for Community Rating System discounts.
- The option to consolidate and/or resubdivide lots to the extent necessary.
- Provisions for utilities and other infrastructure necessary to service and support new development.
- Environmental remediation as necessary to effectuate the Redevelopment Plan.
- Creation and/or vacation of easements as may be necessary for redevelopment.
- Any and all other actions and powers authorized by State law, including, but not limited to, the LRHL.

XI. GENERAL ADMINISTRATIVE REQUIREMENTS

A. Site Plan and Subdivision Review

For any development plan requiring site plan or subdivision approval, prior to commencement of construction, a site plan and/or subdivision for construction of improvements within the Redevelopment Area, prepared in accordance with the requirements of the MLUL, shall be submitted by the applicant for review and approval by the Highlands Land Use Board, unless such approval has previously been granted. One- and two-family homes are specifically exempt from site plan review. Subdivision approval shall also be required for any lot consolidations or mergers.

B. Easements

No building shall be constructed over a public easement in the Redevelopment Area without prior written approval of the Engineer of the Borough of Highlands.

C. Adverse Influences

No use or reuse shall be permitted which, when conducted under proper and adequate conditions and safeguards, will produce corrosive, toxic or noxious fumes, glare, electromagnetic disturbance, radiation, smoke, cinders, odors, dust or waste, undue noise or vibration, or other objectionable features so as to be detrimental to the public health, safety or general welfare.

D. Non-Discrimination Provisions

No covenant, agreement, lease, conveyance, or other instrument shall be affected or executed by the Borough of Highlands Mayor and Council or by a developer or any of his or her successors or assignees, whereby land within the Redevelopment Area is restricted upon the basis of race, creed, color, ancestry, sex, national origin, family status, disability, or sexual orientation in the sale, lease, use or occupancy thereof. Appropriate covenants, running with the land forever, will prohibit such restrictions and shall be included in the disposition instruments. There shall be no restrictions of occupancy or use of any part of the Redevelopment Area on the basis of race, creed, color, ancestry, sex, national origin, family status, disability, or sexual orientation.

E. Affordable Housing Provisions

This paragraph addresses the requirements of the LRHL at N.J.S.A. 40A:12A-7 pertaining to existing affordable dwelling units. The Redevelopment Area includes 155 tax lots, of which approximately 100 are developed with buildings that include one or more residential units, either as a freestanding residential use or within a mixed-use structure. There are no known dwelling units in the Redevelopment Area subject to formal affordability controls. Any residents displaced by redevelopment of a building containing a dwelling unit will be provided statutory relocation services.

The mandatory set-aside requirements in Section 26-2 of the Borough of Highlands Affordable Housing Ordinance apply to any multifamily residential development of five (5) dwelling units or more, including the residential portion of a mixed-use project. Any affordable housing obligation shall be addressed in the Redevelopment Agreement.

F. Deviation Requests

The Highlands Land Use Board may grant deviations from the regulations contained within this Redevelopment Plan where, by reason of exceptional narrowness, shallowness or shape of a specific piece of property, or by reason of exceptional topographic conditions, pre-existing structures or physical features uniquely affecting a specific piece of property, the strict application of any area, yard, bulk or design objective or regulation adopted pursuant to this Redevelopment Plan, would result in peculiar practical difficulties to, or exceptional and undue hardship upon, the developer of such property. The Highlands Land Use Board may also grant such relief in an application relating to a specific piece of property where the purposes of this Redevelopment Plan would be advanced by a deviation from the strict requirements of this Redevelopment Plan and the benefits of the deviation would outweigh any detriments. No relief may be granted under the terms of this section unless such deviation or relief can be granted without substantial detriment to the public good and without substantial impairment of the intent and purpose of the Redevelopment Plan. An application for a deviation from the requirements of this Redevelopment Plan shall provide public notice of such application in accord with the requirements of public notice as set forth in N.J.S.A. 40:55D-12a and b.

Deviation requests are not permitted on any FEMA regulation, NFIP standard, Highlands Borough Floodplain Management Regulation (Land Use Chapter 21), or Uniform Construction Code regulations.

Notwithstanding the above, any changes which would result in a “d” variance shall be permitted only by means of an amendment of the Redevelopment Plan by the Borough governing body and only upon a finding that such deviation would be consistent with and the furtherance of the goals and objectives of this Redevelopment Plan.

G. Escrows

Any redeveloper shall be responsible to post sufficient escrows to cover any and all costs of the professional consultants retained by the Borough of Highlands to review the proposed redevelopment project and advise the Borough on any and all aspects of the redevelopment process.

H. Electric Vehicle Charging Infrastructure

Pursuant to the LRHL at N.J.S.A. 40A:12A-7, the Redevelopment Plan mandates the provision of public electric vehicle charging infrastructure in a manner that appropriately connects with an essential public charging network. There are multiple existing municipal parking lots in the Redevelopment Area, of which one or more may be considered for siting of the charging network. In addition, pursuant to P.L. 2021, c.171, which was signed into law on July 9, 2021, electric vehicle supply/service equipment and parking spaces pre-wired for electric vehicle supply/service are now permitted accessory uses in all zoning or use districts Statewide, and certain nonresidential and multifamily residential developments are subject to installation of electric vehicle charging infrastructure.

XII. PLAN CONSISTENCY REVIEW

A. Relationship to Master Plans of Adjacent Municipalities

The Borough of Highlands shares municipal boundaries with the Borough of Atlantic Highlands, the Township of Middletown and the Borough of Sea Bright. However, the Redevelopment Area is located in the interior of Highlands and is not proximate to any of the adjacent municipalities. This Redevelopment Plan will not impact any of the adjacent municipalities or their master plans.

B. Relationship to the Monmouth County Master Plan

Monmouth County's current Master Plan was adopted in 2016. The Monmouth County Master Plan designates Highlands as a "Priority Growth - Reinvestment Area/Site Overlay (PG-RAS)." These are defined as "(a)reas or sites located within the PGIA where more intense or significant development, redevelopment, revitalization, and hazard mitigation investments are highly encouraged."

The Redevelopment Plan is also consistent with the goals of the Monmouth County Master Plan, notably the following: "Promote beneficial development and redevelopment that continues to support Monmouth County as a highly desirable place to live, work, play, and stay."

In addition, Monmouth County conducted a Master Plan Reexamination in 2018. The 2018 Reexamination reaffirms the goals, principles, objectives, and policy recommendations of the 2016 Master Plan.

C. Relationship to the State Development and Redevelopment Plan

The New Jersey State Development and Redevelopment Plan (the "SDRP") was originally adopted in 1992. The purpose of the SDRP according to the State Planning Act at N.J.S.A. 52:18A-200(f) is to:

Coordinate planning activities and establish Statewide planning objectives in the following areas: land use, housing, economic development, transportation, natural resource conservation, agriculture and farmland retention, recreation, urban and suburban redevelopment, historic preservation, public facilities and services, and intergovernmental coordination.

A revised version of the plan was adopted by the State Planning Commission in 2001. While required by the State Planning Act to be revised and readopted every three years, the SDRP has only been re-adopted once during the 29 years since its original adoption. It is anticipated that a revised draft SDRP will be released to the public and subject to the cross-acceptance process in April, 2024.

This Redevelopment Plan is consistent with the SDRP, as it epitomizes the smart growth principles set forth. In particular, the Redevelopment Plan promotes the preservation and reuse of developed property, and development of vacant properties, in an area well served by infrastructure, roads and transit, while also promoting upgrades to mitigate impacts from flooding. This Redevelopment Plan therefore furthers the goals, strategies and policies of the SDRP.

XIII. PROCEDURE FOR AMENDING THE PLAN

This Redevelopment Plan may be amended from time to time upon compliance with the requirements of law. Applicable fees and escrows shall be payable to the Borough of Highlands for any request to amend this Plan.

APPENDIX A: REDEVELOPMENT AREA TAX PARCELS

BLOCK	LOT	ADDRESS
40.01	21.01	40 WEST NORTH STREET
40.01	21.02	42 WEST NORTH STREET
40.01	22.01	38 WEST NORTH STREET
41	2.01	57 BAY AVENUE
41	3	59 BAY AVENUE
41	4	61 BAY AVENUE
41	5	65-67 BAY AVENUE
41	6	69-71 BAY AVENUE
41	7	30 SECOND STREET
41	8	75 BAY AVENUE
41	9	BAY AVENUE
41	10	85-87 BAY AVENUE
41	13.01	95-99 BAY AVENUE
42	1	60 BAY AVENUE
42	10	88 BAY AVENUE
42	12.01	84 BAY AVENUE
42	13	78 BAY AVENUE
42	14	74 BAY AVENUE
42	15	68 BAY AVENUE
45	4.01	102 BAY AVENUE
45	6.01	98 BAY AVENUE
45	7	92 BAY AVENUE – KAY STREET
46	1	103-107 BAY AVENUE
46	2	111 BAY AVENUE
46	3	123 BAY AVENUE
46	4	125 BAY AVENUE
46	5	139 BAY AVENUE
46	6	141 BAY AVENUE
46	7	143 BAY AVENUE
46	8	BAY AVE & WEST NO ST
47	6	132 BAY AVENUE
47	7	130 BAY AVENUE
47	8	128 BAY AVENUE
47	9	126 BAY AVENUE
47	10	124 BAY AVENUE
47	11	122 BAY AVENUE
47	12	120 BAY AVENUE
52	1	CORNWALL ST & BAY
52	2	140 BAY AVENUE
53	1	MILLER ST
53	2	65 MILLER STREET
53	3	9 WEST NORTH STREET
53	4	7 NORTH STREET
53	5	63 MILLER STREET
53	6	BAY AVE & MILLER ST
53	7	BAY AVENUE
53	8	157 BAY AVENUE
53	9	151 BAY AVENUE
54	1	150 BAY AVENUE
54	3.01	146-148 BAY AVE
54	4	144 BAY AVENUE
54	5	38 NORTH STREET
54	7.01	49 MILLER STREET
58	1	154 BAY AVENUE
58	3.01	50 MILLER STREET
58	17.01	192 BAY AVENUE
58	18	190 BAY AVENUE
58	19 (& 20)	188 BAY AVENUE
58	23.01	182 BAY AVENUE
58	24	170 BAY AVENUE
58	25	168 BAY AVENUE
58	26	164 BAY AVENUE
59	5	SECOND ST
59	6	SECOND TO MILLER
59	8	66 MILLER STREET
59	9	165 BAY AVENUE
59	10	171 BAY AVENUE
59	11.01	181 BAY AVENUE
59	11.02	179 BAY AVENUE
59	13.01	187 BAY AVENUE
59	14	191 BAY AVENUE
59	16.01	193-195 BAY AVENUE
63	4	VALLEY STREET
63	5	197 BAY AVENUE
63	6	203 BAY AVENUE
63	7	205 BAY AVENUE
63	9.01	207 BAY AVENUE
63	10	211 BAY AVENUE
63	11	213 BAY AVENUE
63	13.01	215 BAY AVENUE
63	14	219-221 BAY AVENUE
63	15	219-221 BAY AVENUE
63	16	225 BAY AVENUE
63	17	227 BAY AVENUE

BLOCK	LOT	ADDRESS
63	19.01	231 BAY AVENUE
64	1	196 BAY AVENUE
64	2	208 BAY AVENUE
64	17	230 BAY AVENUE
64	18	228 BAY AVENUE
64	19	226 BAY AVENUE
64	20	222 BAY AVENUE
64	21	218 BAY AVENUE
64	22	218 BAY AVENUE
64	23	216 BAY AVENUE
64	24	214 BAY AVENUE
64	25	210 BAY AVENUE
64	28.01	208 BAY AVENUE
69	1	234 BAY AVENUE
69	2	238 BAY AVENUE
69	4.01	242 BAY AVENUE
69	6.01	29 ATLANTIC STREET
70	1	233 BAY AVENUE
70	2	235 BAY AVENUE
70	3	237 BAY AVENUE
70	15	239 BAY AVENUE
70	16	241 BAY AVENUE
70	17	245 BAY AVENUE
71	4	247 BAY AVE – ATLANTIC ST
71	5	249 BAY AVENUE
71	6	251 BAY AVENUE
72	1	28 ATLANTIC STREET
72	2	BAY AVENUE
72	11.01	270 BAY AVENUE
72	12	272 BAY AVENUE
73	2	SEADRIFT AVENUE
74	1	273 BAY AVENUE
74	8.01	83 BARBARIE AVENUE
74	9	277 BAY AVENUE
75	1	274-276 BAY AVENUE
75	17	282 BAY AVENUE
75	18	284 BAY AVENUE
80	1	286 BAY AVENUE
80	2	288 BAY AVENUE
80	20	294 BAY AVENUE
80	21	292 BAY AVENUE

BLOCK	LOT	ADDRESS
80	22	290 BAY AVENUE
81	1	285 BAY AVENUE
81	10.01	295 BAY AVENUE
81	12	289 BAY AVENUE
82	1.01	297-299 BAY AVENUE
82	6.01	BAY & HUDDY AVE
83	1 (& 14)	300 BAY AVENUE
88	1.01	311 BAY AVENUE
88	2	71 WATERWITCH AVENUE
88	3	71 WATERWITCH AVENUE
88	4.01	67-69 WATERWITCH AVENUE
88	5	321 BAY AVENUE
89	1	310 BAY AVENUE
89	2	58-60 HUDDY AVENUE
89	13.01	65 WATERWITCH AVENUE
94	1	BAY & WATERWITCH AVE
94	15.02 & 15.03 (was 15)	69-71 SNUG HARBOR AVE
94	16	329 BAY AVENUE
95	1	WATERWITCH & BAY AVE
96	1	331 BAY AVENUE
96	2.01	171 BAY AVENUE
96.01	2.01	BAY AVENUE
96 (was 96.01)	3	409 BAY AVENUE
114	1.01	SHORE DRIVE
114	1.02	SHORE DRIVE
114	3.02	SHORE DRIVE

Borough of Highlands
42 Shore Drive
Highlands, NJ 07732
(732) 872-1224
www.highlandsborough.org

LAND USE BOARD APPLICATION

FOR OFFICIAL USE
Date Rec'd: 11/18/2022 Application #: 2022-10 Fee: $525 (ck# 210519) Escrow: $1050 (ck# 210520)

1. APPLICANT

Name: Home & Land Development Corp
Address: 88-1 Portland Road
City: Highlands State: NJ Zip: 07732
Phone: 917-686-4111
Email: GNF718@aol.com
Relation to property: Owner of Block 35, Lots 8 & 9

2. OWNER

Name: Home & Land Development Corp - Block 35, Lots 8 & 9
Address: 88-1 Portland Road
City: Highlands State: NJ Zip: 07732
Phone: 917-686-4111
Email: GNF718@aol.com

3. TYPE OF APPLICATION (Check all that apply)

- [x] Minor Subdivision
- [ ] Major Subdivision – Preliminary
- [ ] Major Subdivision – Final
- [ ] Minor Site Plan
- [ ] Major Site Plan – Preliminary
- [ ] Major Site Plan – Final
- [x] Variance
- [ ] Use Variance
- [ ] Appeal – Zoning Denial date _____
- [ ] Appeal – Land Use Decision date _____
- [ ] Informal Concept Plan Review
- [ ] Extension of Approval
- [ ] Revision/Resubmission of Prior Application
- [ ] Other _____

4. PROPERTY INFORMATION

Block 35 Lot(s) 8 & 9 Address: 14 North Peak and 32 North Peak
Lot size _____ # of Existing Lots 2 # of Proposed Lots 2
Zone R101 Are there existing Deed Restrictions or Easements? [ ] No [ ] Yes – Please attach copies
Has the property been subdivided? [x] No [ ] Yes If yes, when? _____
Attach copies of approved map or approved resolution
Property taxes paid through _____ Sewer paid through _____

5. ATTORNEY (A corporation, LLC, Limited Partnership, or S-Corp **must** be represented by a NJ attorney)

Name: Michael A. Bruno, Esq.; Giordano Halleran & Ciesla
Address: 125 Half Mile Road, Suite 300, Red Bank, NJ 07701
Phone: 732-741-3900 Email: mbruno@ghclaw.com

Borough of Highlands
42 Shore Drive
Highlands, NJ 07732
(732) 872-1224
www.highlandsborough.org

6. APPLICANT'S OTHER PROFESSIONAL(S) – Engineer, Planner, Architect, etc.

Name: Thomas Santry, P.A.
Address: 128 E. River Road
Rumson, New Jersey 07760
Phone: 732-741-4800
Email:

Name:
Address:
Phone:
Email:

7. LAND USE

A. PROPERTY HISTORY –Describe in detail, nature of prior use(s) on the site, start date of such use, any prior Land Use Board applications for this site (attach copy of resolution, if applicable), history of current ownership, etc.

The property is presently used for single-family residence.

B. PROPOSED PLAN –Describe in detail, proposed use for property, including, but not limited to: 1) portion to be subdivided; 2) sell lot only; 3) construct house(s) for sale; 4) how trash will be disposed; 5) landscaping; 6) hours of operation; 7) type of goods/services; 8) fire lane. Attach additional sheets if necessary.

Applicant purposes to subdivide the property into two conforming building lots and will construct two retaining walls at the property prior to constructing two (2) residential homes. Applicant seeks variance relief from the Borough's Steep Slope requirements.

C. ADDITIONAL INFORMATION:

		Existing	Proposed
Residential:	How many dwelling units?	1	2
	How many bedrooms in each unit?		tbd
	How many on-site parking spaces?		tbd
Commercial:	How many commercial uses on site?	N/A	N/A
	How many on-site parking spaces?		

Borough of Highlands
42 Shore Drive
Highlands, NJ 07732
(732) 872-1224
www.highlandsborough.org

8. VARIANCE REQUESTS Complete section(s) related to the relief being requested. **

	Req'd	Exist.	Prop'd
Minimum Lot Requirements			
Lot Area			
Frontage			
Lot Depth			
Minimum Yard Requirements			
Front Yard Setback			
2nd Front Yard Setback			
Rear Yard Setback			
Side Yard Setback, right			
Side Yard Setback, left			
Building Height			

	Req'd	Exist.	Prop'd
Accessory Structures			
Fence/Wall Height			
Garage/Shed Height			
Garage/Shed Area			
Pool Setback			
Parking Requirements			
On-site Parking Spaces			
Other (please add)			

**See zoning table on sheet 3 of the minor subdivisoin plans

9. OTHER RELIEF REQUESTED Please specify relief(s) and explain below.

Applicant seeks variance relief from the Borough's Steep Slope requirements

Borough of Highlands
42 Shore Drive
Highlands, NJ 07732
(732) 872-1224
www.highlandsborough.org

10. NOTARIZED SIGNATURE OF APPLICANT

I certify that the foregoing statements and the materials submitted are true. I further certify that I am the individual Applicant, or that I am an Officer of the Applicant authorized to sign the application for the business organization. Additionally, I certify that the survey or plans submitted with this application shows and discloses the premises in its entirety, and I further certify that no buildings, fences, or other facilities have been constructed, installed, or otherwise located on the premises after the date of the survey with the exception of the structures shown.

SWORN & SUBSCRIBED to before me this

23 day of September 20 22 (year)

Carrie Lenahan (notary)

CARRIE LENAHAN (Seal)
A NOTARY PUBLIC OF NEW JERSEY
MY COMMISSION EXPIRES FEBRUARY 8, 2027

Home & Land Development Corp

Signature 9/23/22 Date

Charles Farkouh, President

Print Full Name

11. NOTARIZED CONSENT OF OWNER

I certify that I am the Owner of the property which is the subject of this application, hereby consent to the making of this application and approval of the plans submitted herewith. I further consent to the inspection of this property in connection with this application as deemed necessary by the municipal agency (if owned by a corporation, a resolution must be attached authorizing the application and officer signature).

SWORN & SUBSCRIBED to before me this

_____ day of _____ 20_____ (year)

_____ (notary)

(Seal)

_____
Signature Date

_____
Print Full Name

12A. DISCLOSURE STATEMENT Circle all that apply.

Pursuant to N.J.S.A. 40:55D-48.1 & 48.2, please answer the following questions:

Is this application to subdivide a parcel of land into six (6) or more lots?	Yes	(No)
Is this application to construct a multiple dwelling of 25 or more units?	Yes	(No)
Is this an application for approval of a site(s) for non-residential purposes?	Yes	(No)
Is this Applicant a corporation?	(Yes)	No
Is the Applicant a limited liability corporation?	Yes	(No)
Is the Applicant a partnership?	Yes	(No)

If you circled **YES** to any of the above, please complete the following Ownership Discloser Statement (use additional sheets if necessary).

Borough of Highlands
42 Shore Drive
Highlands, NJ 07732
(732) 872-1224
www.highlandsborough.org

12B. BUSINESS ORGANIZATION OWNERSHIP DISCLOSURE STATEMENT

Name of Corporation, Partnership, LLC, LLP, S-Corp:

Home & Land Development Corp

Listed below are the names and addresses of all owners of 10% or more of the stock/interest* in the above referenced business organization:

NAME	ADDRESS
Charles Farkouh, President	88-1 Portland Road, Highlands, NJ 07732

*If a corporation or a partnership owns 10% or more of the stock of a corporation, or 10% or great interest in a partnership, that corporation or partnership shall list the names and address of its stockholders holding 10% or more of its stock or 10% or greater interest in the partnership, and this requirement shall be followed until the names and addresses of the non-corporate stockholders and individual partners, exceeding the 10% owner ship criterion established have been listed.

SWORN & SUBSCRIBED to before me this

23 day of September 2022 (year)

Carrie Lenahan (notary)

(Seal)

CARRIE LENAHAN
A NOTARY PUBLIC OF NEW JERSEY
MY COMMISSION EXPIRES FEBRUARY 8, 2027

Home & Land Development Corp

Signature (Officer/Partner) — 9/23/22 Date

Charles Farkouh, President

Print Full Name — Title

NOTE: A WRITTEN "WAIVER AND DIRECTION NOT TO SET CORNER MARKERS" HAS BEEN OBTAINED FROM THE ULTIMATE USER PURSUANT TO N.J.A.C. 13:40-5.1(d).

THE INFORMATION SHOWN HEREIN CORRECTLY REPRESENTS THE CONDITIONS FOUND AT, AND AS OF THE DATE OF THE FIELD SURVEY, EXCEPT SUCH IMPROVEMENTS OR EASEMENTS, IF ANY, BELOW THE SURFACE AND NOT VISIBLE

THIS SURVEY IS SUBJECT TO CHANGE ACCORDING TO THE FACTS THAT A CURRENT TITLE REPORT MAY DISCLOSE

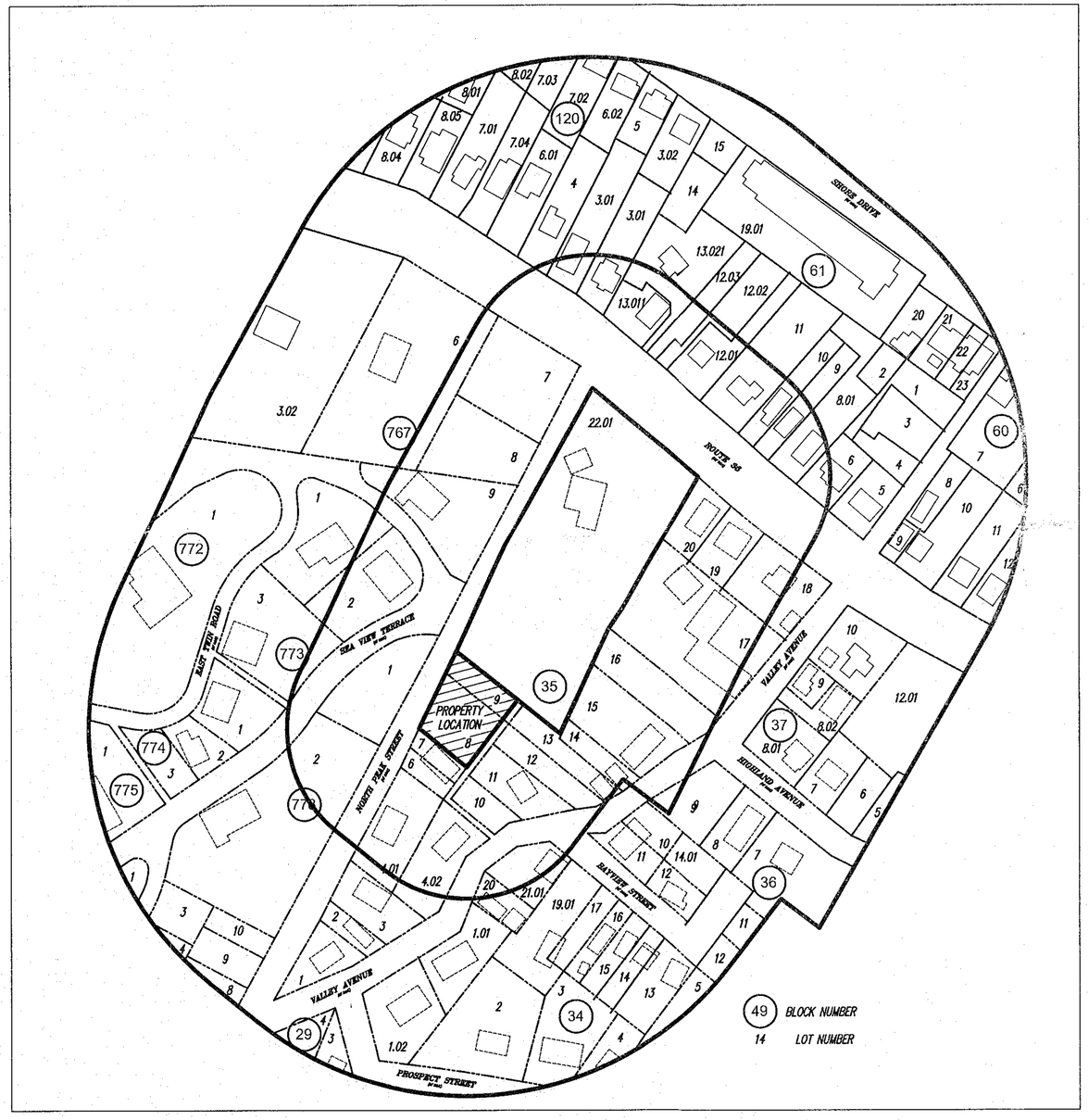

SCALE: 1"=150'

0 150 300 600 ft.

LIST OF OWNERS WITHIN 200 FEET				LIST OF OWNERS WITHIN 200 FEET (CONTINUED)				LIST OF OWNERS WITHIN 200 FEET (CONTINUED)			
BLOCK	LOT		PROPERTY OWNER	BLOCK	LOT		PROPERTY OWNER	BLOCK	LOT		PROPERTY OWNER
758	1.01		MONMOUTH HILLS INC. ACCESS PROP MGMT 1090 KING GEORGES POST RD EDISON, NJ 08837	35	22.01		DIEBOLD RICHARD & MISCHELE 221 NAVESINK AVENUE HIGHLANDS, NJ 07732	36	10		BRANIN GARY & PAMELA J 97 VALLEY AVENUE HIGHLANDS NJ 07732
778	1		MONMOUTH HILLS INC. ACCESS PROP MGMT 1090 KING GEORGES POST RD EDISON, NJ 08837	35	4.02		MALONE PATRICK FRANCIS & PAULA ANN 110 VALLEY AVENUE HIGHLANDS, NJ 07732	36	9		JERSEY CENTRAL P & L ATTN. TAX DEP 800 CABIN HILL DR. GREENSBURG PA 15601
35	6		ALVATOR DONNA 10 NORTH PEAK STREET HIGHLANDS, NJ 07732	35	15		AKER EDWARD W & EVELYN 92 VALLEY AVENUE HIGHLANDS, NJ 07732	61	6		TAYLOR TIFFANY 188 NAVESINK AVENUE HIGHLANDS NJ 07732
35	10		DORIN JOSEPH & JOSEPH DORIN LM 102 VALLEY AVENUE HIGHLANDS, NJ 07732	767	9		FARROW LEONILDA A & CECIL W PO BOX 646 NAVESINK, NJ 07752	61	12.02		RILE ELIZABETH A & MCCOLGAN CATHE 214 NAVESINK AVENUE HIGHLANDS NJ 07732
35	12		DORIN JOSEPH & JOSEPH DORIN LM 102 VALLEY AVENUE HIGHLANDS, NJ 07732	778	2		ONEIL MICHAEL & KATHY 34 SEAVIEW TERR HIGHLANDS, NJ 07732	34	19.01		AZZOLINA GREGG 2 BAYVIEW STREET HIGHLANDS, NJ 07732
35	8		FELICIANO JERRY 202 N BROUGHTON SQUARE BOYNTON BEACH, FL 33436	774	1		MCALEVY COLLEEN FLINN 38 E TWIN RD HIGHLANDS, NJ 07732	35	19		BOLGER MARY CATHERINE 1500 S PENINSULA DRIVE DAYTON BEACH FL 32118
35	14		NEWMAN SR. RONALD & NANCY 94 VALLEY AVENUE HIGHLANDS, NJ 07732	773	2		REINAUER CRAIG 32 SEAVIEW TERR HIGHLANDS NJ 07732	35	20		STEGNER DAWN 193 STATE HIGHWAY 36 HIGHLANDS, NJ 07732
34	20		109 VBALLEY AVE LLC 13 JARED LANE LITTLE EGG HARBOR, NJ 08087	773	3		GLASS KEITH 37 E TWIN RD HIGHLANDS, NJ 07750	120	3.01		FERREIRA JOSEPH & MARIA 222 NAVESINK AVENUE HIGHLANDS NJ 07732
35	7		ALVATOR DONNA 10 NORTH PEAK STREET HIGHLANDS, NJ 07732	35	16		FENDICK KERRY & VALENCIA ENRIQUE 78 VALLEY AVE HIGHLANDS, NJ 07732	61	8.01		GRIESER HENRY 190 NAVESINK AVENUE HIGHLANDS, NJ 07732
34	1.01		LEMEGA JERRY & NADIYA 111 VALLEY AVE HIGHLANDS, NJ 07732	35	17		VALLEY AVENUE MANAGEMENT LLC 82 VALLEY AVENUE HIGHLANDS, NJ 07732	61	12.03		RILE ELIZABETH 214-A NAVESINK AVENUE HIGHLANDS NJ 07732
34	21.01		WAGNER PETER 101 VALLEY AVENUE HIGHLANDS, NJ 07732	35	4.01		JOHNSON EDWARD W 2 NORTH PEAK STREET HIGHLANDS, NJ	61	13.011		HAMLIN ANTHONY M & JOHNSON BRIANA 216 NAVESINK AVENUE HIGHLANDS NJ 07732
35	11		DORIN JOSEPH & JOSEPH DORIN 102 VALLEY AVENUE HIGHLANDS, NJ 07732	773	1		PHAIR ARTHUR H & KUGELMANN 36 E TWIN ROAD HIGHLANDS, NJ 07732	61	13.021		ELSON JEROME & BARBRA 294 SLOCUM WAY FORT LEE NJ 07024
35	9		HOME & LAND DEVELOPMENT CORP 88-1 PORTLAND ROAD HIGHLANDS. NJ 07732	767	6		STRUSE ANDREW E & SASSOLA STEPHANIE PO BOX 245 NAVESINK NJ	35	18		NAVESINK AVE PROPERTIES LLC 40 CARRAIGE WAY MILLSTONE, NJ 08510
36	11		BRANIN GARY & PAMELA 97 VALLEY AVE HIGHLANDS, NJ 07732	61	10		BOCCO NICOLE E 206 NAVESINK AVENUE HIGHLANDS, NJ 07732	61	9		ROBERTSON RICHARD M 194 NAVESINK AVENUE HIGHLANDS NJ 07732
35	13		SERGHIS DEMETRIOUS 96 VALLEY AVENUE HIGHLANDS, NJ 07732	61	12.01		BREITHOFF CHARLES & REGINA MCGRATH 212 NAVESINK AVENUE HIGHLANDS, NJ 07732	61	11		CHRISTOPHER WALDEMAR & POPOWSKI B 376 BROOK AVE PASSAIC, NJ 07055
								120	4		O NEIL RICHARD W & NANCY L 224 NAVESINK AVENUE HIGHLANDS NJ 07732

UTILITY AND GOVERNMENTAL AGENCY TO BE NOTIFIED

JCP&L
300 MADISON AVENUE
PO BOX 1911
MORRISTOWN, NJ 07960

NEW JERSEY AMERICAN WATER COMPANY
ATTN: CONSTRUCTION DEPARTMENT
661 SHREWSBURY AVE
SHREWSBURY, NJ 07702

COMCAST COMMUNICATIONS OF MONMOUTH COUNTY
RON BERTRAND, CONSTRUCTION FOREMAN
403 SOUTH ST
EATONTOWN, NJ 07724

VERIZON COMMUNICATIONS
ONE VERIZON WAY
BASKING RIDGE, NJ 07920

TOWNSHIP OF MIDDLETOWN SEWERAGE AUTHORITY
RAYMOND J. NIERSTEDT, P.E., EXECUTIVE DIRECTOR
PO POX 205, 100 BEVERLY WAY
BELFORD , NJ 07718

NJ NATURAL GAS COMPANY
PO BOX 1464, 1415 WYCKOFF ROAD
WALL, NJ 07719

MONMOUTH COUNTY BAYSHORE OUTFALL AUTHORITY
ATTN: EXECUTIVE DIRECTOR
PO BOX 184, 200 HARBOR WAY
BELFORD, NJ 07718

NO DETERMINATION HAS BEEN MADE AS TO THE PRESENCE OR ABSENCE OF WETLANDS ON THIS PROPERTY. NO STATEMENT IS BEING MADE OR IMPLIED HEREIN, NOR SHOULD IT BE CONSTRUED THAT ANY STATEMENT IS BEING MADE BY THE FACT THAT NO EVIDENCE OF THE SAME IS PORTRAYED HEREIN.

I HEREBY CERTIFY THAT THIS IS A TRUE AND ACCURATE SURVEY MADE ON THE GROUND. THERE ARE NO ENCROACHMENTS EITHER WAY ACROSS PROPERTY LINES EXCEPT AS SHOWN

IF THIS DOCUMENT DOES NOT CONTAIN A RAISED IMPRESSION SEAL OF THE PROFESSIONAL IT IS NOT AN ORIGINAL

RESPONSIBLE PROFESSIONAL'S SIGNATURE DATE:
THOMAS P. SANTRY, JR. P.L.S.
PROFESSIONAL LAND SURVEYOR
P.L.S. LIC. No. 24GS3540000

MINOR SUBDIVISION OF LOTS 8, 9 ~ BLOCK 35

32 & 14 North Peak Street
Borough of Highlands
Monmouth County, New Jersey

THOMAS P. SANTRY, P.A.
ENGINEERS AND SURVEYORS
ONE HUNDRED TWENTY EIGHT EAST RIVER ROAD
RUMSON, NEW JERSEY 07760
PHONE (732) 741-4800 FAX (732) 741-0084

PROJ. No. 22-074
SCALE 1" = 20'
DATE 7/29/22
DRAWN BY MGB
TAX MAP SHEET # 10
SHEET 1 OF 3
DRAWING No. HL25

COPYRIGHT - ALL RIGHTS RESERVED THE COPYING OR REUSE OF THIS DOCUMENT, OR PORTIONS THEREOF, FOR OTHER THAN THE ORIGINAL PROJECT OR THE PURPOSE ORIGINALLY INTENDED, WITHOUT THE WRITTEN PERMISSION OF THOMAS P. SANTRY, SURVEYING IS PROHIBITED

NOTE: A WRITTEN "WAIVER AND DIRECTION NOT TO SET CORNER MARKERS" HAS BEEN OBTAINED FROM THE ULTIMATE USER PURSUANT TO N.J.A.C. 13:40-5.1(d).

THE INFORMATION SHOWN HEREIN CORRECTLY REPRESENTS THE CONDITIONS FOUND AT, AND AS OF THE DATE OF THE FIELD SURVEY, EXCEPT SUCH IMPROVEMENTS OR EASEMENTS, IF ANY, BELOW THE SURFACE AND NOT VISIBLE

THIS SURVEY IS SUBJECT TO CHANGE ACCORDING TO THE FACTS THAT A CURRENT TITLE REPORT MAY DISCLOSE

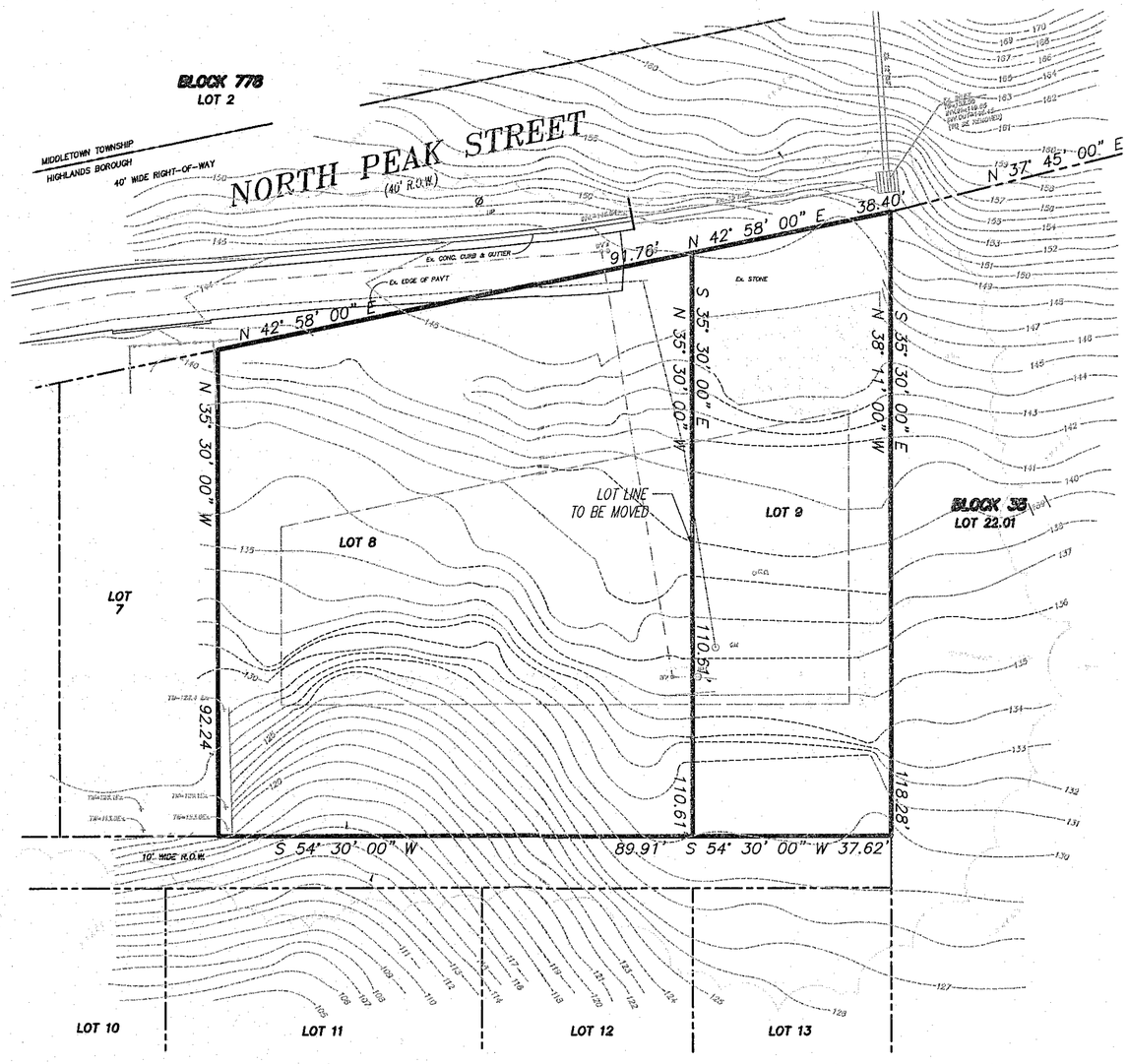

LOT 22.01

EXISTING

SCALE: 1"=20'

0 20 40 80 ft.

NO DETERMINATION HAS BEEN MADE AS TO THE PRESENCE OR ABSENCE OF WETLANDS ON THIS PROPERTY. NO STATEMENT IS BEING MADE OR IMPLIED HEREIN, NOR SHOULD IT BE CONSTRUED THAT ANY STATEMENT IS BEING MADE BY THE FACT THAT NO EVIDENCE OF THE SAME IS PORTRAYED HEREIN.

I HEREBY CERTIFY THAT THIS IS A TRUE AND ACCURATE SURVEY MADE ON THE GROUND. THERE ARE NO ENCROACHMENTS EITHER WAY ACROSS PROPERTY LINES EXCEPT AS SHOWN

IF THIS DOCUMENT DOES NOT CONTAIN A RAISED IMPRESSION SEAL OF THE PROFESSIONAL IT IS NOT AN ORIGINAL

RESPONSIBLE PROFESSIONAL'S SIGNATURE DATE:
THOMAS P. SANTRY, JR. P.L.S.
PROFESSIONAL LAND SURVEYOR
P.L.S. LIC. No. 24GS3540000

MINOR SUBDIVISION OF LOTS 8, 9 ~ BLOCK 35

32 & 14 North Peak Street
Borough of Highlands
Monmouth County, New Jersey

THOMAS P. SANTRY, P.A.
ENGINEERS AND SURVEYORS
ONE HUNDRED TWENTY EIGHT EAST RIVER ROAD
RUMSON, NEW JERSEY 07760
PHONE (732) 741-4800 FAX (732) 741-0084

PROJ. No.	22-074
SCALE	1" = 20'
DATE	7/29/22
DRAWN BY	MGB
TAX MAP SHEET #	10
SHEET	2 OF 3
DRAWING No.	HL25

COPYRIGHT – ALL RIGHTS RESERVED THE COPYING OR REUSE OF THIS DOCUMENT, OR PORTIONS THEREOF, FOR OTHER THAN THE ORIGINAL PROJECT OR THE PURPOSE ORIGINALLY INTENDED, WITHOUT THE WRITTEN PERMISSION OF THOMAS P. SANTRY, SURVEYING IS PROHIBITED

NOTE: A WRITTEN "WAIVER AND DIRECTION NOT TO SET CORNER MARKERS" HAS BEEN OBTAINED FROM THE ULTIMATE USER PURSUANT TO N.J.A.C. 13:40-5.1(d).

THE INFORMATION SHOWN HEREIN CORRECTLY REPRESENTS THE CONDITIONS FOUND AT, AND AS OF THE DATE OF THE FIELD SURVEY, EXCEPT SUCH IMPROVEMENTS OR EASEMENTS, IF ANY, BELOW THE SURFACE AND NOT VISIBLE

THIS SURVEY IS SUBJECT TO CHANGE ACCORDING TO THE FACTS THAT A CURRENT TITLE REPORT MAY DISCLOSE

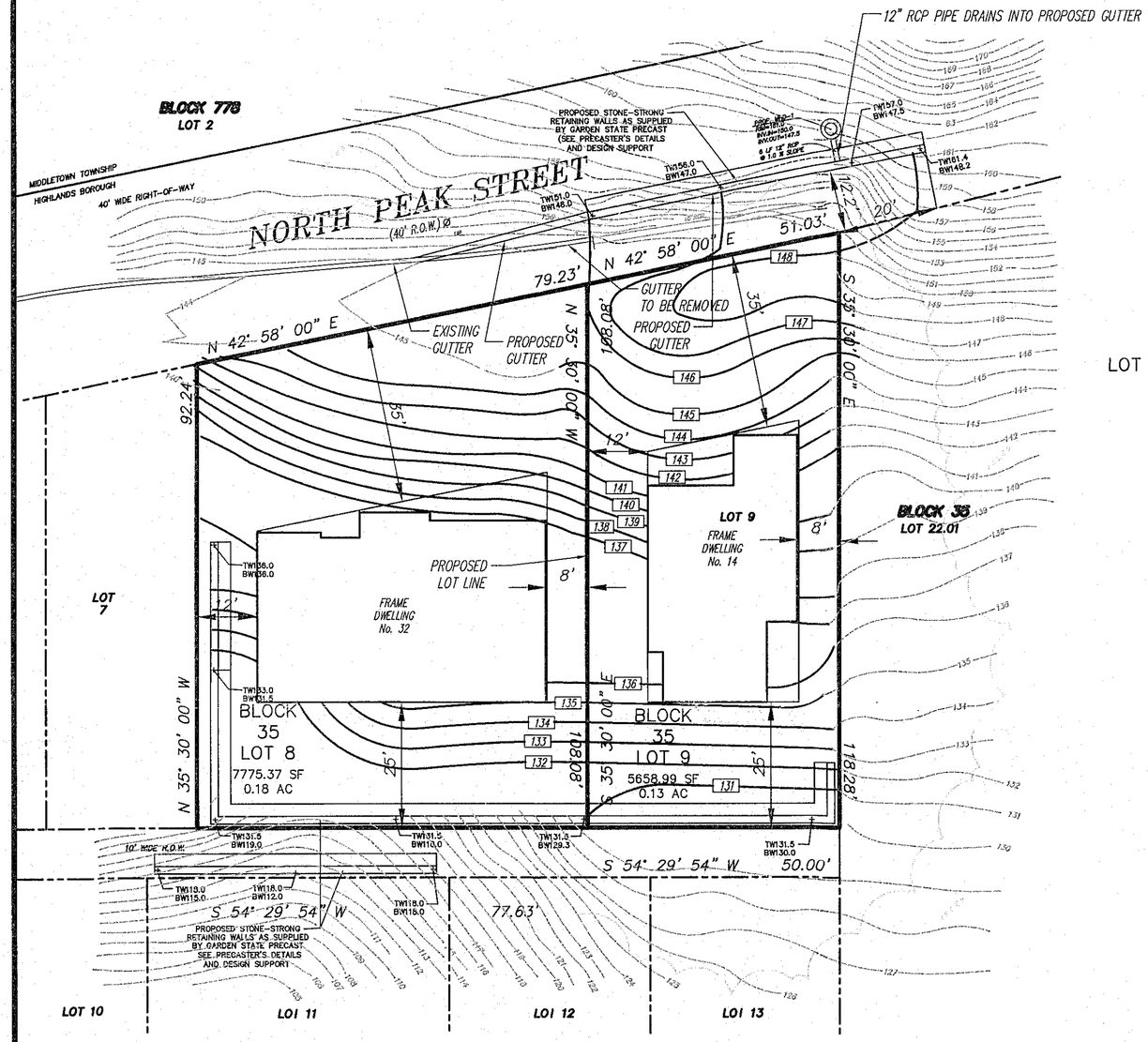

LOT 22.01

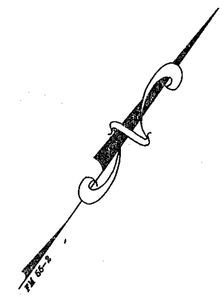

NOTES:

1. TOPOGRAPHY AND GRADING OBTAINED FROM A CERTAIN MAP ENTITLED "GRADING PLAN FOR HOME & LAND. DEVELOPMENT CORP. BLOCK 35 LOT 9" SAID MAP WAS DRAWN BY EASTERN CIVIL ENGINEERING, LLC ON 2/10/22. PROJECT NO. 2101980
2. SILT FENCE SHALL BE PLACED AROUND THE PERIMETER OF THE LIMITS OF DISTURBANCE AND REMAIN UNTIL SOIL IS STABILIZED
3. APPLICANT TO REPAIR ANY DAMAGED CURB OR PAVEMENT AS PART OF CONSTRUCTION
4. ELEVATIONS SHOWN HEREON REFER TO NORTH AMERICAN VERTICAL DATUM OF 1988
5. VARIANCE REQUESTED STEEP SLOPES ANALYSIS

BOROUGH OF HIGHLANDS
SCHEDULE OF LIMITATIONS
ZONE "R-1.01"

		PROPOSED	
PERMITTED USE		LOT 8	LOT 9
MINIMUM LOT AREA	5,000 SF	7,775.37 SF	5,658.99 SF
MINIMUM LOT DEPTH	100 FT	108.08'	118.28'
MINIMUM LOT FRONTAGE	50 FT	79.23'	51.03'
PRINCIPAL STRUCTURE			
MINIMUM FRONT SETBACK	35 FEET	35 FEET	35 FEET
MINIMUM REAR SETBACK	25 FEET	25 FEET	25 FEET
MINIMUM SIDE SETBACK	8/12 FEET	8/12 FEET	8/12 FEET
MAX LOT COVERAGE	70%	N/A	N/A
MAX BUILDING COVERAGE	30%	26.1%	22.6%
MAX BUILDING HEIGHT	30 FEET	N/A	N/A

SCALE: 1"=20'

0 20 40 80 ft.

NO DETERMINATION HAS BEEN MADE AS TO THE PRESENCE OR ABSENCE OF WETLANDS ON THIS PROPERTY. NO STATEMENT IS BEING MADE OR IMPLIED HEREIN, NOR SHOULD IT BE CONSTRUED THAT ANY STATEMENT IS BEING MADE BY THE FACT THAT NO EVIDENCE OF THE SAME IS PORTRAYED HEREIN.

I HEREBY CERTIFY THAT THIS IS A TRUE AND ACCURATE SURVEY MADE ON THE GROUND. THERE ARE NO ENCROACHMENTS EITHER WAY ACROSS PROPERTY LINES EXCEPT AS SHOWN

IF THIS DOCUMENT DOES NOT CONTAIN A RAISED IMPRESSION SEAL OF THE PROFESSIONAL IT IS NOT AN ORIGINAL

RESPONSIBLE PROFESSIONAL'S SIGNATURE DATE:
THOMAS P. SANTRY, JR. P.L.S.
PROFESSIONAL LAND SURVEYOR
P.L.S. LIC. No. 24GS3540000

PROPOSED

MINOR SUBDIVISION OF LOTS 8, 9 ~ BLOCK 35

32 & 14 North Peak Street
Borough of Highlands
Monmouth County, New Jersey

THOMAS P. SANTRY, P.A.
ENGINEERS AND SURVEYORS
ONE HUNDRED TWENTY EIGHT EAST RIVER ROAD
RUMSON, NEW JERSEY 07760
PHONE (732) 741-4800 FAX (732) 741-0084

PROJ. No.	22-074
SCALE	1" = 20'
DATE	7/29/22
DRAWN BY	MGB
TAX MAP SHEET #	10
SHEET	3 OF 3
DRAWING No.	HL25

GIORDANO, HALLERAN & CIESLA

A PROFESSIONAL CORPORATION
ATTORNEYS AT LAW

EVAN P. ZIMMERMAN, ESQ.
SHAREHOLDER
EZIMMERMAN@GHCLAW.COM
DIRECT DIAL: (732) 219-5496

(732) 741-3900
FAX: (732) 224-6599

www.ghclaw.com

November 1, 2022

Client/Matter No. 13551-0023

LAWYERS SERVICE
Nancy Tran, Land Use Board Secretary
Borough of Highlands
42 Shore Drive
Highlands, New Jersey 07732

RE: Home & Land Development Corp
14 North Peak and 32 North Peak
Block 35, Lots 8 & 9 (the "Property")

Dear Ms. Tran:

This firm represents Home & Land Development Corp ("Applicant") with regard to an application for minor subdivision approval and bulk variance relief regarding the above-referenced Property. In connection with this Application, the Applicant proposes to subdivide the property into two (2) conforming building lots ("Application"). The property is located at 14 North and 32 North Peak, Highlands, NJ and designated as Block 35, Lots 8 & 9 on the Borough's Tax Map ("Property"). The Property is located in the R101 Zone.

In support of the application please find the following:

1. Original and five (5) copies of the completed application;
2. Five (5) full size copies of the Minor Site Plan prepared by Thomas P. Santry, P.L.S. of Thomas P. Santry, P.A., Engineers and Surveyors dated July 29, 2022 consisting of three (3) sheets
3. Original signed W-9;
4. Copy of the 200' property owner list dated April 20, 2022;
5. Check in the amount of $525.00 made payable to the Borough of Highlands representing the application fee;

GIORDANO, HALLERAN & CIESLA
A PROFESSIONAL CORPORATION
ATTORNEYS AT LAW

6. Check in the amount of $1,050.00 made payable to the Borough of Highlands representing the escrow fee

Please review the enclosed and advise the undersigned if you require any additional information, and the earliest this matter can be scheduled for public hearing.

Kindly acknowledge receipt of the enclosed submission by signing a copy of this letter enclosed and return same to my attention. Thank you.

JAG/dw
cc: via email
Charles Farkouh
Thomas P. Santry, P.L.S.
Michael Bruno, Esq.
Denise Wegryniak
Evan P. Zimmerman, Esq.

The undersigned hereby acknowledges receipt of the within documents this _____ day of _____, 2022

_____

Docs #5976549-v1

GIORDANO, HALLERAN & CIESLA

A PROFESSIONAL CORPORATION
ATTORNEYS AT LAW

EVAN P. ZIMMERMAN, ESQ.
SHAREHOLDER
EZIMMERMAN@GHCLAW.COM
DIRECT DIAL: (732) 219-5496

(732) 741-3900
FAX: (732) 224-6599

www.ghclaw.com

November 21, 2022

Client/Matter No. 13551-0023

Via Lawyers Service
Nancy Tran, Land Use Board Secretary
Borough of Highlands
42 Shore Drive
Highlands, New Jersey 07732

RE: Home & Land Development Corp
14 North Peak and 32 North Peak
Block 35, Lots 8 & 9 (the "Property")

Dear Ms. Tran:

This firm represents Home & Land Development Corp ("Applicant") with regard to an application for minor subdivision approval and bulk variance relief regarding the above-referenced Property. Pursuant to your request, enclosed please find the following:

1. Check in the amount of $525.00 representing the application fee
2. Check in the amount of $1,050.00 representing the escrow fee

Please advise the undersigned if you require any additional information.

Very truly yours,

EVAN P. ZIMMERMAN

RECEIVED
NOV 22 2022
LAND USE BOARD

EVP/dw
Enclosures

Docs #6036547-v1

Borough of Highlands
42 Shore Drive, Highlands, NJ 07732
Phone: (732) 872-1224
www.highlandsborough.org

Zoning Permit Application

Note: All applications must be submitted with a property survey showing the sizes of the structure(s) and their location. Applications involving businesses must show the scope of the business and include all activities that will be a part of the business.

The following **NON-REFUNDABLE** fees shall apply: Residential Single & Two-Family $25 X Check # _____ Cash ____

Commercial/Other residential $50 ____ Check # _____ Cash ____

APPLICANT Name: Home & Land Development Corp Date: November 4, 2022

Address: 88-1 Portland Road, Highlands, NJ 07732

Phone# 917-686-4111 Email: _____

LOCATION OF THE WORK

Block: 35 Lot(s): 8 & 9 Zone: R101

Street Address: 14 North Peak and 32 North Peak

DESCRIPTION OF THE WORK TO BE PERFORMED (OR USE PROPOSED)

Applicant proposes to subdivide the property into two conforming building lots and will construct two retaining walls at the property prior to constructing (2) residential homes

Check one: X New* ____ Addition* ____ Alteration ____ Repair ____ Other

I certify the attached survey is accurate relating to existing and proposed improvements. In addition, I grant permission to the Borough of Highlands and their Agents to come onto the subject property, for the purposes of conducting inspections, relating to the application.

YES X NO ____

Signature: _____ Attorney for Applicant Date: 11/4/22

FLOOD HAZARD AREA DETERMINATION

Check applicable Flood Zone: ____ AE ____ VE ____ X

All applications within the AE and VE Flood Zones, as indicated upon the most recent FEMA Flood Maps, require submission of a determination from the NJDEP.

BOROUGH HALL USE ONLY

Determination: Approved ____ Denied ✓ Zoning Officer: _____ (NGP)

If your application has been DENIED, it is due to the following: Date: 11-14-22

Ordinance Section | Allowed/Required | Proposed

Remarks: _____

Note: A Zoning Permit indicates that the proposed project conforms to the planning/zoning regulations of the Borough of Highlands. A building permit is required (per the requirements of the Uniform Construction Code of NJ) BEFORE beginning work. The Zoning Permit is valid for one year. If your application has been denied, you may appeal this denial to the Land Use Board as provided by the New Jersey Municipal Land Use Law. You must submit letter of appeal to the Land Use Board Secretary **within 20 days**.

* Note: Applications for New and Addition require a Flood Plain Review Application to the Borough Flood Administrator upon submission of this application.

RECEIVED
NOV 08 20
By

YOUR GOALS. OUR MISSION.

HGPB- R1990

January 3, 2023

Nancy Tran, Land Use Board Secretary
Borough of Highlands Land Use Board
42 Shore Drive
Highlands, New Jersey 07732

Via Email (ntran@highlandsborough.org)

Re: Home & Land Development Corp
14 North Peak and 32 North Peak
Block 35, Lots 8 & 9
Single Family Residential (R-101) Zone
Minor Subdivision, Variance
First Completeness Review

Dear Ms. Tran:

As requested, we have reviewed the above referenced application in accordance with the Borough of Highlands Zoning and Land Use Regulations section entitled Part 3, Subdivision and Site Plan Review, Article VI, Application Procedure, and Article VIII, Plat and Plan Details, section 21-58.A – Minor Subdivision Plat.

The applicant submitted the following documents in support of this application:

1. Land Use Board Application for Subdivision and Variance dated November 18, 2022.
2. Minor Subdivision Plan prepared by Thomas P. Santry, Jr., P.L.S., dated July 29, 2022, consisting of one (1) sheet.

The following information was reviewed for completeness purposes pursuant to Ordinance Section 21-58.A:

Minor Subdivision Plat: The plat shall be prepared to scale, based on a current survey or some other similarly accurate base, at a scale of not less than one (1) inch equals one hundred (100) feet, to enable the entire tract to be shown on one (1) sheet. The plat shall be signed and sealed by a licensed New Jersey Land Surveyor and shall show or include the following information:

1. A key map at a scale of not less than 1" = 400' showing the location of that portion which is to be subdivided in relation to the entire tract and the surrounding area. **Provided**.
2. All existing structures, wooded areas and topographical features, such as slump blocks, within the portion to be subdivided and within seventy-five (75) feet thereof. **Partially provided.**
3. The name of the owner and all adjoining property owners and owners of property directly across the street as disclosed by the most recent municipal tax record. If there is no positive evidence of ownership of any parcel of adjoining property within two hundred (200) feet, a certificate will be presented from the custodian of tax records to that effect. **Provided.**
4. The Tax Map sheet, block and lot numbers. **Provided.**
5. All streets or roads and streams within seventy-five (75) feet of the subdivision. **Provided.**
6. Location of existing streets, and existing and proposed property lines, lot sizes, and areas. **Provided.**
7. Metes and bounds descriptions of all new lot and property lines. **Provided.**

T&M ASSOCIATES, 11 Tindall Road, Middletown, NJ 07748 P 732.671.6400 F 732.671.7365 W tandmassociates.com

Le: **Nancy Tran, Land Use Board Secretary**
Borough of Highlands Land Use Board

Re: **Home & Land Development Corp**
14 North Peak and 32 North Peak
Block 35, Lots 8 & 9
Single Family Residential (R-101) Zone
Minor Subdivision, Variance
First Completeness Review

8. Existence and location of any utility or other easement. **Not provided.**
9. Setback, sideline and rear yard distances and existing structures. **Provided.**
10. The name and address of the person preparing the plat, the graphic scale, date of preparation and reference meridian. **Provided.**
11. Certification from the Tax Collector that all taxes and assessments for local improvements on the property have been paid up to date. **Not provided.**
12. Certification statement for the required municipal signatures, stating: **Not Provided.**
    - Application No. _____ approved/disapproved by the Highlands Borough Planning Board/Board of Adjustment as a Minor Subdivision on _____.
      (date)

      _____
      Chairman

      _____
      Secretary
13. Certification statement for the County Planning Board approval / disapproval, if required. **Not applicable.**
14. Zone district boundary lines, if any, on or adjoining the property to be subdivided and a schedule indicating the required minimum lot area, lot width, lot depth and front, rear and side yards of each zone district located on the property. **Provided.**
15. A wetlands statement provided by a qualified expert. **Not provided.**
16. The Board reserves the right to require a feasible sketch plan layout of remaining land not being subdivided if it is deemed necessary. **The applicant has provided a generic house layout that demonstrates the sizes of proposed homes and the need for any additional setback relief.**
17. A lot grading plan, to be reviewed by the Borough Engineer, if required. **Provided.**

Several items noted above have not been submitted to the Board, and adequate information has not been provided in order to perform a technical review of the application. Therefore, this application is hereby deemed **INCOMPLETE** pending the submission of information to adequately address the above-referenced items noted as "partially provided" or "not provided", along with the following:

a. The plans show adjustments to the existing gutter and roadway within North Peak Street, including installation of a retaining wall and storm drainage improvements within the existing cartway area. It is unclear how the proposed lots will provide the required parking and access to the dwellings from the street. The layout as proposed may require variance relief and approval from the Governing Body.

b. It appears that the applicant has previously demolished structures on both lots and performed clearing and some grading. The limit of disturbance already performed should be shown on the plans.

Le: **Nancy Tran, Land Use Board Secretary**
Borough of Highlands Land Use Board

Re: **Home & Land Development Corp**
14 North Peak and 32 North Peak
Block 35, Lots 8 & 9
Single Family Residential (R-101) Zone
Minor Subdivision, Variance
First Completeness Review

c. The limit of grading/disturbance for the proposed improvements appears to comprise the entire property limits, including some off-tract elements.

d. The applicant also notes the installation of a retaining wall within the unnamed 10' right of way to the south of the tracts, with no limit of disturbance or grading shown. The applicant shall provide evidence regarding title to this right of way, and under what authority they propose to install said improvements.

e. It is my understanding that the prior dwelling on lot 9 utilized a septic system. The location and disposition of this should be shown on the plans.

f. It is presumed that the proposed dwellings will have to connect into the Borough's sanitary sewer system located in Valley Avenue. The applicant shall review and identify their proposed method of connection, which may involve use of the 10' right of way previously mentioned.

g. In addition to the above, the applicant shall identify means of utility connections for water and electric at a minimum, and identify their locations on the plans.

h. The applicant shall document compliance with the Steep Slope Ordinance found at 21-84.B and provide calculations as required therein. In addition, means and methods for controlling velocity and rate of stormwater runoff shall be documented.

Should you have any questions or require any additional information, please call.

Very truly yours,

T&M ASSOCIATES

Edward W. Herrman

EDWARD W. HERRMAN, P.E., P.P., C.M.E., C.F.M.
LAND USE BOARD ENGINEER

EWH:KJO:KFJ

cc: Michael Muscillo, Borough Administrator (mmuscillo@highlandsborough.org)
Ron Cucchiaro, Esq., Land Use Board Attorney (RCucchiaro@weiner.law)
Dustin Glass, Esq., Land Use Board Attorney (dglass@weiner.law)
Brian O'Callahan, Zoning Officer (bocallahan@middletownnj.org)
Home & Land Development Corp., Applicant (GNF718@aol.com)
Michael A. Bruno, Esq., Applicant's Attorney (mbruno@ghclaw.com)

YOUR GOALS. OUR MISSION.

HGPB- R1990
Nancy Tran, Land Use Board Secretary
Borough of Highlands Land Use Board
42 Shore Drive
Highlands, New Jersey 07732

January 5, 2023
Via Email (ntran@highlandsborough.org)

Re: Home & Land Development Corp
14 North Peak and 32 North Peak
Block 35, Lots 8 & 9
Single Family Residential (R-101) Zone
Minor Subdivision, Variance
Fee Determination

Dear Ms. Tran,

As requested, we have reviewed the above-referenced application in accordance with the Borough of Highlands Land Use Regulations Part 6 - Fee Schedule.

The applicant submitted the following documents in support of this application:

1. Land Use Board Application for Subdivision and Variance dated November 18, 2022.
2. Minor Subdivision Plan prepared by Thomas P. Santry, Jr., P.L.S., dated July 29, 2022, consisting of one (1) sheet.

Please note the following fee calculations:

1. **Application fee: $525.00**
2. **Escrow fee: $1,050.00**

The applicant shall post the balance of fees.

Should you have any questions or require any additional information, please call.

Very truly yours,

T&M ASSOCIATES

Edward W. Herrman

EDWARD W. HERRMAN, P.E., P.P., C.M.E., C.F.M.
LAND USE BOARD ENGINEER

EWH:KJO:KFJ

cc: Michael Muscillo, Borough Administrator (mmuscillo@highlandsborough.org)
Ron Cucchiaro, Esq., Land Use Board Attorney (RCucchiaro@weiner.law)
Brian O'Callahan, Zoning Officer (bocallahan@middletownnj.org)
Home & Land Development Corp., Applicant (GNF718@aol.com)
Michael A. Bruno, Esq., Applicant's Attorney (mbruno@ghclaw.com)

G:\Projects\HGPB\R1990\Correspondence\Tran_EWH_Home and Land Development Corp_Fee Letter.docx

T&M ASSOCIATES, 11 Tindall Road, Middletown, NJ 07748 P 732.671.6400 F 732.671.7365 W tandmassociates.com

HGPB-R1990

DETERMINATION OF FEES
Home & Land Development Corp - 14 North Peak and 32 North Peak
Block 35, Lot 8 & 9

A. APPLICATION FEES (Ord. 21-107)					
A. Variances					
3. Ord. 21-84.B (Steep Slopes & Slump Blocks)	1	EA	$ 125.00	$	125.00
B. Subdivisions					
2. Minor	1	EA	$ 400.00	$	400.00
B. ESCROW FEES (Ord. 21-108)					
B. Escrow Deposits (twice Application Fee; Minimum $750)	1	LS	$ 1,050.00	$	1,050.00
			Application fees subtotal	$	525.00
			Escrow fee subtotal	$	1,050.00
			Total	$	1,575.00

GIORDANO, HALLERAN & CIESLA

A PROFESSIONAL CORPORATION
ATTORNEYS AT LAW

EVAN P. ZIMMERMAN, ESQ.
SHAREHOLDER
EZIMMERMAN@GHCLAW.COM
DIRECT DIAL: (732) 219-5496

(732) 741-3900
FAX: (732) 224-6599

www.ghclaw.com

May 4, 2023

Client/Matter No. 13551-0023

Via Lawyers Service
Nancy Tran, Land Use Board Secretary
Borough of Highlands
42 Shore Drive
Highlands, New Jersey 07732

RE: Home & Land Development Corp
Minor Subdivision and Bulk Variance Relief
14 North Peak and 32 North Peak
Block 35, Lots 8 & 9 (the "Property")

Dear Ms. Tran:

This firm represents the applicant, Home & Land Development Corp with regard to the above application submitted on November 1, 2022.

In response to the first completeness review letter prepared by T & M Associates dated January 3, 2023, we hereby supplement our application to include the following:

1. Five (5) full size copies of the Minor Site Plan prepared by Thomas P. Santry, P.L.S. of Thomas P. Santry, P.A., Engineers and Surveyors dated July 29, 2022 consisting of three (3) sheets which now include the plans from Garden State Precast entitled "Stone Strong System – Gravity Retaining Wall Profile/Elevation/Plan Review "consisting of eight (8) sheets.

2. Tax Certifications for Block 35, Lots 8 and 9 dated May 4, 2023.

3. Tree Permit Application dated September 21, 2021 (Block 35, Lot 8) approved on September 27, 2021

4. Tree Permit Application dated September 21, 2021 (Block 35, Lot 9) approved on September 27, 2021

5. Application for Street Excavation Permit dated October 7, 2021

6. Freehold Soil Conservation District Project Exempt letter dated October 12, 2021

GIORDANO, HALLERAN & CIESLA
A PROFESSIONAL CORPORATION
ATTORNEYS AT LAW

Please advise the undersigned if you require any additional information.

Very truly yours,

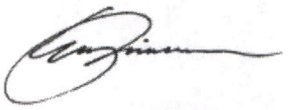

EVAN P. ZIMMERMAN

EVP/dw
Enclosures
cc: Charles Farkouh
Thomas P. Santry, P.L.S.
Michael Bruno, Esq.
Denise Wegryniak
Evan P. Zimmerman, Esq.

Docs #6234319-v1

NOTE: A WRITTEN "WAIVER AND DIRECTION NOT TO SET CORNER MARKERS" HAS BEEN OBTAINED FROM THE ULTIMATE USER PURSUANT TO N.J.A.C. 13:40-5.1(c).

THE INFORMATION SHOWN HEREON CORRECTLY REPRESENTS THE CONDITIONS FOUND AS, AND AS OF THE DATE OF THE FIELD SURVEY, EXCEPT SUCH IMPROVEMENTS OR EASEMENTS, IF ANY, BELOW THE SURFACE AND NOT VISIBLE

THIS SURVEY IS SUBJECT TO CHANGE ACCORDING TO THE FACTS THAT A CURRENT TITLE REPORT MAY DISCLOSE

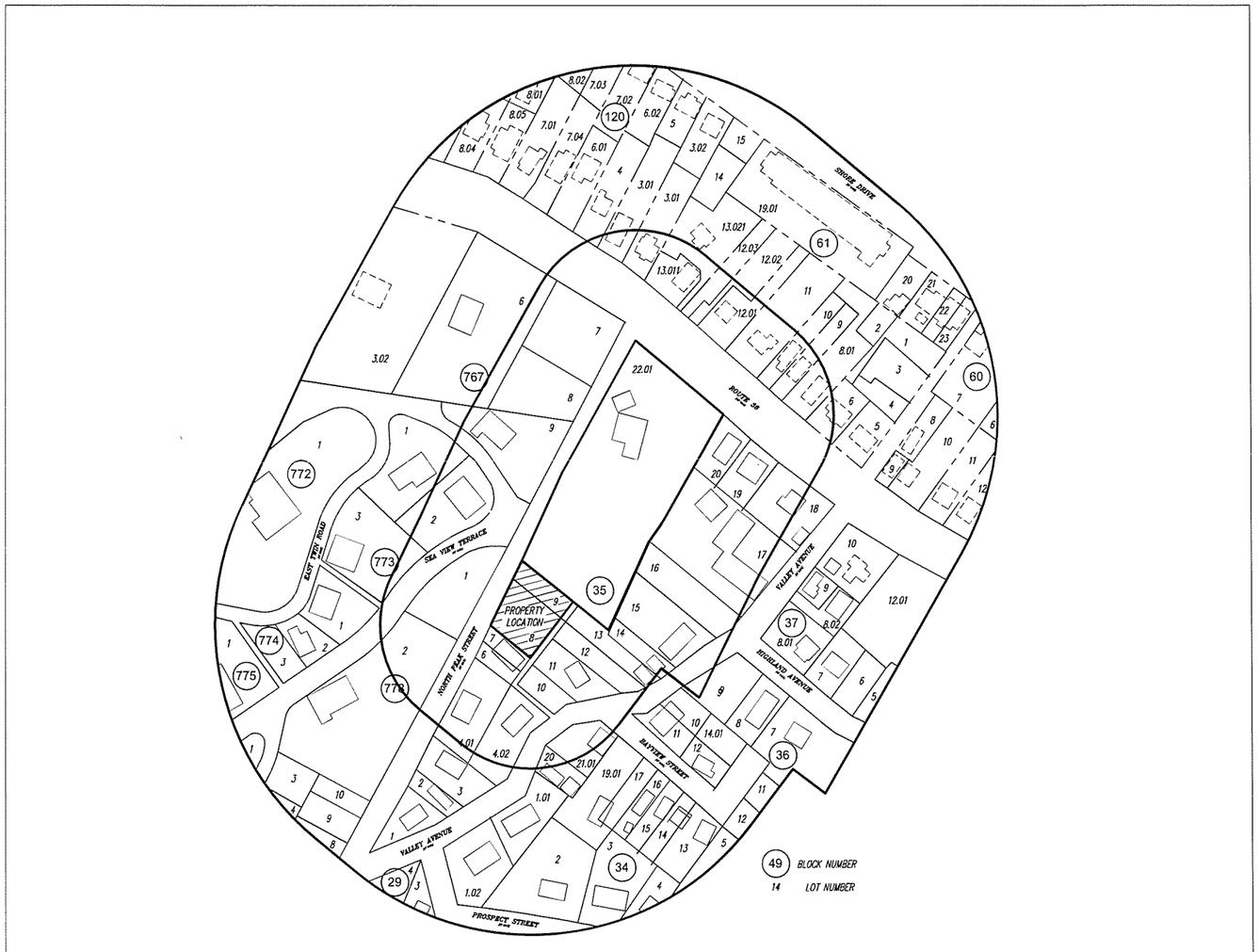

SCALE: 1"=100'
0 100 200 400 ft.

LIST OF OWNERS WITHIN 200 FEET			PROPERTY OWNER
BLOCK	LOT		
758	1.01		MONMOUTH HILLS INC. ACCESS PROP MGMT 1090 KING GEORGES POST RD EDISON, NJ 08837
778	1		MONMOUTH HILLS INC. ACCESS PROP MGMT 1090 KING GEORGES POST RD EDISON, NJ 08837
35	6		ALVATOR DONNA 10 NORTH PEAK STREET HIGHLANDS, NJ 07732
35	10		DORN JOSEPH & JOSEPH DORN LM 102 VALLEY AVENUE HIGHLANDS, NJ 07732
35	12		DORN JOSEPH & JOSEPH DORN LM 102 VALLEY AVENUE HIGHLANDS, NJ 07732
35	8		FELICIANO JERRY 202 W BROUGHTON SQUARE BOYNTON BEACH, FL 33436
35	14		NEWMAN SR. RONALD & NANCY 94 VALLEY AVENUE HIGHLANDS, NJ 07732
34	20		109 VSALLEY AVE LLC 12 JARED LANE LITTLE EGG HARBOR, NJ 08087
35	7		ALVATOR DONNA 10 NORTH PEAK STREET HIGHLANDS, NJ 07732
34	1.01		LEMEDA JERRY & NADIYA 111 VALLEY AVE HIGHLANDS, NJ 07732
34	21.01		WAGNER PETER 109 VALLEY AVENUE HIGHLANDS, NJ 07732
35	11		DORN JOSEPH & JOSEPH DORN 102 VALLEY AVENUE HIGHLANDS, NJ 07732
35	9		HOME & LAND DEVELOPMENT CORP 80-1 PORTLAND ROAD HIGHLANDS, NJ 07732
36	11		BRAHN GARY & PAMELA 97 VALLEY AVE HIGHLANDS, NJ 07732
35	13		SERGNS DEMETROUS 96 VALLEY AVENUE HIGHLANDS, NJ 07732

LIST OF OWNERS WITHIN 200 FEET (CONTINUED)			PROPERTY OWNER
BLOCK	LOT		
35	22.01		DIEBOLD HOWARD & WISCHELE 221 NAVESINK AVENUE HIGHLANDS, NJ 07732
35	4.02		MALONE PATRICK FRANCIS & PAULA ANN 110 VALLEY AVENUE HIGHLANDS, NJ 07732
35	15		AKER EDWARD W & EVELYN 92 VALLEY AVENUE HIGHLANDS, NJ 07732
767	9		FARROW LEONILDA A & CECIL W PO BOX 845 NAVESINK, NJ 07752
778	2		ONEIL MICHAEL & KATHY 34 SEAVIEW TERR HIGHLANDS, NJ 07732
774	1		MCALEVY COLLEEN FLYNN 38 E TWIN RD HIGHLANDS, NJ 07732
773	2		REINAKER CRAIG 32 SEAVIEW TERR HIGHLANDS NJ 07732
773	3		GLASS KEITH 37 E TWIN RD HIGHLANDS, NJ 07750
35	16		FENNOY KERRY & VALENCIA ENRIQUE 78 VALLEY AVE HIGHLANDS, NJ 07732
35	17		VALLEY AVENUE MANAGEMENT LLC 82 VALLEY AVENUE HIGHLANDS, NJ 07732
35	4.01		JOHNSON EDWARD W 2 NORTH PEAK STREET HIGHLANDS, NJ
773	1		PHAR ARTHUR II & KUKELMANN 36 E TWIN ROAD HIGHLANDS, NJ 07732
767	6		
61	10		
61	12.01		

UTILITY AND GOVERNMENTAL AGENCY TO BE NOTIFIED

JCP&L
300 MADISON AVENUE
PO BOX 1911
MORRISTOWN, NJ 07960

NEW JERSEY AMERICAN WATER COMPANY
ATTN: CONSTRUCTION DEPARTMENT
661 SHREWSBURY AVE
SHREWSBURY, NJ 07702

COMCAST COMMUNICATIONS OF MONMOUTH COUNTY
RON BERTRAND, CONSTRUCTION FOREMAN
403 SOUTH ST.
EATONTOWN, NJ 07724

VERIZON COMMUNICATIONS
ONE VERIZON WAY
BASKING RIDGE, NJ 07920

TOWNSHIP OF MIDDLETOWN SEWERAGE AUTHORITY
RAYMOND J. NIERSTEDT, P.E., EXECUTIVE DIRECTOR
PO POX 205, 100 BEVERLY WAY
BELFORD , NJ 07718

NJ NATURAL GAS COMPANY
PO BOX 1464, 1415 WYCKOFF ROAD
WALL, NJ 07719

MONMOUTH COUNTY BAYSHORE OUTFALL AUTHORITY
ATTN: EXECUTIVE DIRECTOR
PO BOX 184, 200 HARBOR WAY
BELFORD, NJ 07718

Application No. _____ approved/disapproved by the Highlands Borough Planning Board/Board of Adjustment as a Minor Subdivision on _____.
(date)

_____
Chairman

_____
Secretary

NO WETLANDS EXIST ON THIS PROPERTY.

I HEREBY CERTIFY THAT THIS IS A TRUE AND ACCURATE SURVEY MADE ON THE GROUND. THERE ARE NO ENCROACHMENTS EITHER WAY ACROSS PROPERTY LINES EXCEPT AS SHOWN

IF THIS DOCUMENT DOES NOT CONTAIN A RAISED IMPRESSION SEAL OF THE PROFESSIONAL IT IS NOT AN ORIGINAL

Rev. 5/1/23 Add Cert.

RESPONSIBLE PROFESSIONAL'S SIGNATURE DATE:
THOMAS P. SANTRY, JR., P.L.S.
PROFESSIONAL LAND SURVEYOR
P.L.S. LIC. No. 24GS3540000

MINOR SUBDIVISION OF LOTS 8 & 9 ~ BLOCK 35
32 & 14 North Peak Street
Borough of Highlands
Monmouth County, New Jersey

THOMAS P. SANTRY, P.A.
ENGINEERS AND SURVEYORS
ONE HUNDRED TWENTY EIGHT EAST RIVER ROAD
RUMSON, NEW JERSEY 07760
PHONE (732) 741-4800 FAX (732) 741-0084

PROJ. No. 22-074
SCALE 1" = 100'
DATE 7/29/22
DRAWN BY MCB
TAX MAP SHEET # 10
SHEET 1 OF 3
DRAWING No. HL254

COPYRIGHT - ALL RIGHTS RESERVED THE COPYING OR REUSE OF THIS DOCUMENT, OR PORTIONS THEREOF, FOR OTHER THAN THE ORIGINAL PROJECT OR THE PURPOSE ORIGINALLY INTENDED, WITHOUT THE WRITTEN PERMISSION OF THOMAS P. SANTRY, SURVEYING IS PROHIBITED

A:\AutoCAD\Land Projects 2018\22-074\22-074-24X36-sht1.dwg, 5/12/2023 2:26:06 PM, AutoCAD PDF (General Documentation).pc3

NOTE: A WRITTEN "WAIVER AND DIRECTION NOT TO SET CORNER MARKERS" HAS BEEN OBTAINED FROM THE ULTIMATE USER PURSUANT TO N.J.A.C. 13:40-5.1(g).

THE INFORMATION SHOWN HEREON CORRECTLY REPRESENTS THE CONDITIONS FOUND AT, AND AS OF THE DATE OF THE FIELD SURVEY, EXCEPT SUCH IMPROVEMENTS OR EASEMENTS, IF ANY, BELOW THE SURFACE AND NOT VISIBLE.

THIS SURVEY IS SUBJECT TO CHANGE ACCORDING TO THE FACTS THAT A CURRENT TITLE REPORT MAY DISCLOSE.

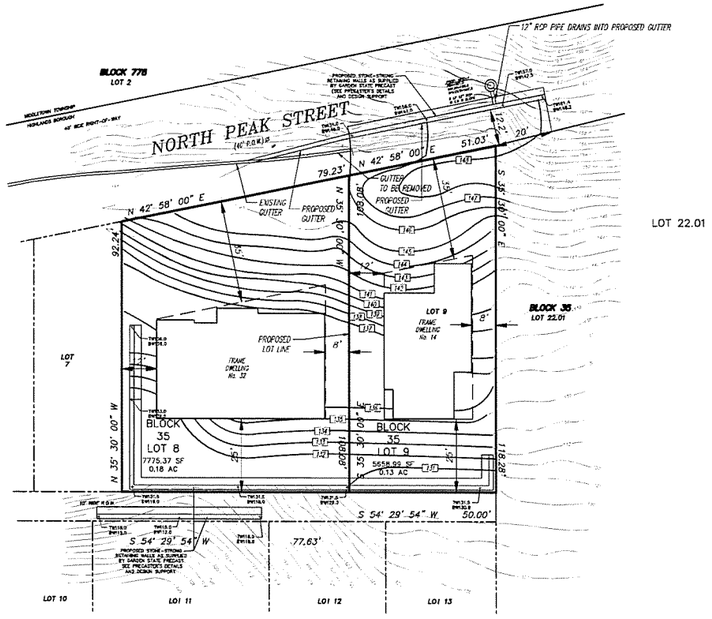
12" RCP PIPE DRAINS INTO PROPOSED GUTTER
BLOCK 778
LOT 2
NORTH PEAK STREET
(40' R.O.W.)±
WIDENING STRIP
HIGHLANDS BOROUGH
40' ROW RIGHT-OF-WAY
PROPOSED STEP-CRIB SEGMENTAL RETAINING WALL AS SUPPLIED BY GARDEN STATE PRECAST SEE MANUFACTURER'S DETAILS FOR DESIGN SUPPORT
GRADE BREAK
TW=8.5
BW=8.0
TW=8.5
BW=8.0
TW=8.5
BW=8.0

NOTE: A WRITTEN "WAIVER AND DIRECTION NOT TO SET CORNER MARKERS" HAS BEEN OBTAINED FROM THE ULTIMATE USER PURSUANT TO N.J.A.C. 13:40-5.1(c).

THE INFORMATION SHOWN HEREIN CORRECTLY REPRESENTS THE CONDITIONS FOUND AT, AND AS OF THE DATE OF THE FIELD SURVEY, EXCEPT SUCH IMPROVEMENTS OR EASEMENTS, IF ANY, BELOW THE SURFACE AND NOT VISIBLE

THIS SURVEY IS SUBJECT TO CHANGE ACCORDING TO THE FACTS THAT A CURRENT TITLE REPORT MAY DISCLOSE

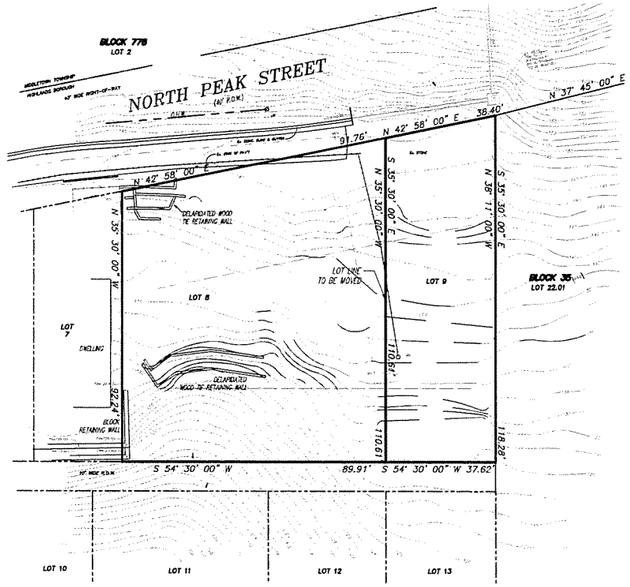

SCALE: 1"=20'
0 20 40 80 ft.

NO DETERMINATION HAS BEEN MADE AS TO THE PRESENCE OR ABSENCE OF WETLANDS ON THIS PROPERTY. NO STATEMENT IS BEING MADE OR IMPLIED HEREIN, NOR SHOULD IT BE CONSTRUED THAT ANY STATEMENT IS BEING MADE BY THE FACT THAT NO EVIDENCE OF THE SAME IS PORTRAYED HEREIN.

I HEREBY CERTIFY THAT THIS IS A TRUE AND ACCURATE SURVEY MADE ON THE GROUND. THERE ARE NO ENCROACHMENTS EITHER WAY ACROSS PROPERTY LINES EXCEPT AS SHOWN

IF THIS DOCUMENT DOES NOT CONTAIN A RAISED IMPRESSION SEAL OF THE PROFESSIONAL IT IS NOT AN ORIGINAL

Rev. 5/1/23 Add Wall

RESPONSIBLE PROFESSIONAL'S SIGNATURE DATE:
THOMAS P. SANTRY, JR., P.L.S.
PROFESSIONAL LAND SURVEYOR
P.L.S. LIC. No. 24GS3540000

MINOR SUBDIVISION OF LOTS 8 & 9 ~ BLOCK 35

32 & 14 North Peak Street
Borough of Highlands
Monmouth County, New Jersey

FIELD BK	22-074
SCALE	1" = 20'
DATE	7/25/22
DRAWN BY	MGB
TAX MAP SHEET #	10
SHEET	2 of 3
DRAWING No.	HL254

THOMAS P. SANTRY, P.A.
ENGINEERS AND SURVEYORS
ONE HUNDRED TWENTY EIGHT EAST RIVER ROAD
RUMSON, NEW JERSEY 07760
PHONE (732) 741-4800 FAX (732) 741-0084

COPYRIGHT - ALL RIGHTS RESERVED THE COPYING OR REUSE OF THIS DOCUMENT, OR PORTIONS THEREOF, FOR OTHER THAN THE ORIGINAL PROJECT ON THE PURPOSE ORIGINALLY INTENDED, WITHOUT THE WRITTEN PERMISSION OF THOMAS P. SANTRY, SURVEYING IS PROHIBITED

A:\AutoCAD\Land Projects 2018\22-074\22-074-24X36-sht2.dwg, 5/12/2023 2:28:14 PM, AutoCAD PDF (General Documentation).pc3

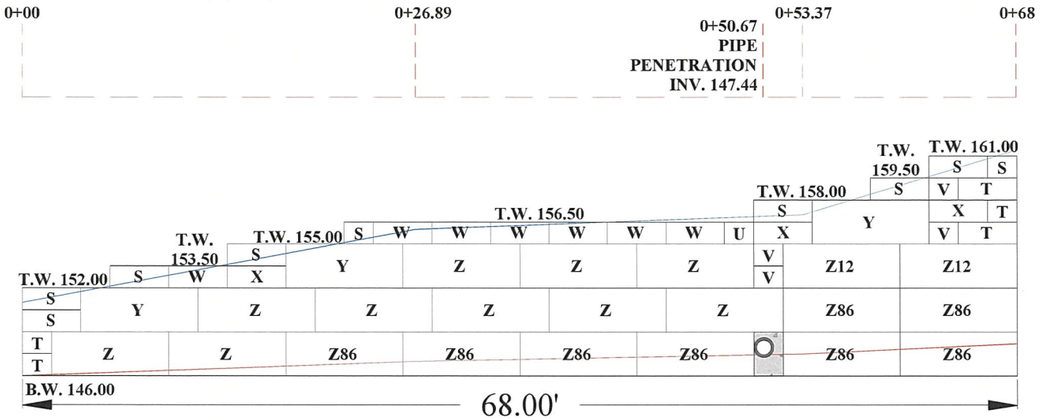

PROFILE VIEW-WALL 1

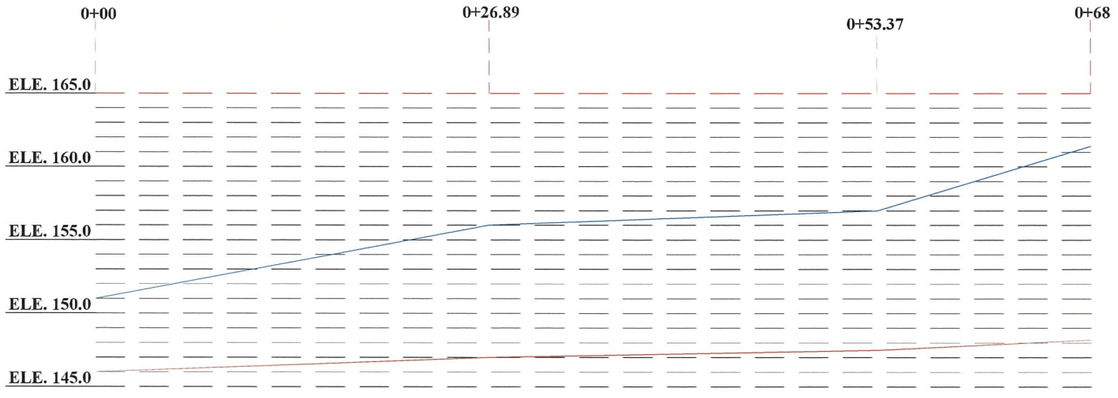

ELEVATION VIEW-WALL 1

WALL 1 -BLOCK TABLE		
BLOCK	SF	QUANTITY
Z	24	10
Z12	24	2
Z86	24	8
Y	24	3
X	6	3
W	6	7
S	9	9
T	6	5
V	3	4
U	3	1

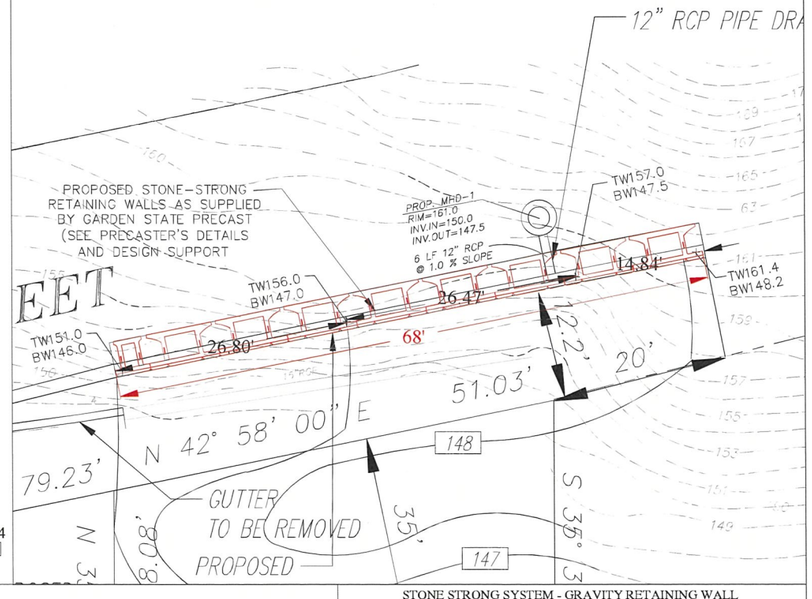

4 0 4

SCALE: 1"=4'

PLEASE NOTE DRAWING IS STAMPED BY PE AND SLIGHT MODIFICATIONS MAY OCCUR IN PE REVIEW

DESCRIPTION	DWG. NO.	APP. DATE
NEW SURVEY DATA	R4	12/15/21
COMPILED DRAWINGS	R3	11/15/21
CONFIRMED LAYOUT	R2	11/12/21

REVISION TO DRAWINGS

STONE STRONG SYSTEM - GRAVITY RETAINING WALL
PROFILE / ELEVATION/ PLAN VIEW- WALL 1
HOME & LAND DEVELOPMENT
NORTH PEAK STREET
#21-54385

GARDEN STATE PRECAST
P.O. BOX 702
FARMINGDALE, NJ 07727
732-938-4436
732-938-7096 - FAX

SHEET 1 OF 8

WALL 2 - BLOCK TABLE		
BLOCK	SF	QUANTITY
Y	24	**15**
Z	24	**29**
X	6	**14**
W	6	**11**
Z12	24	**8**
Z86	24	**12**
S	9	**7**
U	3	**4**
C	6	**13**
V	3	**1**

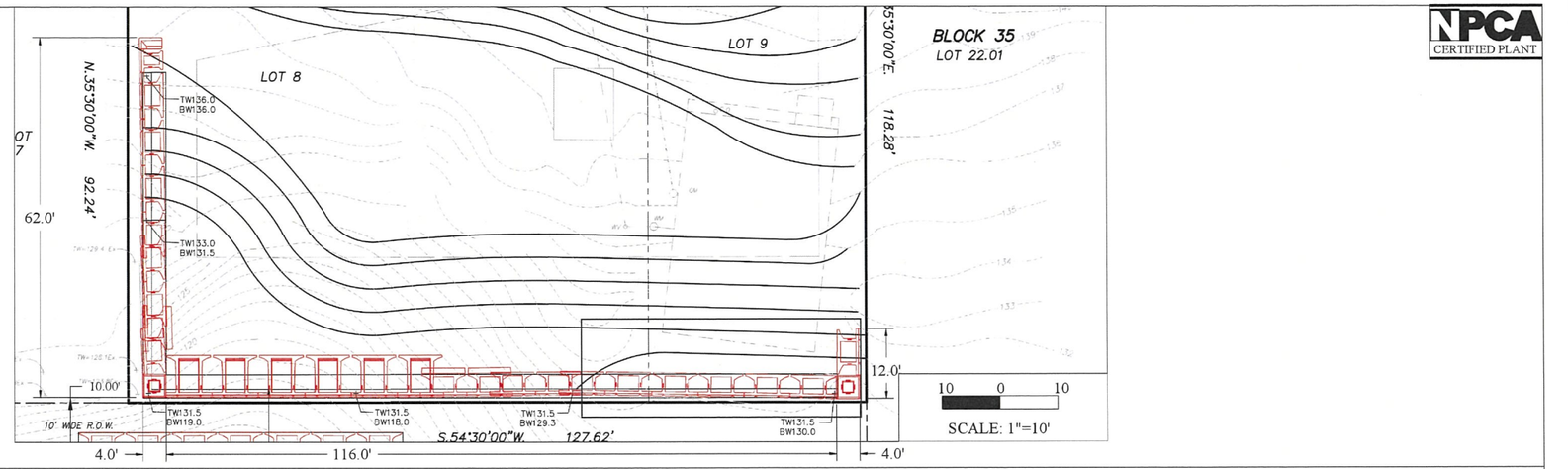

NPCA CERTIFIED PLANT

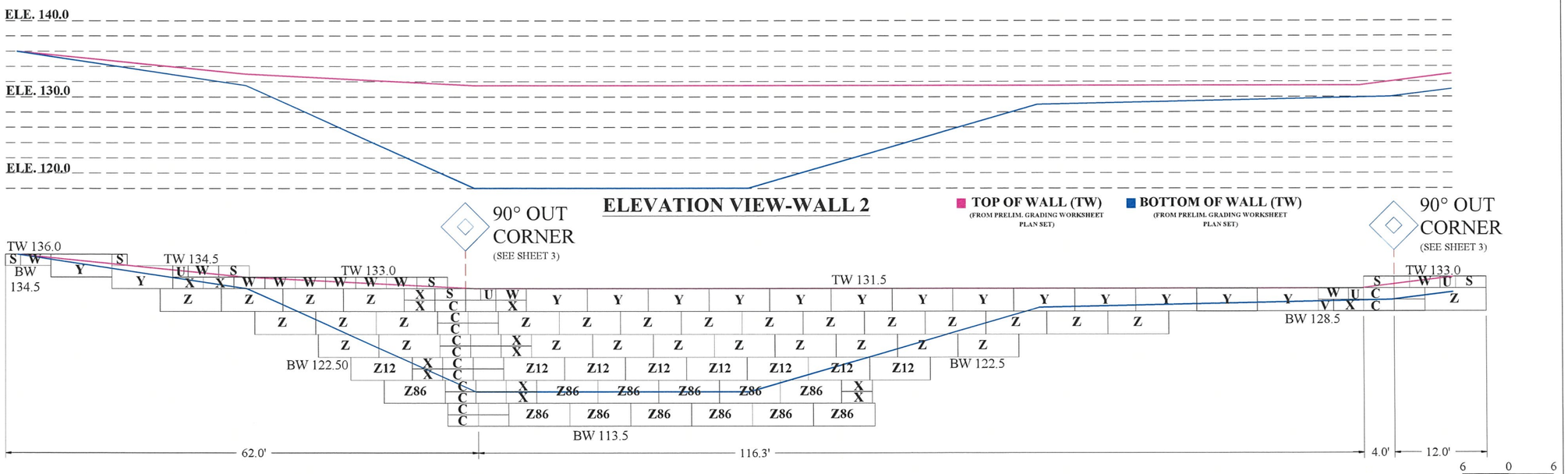

Garden State PRECAST INC

PLEASE NOTE DRAWING IS STAMPED BY PE AND SLIGHT MODIFICATIONS MAY OCCUR IN PE REVIEW

REVISION TO DRAWINGS		
DESCRIPTION	DWG. NO.	APP. DATE
EXTENDED WALL	R1	11/5/21
CONFIRMED LAYOUT	R2	11/12/21
COMPILED DRAWINGS	R3	11/15/21
NEW SURVEY DATA	R4	12/15/21
NEW SURVEY DATA	R5	01/16/23

STONE STRONG SYSTEM - GRAVITY RETAINING WALL
PROFILE / ELEVATION/ PLAN VIEW- WALL 2
HOME & LAND DEVELOPMENT
NORTH PEAK STREET
#21-54385

GARDEN STATE PRECAST
P.O. BOX 702
FARMINGDALE, NJ 07727
732-938-4436
732-938-7096 - FAX

SHEET 2 OF 8

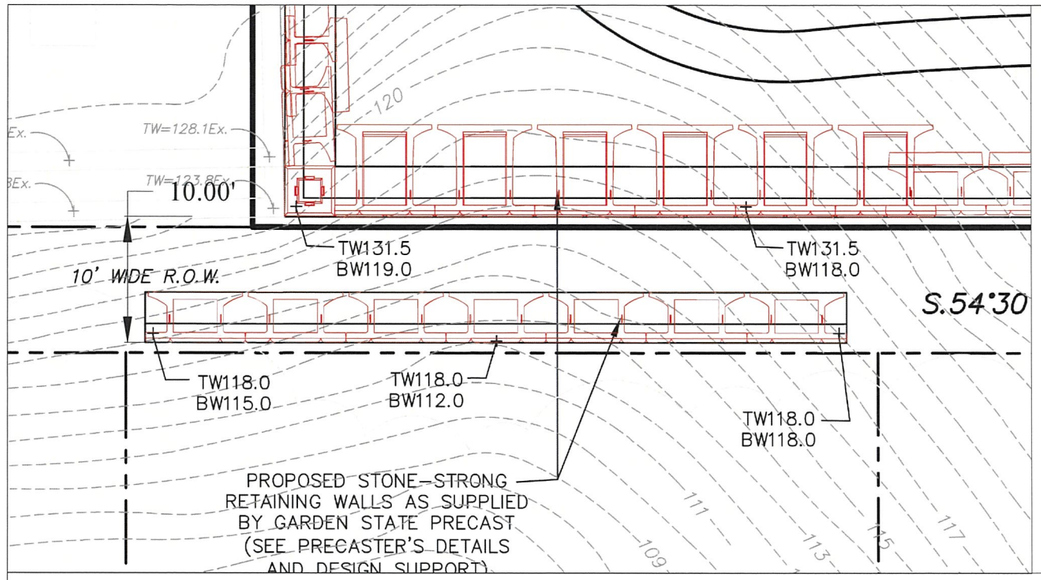

WALL 3 -BLOCK TABLE		
BLOCK	SF	QUANTITY
Z	24	10
X	6	4
S	9	2
T	6	1
V	3	1
W	6	11
U	3	2

NPCA CERTIFIED PLANT

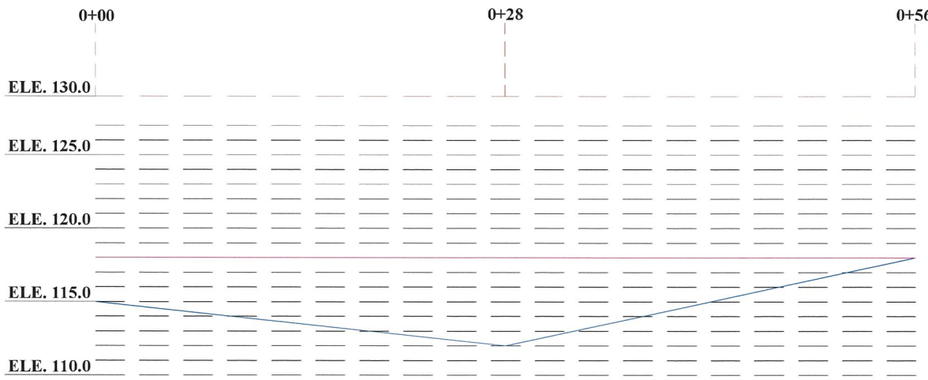

ELEVATION VIEW-WALL 1

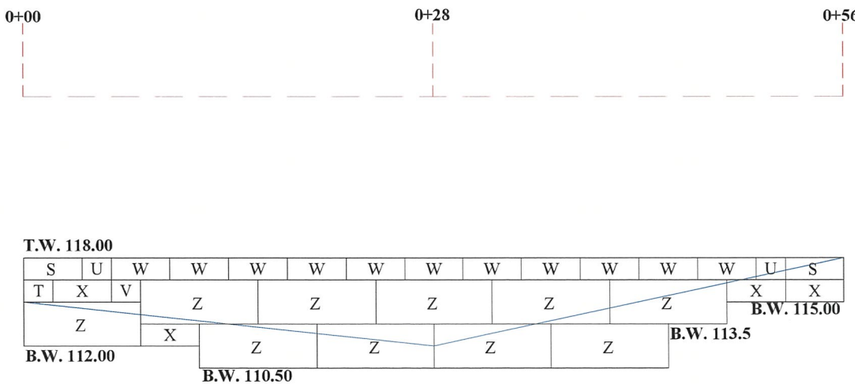

PROFILE VIEW-WALL 1

TOP OF WALL (TW)
(FROM PRELIM. GRADING WORKSHEET PLAN SET)

BOTTOM OF WALL (TW)
(FROM PRELIM. GRADING WORKSHEET PLAN SET)

4 0 4
SCALE: 1"=4'

Garden State PRECAST INC

PLEASE NOTE DRAWING IS STAMPED BY PE AND SLIGHT MODIFICATIONS MAY OCCUR IN PE REVIEW

DESCRIPTION	DWG. NO.	APP. DATE
NEW SURVEY DATA	R5	1/16/23
NEW SURVEY DATA	R4	12/15/21
COMPILED DRAWINGS	R3	11/15/21
CONFIRMED LAYOUT	R2	11/12/21

REVISION TO DRAWINGS

STONE STRONG SYSTEM - GRAVITY RETAINING WALL
PROFILE / ELEVATION/ PLAN VIEW- WALL 3
HOME & LAND DEVELOPMENT
NORTH PEAK STREET
#21-54385

GARDEN STATE PRECAST
P.O. BOX 702
FARMINGDALE, NJ 07727
732-938-4436
732-938-7096 - FAX

NPCA CERTIFIED PLANT

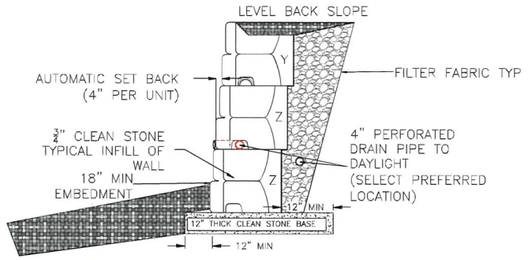

1.5–9.0 VF GRAVITY WALL
CROSS SECTION

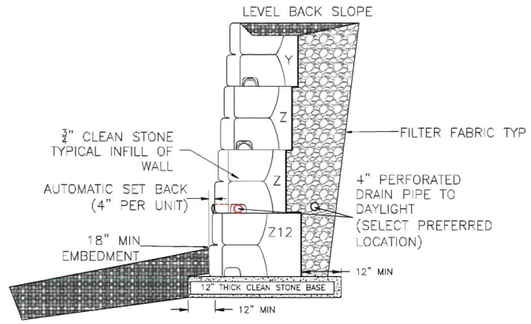

10.5–12.0 VF GRAVITY WALL
CROSS SECTION

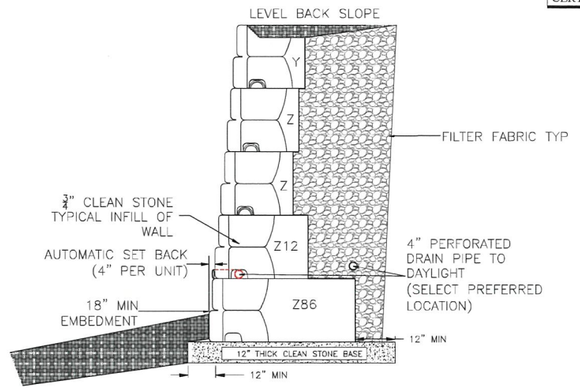

13.5–15.0 VF GRAVITY WALL
CROSS SECTION

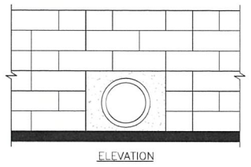

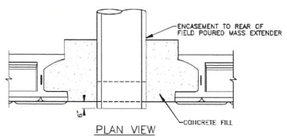

PIPE PENETRATION DETAIL
NOT TO SCALE

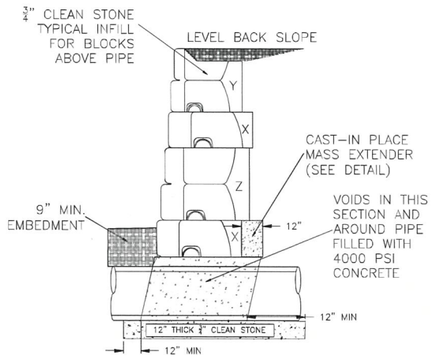

PIPE PENETRATION CROSS SECTION

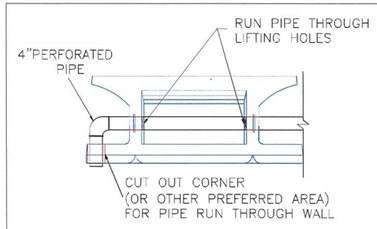

4" PERFORATED PIPE TO DAYLIGHT DETAIL

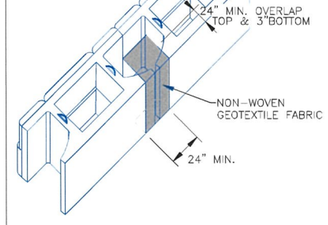

FILTER FABRIC DETAIL

Garden State PRECAST INC

PLEASE NOTE DRAWING IS STAMPED BY PE AND SLIGHT MODIFICATIONS MAY OCCUR IN PE REVIEW

SCALE: NTS

DESCRIPTION	DWG. NO.	APP. DATE
NEW SURVEY DATA	R5	01/16/23
NEW SURVEY DATA	R4	12/15/21
COMPILED DRAWINGS	R3	11/15/21
CONFIRMED LAYOUT	R2	11/12/21
EXTENDED WALL	R1	11/5/21

REVISION TO DRAWINGS

SECTION DETAILS FOR WALL 1 AND WALL 2

STONE STRONG SYSTEM - GRAVITY RETAINING WALL

HOME & LAND DEVELOPMENT
NORTH PEAK STREET
#21-54385

GARDEN STATE PRECAST
P.O. BOX 702
FARMINGDALE, NJ 07727
732-938-4436
732-938-7096 - FAX

NPCA CERTIFIED PLANT

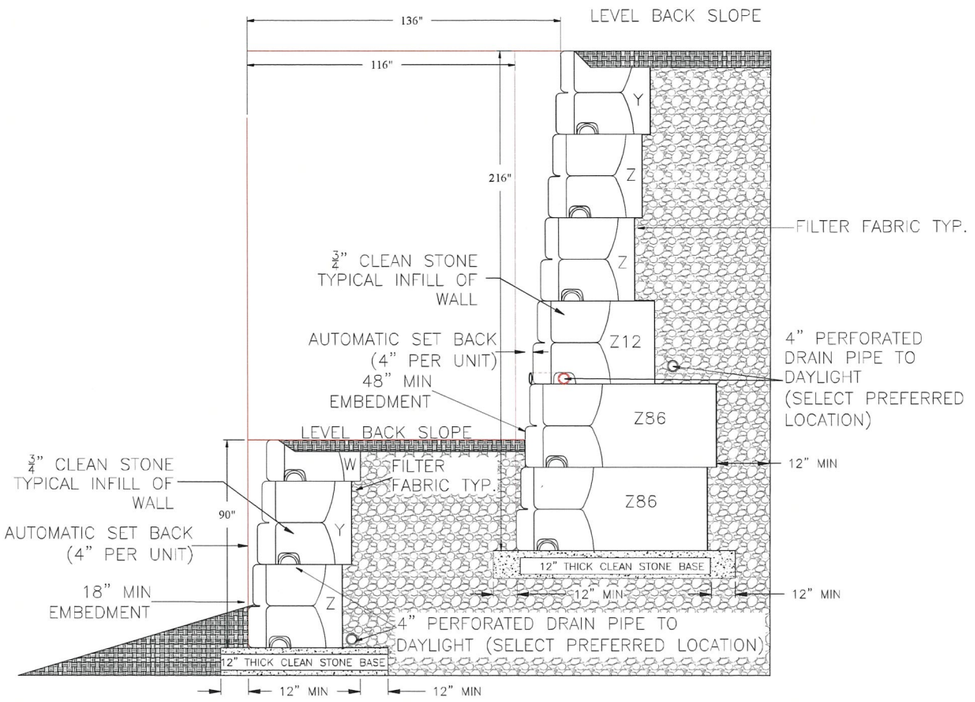

7.5 TO 18.0 VF TIERED GRAVITY WALL
CROSS SECTION

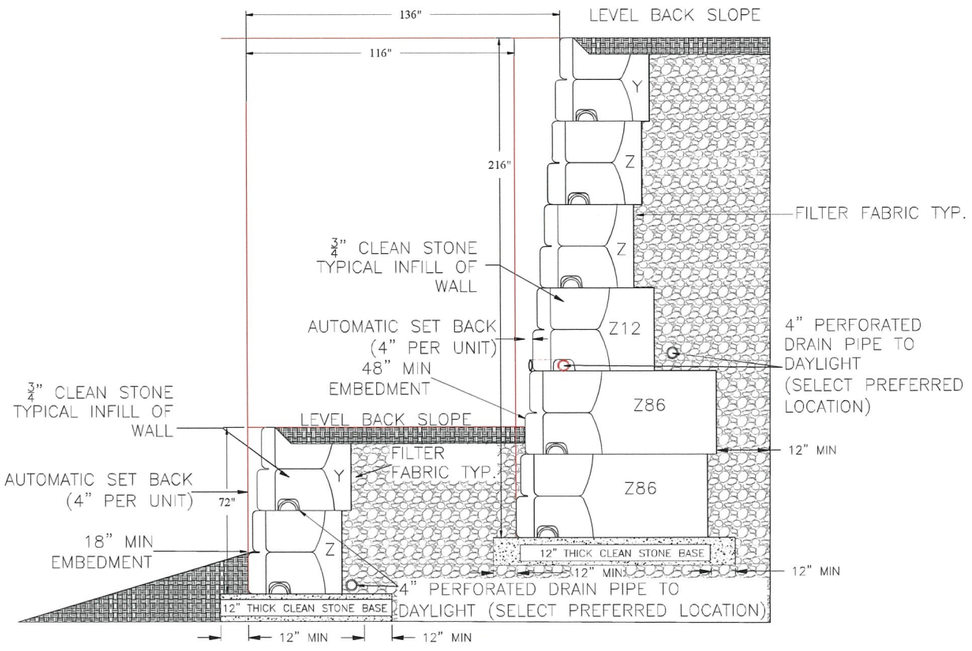

6 TO 18.0 VF TIERED GRAVITY WALL
CROSS SECTION

Garden State PRECAST INC

PLEASE NOTE DRAWING IS STAMPED BY PE AND SLIGHT MODIFICATIONS MAY OCCUR IN PE REVIEW

SCALE: NTS

DESCRIPTION	DWG. NO.	APP. DATE
NEW SURVEY DATA	R5	01/16/23
NEW SURVEY DATA	R4	12/15/21
COMPILED DRAWINGS	R3	11/15/21
CONFIRMED LAYOUT	R2	11/12/21
EXTENDED WALL	R1	11/5/21

REVISION TO DRAWINGS

SECTION DETAILS FOR WALL 2 AND WALL 3

STONE STRONG SYSTEM - GRAVITY RETAINING WALL

HOME & LAND DEVELOPMENT
NORTH PEAK STREET
#21-54385

GARDEN STATE PRECAST
P.O. BOX 702
FARMINGDALE, NJ 07727
732-938-4436
732-938-7096 - FAX

SHEET 5 OF 8

NOTE: TIEBACK RECOMMENDED FOR CORNERS 12' AND TALLER, INSTALL TIE BACK EVERY 3' VERTICALLY STARTING AT 3' ABOVE THE BASE.

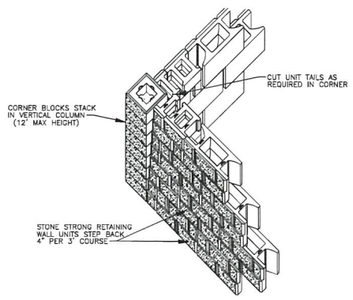

OUTSIDE 90° CORNER—PERSPECTIVE VIEW
NOT TO SCALE

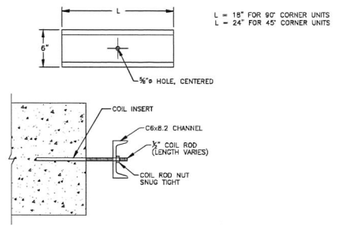

TIEBACK PLATE ASSEMBLY
NOT TO SCALE

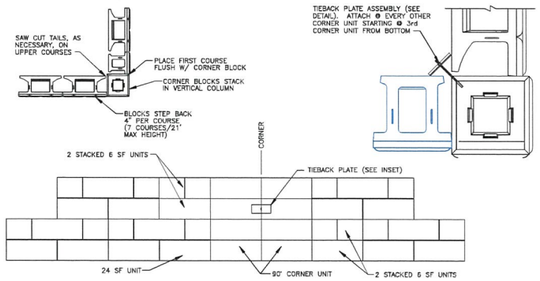

OUTSIDE 90° CORNER
NOT TO SCALE

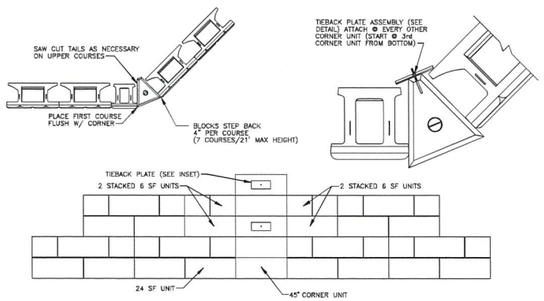

OUTSIDE 45° CORNER
NOT TO SCALE

OUTSIDE 45°/90° CORNER DETAIL

NPCA CERTIFIED PLANT

Garden State PRECAST INC

PLEASE NOTE DRAWING IS STAMPED BY PE AND SLIGHT MODIFICATIONS MAY OCCUR IN PE REVIEW

SCALE: NTS

DESCRIPTION	DWG. NO.	APP. DATE
NEW SURVEY DATA	R5	01/16/23
NEW SURVEY DATA	R4	12/15/21
COMPILED DRAWINGS	R3	11/15/21
CONFIRMED LAYOUT	R2	11/12/21
EXTENDED WALL	R1	11/5/21

REVISION TO DRAWINGS

MISC. DETAILS FOR WALL1/ 2

STONE STRONG SYSTEM - GRAVITY RETAINING WALL

HOME & LAND DEVELOPMENT
NORTH PEAK STREET
#21-54385

GARDEN STATE PRECAST
P.O. BOX 702
FARMINGDALE, NJ 07727
732-938-4436
732-938-7096 - FAX

SHEET 6 OF 8

NPCA CERTIFIED PLANT

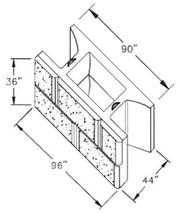

STONE STRONG
(Z)24 SF UNIT

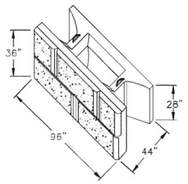

STONE STRONG
(Y)24 SF TOP UNIT

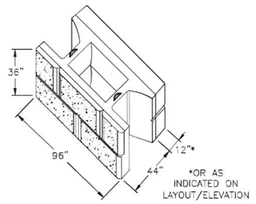

STONE STRONG
(Z12) 24 SF MASS
EXTENDER UNIT

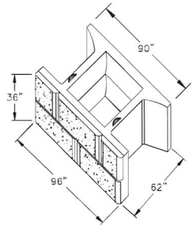

STONE STRONG
(Z62) 24 SF – 62 UNIT

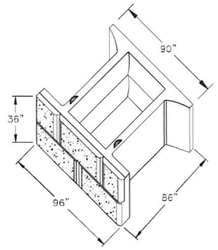

STONE STRONG
(Z86)24 SF – 86 UNIT

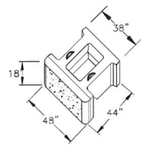

STONE STRONG
(X)6 SF UNIT

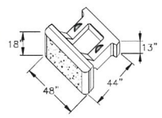

STONE STRONG
(W)6 SF TOP UNIT

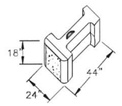

STONE STRONG
(V)3 SF UNIT

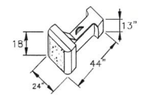

STONE STRONG
(U)3 SF TOP UNIT

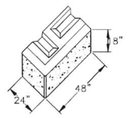

STONE STRONG
(T)END UNIT

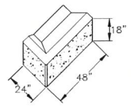

STONE STRONG
(S) TOP END UNIT

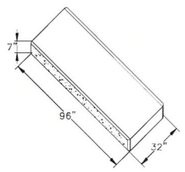

STONE STRONG
(P)CAP STEP BLOCK

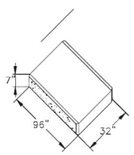

STONE STRONG
(P5)CAP STEP HALF BLOCK

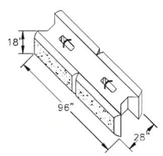

STONE STRONG
(Q)DUAL FACE UNIT

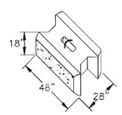

STONE STRONG
(Q5)DUAL FACE HALF UNIT

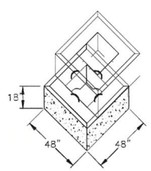

STONE STRONG
(C)90° CORNER UNIT

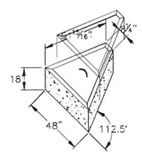

STONE STRONG
(R)45° CORNER UNIT

COMPONENT DATA

COMPONENT	BLOCK WEIGHT	CONCRETE VOLUME	ROCK IN-FILL
24 SF(Z)	6000 LB	1.50 CU YARDS	1.70 CU YARDS
24 SF TOP(Y)	5,400 LB	1.35 CU YARDS	1.50 CU YARDS
24 SF MASS EXTENDER(Z12)	10,000 LB	2.5 CU YARDS	1.70 CU YARDS
24 SF -62 UNIT(Z62)	6,600 LB	1.65 CU YARDS	2.81 CU YARDS
24 SF -86 UNIT(Z86)	7,400 LB	1.85 CU YARDS	4.27 CU YARDS
6 SF(X)	1,600 LB	0.37 CU YARDS	0.33 CU YARDS
6 SF TOP (W)	1,400 LB	0.35 CU YARDS	0.31 CU YARDS
3 SF(V)	800 LB	0.20 CU YARDS	0.17 CU YARDS
3 SF TOP(U)	720 LB	0.18 CU YARDS	0.16 CU YARDS
END UNIT(T)	1,500 LB	0.37 CU YARDS	0.00 CU YARDS
END UNIT TOP(S)	1,412 LB	0.35 CU YARDS	0.00 CU YARDS
CAP/STEP UNIT(P)	1,600 LB	0.40 CU YARDS	0.00 CU YARDS
CAP/STEP HALF UNIT(P5)	800 LB	0.20 CU YARDS	0.00 CU YARDS
DUAL FACE UNIT(Q)	3,520 LB	0.88 CU YARDS	0.00 CU YARDS
DUAL FACE HALF UNIT(Q5)	1,760 LB	0.44 CU YARDS	0.00 CU YARDS
90 DEGREE CORNER UNIT(C)	2,600 LB	0.65 CU YARDS	0.10 CU YARDS
45 DEGREE CORNER UNIT(R)	2,000 LB	0.50 CU YARDS	0.00 CU YARDS

Garden State PRECAST INC

PLEASE NOTE DRAWING IS STAMPED BY PE AND SLIGHT MODIFICATIONS MAY OCCUR IN PE REVIEW

DESCRIPTION	DWG. NO.	APP. DATE
NEW SURVEY DATA	R5	01/16/23
NEW SURVEY DATA	R4	12/15/21
COMPILED DRAWINGS	R3	11/15/21
CONFIRMED LAYOUT	R2	11/12/21
EXTENDED WALL	R1	11/5/21

SUPPLEMENTAL DRAWINGS

BLOCK REFERENCE

STONE STRONG SYSTEM - GRAVITY RETAINING WALL

HOME & LAND DEVELOPMENT
NORTH PEAK STREET
#21-54385

GARDEN STATE PRECAST
P.O. BOX 702
FARMINGDALE, NJ 07727
732-938-4436
732-938-7096 - FAX

SHEET 7 OF 8

STONE STRONG SYSTEMS
SPECIFICATIONS FOR PRECAST MODULAR BLOCK RETAINING WALL SYSTEM

NPCA CERTIFIED PLANT

PART 1: GENERAL
1.01 DESCRIPTION
- A. WORK INCLUDES FURNISHING AND INSTALLING PRECAST MODULAR BLOCKS (PMB) TO THE LINES AND GRADES SHOWN ON THE PLANS AND AS SPECIFIED HEREIN. ALSO INCLUDED IS FURNISHING AND INSTALLING APPURTENANT MATERIALS REQUIRED FOR CONSTRUCTION OF THE COMPLETE SYSTEM.
- B. THE CONTRACTOR IS SOLELY RESPONSIBLE FOR SAFETY. THE ARCHITECT/ENGINEER AND OWNER SHALL NOT BE RESPONSIBLE FOR MEANS OR METHODS OF CONSTRUCTION OR FOR SAFETY OF WORKERS OR OF THE PUBLIC.

1.02 REFERENCES
- A. ASTM C39 – STANDARD TEST METHOD FOR COMPRESSIVE STRENGTH OF CYLINDRICAL CONCRETE SPECIMENS.
- B. ASTM C136 – STANDARD TEST METHOD FOR SIEVE ANALYSIS OF FINE AND COARSE AGGREGATE.
- C. ASTM D4318 – STANDARD TEST METHOD FOR LIQUID LIMIT, PLASTIC LIMIT, AND PLASTICITY INDEX OF SOILS.
- D. ASTM D698 – STANDARD TEST METHOD FOR LABORATORY COMPACTION CHARACTERISTICS OF SOIL USING STANDARD EFFORT.
- E. ASTM D4595 – STANDARD TEST METHOD FOR TENSILE PROPERTIES OF GEOTEXTILES BY THE WIDE-WIDTH STRIP METHOD.
- F. ASTM D5262 – STANDARD TEST METHOD FOR EVALUATING THE UNCONFINED CREEP BEHAVIOR OF GEOSYNTHETICS.
- G. ASTM D4632 – STANDARD TEST METHOD FOR GRAB BREAKING LOAD AND ELONGATION OF GEOTEXTILES.
- H. ASTM D6638 – STANDARD TEST METHOD FOR DETERMINING CONNECTION STRENGTH BETWEEN GEOSYNTHETIC REINFORCEMENT AND SEGMENTAL CONCRETE UNITS (MODULAR CONCRETE BLOCKS).
- I. ASTM D6916 – STANDARD TEST METHOD FOR DETERMINING THE SHEAR STRENGTH BETWEEN SEGMENTAL CONCRETE UNITS.
- J. AASHTO – STANDARD SPECIFICATIONS FOR HIGHWAY BRIDGES.
- K. NCMA – "DESIGN MANUAL FOR SEGMENTAL RETAINING WALLS".

1.04 DELIVERY, STORAGE, AND HANDLING
- A. CONTRACTOR SHALL CHECK THE MATERIALS UPON DELIVERY TO ASSURE THAT PROPER MATERIALS HAVE BEEN RECEIVED.
- B. CONTRACTOR SHALL PROTECT THE MATERIALS FROM DAMAGE. DAMAGED MATERIAL SHALL NOT BE INCORPORATED INTO THE WALL OR THE REINFORCED SOIL EMBANKMENTS.
- C. CONTRACTOR SHALL PREVENT EXCESSIVE MUD, CONCRETE, ADHESIVES AND OTHER SUBSTANCES THAT MAY ADHERE FROM COMING IN CONTACT WITH THE MATERIALS.
- D. EXPOSED FACES OF SEGMENTAL UNITS SHALL BE REASONABLY FREE OF CHIPS, CRACKS, OR STAINS.

1.05 QUALITY ASSURANCE
- A. OWNER SHALL EMPLOY SERVICES OF A MATERIAL ENGINEERING FIRM TO PROVIDE QUALITY CONTROL TESTING DURING EMBANKMENT CONSTRUCTION.

1.06 DESIGN SPECIFICATIONS FOR THE STONE STRONG RETAINING WALL SYSTEM
- A. THE STONE STRONG RETAINING WALL SYSTEM DESIGN CONSULTANT TAKES RESPONSIBILITY FOR THE ENGINEERING THEORY, CALCULATIONS, AND ENSURING ALL DESIGN ASSUMPTIONS ARE VALIDATED IN THE CONTRACT DOCUMENTS: EITHER BY NEEDED DETAILS OR CONSTRUCTION SPECIFICATIONS.
- B. THE PROJECT ENGINEER OF RECORD FOR THE PROJECT IS RESPONSIBLE FOR VERIFYING SOIL ASSUMPTIONS USED IN DESIGN PRIOR TO PRODUCTION.

GENERAL

.

PROVIDE THE FOLLOWING FACTORS OF SAFETY:

SLIDING	> OR EQUAL TO 1.5
OVERTURNING	> OR EQUAL TO 1.5
BEARING CAPACITY	> OR EQUAL TO 2.0
ALLOWABLE DIFFERENTIAL SETTLEMENT	

THE STONE STRONG RETAINING WALL SYSTEM MINIMUM RADIUS AND SPECIAL TURNING BLOCKS4:

CONCAVE APPLICATIONS	16' RADIUS
CONVEX APPLICATIONS	20' RADIUS
45 DEGREE BLOCK	45 DEGREES
90 DEGREE BLOCK	90 DEGREES

PART 2: MATERIALS
2.01 WALL UNITS
- A. A. PRECAST MODULAR BLOCKS SHALL BE STONE STRONG UNITS MANUFACTURED UNDER LICENSE FROM STONE STRONG, LLC.
- B. CONCRETE FOR PRECAST MODULAR BLOCKS SHALL HAVE A MINIMUM 28-DAY COMPRESSIVE STRENGTH OF 4,000 PSI. ENTRAINED AIR CONTENT SHALL BE BETWEEN 5 AND 7%.
- C. REINFORCING STEEL (IF USED) SHALL BE GRADE 60. MINIMUM CLEAR COVER TO REINFORCEMENT SHALL BE 1½ INCHES.
- D. THE FACE PATTERN SHALL BE SELECTED FROM THE MANUFACTURER'S STANDARD MOLDS. THE COLOR OF THE UNITS SHALL BE NATURAL GRAY. A CONCRETE STAIN MAY BE FIELD APPLIED TO COLOR THE UNITS IF SPECIFIED BY THE ARCHITECT/ENGINEER OR OWNER.

2.02 GEOGRID
- A. IF GEOGRID REINFORCEMENT IS REQUIRED, IT SHALL BE AS SHOWN IN THE PLANS OR AS DETAILED IN THE SHOP DRAWINGS. SUBSTITUTION OF A DIFFERENT TYPE OF GEOGRID SHALL NOT BE ALLOWED UNLESS APPROVED OF THE ARCHITECT/ENGINEER OR OWNER AFTER SUBMITTAL OF SHOP DRAWINGS AND TEST DATA.

2.03 WALL BASE
- ¾" CLEAN STONE MATERIAL FOR WALL BASE

2.04 UNIT FILL
- A. UNIT FILL SHALL BE A CLEAN COARSE AGGREGATE WITH HIGH ANGULARITY. THE UNIT FILL SHALL BE SCREENED 100 PERCENT CRUSHED AGGREGATE MEETING THE FOLLOWING GRADATION:

US STANDARD SIEVE SIZE	PERCENT PASSING
1-1/2"	100
3/4"	60-100
#4	0-40
#200	0-5

2.05 BACKFILL
- A. PROVIDE BACKFILL PER PHI ANGLE IN DESIGN CALCULATIONS

2.06 DRAIN TILE
- A. DRAIN TILE SHALL BE USED IF SHOWN ON THE PLANS OR IF INDICATED BY LOCAL PRACTICES AND CONDITIONS. IF USED, THE DRAIN TILE SHOULD BE A PERFORATED OR SLOTTED PVC OR CORRUGATED HDPE PIPE. THE DRAIN TILE SHOULD BE CONNECTED TO STORM DRAINS OR DAYLIGHTED AT LOW POINTS AND/OR PERIODICALLY ALONG THE WALL ALIGNMENT.

2.07 GEOTEXTILE FABRIC
- A. IF SHOWN ON THE PLANS OR THE SHOP DRAWINGS, PROVIDE A GEOTEXTILE FILTER FOR SEPARATION FROM BACKFILL AT THE TAILS OF THE BLOCKS. THE GEOTEXTILE SHALL BE A NEEDLE PUNCHED NONWOVEN FABRIC WITH A MINIMUM GRAB TENSILE STRENGTH OF 120 POUNDS ACCORDING TO ASTM D4632. IF USED, THE GEOTEXTILE MAY COVER THE ENTIRE BACK FACE OF THE BLOCKS OR MAY BE CUT IN STRIPS TO COVER THE GAPS BETWEEN TAIL UNITS WITH A MINIMUM OF 6 INCHES OF OVERLAP OVER THE CONCRETE TAIL ON BOTH SIDES.

PART 3: EXECUTION
3.01 EXCAVATION
- A. EXCAVATE AS REQUIRED FOR INSTALLATION OF THE RETAINING WALL SYSTEM. EXCAVATE TO THE BASE LEVEL FOR A SUFFICIENT DISTANCE BEHIND THE FACE TO PERMIT INSTALLATION OF THE BASE AND GEOGRID REINFORCEMENT (IF ANY).
- B. SLOPE OR SHORE EXCAVATION AS NECESSARY FOR SAFETY AND FOR CONFORMANCE WITH APPLICABLE OSHA REQUIREMENTS.

3.02 WALL BASE
- A. FOUNDATION SOILS SHALL BE EXCAVATED TO THE DIMENSIONS SHOWN ON THE PLANS. FOUNDATION SOIL SHALL BE OBSERVED BY THE GEOTECHNICAL ENGINEER TO CONFIRM THAT THE BEARING SOILS ARE SIMILAR TO THE DESIGN CONDITIONS OR ASSUMPTIONS.

3.03 UNIT INSTALLATION
- A. PLACE THE FIRST COURSE OF UNITS DIRECTLY ON THE WALL BASE. CHECK UNITS FOR LEVEL AND ALIGNMENT. ADJACENT UNITS SHOULD BE IN CONTACT. IF POSSIBLE, BEGIN PLACING UNITS AT THE LOWEST SECTION OF THE WALL.
- B. FILL ALL VOIDS BETWEEN AND WITHIN THE BLOCKS WITH GRANULAR UNIT FILL. ADDITIONAL UNIT FILL IS NOT REQUIRED BEHIND THE UNITS, BUT MAY BE PLACED FOR THE CONVENIENCE OF THE CONTRACTOR.
- C. PLACE BACKFILL BEHIND THE UNITS IN MAXIMUM LOOSE LIFTS OF 8 INCHES AND COMPACT. IF SELECT GRANULAR FILL IS REQUIRED, IT SHOULD EXTEND THE FULL LENGTH OF THE GEOGRID REINFORCEMENT. COMPACT ALL BACKFILL TO A MINIMUM OF 95 PERCENT OF THE MAXIMUM DRY DENSITY (ASTM D698, STANDARD PROCTOR). FOR COHESIVE SOILS, THE MOISTURE CONTENT AT THE TIME OF COMPACTION SHOULD BE ADJUSTED TO WITHIN -3 AND +4 PERCENT OF OPTIMUM. PLACE BACKFILL IN SUCCESSIVE LIFTS UNTIL LEVEL WITH THE TOP OF THE FACING UNIT.
- D. REMOVE ALL EXCESS AGGREGATE AND OTHER MATERIALS FROM THE TOP OF THE UNITS BEFORE LAYING UP THE NEXT COURSE.
- E. FOR GEOGRID REINFORCED WALLS, PLACE THE CORRECT GEOGRID AT THE LOCATIONS AND ELEVATIONS SHOWN ON THE PLANS OR THE SHOP DRAWINGS. GEOGRID REINFORCEMENT SHALL BE PLACED HORIZONTALLY ON COMPACTED BACKFILL. THE LENGTH OF THE GEOGRID IS MEASURED FROM THE FRONT FACE OF THE WALL. EXTEND THE GRID ONTO THE FRONT FACE FLANGE OF THE FACING UNIT. ORIENT THE GEOGRID WITH THE STRONG AXIS (MACHINE DIRECTION) PLACED PERPENDICULAR TO THE WALL FACE. GEOGRID SHALL NOT BE SPLICED BY ANY MEANS IN THE ROLL DIRECTION.
- F. GEOGRIDS SHALL BE PLACED SIDE BY SIDE TO PROVIDE COMPLETE COVERAGE ALONG THE WALL FACE. NO OVERLAP IS REQUIRED BETWEEN ADJACENT GRIDS ON STRAIGHT SECTIONS OF THE WALL. ON CONVEX CURVES, PLACE A MINIMUM OF 3 INCHES OF BACKFILL MATERIAL BETWEEN OVERLAPPING GEOGRID LAYERS.
- G. PLACE THE NEXT COURSE OF SEGMENTAL UNITS IN RUNNING BOND WITH THE PREVIOUS COURSE. PLACE THE WEB NOTCH OVER THE ALIGNMENT HOOP PROTRUDING FROM THE UNIT BELOW, AND PULL THE UNIT FORWARD TO CONTACT THE HOOP.
- H. FOR GEOGRID REINFORCED WALLS, PULL GEOGRIDS TAUGHT AND STAKE THE LOOSE END BEFORE PLACING THE NEXT COURSE OF BACKFILL. BACKFILL SHALL BE PLACED, SPREAD, AND COMPACTED IN SUCH A MANNER THAT MINIMIZES THE DEVELOPMENT OF WRINKLES IN THE GEOGRID AND/OR MOVEMENT OF THE GEOGRID. DO NOT OPERATE EQUIPMENT DIRECTLY ON THE GEOGRID. A MINIMUM BACKFILL DEPTH OF 6 INCHES SHOULD BE PLACED BEFORE OPERATING EQUIPMENT OVER THE GRIDS.
- I. CONTINUE PLACING SUCCESSIVE COURSES TO THE ELEVATIONS SHOWN ON THE PLANS. CONSTRUCT WALL IN LEVEL STAGES, PLACING THE UNITS AT EACH COURSE FOR THE ENTIRE LENGTH OF THE WALL. IF POSSIBLE, UNIT FILL AND BACKFILL SHOULD BE PLACED TO THE LEVEL OF THE TOP OF THE FACING UNIT BEFORE PLACING THE NEXT COURSE.
- J. PROVIDE TEMPORARY SWALES TO DIVERT RUNOFF AWAY FROM WALL EXCAVATION AND AWAY FROM FACE.
- K. FINAL GRADE ABOVE AND BELOW THE RETAINING WALL SHALL PROVIDE FOR POSITIVE DRAINAGE AND PREVENT PONDING. PROTECT COMPLETED WALL FROM OTHER CONSTRUCTION. DO NOT OPERATE LARGE EQUIPMENT OR STORE MATERIALS ABOVE THE WALL THAT EXCEED THE DESIGN SURCHARGE LOADS.

Garden State PRECAST INC

PLEASE NOTE DRAWING IS STAMPED BY PE AND SLIGHT MODIFICATIONS MAY OCCUR IN PE REVIEW

DESCRIPTION	DWG. NO.	APP. DATE
NEW SURVEY DATA	R5	01/16/23
NEW SURVEY DATA	R4	12/15/21
COMPILED DRAWINGS	R3	11/15/21
CONFIRMED LAYOUT	R2	11/12/21
EXTENDED WALL	R1	11/5/21

SUPPLEMENTAL DRAWINGS

NOTES

STONE STRONG SYSTEM - GRAVITY RETAINING WALL
HOME & LAND DEVELOPMENT
NORTH PEAK STREET
#21-54385

GARDEN STATE PRECAST
P.O. BOX 702
FARMINGDALE, NJ 07727
732-938-4436
732-938-7096 - FAX

SHEET 8 OF 8

Borough of Highlands
42 Shore Drive, Highlands, NJ 07732
Phone: (732) 872-1224
www.highlandsborough.org

Tree Permit Application

APPLICANT Name: Home & Land Develop Corp Date: 9/21/21
Phone# 917 658 4111 Email: GWF718@AOL.com
Address: 32 NORTH PEAK Block 35 Lot 8

TREE INFORMATION

Tree #1 Type	SOFT MAPLE	Diameter	6"	Height	25'
Tree #2 Type	HICKORY	Diameter	12"	Height	50'
Tree #3 Type	HICKORY	Diameter	8"	Height	40'
Tree #4 Type	HICKORY	Diameter	12'	Height	50'
Tree #5 Type	"DEAD WARNER	Diameter	15'	Height	60'
Tree #6 Type	MAPLE "DEAD" HOLLOW	Diameter	16'	Height	60'
Tree #7 Type	"BROKEN UP HICKORY"	Diameter	16"	Height	60'
Tree #8 Type	DEAD CHERRY	Diameter	6"	Height	30'
Tree #9 Type	HICKORY 4"	Diameter	4"	Height	35'
Tree #10 Type	HICKORY 4"	Diameter	4"	Height	30'

Reason for removal: PREPARE FOR NEW HOME & BUILD ENVIRONMENTAL WALL TO STOP EROSION

INSTRUCTIONS

Are you the owner of the property? YES X NO ____
If no, we need a letter signed from your landlord with permission to do so.

If more than ten (10) trees are to be removed, you must see the Building Department secretary.

Must be accompanied by a survey or tax map showing tree location(s) to be removed.

Tree must be marked by having a red ribbon tied around it –supplied by Borough upon application. ✓

Application Fee $25.00 per tree **–NON-REFUNDABLE**

Amount paid $ _____ Check # _____ Cash _____

BOROUGH HALL USE ONLY

Applicant is hereby: Approved X Denied ____ Date September 27, 2021
Applicant is hereby required to replace removed tree(s) as follows:
Type of tree to be planted landscape project on completion
Location of replacement tree(s) project site
Applicant is not required to replace tree(s) buy must pay $ X in lieu of replacing the tree(s).

Work to be done by a licensed tree service and all debris to be removed.

Christian Lee
Official Signature

Borough of Highlands
42 Shore Drive, Highlands, NJ 07732
Phone: (732) 872-1224
www.highlandsborough.org

Tree Permit Application

APPLICANT Name: Home & Land Dulup Corp Date: 9/22/21
Phone# 917 686 4111 Email: GNF718@AOL.COM
Address: 14 North Peak Block 35 Lot 9

TREE INFORMATION

Tree #1 Type	White Oak	Diameter	24"	Height	35'
Tree #2 Type	Black Cherry Dead	Diameter	10"	Height	12'
Tree #3 Type	North Maple	Diameter	14"	Height	50'
Tree #4 Type	White Oak Leaning	Diameter	24"	Height	35'
Tree #5 Type	Sweet Cherry	Diameter	8"	Height	30'
Tree #6 Type	Black Oak	Diameter	8"	Height	50'
Tree #7 Type	Hickory	Diameter	14"	Height	55'
Tree #8 Type	Norway Maple	Diameter	6"	Height	35'
Tree #9 Type	Tulip Tree	Diameter	14"	Height	70'
Tree #10 Type	Compromised Tulip Tree	Diameter	20"	Height	50'

Reason for removal: New Home & Building New Engineered Wall to Fix Erosion.

INSTRUCTIONS

Are you the owner of the property? YES X NO ____
If no, we need a letter signed from your landlord with permission to do so.

If more than ten (10) trees are to be removed, you must see the Building Department secretary.

Must be accompanied by a survey or tax map showing tree location(s) to be removed.

Tree must be marked by having a red ribbon tied around it –supplied by Borough upon application.

Application Fee $25.00 per tree –**NON-REFUNDABLE**

Amount paid $ ____ Check # ____ Cash ____

BOROUGH HALL USE ONLY

Applicant is hereby: Approved X Denied ____ Date September 27, 2021
Applicant is hereby required to replace removed tree(s) as follows:
Type of tree to be planted landscape project upon completion
Location of replacement tree(s) project site
Applicant is not required to replace tree(s) buy must pay $ X in lieu of replacing the tree(s).

Christian Lee
Official Signature

Work to be done by a licensed tree service and all debris to be removed.

S/O 2021-04

42 SHORE DRIVE
HIGHLANDS, NJ 07732
P:732-872-1224 X 250
F: 732-872-0670

Borough of Highlands
APPLICATION FOR STREET EXCAVATION PERMIT
Permit Fee $190 / Deposit $500
MUST BE 2 SEPARATE CHECKS

gnf718@aol.com

SECTION A: TO BE COMPLETED BY APPLICANT

Applicant's Name Horse & land Dev Corp Telephone # 917 686 414

Address: 88-1 Portal RD

Contractor: Horse & land Dev Corp
If other than applicant

Address: 88-1 Portal RD Highlands NJ 07732

Location of excavation:
Valley Avenue

Show location on sketch below – road names, distances, etc. If space is not sufficient, attach detailed drawing

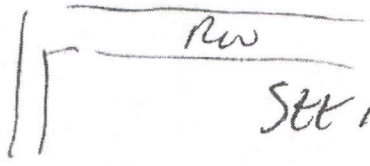

SEE ATTACHED MAP

Nature, purpose, and extent of excavation work:
32 NORTH PEAL ST
BLK 35 LOT 8

For trenches only: Length: _____ FT Width: _____ FT Depth: _____ FT
Are street Closures or traffic rerouting required? ( ) Yes ( ) No
(if yes, attach sketch and description of proposed traffic control devices)

Proposed date of commencement: _____ Proposed completion: _____

Statement: The undersigned applicant for a street excavation permit hereby warrants that the information herein is correct and that he is familiar with, and agrees to abide by the requirement of the "Street Excavation Ordinance" if the Borough of Highlands.

Insurance Company: _____ Policy Number: _____

SEE ATTACHED

Insurance Cert: _____ Expiration Date: _____

NOTE: APPLICANT SHALL NOTIFY THE PUBLIC WORKS DEPARTMENT AT 732-872-1224 EXT 250 PRIOR TO COMMENCEMENT OF WORK.

42 SHORE DRIVE
HIGHLANDS, NJ 07732
P:732-872-1224 X 250
F: 732-872-0670

Borough of Highlands
APPLICATION FOR STREET EXCAVATION PERMIT

SECTION B: TO BE COMPLETED BY PUBLIC WORKS SUPERINTENDENT*

*Or Borough Engineer if applicable

Estimated excavation size: _____
Deposit amount required: $ 500 Permit Fee $ 190

Surety Bond Recommendation:
Required? ☐ Yes ☐ No

Provisions (if any):

Approval: (✓) Yes ( ) No

Disapproval Reason:

Public Works Superintendent Signature — Date: 10/7/21

SECTION C: TO BE COMPLETED BY POLICE CHIEF*

WHEN STREET CLOSURES OR TRAFFIC REROUTING IS PROPOSED

Approved: (X) Yes ( ) No

Conditions of Approval (if any): ADVANCED NOTICE, TRAFFIC CONTROL
NOTICE TO NEIGHBORHOOD

Reason for disapproval:

Police Chief Signature — Date: 10-7-21

42 SHORE DRIVE
HIGHLANDS, NJ 07732
P:732-872-1224 X 250
F: 732-872-0670

Borough of Highlands

APPLICATION FOR STREET EXCAVATION PERMIT

Section D: TO BE COMPLETED BY CASHIER

Permit Fee:
Amount Paid: 190 Date received: 10/1/2021

Surety Bond:
Amount Paid: _____ Date received: _____

Deposit:
Amount Paid: 500 Date received: 10/1/2021

Cashier Signature 10/1/2021 Date

Section E: TO BE COMPLETED BY BOROUGH CLERK *IF APPLICABLE*

Surety Bond # _____ Date Received: _____

Clerk Signature Date

Section F: TO BE COMPLETED BY THE BOROUGH ADMINISTRATOR

Signature 10.8.2021 Date

Section G: TO BE COMPLETED UPON COMPLETION OF WORK*

To be completed by the DPW Superintendent

Date work finished: _____
Date of inspection: _____
Approval: ( ) Yes ( ) No

Authorized to release deposit ( ) Yes ( ) No
Authorized to release bond ( ) Yes ( ) No

Signature Date

Section H: TO BE COMPLETED BY BOROUGH CLERK UPON COMPLETION

Bond released: ☐ Yes ☐ No

Signature Date

Sewer connection
$5,142

Street excavation
$190 fee
$500 deposit

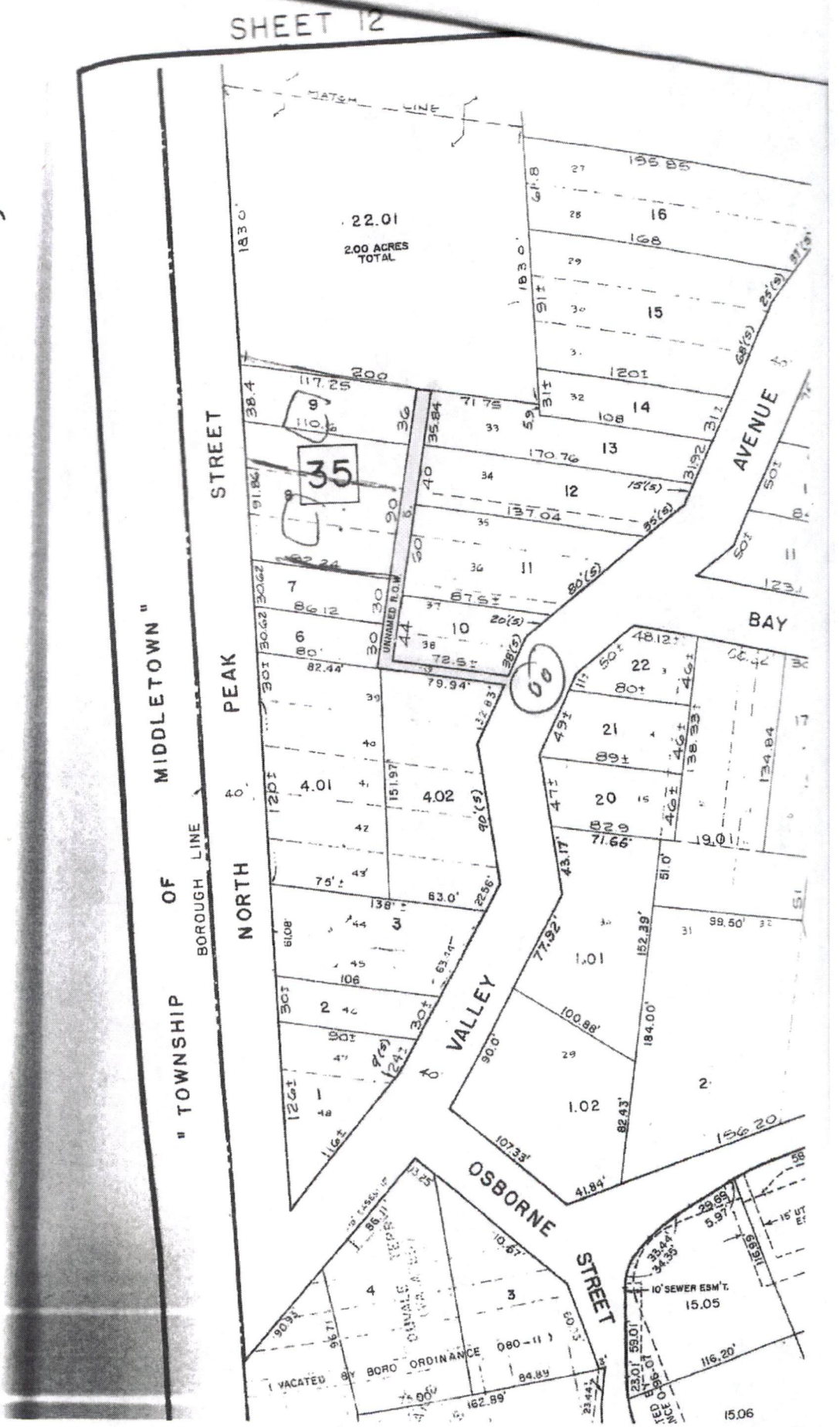

ACORD

CERTIFICATE OF LIABILITY INSURANCE

THIS CERTIFICATE IS ISSUED AS A MATTER OF INFORMATION ONLY AND CONFERS NO RIGHTS UPON THE CERTIFICATE HOLDER. THIS CERTIFICATE DOES NOT AFFIRMATIVELY OR NEGATIVELY AMEND, EXTEND OR ALTER THE COVERAGE AFFORDED BY THE POLICIES BELOW. THIS CERTIFICATE OF INSURANCE DOES NOT CONSTITUTE A CONTRACT BETWEEN THE ISSUING INSURER(S), AUTHORIZED REPRESENTATIVE OR PRODUCER, AND THE CERTIFICATE HOLDER.

IMPORTANT: If the certificate holder is an ADDITIONAL INSURED, the policy(ies) must be endorsed. If SUBROGATION IS WAIVED, subject to the terms and conditions of the policy, certain policies may require an endorsement. A statement on this certificate does not confer rights to the certificate holder in lieu of such endorsement(s).

PRODUCER	CONTACT NAME: Anthony DiMeglio (Partner)
Holmes & McDowell	PHONE (A/C, No, Ext): (732)946-4800 FAX (A/C, No): (732)946-4940
PO Box 348	E-MAIL ADDRESS: A.Dimeglio@holmesmcdowell.com
Holmdel NJ 07733	INSURER(S) AFFORDING COVERAGE / NAIC #
INSURED	INSURER A: Kinsale Insurance Company
Home & Land Development Corp.	INSURER B: AmGUARD Insurance Company
16a Bellevue Ave	INSURER C:
Rumson NJ 07760	INSURER D:
	INSURER E:
	INSURER F:

COVERAGES **CERTIFICATE NUMBER:** 2021-2022 **REVISION NUMBER:**

THIS IS TO CERTIFY THAT THE POLICIES OF INSURANCE LISTED BELOW HAVE BEEN ISSUED TO THE INSURED NAMED ABOVE FOR THE POLICY PERIOD INDICATED. NOTWITHSTANDING ANY REQUIREMENT, TERM OR CONDITION OF ANY CONTRACT OR OTHER DOCUMENT WITH RESPECT TO WHICH THIS CERTIFICATE MAY BE ISSUED OR MAY PERTAIN, THE INSURANCE AFFORDED BY THE POLICIES DESCRIBED HEREIN IS SUBJECT TO ALL THE TERMS, EXCLUSIONS AND CONDITIONS OF SUCH POLICIES. LIMITS SHOWN MAY HAVE BEEN REDUCED BY PAID CLAIMS.

INSR LTR	TYPE OF INSURANCE	ADDL INSD	SUBR WVD	POLICY NUMBER	POLICY EFF (MM/DD/YYYY)	POLICY EXP (MM/DD/YYYY)	LIMITS	
A	X COMMERCIAL GENERAL LIABILITY			0100041455-5	8/09/2021	8/09/2022	EACH OCCURRENCE	$ 1,000,000
	CLAIMS-MADE [X] OCCUR						DAMAGE TO RENTED PREMISES (Ea occurrence)	$ 100,000
							MED EXP (Any one person)	$ N/A
							PERSONAL & ADV INJURY	$ 1,000,000
	GEN'L AGGREGATE LIMIT APPLIES PER:						GENERAL AGGREGATE	$ 2,000,000
	[X] POLICY [ ] PRO-JECT [ ] LOC						PRODUCTS - COMP/OP AGG	$ 2,000,000
	OTHER:							$
	AUTOMOBILE LIABILITY						COMBINED SINGLE LIMIT (Ea accident)	$
	ANY AUTO						BODILY INJURY (Per person)	$
	ALL OWNED AUTOS / SCHEDULED AUTOS						BODILY INJURY (Per accident)	$
	HIRED AUTOS / NON-OWNED AUTOS						PROPERTY DAMAGE (Per accident)	$
								$
	UMBRELLA LIAB OCCUR						EACH OCCURRENCE	$
	EXCESS LIAB CLAIMS-MADE						AGGREGATE	$
	DED RETENTION $							$
A	WORKERS COMPENSATION AND EMPLOYERS' LIABILITY Y/N	N/A		R2WC242420	1/11/2021	1/11/2022	X PER STATUTE OTH-ER	
	ANY PROPRIETOR/PARTNER/EXECUTIVE OFFICER/MEMBER EXCLUDED? [N] (Mandatory in NH)						E.L. EACH ACCIDENT	$ 1,000,000
	If yes, describe under DESCRIPTION OF OPERATIONS below						E.L. DISEASE - EA EMPLOYEE	$ 1,000,000
							E.L. DISEASE - POLICY LIMIT	$ 1,000,000

DESCRIPTION OF OPERATIONS / LOCATIONS / VEHICLES (ACORD 101, Additional Remarks Schedule, may be attached if more space is required)

CERTIFICATE HOLDER

Borough of Highlands
14 & 32 N. Peak Street
Highlands, NJ 07732

CANCELLATION

SHOULD ANY OF THE ABOVE DESCRIBED POLICIES BE CANCELLED BEFORE THE EXPIRATION DATE THEREOF, NOTICE WILL BE DELIVERED IN ACCORDANCE WITH THE POLICY PROVISIONS.

AUTHORIZED REPRESENTATIVE

Anthony DiMeglio (Partner)

© 1988-2014 ACORD CORPORATION. All rights reserved.

New Jersey Natural Resources Conservation Program

FREEHOLD SOIL CONSERVATION DISTRICT
(Serving Middlesex and Monmouth Counties)

4000 Kozloski Road, P.O. Box 5033
Freehold, New Jersey 07728-5033
Tel: (732) 683-8500
Fax: (732) 683-9140
E-mail: info@freeholdscd.org
Website: www.freeholdsoil.org

10/12/2021

HOME & LAND DEVELOPMENT CORP
88-1 PORTLAND ROAD
HIGHLANDS NJ 07732

Ref.#: 0012-C726
Proj.: 32 NORTH PEAR STREET
Twp. : HIGHLANDS
Block: 35
Lots : 8

PROJECT EXEMPT
DEMOLITION ONLY, LESS THAN 5,000 SQUARE FEET OF DISTURBANCE PROPOSED

Dear HOME & LAND DEVELOPMENT CORP,

This is to inform you that in accordance with the New Jersey Soil Erosion and Sediment Control Act; N.J.S.A. 4:24-39 et. seq., Chapter 251, P.L. 1975 and as amended by C. 264, P.L. 77 and C. 459, P.L. 79, anyone disturbing more than 5,000 square feet of surface area of land for demolition of existing structures must file an application along with soil erosion and sediment control plans with the local District office for review and certification.

In reference to the above project, the area of land to be disturbed for demolition only is less than 5,000 square feet; therefore, does not require certification of a Soil Erosion and Sediment Control plan.

However, should new construction be proposed which will exceed 5,000 square feet, submission and certification of Soil Erosion and Sediment Control plans would be required.

If you should have any questions, please feel free to contact our office.

Sincerely,

Ben Shotland
Resource Conservationist II

cc: Planning Board
Construction Official
Municipal Engineer
Applicant's Engineer

YOUR GOALS. OUR MISSION.

HGPB- R1990

August 15, 2023

Nancy Tran, Land Use Board Secretary
Borough of Highlands Land Use Board
42 Shore Drive
Highlands, New Jersey 07732

Via Email (ntran@highlandsborough.org)

Re: Home & Land Development Corp
14 North Peak and 32 North Peak
Block 35, Lots 8 & 9
Single Family Residential (R-101) Zone
Minor Subdivision, Variance
Second Completeness Review

Dear Ms. Tran:

As requested, we have reviewed the above referenced application in accordance with the Borough of Highlands Zoning and Land Use Regulations section entitled Part 3, Subdivision and Site Plan Review, Article VI, Application Procedure, and Article VIII, Plat and Plan Details, section 21-58.A – Minor Subdivision Plat.

The applicant submitted the following documents in support of this application:

1. Land Use Board Application for Subdivision and Variance dated November 18, 2022.
2. Minor Subdivision Plan prepared by Thomas P. Santry, Jr., P.L.S., dated July 29, 2022, **last revised May 1, 2023,** consisting of three (3) sheets.
3. **Stone Strong System – Gravity Retaining Wall, prepared by Garden State Precast, last revised December 15, 2021, consisting of eight (8) sheets.**

The following information was reviewed for completeness purposes pursuant to Ordinance Section 21-58.A:

Minor Subdivision Plat: The plat shall be prepared to scale, based on a current survey or some other similarly accurate base, at a scale of not less than one (1) inch equals one hundred (100) feet, to enable the entire tract to be shown on one (1) sheet. The plat shall be signed and sealed by a licensed New Jersey Land Surveyor and shall show or include the following information:

1. A key map at a scale of not less than 1" = 400' showing the location of that portion which is to be subdivided in relation to the entire tract and the surrounding area. **Provided**.
2. All existing structures, wooded areas and topographical features, such as slump blocks, within the portion to be subdivided and within seventy-five (75) feet thereof. **Partially provided. Existing wooded areas shall be indicated on the plan.**
3. The name of the owner and all adjoining property owners and owners of property directly across the street as disclosed by the most recent municipal tax record. If there is no positive evidence of ownership of any parcel of adjoining property within two hundred (200) feet, a certificate will be presented from the custodian of tax records to that effect. **Provided.**
4. The Tax Map sheet, block and lot numbers. **Provided.**
5. All streets or roads and streams within seventy-five (75) feet of the subdivision. **Provided.**

T&M ASSOCIATES, 11 Tindall Road, Middletown, NJ 07748 P 732.671.6400 F 732.671.7365 W tandmassociates.com

Le: **Nancy Tran, Land Use Board Secretary**
Borough of Highlands Land Use Board

Re: **Home & Land Development Corp**
14 North Peak and 32 North Peak
Block 35, Lots 8 & 9
Single Family Residential (R-101) Zone
Minor Subdivision, Variance
Second Completeness Review

6. Location of existing streets, and existing and proposed property lines, lot sizes, and areas. **Provided.**
7. Metes and bounds descriptions of all new lot and property lines. **Provided.**
8. Existence and location of any utility or other easement. **Not provided. Dwellings which have recently been demolished existed on site. The applicant shall confirm the existence and location of any utilities or other easements.**
9. Setback, sideline and rear yard distances and existing structures. **Provided.**
10. The name and address of the person preparing the plat, the graphic scale, date of preparation and reference meridian. **Provided.**
11. Certification from the Tax Collector that all taxes and assessments for local improvements on the property have been paid up to date. **Not provided. The Applicant's transmittal letter has indicated this item was provided, however was not included as part of the submission to this office. We have no objection to the Board deeming this item complete, provided the Borough confirms receipt of the certification.**
12. Certification statement for the required municipal signatures, stating: **Provided.**
    - Application No. _____ approved/disapproved by the Highlands Borough Planning Board/Board of Adjustment as a Minor Subdivision on _____.
      (date)

      _____
      Chairman

      _____
      Secretary
13. Certification statement for the County Planning Board approval / disapproval, if required. **Not applicable.**
14. Zone district boundary lines, if any, on or adjoining the property to be subdivided and a schedule indicating the required minimum lot area, lot width, lot depth and front, rear and side yards of each zone district located on the property. **Provided.**
15. A wetlands statement provided by a qualified expert. **Not provided. We have no objection to the Board deeming this item complete pending confirmation from applicant prior to hearing.**
16. The Board reserves the right to require a feasible sketch plan layout of remaining land not being subdivided if it is deemed necessary. **The applicant has provided a generic house layout that demonstrates the sizes of proposed homes and the need for any additional setback relief.**
17. A lot grading plan, to be reviewed by the Borough Engineer, if required. **Provided.**

Le: **Nancy Tran, Land Use Board Secretary**
Borough of Highlands Land Use Board

Re: **Home & Land Development Corp**
14 North Peak and 32 North Peak
Block 35, Lots 8 & 9
Single Family Residential (R-101) Zone
Minor Subdivision, Variance
Second Completeness Review

Several items noted above have not been submitted to the Board, and adequate information has not been provided in order to perform a technical review of the application. Therefore, this application is hereby deemed **INCOMPLETE** pending the submission of information to adequately address the above-referenced items noted as "partially provided" or "not provided", along with the following:

a. The plans show adjustments to the existing gutter and roadway within North Peak Street, including installation of a retaining wall and storm drainage improvements within the existing cartway area. It is unclear how the proposed lots will provide the required parking and access to the dwellings from the street. The layout as proposed may require variance relief and approval from the Governing Body.

b. It appears that the applicant has previously demolished structures on both lots and performed clearing and some grading. The limit of disturbance already performed should be shown on the plans.

c. The limit of grading/disturbance for the proposed improvements appears to comprise the entire property limits, including some off-tract elements.

d. The applicant also notes the installation of a retaining wall within the unnamed 10' right of way to the south of the tracts, with no limit of disturbance or grading shown. The applicant shall provide evidence regarding title to this right of way, and under what authority they propose to install said improvements.

e. It is my understanding that the prior dwelling on lot 9 utilized a septic system. The location and disposition of this should be shown on the plans.

f. It is presumed that the proposed dwellings will have to connect into the Borough's sanitary sewer system located in Valley Avenue. The applicant shall review and identify their proposed method of connection, which may involve use of the 10' right of way previously mentioned.

g. In addition to the above, the applicant shall identify means of utility connections for water and electric at a minimum, and identify their locations on the plans.

h. The applicant shall document compliance with the Steep Slope Ordinance found at 21-84.B and provide calculations as required therein. In addition, means and methods for controlling velocity and rate of stormwater runoff shall be documented.
Continuing Comment – The applicant is requesting variance relief from the Steep Slope Ordinance. The property contains slopes greater than 20%. Considering this factor and the extent of improvements proposed, I recommend the applicant demonstrate compliance with all requirements of 21-84B prior to being deemed complete.

The applicant shall provide a point-by-point response addressing the comments contained within this completeness letter.

Le: **Nancy Tran, Land Use Board Secretary**
Borough of Highlands Land Use Board

Re: **Home & Land Development Corp**
14 North Peak and 32 North Peak
Block 35, Lots 8 & 9
Single Family Residential (R-101) Zone
Minor Subdivision, Variance
Second Completeness Review

Should you have any questions or require any additional information, please call.

Very truly yours,

T&M ASSOCIATES

EDWARD W. HERRMAN, P.E., P.P., C.M.E., C.F.M.
LAND USE BOARD ENGINEER

EWH

cc: Michael Muscillo, Borough Administrator (mmuscillo@highlandsborough.org)
Ron Cucchiaro, Esq., Land Use Board Attorney (RCucchiaro@weiner.law)
Erin Uriarte, Zoning Officer (euriarte@middletownnj.org)
Home & Land Development Corp., Applicant (gnf718@aol.com)
Michael A. Bruno, Esq., Applicant's Attorney (mbruno@ghclaw.com)

G:\Projects\HGPB\R1990\Correspondence\Tran_EWH_Home and Land Development Corp_Second Completeness Review.docx

THOMAS P. SANTRY, P.A.
LAND SURVEYORS
ONE TWENTY EIGHT EAST RIVER ROAD
RUMSON, NJ 07760

PHONE: (732) 741-4800
FAX: (732) 741-0084

November 30, 2023

Re: Home & Land Development Corp
14 North Peak and 32 North Peak
Block 35, Lots 8 & 9
Single Family Residential (R-101) Zone
Minor Subdivision, Variance
Response Letter to Second Completeness Review

Dear Ms. Tran,

In response to the Second Completeness Review letter dated August 15, 2023, prepared by Edward Herman, Highlands Land Use Board Engineer, following revisions have been made to the plans for the above referenced application:

Minor Subdivision Plat:

Comment 2. All existing structures, wooded areas and topographical features, such as slump blocks, within the portion to be subdivided and within seventy-five (75) feet thereof. **Partially provided. Existing wooded areas shall be indicated on the plan.**

THE LIMITS OF THE WOODED AREA HAVE BEEN FIELD VERIFIED AND ARE NOW LABELED ON THE PLANS.

Comment 8. Existence and location of any utility or other easement. **Not provided. Dwellings which have recently been demolished existed on site. The applicant shall confirm the existence and location of any utilities or other easements.**

THE PLANS SHOW UTILITY POLES (FOR ELECTRIC) LOCATED ON THE NORTHERLY SIDE OF NORTH PEAK STREET. THE GAS AND WATER LINE ARE LOCATED ON NORTH PEAK STREET. AN ADDITIONAL WATER METER HAS BEEN LOCATED ON LOT 9 AND IS SHOWN ON THE PLAN.

Comment a. The plans show adjustments to the existing gutter and roadway within North Peak Street, including installation of a retaining wall and storm drainage improvements within the existing cartway area. It is unclear how the proposed lots will provide the required parking and access to the dwellings from the street. The layout as proposed may require variance relief and approval from the Governing Body.

EACH DWELLING WILL HAVE A ONE CAR GARAGE AND 10' WIDE DRIVEWAY PROVIDING REQUIRED PARKING AND ACCESS TO NORTH PEAK STREET. THE GARAGES HAVE BEEN LABELED AND THE DRIVES ARE INDICATED.

Comment b. It appears that the applicant has previously demolished structures on both lots and performed clearing and some grading. The limit of disturbance already performed should be shown on the plans.

THE LIMIT OF CLEARING / DISTUBANCE CAUSED BY THE DEMOLITION OF THE EXISTING STRUCTURES ON BOTH LOTS HAS BEEN INDICATED ON THE PLANS AS THE WOODS LINE.

Comment c. The limit of grading/disturbance for the proposed improvements appears to comprise the entire property limits, including some off-tract elements.

THE LIMIT OF CLEARING / DISTUBANCE FOR THE PROPOSED IMPROVEMENTS IS INDICATED ON THE PLANS.

Comment d. The applicant also notes the installation of a retaining wall within the unnamed 10' right of way to the south of the tracts, with no limit of disturbance or grading shown. The applicant shall provide evidence regarding title to this right of way, and under what authority they propose to install said improvements.

THE APPLICANT WILL ADDRESS THIS DURING TESTIMONY.

Comment e. It is my understanding that the prior dwelling on lot 9 utilized a septic system. The location and disposition of this should be shown on the plans.

THE APPROXIMATE LOCATING OF THE EXISTING SEPTIC TANK ON LOT 9 IS NOW SHOWN ON THE PLANS.

Comment f. It is presumed that the proposed dwellings will have to connect into the Borough's sanitary sewer system located in Valley Avenue. The applicant shall review and identify their proposed method of connection, which may involve use of the 10' right of way previously mentioned.

A PROPOSED 4" SEWER LATERAL CONNECTION WILL BE TO THE REAR OF THE DWELLINGS TO THE 10 FT R.O.W. A 6" SEWER LINE WILL BE CONSTRUCTED WITHIN THE R.O.W. AND BE CONNECTED TO AN EXSITING SEWER MANHOLE LOCATED ON VALLEY AVENUE.

Comment g. In addition to the above, the applicant shall identify means of utility connections for water and electric at a minimum, and identify their locations on the plans.

THE REMAINING UTILITY CONNECTIONS (WATER, GAS, AND ELEC) WILL BE FROM NORTH PEAK STREET AS INDICATED ON THE PLANS.

Comment h. The applicant shall document compliance with the Steep Slope Ordinance found at 21-84.B and provide calculations as required therein. In addition, means and methods for controlling velocity and rate of stormwater runoff shall be documented.
Continuing Comment – The applicant is requesting variance relief from the Steep Slope Ordinance. The property contains slopes greater than 20%. Considering this factor and the extent of improvements proposed, I recommend the applicant demonstrate compliance with all requirements of 21-84B prior to being deemed complete.
The applicant shall provide a point-by-point response addressing the comments

THE GRADING SHOWN ON THIS PLAN WAS OBTAINED FROM A PLAN PREPARED BY EASTERN CIVIL ENGINEERING. THE APPLICANT IS REQUESTING A WAIVER FROM COMPLIANCE TO THE STEEP SLOPE ORDINANCE SINCE THE PROPOSED GRADING ELIMATATES ALL SLOPES GREATER THAN 15%.

STORMTECH CHAMBERS WILL BE INSTALLED IN THE REAR YARDS OF EACH PROPERTY. THE CHAMBERS WILL TEMORARILY STORE ROOF RUNOFF DURING A STORM EVENT TO CONTROL THE STORMWATER RUNOFF. THE BOTTOM OF THE CHAMBERS ARE OPEN AND ARE INSTALLED ON CLEAN STONE WHICH ALLOWS THE STORED WATER TO PERCOLATE INTO THE GROUND. ROOF LEADERS WILL BE HARD PIPED DIRECTLY TO THE CHAMBERS. DETAILS, SIZE AND SPECIFICATIONS WILL BE PROVIDED BY THE APPLICANT.

Should you have any questions, please feel free to call.

Very truly yours,

Thomas P. Santry, Jr.

NOTE: A WRITTEN "WAIVER AND DIRECTION NOT TO SET CORNER MARKERS" HAS BEEN OBTAINED FROM THE ULTIMATE USER PURSUANT TO N.J.A.C. 13:40-5.1(a).

THE INFORMATION SHOWN HEREIN CORRECTLY REPRESENTS THE CONDITIONS FOUND AT, AND AS OF THE DATE OF THE FIELD SURVEY, EXCEPT SUCH IMPROVEMENTS OR EASEMENTS, IF ANY, BELOW THE SURFACE AND NOT VISIBLE

THIS SURVEY IS SUBJECT TO CHANGE ACCORDING TO THE FACTS THAT A CURRENT TITLE REPORT MAY DISCLOSE

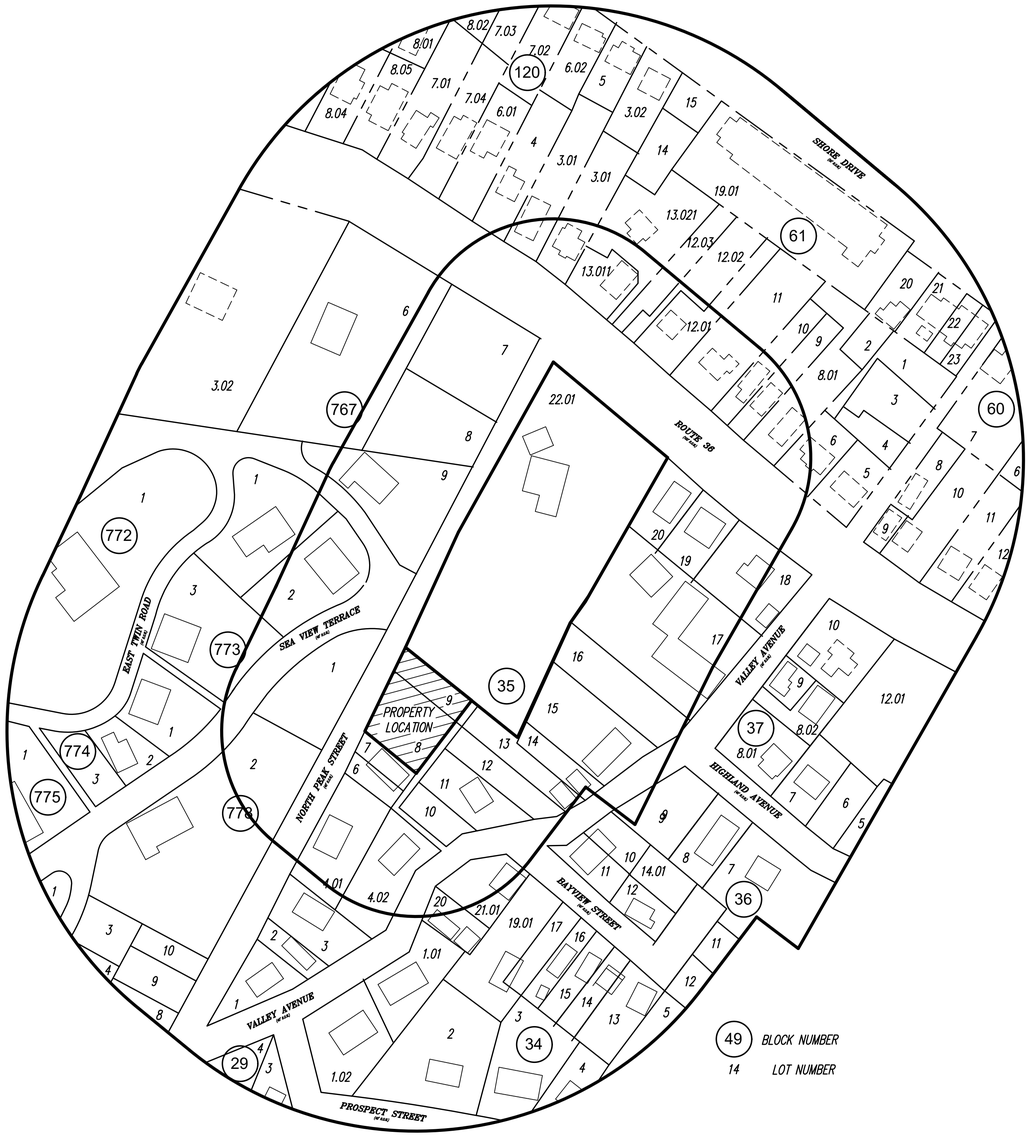

SCALE: 1"=100'

0 100 200 400 ft.

LIST OF OWNERS WITHIN 200 FEET				LIST OF OWNERS WITHIN 200 FEET (CONTINUED)			
BLOCK	LOT		PROPERTY OWNER	BLOCK	LOT		PROPERTY OWNER
758	1.01		MONMOUTH HILLS INC. ACCESS PROP MGMT 1090 KING GEORGES POST RD EDISON, NJ 08837	35	22.01		DIEBOLD RICHARD & MISCHELE 221 NAHESINK AVENUE HIGHLANDS, NJ 07732
778	1		MONMOUTH HILLS INC. ACCESS PROP MGMT 1090 KING GEORGES POST RD EDISON, NJ 08837	35	4.02		MALONE PATRICK FRANCIS & PAULA ANN 110 VALLEY AVENUE HIGHLANDS, NJ 07732
35	6		ALVATOR DONNA 10 NORTH PEAK STREET HIGHLANDS, NJ 07732	35	15		AKER EDWARD W & EVELYN 92 VALLEY AVENUE HIGHLANDS, NJ 07732
35	10		DORIN JOSEPH & JOSEPH DORIN LM 102 VALLEY AVENUE HIGHLANDS, NJ 07732	767	9		FARROW LEONILDA A & CECIL W PO BOX 646 NAHSONK, NJ 07752
35	12		DORIN JOSEPH & JOSEPH DORIN LM 102 VALLEY AVENUE HIGHLANDS, NJ 07732	778	2		ONEIL MICHAEL & KATHY 34 SEAVIEW TERR HIGHLANDS, NJ 07732
35	8		FELICIANO JERRY 202 N BROUGHTON SQUARE BOYNTON BEACH, FL 33436	774	1		MCALEVY COLLEEN FLINN 38 E TWIN RD HIGHLANDS, NJ 07732
35	14		NEWMAN SR. RONALD & NANCY 94 VALLEY AVENUE HIGHLANDS, NJ 07732	773	2		REINAUER CRAIG 32 SEAVIEW TERR HIGHLANDS NJ 07732
34	20		109 VBALLEY AVE LLC 13 JARED LANE LITTLE EGG HARBOR, NJ 08087	773	3		GLASS KEITH 37 E TWIN RD HIGHLANDS, NJ 07750
35	7		ALVATOR DONNA 10 NORTH PEAK STREET HIGHLANDS, NJ 07732	35	16		FENDICK KERRY & VALENCIA ENRIQUE 78 VALLEY AVE HIGHLANDS, NJ 07732
34	1.01		LEMEGA JERRY & NADIYA 111 VALLEY AVE HIGHLANDS, NJ 07732	35	17		VALLEY AVENUE MANAGEMENT LLC 82 VALLEY AVENUE HIGHLANDS, NJ 07732
34	21.01		WAGNER PETER 101 VALLEY AVENUE HIGHLANDS, NJ 07732	35	4.01		JOHNSON EDWARD W 2 NORTH PEAK STREET HIGHLANDS, NJ
35	11		DORIN JOSEPH & JOSEPH DORIN 102 VALLEY AVENUE HIGHLANDS, NJ 07732	773	1		PHAIR ARTHUR H & KUGELMANN 36 E TWIN ROAD HIGHLANDS, NJ 07732
35	9		HOME & LAND DEVELOPMENT CORP 88-1 PORTLAND ROAD HIGHLANDS, NJ 07732	767	6		
36	11		BRANIN GARY & PAMELA 97 VALLEY AVE HIGHLANDS, NJ 07732	61	10		
35	13		SERGHIS DEMETRIOUS 96 VALLEY AVENUE HIGHLANDS, NJ 07732	61	12.01		

UTILITY AND GOVERNMENTAL AGENCY TO BE NOTIFIED

JCP&L
300 MADISON AVENUE
PO BOX 1911
MORRISTOWN, NJ 07960

NEW JERSEY AMERICAN WATER COMPANY
ATTN: CONSTRUCTION DEPARTMENT
661 SHREWSBURY AVE
SHREWSBURY, NJ 07702

COMCAST COMMUNICATIONS OF MONMOUTH COUNTY
RON BERTRAND, CONSTRUCTION FOREMAN
403 SOUTH ST
EATONTOWN, NJ 07724

VERIZON COMMUNICATIONS
ONE VERIZON WAY
BASKING RIDGE, NJ 07920

TOWNSHIP OF MIDDLETOWN SEWERAGE AUTHORITY
RAYMOND J. NIERSTEDT, P.E., EXECUTIVE DIRECTOR
PO POX 205, 100 BEVERLY WAY
BELFORD , NJ 07718

NJ NATURAL GAS COMPANY
PO BOX 1464, 1415 WYCKOFF ROAD
WALL, NJ 07719

MONMOUTH COUNTY BAYSHORE OUTFALL AUTHORITY
ATTN: EXECUTIVE DIRECTOR
PO BOX 184, 200 HARBOR WAY
BELFORD, NJ 07718

Application No. _____ approved/disapproved by the Highlands Borough Planning Board/Board of Adjustment as a Minor Subdivision on _____.
(date)

_____
Chairman

_____
Secretary

NO WETLANDS EXIST ON THIS PROPERTY.

I HEREBY CERTIFY THAT THIS IS A TRUE AND ACCURATE SURVEY MADE ON THE GROUND. THERE ARE NO ENCROACHMENTS EITHER WAY ACROSS PROPERTY LINES EXCEPT AS SHOWN

IF THIS DOCUMENT DOES NOT CONTAIN A RAISED IMPRESSION SEAL OF THE PROFESSIONAL IT IS NOT AN ORIGINAL

Rev. 11/30/23 – PER ENGINEERING REVIEW COMMENTS
Rev. 5/1/23 Add Cert.

RESPONSIBLE PROFESSIONAL'S SIGNATURE DATE:
THOMAS P. SANTRY, JR., P.L.S.
PROFESSIONAL LAND SURVEYOR
P.L.S. LIC. No. 24GS3540000

MINOR SUBDIVISION OF LOTS 8 & 9 ~ BLOCK 35

32 & 14 North Peak Street
Borough of Highlands
Monmouth County, New Jersey

THOMAS P. SANTRY, P.A.
LAND SURVEYORS
ONE HUNDRED TWENTY EIGHT EAST RIVER ROAD
RUMSON, NEW JERSEY 07760
PHONE (732) 741-4800 FAX (732) 741-0084

PROJ. No. 22-074
SCALE 1" = 100'
DATE 7/29/22
DRAWN BY MGB
TAX MAP SHEET # 10
SHEET 1 OF 3
DRAWING No. HL254

COPYRIGHT – ALL RIGHTS RESERVED THE COPYING OR REUSE OF THIS DOCUMENT, OR PORTIONS THEREOF, FOR OTHER THAN THE ORIGINAL PROJECT OR THE PURPOSE ORIGINALLY INTENDED, WITHOUT THE WRITTEN PERMISSION OF THOMAS P. SANTRY, SURVEYING IS PROHIBITED

NOTE: A WRITTEN "WAIVER AND DIRECTION NOT TO SET CORNER MARKERS" HAS BEEN OBTAINED FROM THE ULTIMATE USER PURSUANT TO N.J.A.C. 13:40-5.1(d).

THE INFORMATION SHOWN HEREIN CORRECTLY REPRESENTS THE CONDITIONS FOUND AT, AND AS OF THE DATE OF THE FIELD SURVEY, EXCEPT SUCH IMPROVEMENTS OR EASEMENTS, IF ANY, BELOW THE SURFACE AND NOT VISIBLE

THIS SURVEY IS SUBJECT TO CHANGE ACCORDING TO THE FACTS THAT A CURRENT TITLE REPORT MAY DISCLOSE

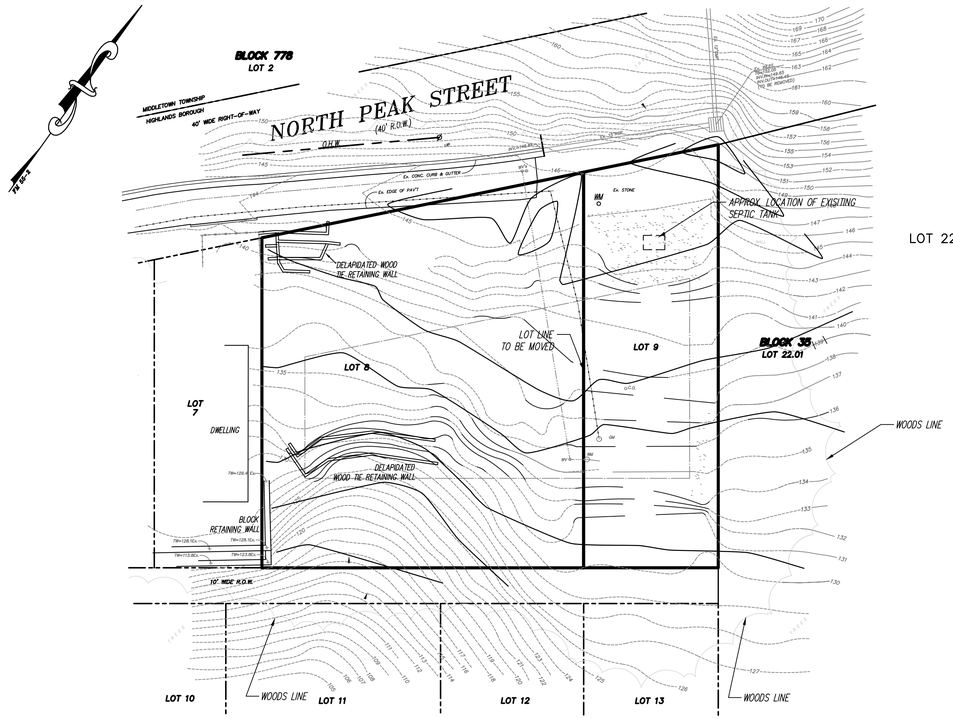

NO DETERMINATION HAS BEEN MADE AS TO THE PRESENCE OR ABSENCE OF WETLANDS ON THIS PROPERTY. NO STATEMENT IS BEING MADE OR IMPLIED HEREIN, NOR SHOULD IT BE CONSTRUED THAT ANY STATEMENT IS BEING MADE BY THE FACT THAT NO EVIDENCE OF THE SAME IS PORTRAYED HEREIN.

I HEREBY CERTIFY THAT THIS IS A TRUE AND ACCURATE SURVEY MADE ON THE GROUND. THERE ARE NO ENCROACHMENTS EITHER WAY ACROSS PROPERTY LINES EXCEPT AS SHOWN

IF THIS DOCUMENT DOES NOT CONTAIN A RAISED IMPRESSION SEAL OF THE PROFESSIONAL IT IS NOT AN ORIGINAL

Rev. 11/30/23 – PER ENGINEERING REVIEW COMMENTS
Rev. 5/1/23 Add Wall

RESPONSIBLE PROFESSIONAL'S SIGNATURE DATE:
THOMAS P. SANTRY, JR., P.L.S.
PROFESSIONAL LAND SURVEYOR
P.L.S. LIC. No. 24GS3540000

MINOR SUBDIVISION OF LOTS 8 & 9 ~ BLOCK 35

32 & 14 North Peak Street
Borough of Highlands
Monmouth County, New Jersey

PROJ. No.	22-074
SCALE	1" = 20'
DATE	7/29/22
DRAWN BY	MGB
TAX MAP SHEET #	10
SHEET	2 OF 3
DRAWING No.	HL254

THOMAS P. SANTRY, P.A.
LAND SURVEYORS
ONE HUNDRED TWENTY EIGHT EAST RIVER ROAD
RUMSON, NEW JERSEY 07760
PHONE (732) 741-4800 FAX (732) 741-0084

COPYRIGHT – ALL RIGHTS RESERVED THE COPYING OR REUSE OF THIS DOCUMENT, OR PORTIONS THEREOF, FOR OTHER THAN THE ORIGINAL PROJECT OR THE PURPOSE ORIGINALLY INTENDED, WITHOUT THE WRITTEN PERMISSION OF THOMAS P. SANTRY, SURVEYING IS PROHIBITED

NOTE: A WRITTEN "WAIVER AND DIRECTION NOT TO SET CORNER MARKERS" HAS BEEN OBTAINED FROM THE ULTIMATE USER PURSUANT TO N.J.A.C. 13:40-5.1(d).

THE INFORMATION SHOWN HEREIN CORRECTLY REPRESENTS THE CONDITIONS FOUND AT, AND AS OF THE DATE OF THE FIELD SURVEY, EXCEPT SUCH IMPROVEMENTS OR EASEMENTS, IF ANY, BELOW THE SURFACE AND NOT VISIBLE

THIS SURVEY IS SUBJECT TO CHANGE ACCORDING TO THE FACTS THAT A CURRENT TITLE REPORT MAY DISCLOSE

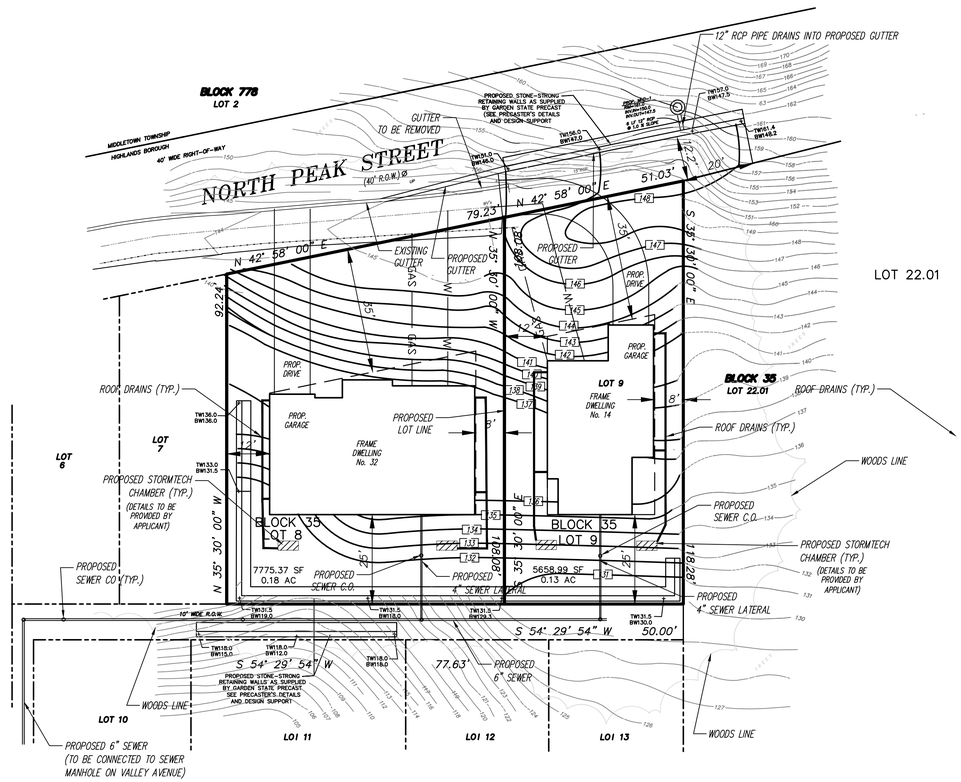

BOROUGH OF HIGHLANDS SCHEDULE OF LIMITATIONS ZONE "R-1.01"			
		PROPOSED	
PERMITTED USE		LOT 8	LOT 9
MINIMUM LOT AREA	5,000 SF	7,775.37 SF	5,658.99 SF
MINIMUM LOT DEPTH	100 FT	108.08'	118.28'
MINIMUM LOT FRONTAGE	50 FT	79.23'	51.03'
PRINCIPAL STRUCTURE			
MINIMUM FRONT SETBACK	35 FEET	35 FEET	35 FEET
MINIMUM REAR SETBACK	25 FEET	25 FEET	25 FEET
MINIMUM SIDE SETBACK	8/12 FEET	8/12 FEET	8/12 FEET
MAX LOT COVERAGE	70%	N/A	N/A
MAX BUILDING COVERAGE	30%	26.1%	22.6%
MAX BUILDING HEIGHT	30 FEET	N/A	N/A

SCALE: 1"=20'
0 20 40 80 ft.

NOTES:

1. TOPOGRAPHY AND GRADING OBTAINED FROM A CERTAIN MAP ENTITLED "GRADING PLAN FOR HOME & LAND. DEVELOPMENT CORP. BLOCK 35 LOT 9" SAID MAP WAS DRAWN BY EASTERN CIVIL ENGINEERING, LLC ON 2/10/22. PROJECT NO. 2101980
2. SILT FENCE SHALL BE PLACED AROUND THE PERIMETER OF THE LIMITS OF DISTURBANCE AND REMAIN UNTIL SOIL IS STABILIZED
3. APPLICANT TO REPAIR ANY DAMAGED CURB OR PAVEMENT AS PART OF CONSTRUCTION
4. ELEVATIONS SHOWN HEREON REFER TO NORTH AMERICAN VERTICAL DATUM OF 1988
5. VARIANCE REQUESTED STEEP SLOPES ANALYSIS

NO DETERMINATION HAS BEEN MADE AS TO THE PRESENCE OR ABSENCE OF WETLANDS ON THIS PROPERTY. NO STATEMENT IS BEING MADE OR IMPLIED HEREIN, NOR SHOULD IT BE CONSTRUED THAT ANY STATEMENT IS BEING MADE BY THE FACT THAT NO EVIDENCE OF THE SAME IS PORTRAYED HEREIN.

I HEREBY CERTIFY THAT THIS IS A TRUE AND ACCURATE SURVEY MADE ON THE GROUND. THERE ARE NO ENCROACHMENTS EITHER WAY ACROSS PROPERTY LINES EXCEPT AS SHOWN

IF THIS DOCUMENT DOES NOT CONTAIN A RAISED IMPRESSION SEAL OF THE PROFESSIONAL IT IS NOT AN ORIGINAL

RESPONSIBLE PROFESSIONAL'S SIGNATURE DATE:
THOMAS P. SANTRY, JR., P.L.S.
PROFESSIONAL LAND SURVEYOR
P.L.S. LIC. No. 24GS3540000

Rev. 11/30/23 – PER ENGINEERING REVIEW COMMENTS
Rev. 5/1/23

MINOR SUBDIVISION OF LOTS 8 & 9 ~ BLOCK 35

32 & 14 North Peak Street
Borough of Highlands
Monmouth County, New Jersey

THOMAS P. SANTRY, P.A.
LAND SURVEYORS
ONE HUNDRED TWENTY EIGHT EAST RIVER ROAD
RUMSON, NEW JERSEY 07760
PHONE (732) 741-4800 FAX (732) 741-0084

PROJ. No. 22-074
SCALE 1" = 20'
DATE 7/29/22
DRAWN BY MGB
TAX MAP SHEET # 10
SHEET 3 OF 3
DRAWING No. HL254

COPYRIGHT – ALL RIGHTS RESERVED THE COPYING OR REUSE OF THIS DOCUMENT, OR PORTIONS THEREOF, FOR OTHER THAN THE ORIGINAL PROJECT OR THE PURPOSE ORIGINALLY INTENDED, WITHOUT THE WRITTEN PERMISSION OF THOMAS P. SANTRY, SURVEYING IS PROHIBITED

Roberts
ENGINEERING GROUP LLC
Women Business Enterprise Certified

1670 Whitehorse-Hamilton Square Rd.
Hamilton, New Jersey 08690
609-586-1141 fax 609-586-1143
www.RobertsEngineeringGroup.com

February 20, 2024

Nancy Tran
Land Use Board Secretary
Borough of Highlands Land Use Board
151 Navesink Avenue
Highlands, New Jersey 07732

Re: Completeness Review No. 3
Home & Land Development Corp.
14 & 32 North Peak Street
Block 35, Lots 8 & 9
Borough of Highlands, Monmouth County, New Jersey
Our File No.: HLPB2022-10

Dear Ms. Tran:

As requested, we have reviewed the above referenced application in accordance with the Borough of Highlands Zoning and Land Use Regulations. section entitled, "Part 3, Subdivision and Site Plan Review, Article VI, Application Procedure", and "Article VIII, Plat and Plan Details, section 21-58.A – Minor Subdivision Plat".

Below is our Resolution Compliance Review and comments for the above referenced project. This review was prepared in accordance with the following documents received:

1. Response Letter to Second Completeness Review to Ms. Tran from Thomas P. Santry, P.A. dated November 30, 2023, unsigned.

2. Second Completeness Review to Ms. Tran from Edward W. Herrman, P.E., P.P., C.M.E., C.F.M., Land Use Engineer dated August 15, 2023.

3. Land Use Board Application for Subdivision and Variance dated November 18, 2022.

4. Minor Subdivision Plan prepared by Thomas P. Santry, Jr., P.L.S., dated July 29, 2022, last revised November 30, 2023, consisting of three (3) sheets.

5. Stone Strong System – Gravity Retaining Wall, prepared by Garden State Precast, last revised December 15, 2021, consisting of eight (8) sheets.

The Applicant has satisfied many of the comments as outlined within the Second Completeness Review dated, August 15, 2023, in pursuant to Ordinance Section 21-58.A Minor Subdivision Plat.

The application has been submitted as a Minor Subdivision and signed by a licensed land surveyor. There are multiple engineering issues such as grading, utilities, encroachments, stormwater management, steep slopes and retaining walls on the proposed lots and within an existing right-of-way. A Minor Site plan is required for these properties.

The Applicant must update the application as a Minor Subdivision and a Minor Site Plan and resubmit. The Applicant must provide a checklist for each and address all engineering issues affecting the property and adjoining properties.

All Checklist items and the comments noted below must be addressed in the resubmission.

A licensed surveyor is responsible for the Minor Subdivision. A licensed professional engineer is responsible for the Minor Site Plan which must address all engineering issues upon the resubmission of the application.

We offer the following comments and recommendations for the Planning Board's consideration:

I. ZONING

1. This property is located in the R-1.01 Residential District.

2. The Applicant requires no variances based on the current application.

3. The following bulk requirement summary is provided for the Board's reference.

R-1.01 Residential Zone	Required	Existing Lot 8	Existing Lot 9	Proposed Lot 8	Proposed Lot 9
Min. Lot Area (sf)	5,000	Not provided	Not provided	7,77.37	5658.99
Lot Frontage/Width (ft)	50	Not provided	Not provided	79.23	51.03
Min. Lot Depth (ft)	100	Not provided	Not provided	108.08	118.28
Min. Front Yard Setback (ft)	35	Not provided	Not provided	35	35
Min. Side Yard Setback (ft)	8/12	Not provided	Not provided	8/12	8/12
Min. Rear Yard Setback (ft)	25	Not provided	Not provided	25	25
Max. Building Height (ft)	30			Not provided -	Not provided -
Max Lot Coverage	70%			Not provided	Not provided
Max Building Coverage	30%			26.1%	22.6%
On-Site Parking (spaces)	TBD			0	0

II. CHECKLIST ITEMS

The Second Completeness comments are shown in italic font. The current comments are in bold text and are requested to be completed.

1. A key map at a scale of not less than 1" = 400' showing the location of that portion which is to be subdivided in relation to the entire tract and the surrounding area.

   Provided.

   A key map has been provided but it is unclear why adjoining Lot 22.01 is included within the scope of interest. Please provide an explanation and/or update the list for the 200 ft radius of property owners on the plan.

   Please indicate the Borough Municipal Line with the Township of Middletown. Please confirm 200 ft. property owners list within the Township of Middletown.

2. All existing structures, wooded areas, and topographical features, such as slump blocks, within the portion to be subdivided and within seventy-five (75) feet thereof.

   Partially provided. Existing wooded areas shall be indicated on the plan.

   The Applicant has indicated the limit of wooded areas have been field verified and labeled on the plan. Noted in Applicant's response letter.

   The existing dwellings and retaining walls within 75 feet of the subject properties are not shown on the plans. Please provide.

3. The name of the owner and all adjoining property owners and owners of property directly across the street as disclosed by the most recent municipal tax record. If there is no positive evidence of ownership of any parcel of adjoining property within two hundred (200) feet, a certificate will be presented from the custodian of tax records to that effect.

   Provided.

   Please refer to Comment No. 1

4. The Tax Map sheet, block and lot numbers.

   Provided.

5. All streets or roads and streams within seventy-five (75) feet of the subdivision.

   Provided.

6. Location of existing streets, and existing and proposed property lines, lot sizes, and areas.

   Provided.

   The Applicant is requested to provide on the plans. Sheet 2 is not complete for this submission.

7. Metes and bounds descriptions of all new lot and property lines.

   Provided.

8. The existence and location of any utility or other easement.

   Not provided. Dwellings which have recently been demolished existed on site. The applicant shall confirm the existence and location of any utilities or other easements.

   The 10 ft wide right-of-way adjacent to the southeasterly property line of both lots is not dimensioned or labeled on the Minor Subdivision.

   The Applicant has updated the plans to indicated utility poles (for electric) on the northerly side of North Peak Street, gas and water line on North Pead Street and an additional water meter on Lot 9.

   The existing water and gas lines extending into the lots including any meters and cleanouts must be shown on the Minor Subdivision and potential grading plan.

   Confirm that there are no utility easements on the existing lots. A portion of the existing pavement and utilities are not within the North Peak Street 40 ft. wide R.O.W.

9. Setback, sideline and rear yard distances and existing structures.

   Provided.

10. The name and address of the person preparing the plat, the graphic scale, date of preparation and reference meridian.

    Provided.

11. Certification from the Tax Collector that all taxes and assessments for local improvements on the property have been paid up to date.

Not provided. The Applicant's transmittal letter has indicated this item was provided, however was not included as part of the submission to this office. We have no objection to the Board deeming this item complete, provided the Borough confirms receipt of the certification.

Acceptable.

12. Certification statement for the required municipal signatures, stating:

    Provided.

    Provided on Sheet 1. Please add to the Minor Subdivision Plan.

    Application No. _____ approved/disapproved by the Highlands Borough Planning Board/Board of Adjustment as a Minor Subdivision on _____.
    (date)

    _____
    Chairman

    _____
    Secretary

13. Certification statement for the County Planning Board approval / disapproval, if required.

    Not applicable.

14. Zone district boundary lines, if any, on or adjoining the property to be subdivided and a schedule indicating the required minimum lot area, lot width, lot depth and front, rear and side yards of each zone district located on the property.

    Provided.

    Incomplete. The latest submission does not provide existing bulk requirements and proposed lot coverage. Refer to plan sheet 3 of 3.

15. A wetlands statement provided by a qualified expert.

    Not provided. We have no objection to the Board deeming this item complete pending confirmation from applicant prior to hearing.

    Provide a statement by a licensed engineer or other authority indicating that wetlands are or are not present on the property.

16. The Board reserves the right to require a feasible sketch plan layout of remaining land not being subdivided if it is deemed necessary.

    The applicant has provided a generic house layout that demonstrates the sizes of proposed homes and the need for any additional setback relief.

    Not acceptable. The proposed lots have many engineering issues that must be addressed by a licensed civil engineer. A licensed engineer is required to certify that the developed sites are designed and will be constructed under the appropriate standard of engineering practices and the safety of the homeowner and adjoining properties.

17. A lot grading plan, to be reviewed by the Borough Engineer, if required.

    Provided.

    As a condition of approval, it is recommended that the Applicant provide plot plans for review and approval at the time of obtaining building permits and as stated in Comment 16.

III. COMPLETENNESS

The application is deemed incomplete for board review. As discussed in the beginning narrative and the following Conclusion section, a Minor Site Plan is required for this application.

More information is also needed to perform a proper technical review of the minor subdivision application as discussed within the Checklist Items and the General Comments sections.

IV. GENERAL COMMENTS

Additional Second Completeness Review comments are shown in regular font. Current review comments are in bold text including the Applicant's responses when addressing a previous review comment.

a. The plans show adjustments to the existing gutter and roadway within North Peak Street, including installation of a retaining wall and storm drainage improvements within the existing cartway area. It is unclear how the proposed lots will provide the required parking and access to the dwellings from the street. The layout as proposed may require variance relief and approval from the Governing Body.

   Partially Provided by Applicant.

   The Applicant states, "Each dwelling will have one car garage and 10' wide driveway providing required parking and access to North Peak Steet."

   Off-street parking is determined by the number of bedrooms, which is unknown.

b. It appears that the applicant has previously demolished structures on both lots and performed clearing and some grading. The limit of disturbance already performed should be shown on the plans.

   Partially Provided by Applicant. Refer to comment c.

c. The limit of grading/disturbance for the proposed improvements appears to comprise the entire property limits, including some off-tract elements.

   Partially Provided by Applicant.

   The plan indicates a wood line to the north and east of the property. The extent of disturbance is unknown without knowing the wood line before clearing.

   Please indicate the previous wood line or provide a note on the plans.

   Testimony should be provided to address any concerns with adjoining property owners pertaining to off-tract disturbance.

   The current purpose of Sheet 2 is unclear and is not as complete as the previous submission.

d. The applicant also notes the installation of a retaining wall within the unnamed 10' right of way to the south of the tracts, with no limit of disturbance or grading shown. The applicant shall provide evidence regarding title to this right of way, and under what authority they propose to install said improvements.

   The Applicant has noted in their response letter that it will be addressed during testimony.

   Acceptable.

e. It is my understanding that the prior dwelling on lot 9 utilized a septic system. The location and disposition of this should be shown on the plans.

   Partially provided by Applicant.

Sheet 2 indicates the septic tank and one cleanout on existing Lot 9. The disposal bed and service lateral, as part of the system, is requested to be shown. Please provide documentation from the Health Department that the system has been or will be properly removed.

f. It is presumed that the proposed dwellings will have to connect into the Borough's sanitary sewer system located in Valley Avenue. The applicant shall review and identify their proposed method of connection, which may involve use of the 10' right of way previously mentioned.

The Applicant proposes to provide 4-inch lateral connections to the rear of the dwellings to the 10 ft right-of-way. A 6-inch sanitary sewer line will be constructed within the 10 ft wide right of way and connect to an existing sewer manhole located on Valley Avenue.

A profile of the lateral connection from the proposed dwelling to the manhole connection on Valley Avenue is required to demonstrate acceptable coverage, depths, and slopes.

As noted in Comment D, the applicant shall provide evidence regarding title to the 40 ft. wide right of way, and under what authority they propose to install said improvements.

g. In addition to the above, the applicant shall identify means of utility connections for water and electric at a minimum and identify their locations on the plans.

Provided by Applicant.

Water, gas, and electric service connections are shown within North Peak Street on the plan.

A utility easement may be required for the existing gas service on Proposed Lot 8, which extends to Proposed Lot 9.

h. The applicant shall document compliance with the Steep Slope Ordinance found at 21-84.B and provide calculations as required therein. In addition, means and methods for controlling velocity and rate of stormwater runoff shall be documented.

Continuing Comment – The applicant is requesting variance relief from the Steep Slope Ordinance. The property contains slopes greater than 20%. Considering this factor and the extent of improvements proposed, I recommend the applicant demonstrate compliance with all requirements of 21-84B prior to being deemed complete.

Not provided by Applicant.

This review agrees with the continuing comment.

Applicant continues to request variance relief or a waiver from the Steep Slope Ordinance.

Applicant states, in their response letter, "The grading shown on the plan was obtained from a plan prepared by Eastern Civil Engineering. The Applicant is requesting a waiver from compliance to the steep slope ordinance since the proposed grading eliminates all slopes greater than 15%."

Applicant also states, in their response letter, "*Stormtech Chambers* will be installed in the rear yards of each property. The chamber will temporarily store roof runoff during a storm event to control the stormwater runoff. The bottom of the chambers are open and are installed on clean stone which allow the stored water to percolate into the ground. Roof leaders will be hard piped directly to the chambers. Details, size, and specification will be provided by the applicant."

The Applicant is requested to provide a slope area calculation table noting existing and proposed areas of slopes per criteria. The analysis for the Slope Ordinance not only pertains to the subject property but also 100 ft from the boundary of the property. There are slopes greater than 15% as shown on Sheet 2 and the proposed front yard grading on Sheet 3.

i. The proposed grading will need to be revised. The proposed contours slope down towards the dwelling, garage, and rear yards. Runoff needs to be redirected away from the dwelling and garage. No runoff is permitted on adjoining properties.

The proposed retaining wall may impede runoff. Provide information on how the runoff will be addressed in the rear yards and without any impact on the adjoining lots.

j. The proposed retaining wall is very close to the existing retaining walls for Lot 7. The proposed height of the retaining wall in the south corner of Lot 8 is 7.7 ft higher than that of the existing retaining wall on Lot 7.

There are also significant retaining wall heights up to 13.5 ft.

More information is required to determine the impact the new retaining walls will have on the existing dwellings and walls.

k. Please explain the purpose of the proposed retaining wall located in the existing 10 ft. wide right-of-way.

l. It is recommended that a performance bond be required for improvements within North Peak Street and the sanitary sewer extension along the 10 ft wide right-of-way.

V. CONCLUSION

This application remains incomplete.

In addition, there are multiple important engineering issues that cannot be disconnected from the minor subdivision. The licensed land surveyor is inappropriately including engineering items on the plan and providing engineering review responses to the Borough.

It is required that a Minor Site Plan application and plans be prepared by a licensed professional engineer and submitted.

Should you have any questions, please do not hesitate to contact me.

Very truly yours,

Carmela Roberts, P.E., C.M.E., C.P.W.M.
Land Use Board Engineer

cc: Michael Muscillo, Borough Administrator, (mmuscillo@highlandsborough.org)
Austin Mueller, Esq., Land Use Board Attorney (amueller@weiner.law)
Courtney Lopez, Zoning Officer (clopez@highlandsborough.org)
Charles Farkouh, Applicant (GNF718@aol.com)
Michael A. Bruno, Esq., Applicant's Attorney (mbruno@ghclaw.com)
Cameron Corini, P.E., C.M.E., C.P.W.M., Roberts Engineering Group, LLC
GS Bachman, E.I.T., Roberts Engineering Group, LLC

PLOT PLAN
FOR
32 NORTH PEAK STREET
BLOCK 35, LOTS 8 & 9
SITUATED IN
BOROUGH OF HIGHLANDS, MONMOUTH COUNTY, NEW JERSEY

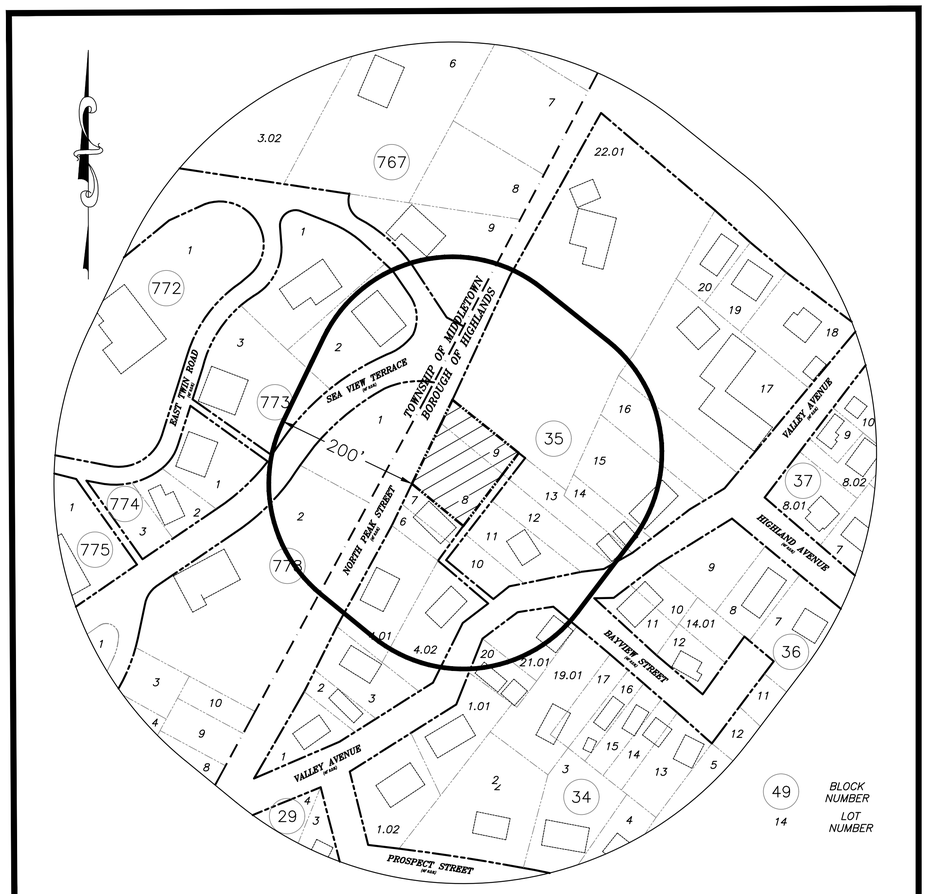

KEY MAP
SCALE: 1"=100'

PROPERTY OWNERS WITHIN 200 LF

LIST OF OWNERS WITHIN 200 FEET			LIST OF OWNERS WITHIN 200 FEET (CONTINUED)		
BLOCK	LOT	PROPERTY OWNER	BLOCK	LOT	PROPERTY OWNER
758	1.01	MONMOUTH HILLS INC. ACCESS PROP MGMT 1090 KING GEORGES POST RD EDISON, NJ 08837	35	22.01	DIEBOLD RICHARD & MISCHELE 221 NAVESINK AVENUE HIGHLANDS, NJ 07732
778	1	MONMOUTH HILLS INC. ACCESS PROP MGMT 1090 KING GEORGES POST RD EDISON, NJ 08837	35	4.02	MALONE PATRICK FRANCIS & PAULA ANN 110 VALLEY AVENUE HIGHLANDS, NJ 07732
35	6	ALVATOR DONNA 10 NORTH PEAK STREET HIGHLANDS, NJ 07732	35	15	AKER EDWARD W & EVELYN 92 VALLEY AVENUE HIGHLANDS, NJ 07732
35	10	DORIN JOSEPH & JOSEPH DORIN LM 102 VALLEY AVENUE HIGHLANDS, NJ 07732	767	9	FARROW LEONILDA A & CECIL W PO BOX 646 NAVESINK, NJ 07752
35	12	DORIN JOSEPH & JOSEPH DORIN LM 102 VALLEY AVENUE HIGHLANDS, NJ 07732	778	2	ONEIL MICHAEL & KATHY 34 SEAVIEW TERR HIGHLANDS, NJ 07732
35	8	FELICIANO JERRY 202 N BROUGHTON SQUARE BOYNTON BEACH, FL 33436	774	1	MCALEVY COLLEEN FLINN 38 E TWIN RD HIGHLANDS, NJ 07732
35	14	NEWMAN SR. RONALD & NANCY 94 VALLEY AVENUE HIGHLANDS, NJ 07732	773	2	REINAUER CRAIG 32 SEAVIEW TERR HIGHLANDS NJ 07732
34	20	109 VBALLEY AVE LLC 13 JARED LANE LITTLE EGG HARBOR, NJ 08087	773	3	GLASS KEITH 37 E TWIN RD HIGHLANDS, NJ 07750
35	7	ALVATOR DONNA 10 NORTH PEAK STREET HIGHLANDS, NJ 07732	35	16	FENDICK KERRY & VALENCIA ENRIQUE 78 VALLEY AVE HIGHLANDS, NJ 07732
34	1.01	LEMEGA JERRY & NADIYA 111 VALLEY AVE HIGHLANDS, NJ 07732	35	17	VALLEY AVENUE MANAGEMENT LLC 82 VALLEY AVENUE HIGHLANDS, NJ 07732
34	21.01	WAGNER PETER 101 VALLEY AVENUE HIGHLANDS, NJ 07732	35	4.01	JOHNSON EDWARD W 2 NORTH PEAK STREET HIGHLANDS, NJ
35	11	DORIN JOSEPH & JOSEPH DORIN 102 VALLEY AVENUE HIGHLANDS, NJ 07732	773	1	PHAIR ARTHUR H & KUGELMANN 36 E TWIN ROAD HIGHLANDS, NJ 07732
35	9	HOME & LAND DEVELOPMENT CORP 88-1 PORTLAND ROAD HIGHLANDS, NJ 07732	767	6	
36	11	BRANIN GARY & PAMELA 97 VALLEY AVE HIGHLANDS, NJ 07732	61	10	
35	13	SERGHIS DEMETRIOUS 96 VALLEY AVENUE HIGHLANDS, NJ 07732	61	12.01	

INDEX OF UTILITIES

UTILITY AND GOVERNMENTAL AGENCY TO BE NOTIFIED

JCP&L
300 MADISON AVENUE
PO BOX 1911
MORRISTOWN, NJ 07960

NEW JERSEY AMERICAN WATER COMPANY
ATTN: CONSTRUCTION DEPARTMENT
661 SHREWSBURY AVE
SHREWSBURY, NJ 07702

COMCAST COMMUNICATIONS OF MONMOUTH COUNTY
RON BERTRAND, CONSTRUCTION FOREMAN
403 SOUTH ST
EATONTOWN, NJ 07724

VERIZON COMMUNICATIONS
ONE VERIZON WAY
BASKING RIDGE, NJ 07920

TOWNSHIP OF MIDDLETOWN SEWERAGE AUTHORITY
RAYMOND J. NIERSTEDT, P.E., EXECUTIVE DIRECTOR
PO POX 205, 100 BEVERLY WAY
BELFORD , NJ 07718

NJ NATURAL GAS COMPANY
PO BOX 1464, 1415 WYCKOFF ROAD
WALL, NJ 07719

MONMOUTH COUNTY BAYSHORE OUTFALL AUTHORITY
ATTN: EXECUTIVE DIRECTOR
PO BOX 184, 200 HARBOR WAY
BELFORD, NJ 07718

SURVEY/SUBDIVISION REFERENCES:

1. BOUNDARY AND TOPOGRAPHIC INFORMATION TAKEN FROM A PLAN ENTITLED "MINOR SUBDIVISION OF LOTS 8 & 9 ~ BLOCK 35, 32 & 14 NORTH PEAK STREET, BOROUGH OF HIGHLANDS, MONMOUTH COUNTY, NEW JERSEY", PREPARED BY THOMAS P. SANTRY, P.A., SIGNED THOMAS P. SANTRY, JR., P.L.S., LICENSE NO. 24GS3540000, DATED 07-29-2022, REVISED THROUGH 11-30-2023.
2. ADDITIONAL INFORMATION TAKEN FROM A SURVEY ENTITLED "SURVEY OF LOTS 8 & 9 ~ BLOCK 35, 32 & 14 NORTH PEAK STREET, BOROUGH OF HIGHLANDS, MONMOUTH COUNTY, NEW JERSEY", PREPARED BY THOMAS P. SANTRY, P.A., ENGINEERS AND SURVEYORS, DATED 07-08-2022.

SUBDIVISION NOTES:

1. TOPOGRAPHY AND GRADING OBTAINED FROM A CERTAIN MAP ENTITLED "GRADING PLAN FOR HOME & LAND. DEVELOPMENT CORP. BLOCK 35 LOT 9" SAID MAP WAS DRAWN BY EASTERN CIVIL ENGINEERING, LLC ON 2/10/22. PROJECT NO. 2101980
2. SILT FENCE SHALL BE PLACED AROUND THE PERIMETER OF THE LIMITS OF DISTURBANCE AND REMAIN UNTIL SOIL IS STABILIZED
3. APPLICANT TO REPAIR ANY DAMAGED CURB OR PAVEMENT AS PART OF CONSTRUCTION
4. ELEVATIONS SHOWN HEREON REFER TO NORTH AMERICAN VERTICAL DATUM OF 1988
5. VARIANCE REQUESTED STEEP SLOPES ANALYSIS
6. NO WETLANDS EXIST ON THIS PROPERTY (SUBDIVISION SHEET 1 OF 3)

SURVEY NOTES:

1. BOUNDARY AND TOPOGRAPHIC INFORMATION TAKEN FROM A PLAN ENTITLED "PRELIMINARY GRADING WORKSHEET FOR HOME & LAND. DEVELOPMENT CORP. BLOCK 35 LOTS 8 AND 9, TAX MAP SHEET NO. 10, HIGHLANDS BOROUGH, MONMOUTH COUNTY, NEW JERSEY", PREPARED BY EASTERN CIVIL ENGINEERING, LLC, SIGNED ANDREW R. STOCKTON, P.E., N.J.P.L.S., LICENSE NO. 35405, DATED 12-02-2021.
2. ELEVATIONS ARE BASED ON NAVD88 DATUM.

INDEX OF SHEETS

SHEET No.	TITLE
1	COVER SHEET
2	PLOT PLAN
3	UTILITY PLAN
4	SLOPE ANALYSIS PLAN
5	CUT/FILL CROSS SECTIONS AND CALCULATIONS
6	SOIL EROSION AND SEDIMENT CONTROL PLAN
7	SOIL EROSION AND SEDIMENT CONTROL NOTES AND DETAILS
8	CONSTRUCTION DETAILS – 1

ZONE REQUIREMENTS

R-1.01 ZONE SINGLE-FAMILY RESIDENTIAL	BULK ZONE REQUIREMENTS	EXISTING LOTS 8 & 9	PROPOSED LOT 8	PROPOSED LOT 9
MINIMUM LOT SIZE (SF)	5,000 S.F.	13,423 S.F.	7,775.37 S.F.	5,658.99 S.F.
MINIMUM LOT FRONTAGE/WIDTH (FT)	50 FT.	130.26/127.62	79.23 FT.	50.93 FT.
MINIMUM LOT DEPTH (FT)	100 FT.	105.26	108.08 FT.	118.28 FT.
MINIMUM FRONT SETBACK (FT)	35 FT.	60.6 FT.	35.3 FT.	*31.9 FT.
MINIMUM SIDE SETBACK (FT)	8/12 FT.	**4.7/92.2 FT.	8.3/12 FT.	8.2/12 FT.
MINIMUM REAR SETBACK (FT)	25 FT.	**8.6 FT.	25 FT.	25 FT.
MAXIMUM BUILDING HEIGHT (FT)	30 FT.	–	<30 FT.	<30 FT.
MAXIMUM LOT COVER (%)	70%	±41.9%	39.0%	34.2%
MAXIMUM BUILDING COVERAGE (%)	30%	±8.0%	26.1%	22.5%
*** MAXIMUM LOT COVERAGE (%)	33.4%, 45.8%	**±41.9%	*39.0%	34.2%
*** MAXIMUM IMPERVIOUS COVERAGE (%)	15.8%, 21.2%	**±41.9%	*39.0%	*34.2%

* VARIANCE REQUIRED
** EXISTING NONCONFORMING CONDITION
*** PER STEEP SLOPES ORDINANCE AND CALCULATIONS

WATER REQUIREMENTS

WATER FLOW CALCULATIONS:

EXISTING:
1 ONE-BEDROOM UNIT @ 95 GALLONS PER DAY ..... 120 GALLONS PER DAY
TOTAL EXISTING FLOW ..... 120 GALLONS PER DAY

PROPOSED:
1 THREE-BEDROOM UNIT @ 225 GALLONS PER DAY ..... 225 GALLONS PER DAY
1 FOUR-BEDROOM UNIT @ 395 GALLONS PER DAY ..... 395 GALLONS PER DAY
TOTAL PROPOSED FLOW ..... 620 GALLONS PER DAY

FLOW CHANGE = INCREASE ..... 500 GALLONS PER DAY

SEWER REQUIREMENTS

SEWER FLOW CALCULATIONS:

EXISTING:
1 ONE-BEDROOM UNITS @ 150 GALLONS PER DAY ..... 150 GALLONS PER DAY
TOTAL EXISTING FLOW ..... 150 GALLONS PER DAY

PROPOSED:
1 THREE-BEDROOM UNIT @ 300 GALLONS PER DAY ..... 300 GALLONS PER DAY
1 FOUR-BEDROOM UNIT @ 300 GALLONS PER DAY ..... 300 GALLONS PER DAY
TOTAL PROPOSED FLOW ..... 600 GALLONS PER DAY

FLOW CHANGE = INCREASE ..... 450 GALLONS PER DAY

REVISIONS

DATE	DESCRIPTION
08-22-2024	REPLACED SANITARY SEWER WITH SEPTIC SYSTEM
08-07-2024	REVISED FOR BOROUGH AND FSCD SUBMISSION
04-25-2024	ISSUED FOR SUBMISSION

THE OWNER AND CONTRACTOR SHALL HOLD HARMLESS THE ENGINEER FROM AND AGAINST ALL CLAIMS, DAMAGES, LOSSES AND EXPENSES INCLUDING ATTORNEY'S FEES ARISING OUT OF OR RESULTING FROM THE PERFORMANCE OF THE WORK BY THE CONTRACTOR. CHANGES TO THE PLANS BY THE OWNER AND THE CONTRACTOR SHALL BE THE RESPONSIBILITY OF THE PERSONS MAKING SUCH CHANGES. THE CONTRACTOR SHALL CHECK AND VERIFY ALL PLAN DIMENSIONS AND CONDITIONS BEFORE PROCEEDING WITH CONSTRUCTION.

COVER SHEET

32 NORTH PEAK STREET
BLOCK 35, LOTS 8 & 9

SITUATED IN
BOROUGH OF HIGHLANDS
MONMOUTH COUNTY, NEW JERSEY

GROTTO ENGINEERING ASSOCIATES, LLC
ENGINEERS • PLANNERS • SURVEYORS
Certificate of Authorization No. 24GA27918300
77 BRANT AVENUE - SUITE 105
CLARK, NEW JERSEY 07066
908-272-8901 (F) 908-272-8902

FRANK W. FARRELL
PROFESSIONAL ENGINEER
NEW JERSEY LICENSE NO. GE51556

DATE: 04-05-2024	SCALE: AS SHOWN	DRAWN: AJC	CHECKED: FWF	SHEET: 1 OF 8	JOB: PR-0290

G:\Grotto Projects\PR-0290 - 32 North Peak St., Highlands (Charlie Farkash)\PLOT PLAN\PR-0290 - 32 North Peak St., Highlands (Charlie Farkash) - 8.22.24.dwg 8/22/2024

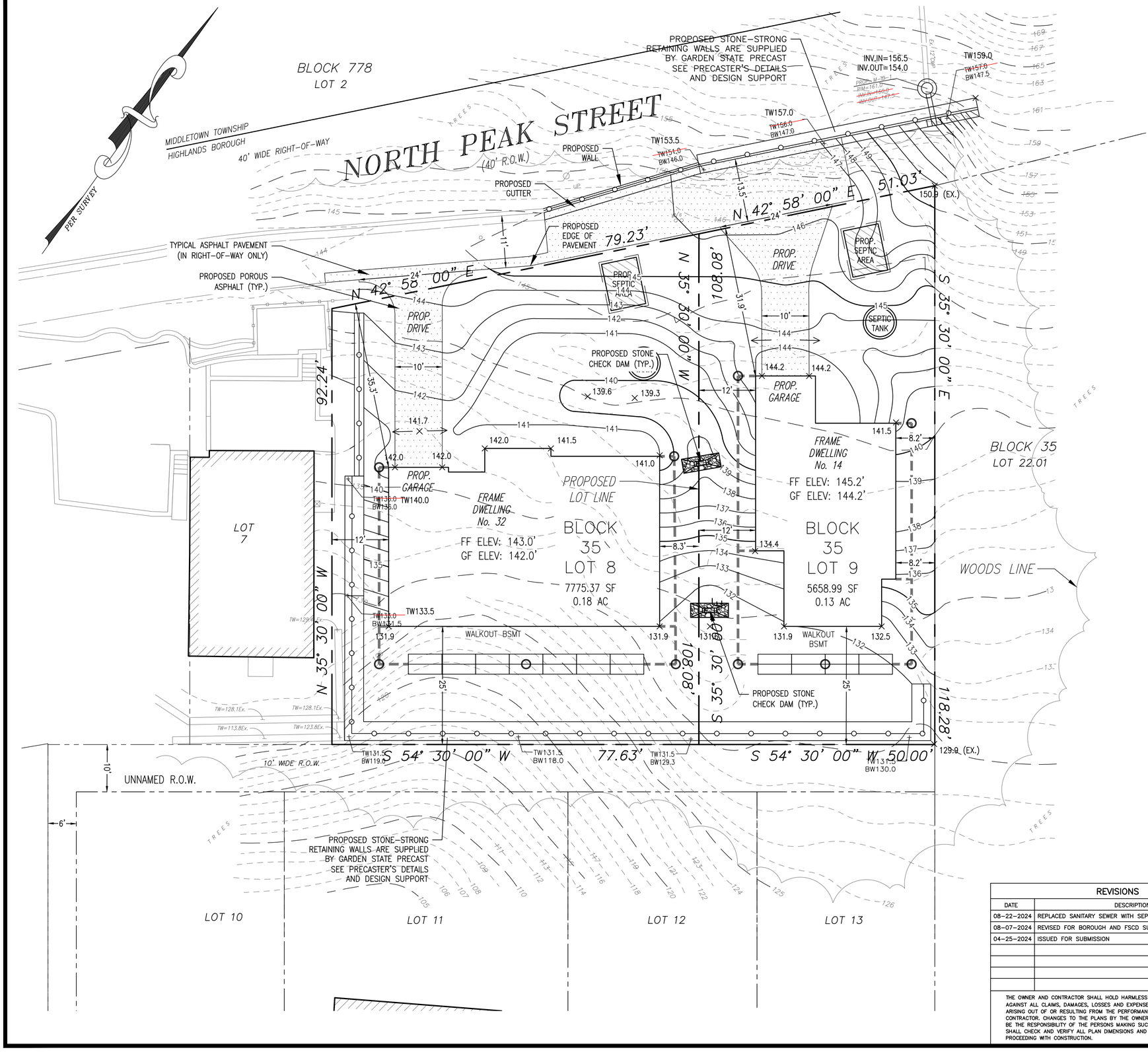

GENERAL NOTES

1. THE CONTRACTOR SHALL NOTIFY THE UNDERSIGNED PROFESSIONAL IMMEDIATELY IF ANY FIELD CONDITIONS ENCOUNTERED DIFFER FROM THOSE REPRESENTED HEREON AND/OR IF IN THE OPINION OF THE CONTRACTOR SUCH CONDITIONS SHOULD RENDER THE DESIGNS SHOWN HEREON INAPPROPRIATE OR INEFFECTIVE.
2. THE CONTRACTOR IS TO CONTACT THE "CALL BEFORE YOU DIG" TOLL FREE NUMBER AT 1-800-272-1000 THREE (3) BUSINESS DAYS BUT NO MORE THAN TEN (10) BUSINESS DAYS PRIOR TO THE START OF CONSTRUCTION. THE CONTRACTOR SHALL IMMEDIATELY REPORT ANY DAMAGE CAUSED OR DISCOVERED DURING CONSTRUCTION TO THE APPROPRIATE UTILITY AGENCY.
3. ALL UTILITIES WILL BE INSTALLED UNDERGROUND.
4. ALL MATERIALS, WORKMANSHIP AND CONSTRUCTION FOR SITE IMPROVEMENTS SHOWN HEREON SHALL BE IN ACCORDANCE WITH THE FOLLOWING:
   A. CURRENT PREVAILING MUNICIPAL AND/OR COUNTY SPECIFICATIONS, STANDARDS, AND REQUIREMENTS.
   B. CURRENT PREVAILING UTILITY COMPANY SPECIFICATIONS, STANDARDS, AND REQUIREMENTS.
   C. STATE OF NEW JERSEY B.O.C.A. CODE AND BARRIER-FREE DESIGN REGULATIONS AS CURRENTLY AMENDED. BARRIER-FREE FACILITIES, INCLUDING PARKING SPACES AND RAMPS, SHALL BE PROVIDED AS REQUIRED BY THE AMERICANS WITH DISABILITIES ACT OF 1991.
   D. DO NOT SCALE DRAWINGS ADJACENT AND SURROUNDING PHYSICAL CONDITIONS. BUILDINGS, STRUCTURES, ETC. ARE SCHEMATIC ONLY, EXCEPT WHERE DIMENSIONS ARE SHOWN THERETO.
5. THIS IS A SITE PLAN AND UNLESS SPECIFICALLY NOTED ELSEWHERE HEREON IS NOT A SURVEY.
6. THIS SET OF PLANS HAS BEEN PREPARED FOR PURPOSES OF MUNICIPAL AND AGENCY REVIEW AND APPROVAL AND SHALL NOT BE UTILIZED AS A CONSTRUCTION DOCUMENT UNTIL ALL CONDITIONS OF APPROVAL HAVE BEEN SATISFIED ON THE DRAWINGS AND EACH DRAWING HAS BEEN REVISED TO INDICATE "ISSUED FOR CONSTRUCTION".
7. EXISTING UTILITY INFORMATION SHOWN HEREON HAS BEEN COLLECTED FROM VARIOUS SOURCES AND IS NOT GUARANTEED AS TO ACCURACY OR COMPLETENESS. THE CONTRACTOR SHALL FIELD VERIFY ALL INFORMATION TO HIS SATISFACTION PRIOR TO EXCAVATION. WHERE EXISTING UTILITIES ARE TO BE CROSSED BY PROPOSED CONSTRUCTION, TEST PITS SHALL BE DUG BY THE CONTRACTOR PRIOR TO CONSTRUCTION TO ASCERTAIN EXISTING INVERTS, MATERIALS AND SIZES. TEST PIT INFORMATION SHALL BE GIVEN TO THE ENGINEER PRIOR TO CONSTRUCTION TO PERMIT ADJUSTMENTS AS MAY BE REQUIRED TO AVOID CONFLICTS.
8. DISTURBED AREAS TO BE RESTORED TO SATISFACTION OF THE CITY ENGINEER.
9. ALL CONSTRUCTION MATERIALS AND MISCELLANEOUS DEBRIS SHALL BE REMOVED AND DISPOSED OF BY THE CONTRACTOR.
10. BEFORE CONSTRUCTION, TEST PITS WILL BE DONE TO ASCERTAIN THE LEVEL OF THE EXISTING WATER TABLE. TEST RESULTS SHALL BE SUBMITTED TO THE CITY ENGINEER.
11. AT THE TIME OF CONSTRUCTION, THE CONTRACTOR SHALL LOCATE EXISTING GAS, WATER, AND SANITARY MAINS, AND PROVIDE THE CITY ENGINEER WITH THE LOCATIONS, SIZES AND PIPE MATERIAL FOR SAME.
12. ALL EXISTING SERVICES SHALL BE CAPPED AND ABANDONED IN ACCORDANCE WITH APPLICABLE STANDARDS. REUSE OF EXISTING CONNECTIONS WILL NOT BE ACCEPTED.

PARKING REQUIREMENTS

PARKING REQUIREMENTS FOR THE PROPOSED DEVELOPMENT ARE BASED ON NEW JERSEY ADMINISTRATIVE CODE FOR "RESIDENTIAL SITE IMPROVEMENT STANDARDS" (RSIS) TABLE 4.4 "FOR MAXIMUM NUMBER OF [OFF-STREET] PARKING SPACES..." FOR FOUR-BEDROOM HOUSING UNITS IN SINGLE-FAMILY DETACHED DWELLINGS.

(1) THREE-BEDROOM UNIT @ 2 SPACES PER UNIT..... 2.0 SPACES
(1) FOUR-BEDROOM UNIT @ 2.5 SPACES PER UNIT..... 2.5 SPACES

TOTAL SPACES REQUIRED..... 4 SPACES
TOTAL SPACES PROVIDED..... 4 SPACES

NJAC 5:21-4.14(d)2. A ONE-CAR GARAGE AND DRIVEWAY COMBINATION SHALL COUNT AS 2.0 OFF-STREET PARKING SPACES, PROVIDED
THE DRIVEWAY MEASURES A MINIMUM OF 18 FEET IN LENGTH BETWEEN THE FACE OF THE GARAGE DOOR AND THE RIGHT-OF-WAY.

NJAC 5:21-4.14 <A> WHEN DETERMINATION OF THE REQUIRED NUMBER OF PARKING SPACES RESULTS IN A FRACTIONAL SPACE FOR THE ENTIRE DEVELOPMENT, ANY FRACTION OF ONE-HALF OR LESS MAY BE DISREGARDED, WHILE A FRACTION IN EXCESS OF ONE-HALF SHALL BE COUNTED AS ONE PARKING SPACE.

GRAPHIC SCALE

10 0 5 10 20 40

(IN FEET)
1 inch = 10 ft.

REVISIONS	
DATE	DESCRIPTION
08-22-2024	REPLACED SANITARY SEWER WITH SEPTIC SYSTEM
08-07-2024	REVISED FOR BOROUGH AND FSCD SUBMISSION
04-25-2024	ISSUED FOR SUBMISSION

THE OWNER AND CONTRACTOR SHALL HOLD HARMLESS THE ENGINEER FROM AND AGAINST ALL CLAIMS, DAMAGES, LOSSES AND EXPENSES INCLUDING ATTORNEY'S FEES ARISING OUT OF OR RESULTING FROM THE PERFORMANCE OF THE WORK BY THE CONTRACTOR. CHANGES TO THE PLANS BY THE OWNER AND THE CONTRACTOR SHALL BE THE RESPONSIBILITY OF THE PERSONS MAKING SUCH CHANGES. THE CONTRACTOR SHALL CHECK AND VERIFY ALL PLAN DIMENSIONS AND CONDITIONS BEFORE PROCEEDING WITH CONSTRUCTION.

PLOT PLAN

32 NORTH PEAK STREET
BLOCK 35, LOTS 8 & 9

SITUATED IN
BOROUGH OF HIGHLANDS
MONMOUTH COUNTY, NEW JERSEY

GROTTO ENGINEERING ASSOCIATES, LLC
ENGINEERS · PLANNERS · SURVEYORS
Certificate of Authorization No. 24GA27918300
77 BRANT AVENUE - SUITE 105
CLARK, NEW JERSEY 07066
908-272-8901 (F) 908-272-8902

FRANK W. FARRELL
PROFESSIONAL ENGINEER
NEW JERSEY LICENSE NO. GE51556

DATE: 04-05-2024	SCALE: 1"=10'	DRAWN: AJC	CHECKED: FWF	SHEET: 2 OF 8	JOB: PR-0290

G:\Grotto Projects\PR-0290 - 32 North Peak St, Highlands (Charles Farkosh)\DOT PLAN\PR-0290 - 32 North Peak St, Highlands (Charles Farkosh) - 8.22.24.dwg 8/22/2024

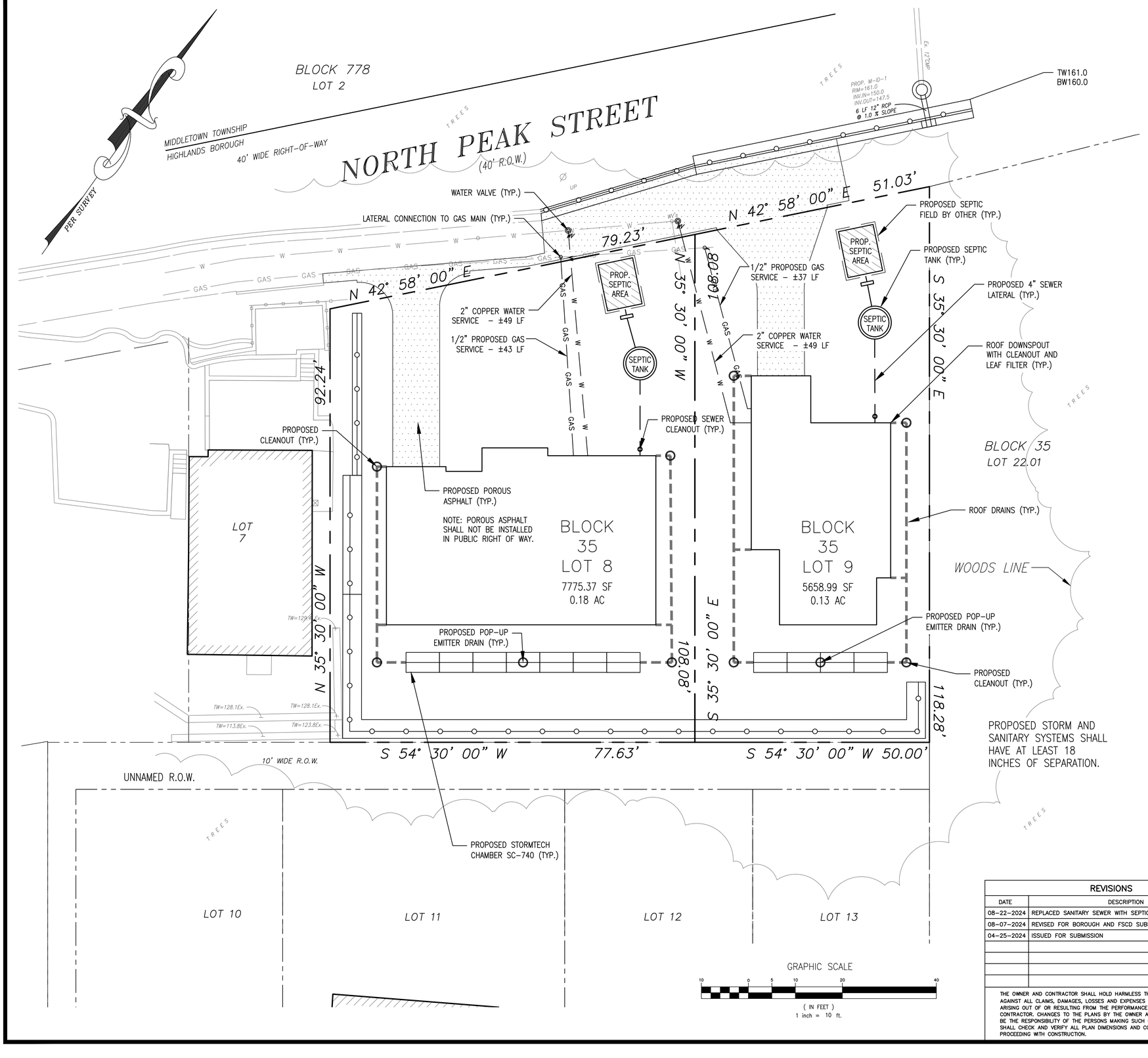

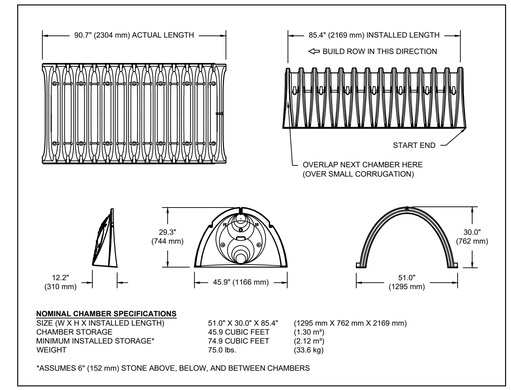

NOMINAL CHAMBER SPECIFICATIONS

SIZE (W X H X INSTALLED LENGTH)	51.0" X 30.0" X 85.4"	(1295 mm X 762 mm X 2169 mm)
CHAMBER STORAGE	45.9 CUBIC FEET	(1.30 m³)
MINIMUM INSTALLED STORAGE*	74.9 CUBIC FEET	(2.12 m³)
WEIGHT	75.0 lbs.	(33.6 kg)

*ASSUMES 6" (152 mm) STONE ABOVE, BELOW, AND BETWEEN CHAMBERS

STORMTECH SC-740 CHAMBER AND END CAP DETAIL

N.T.S.

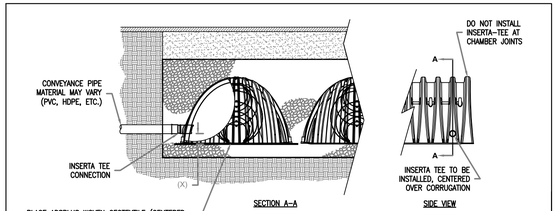

NOTES:
* CONTACT ADS ENGINEERING SERVICES IF INSERTA TEE INLET MUST BE RAISED AS NOT ALL INVERTS ARE POSSIBLE.

CHAMBER	MAX DIAMETER OF INSERTA TEE	HEIGHT FROM BASE OF CHAMBER (X)
SC-740	10"	4"
INSERTA TEE FITTINGS AVAILABLE FOR SDR 26, SDR 35, SCH 40 IPS GASKETED & SOLVENT WELD, N-12, HP STORM, C-900 OR DUCTILE IRON		

INSERTA-TEE SIDE INLET DETAIL

N.T.S.

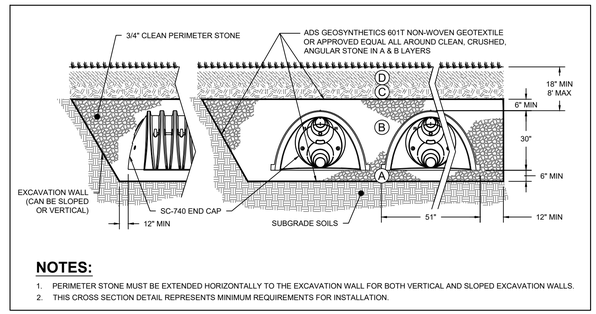

NOTES:

1. PERIMETER STONE MUST BE EXTENDED HORIZONTALLY TO THE EXCAVATION WALL FOR BOTH VERTICAL AND SLOPED EXCAVATION WALLS.
2. THIS CROSS SECTION DETAIL REPRESENTS MINIMUM REQUIREMENTS FOR INSTALLATION.

SC-740 CROSS SECTION DETAIL

N.T.S.

UTILITY PLAN

REVISIONS	
DATE	DESCRIPTION
08-22-2024	REPLACED SANITARY SEWER WITH SEPTIC SYSTEM
08-07-2024	REVISED FOR BOROUGH AND FSCD SUBMISSION
04-25-2024	ISSUED FOR SUBMISSION

THE OWNER AND CONTRACTOR SHALL HOLD HARMLESS THE ENGINEER FROM AND AGAINST ALL CLAIMS, DAMAGES, LOSSES AND EXPENSES INCLUDING ATTORNEY'S FEES ARISING OUT OF OR RESULTING FROM THE PERFORMANCE OF THE WORK BY THE CONTRACTOR. CHANGES TO THE PLANS BY THE OWNER AND THE CONTRACTOR SHALL BE THE RESPONSIBILITY OF THE PERSONS MAKING SUCH CHANGES. THE CONTRACTOR SHALL CHECK AND VERIFY ALL PLAN DIMENSIONS AND CONDITIONS BEFORE PROCEEDING WITH CONSTRUCTION.

32 NORTH PEAK STREET
BLOCK 35, LOTS 8 & 9

SITUATED IN
BOROUGH OF HIGHLANDS
MONMOUTH COUNTY, NEW JERSEY

GROTTO ENGINEERING ASSOCIATES, LLC
ENGINEERS • PLANNERS • SURVEYORS
Certificate of Authorization No. 24GA27918300
77 BRANT AVENUE - SUITE 105
CLARK, NEW JERSEY 07066
908-272-8901 (F) 908-272-8902

FRANK W. FARRELL
PROFESSIONAL ENGINEER
NEW JERSEY LICENSE NO. GE51556

DATE: 04-05-2024	SCALE: 1"=10'	DRAWN: AJC	CHECKED: FWF	SHEET: 3 OF 8	JOB: PR-0290

G:\Grotto Projects\PR-0290 - 32 North Peak St., Highlands (Charlie Farkash)\PLOT PLAN\PR-0290 - 32 North Peak St., Highlands (Charles Farkash) - 8.22.24.dwg 8/22/2024

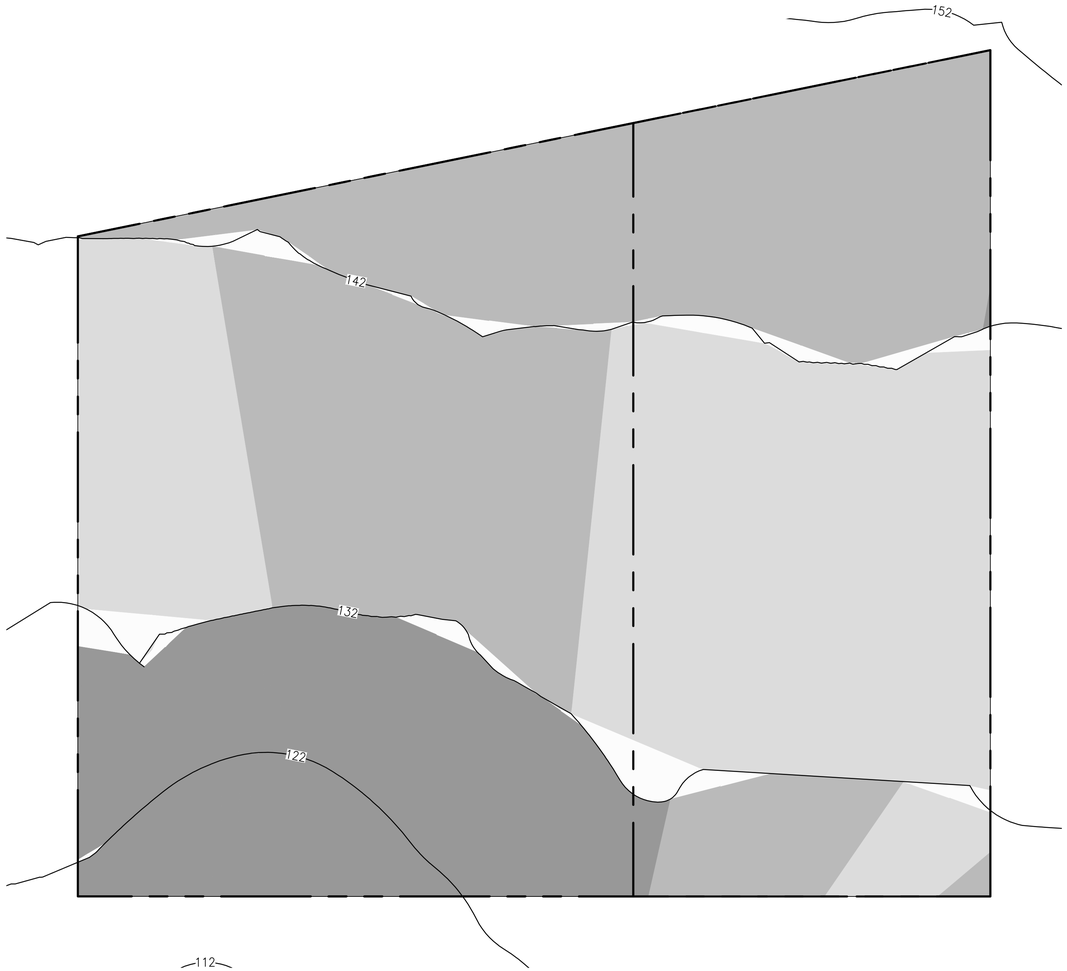

EXISTING SLOPES

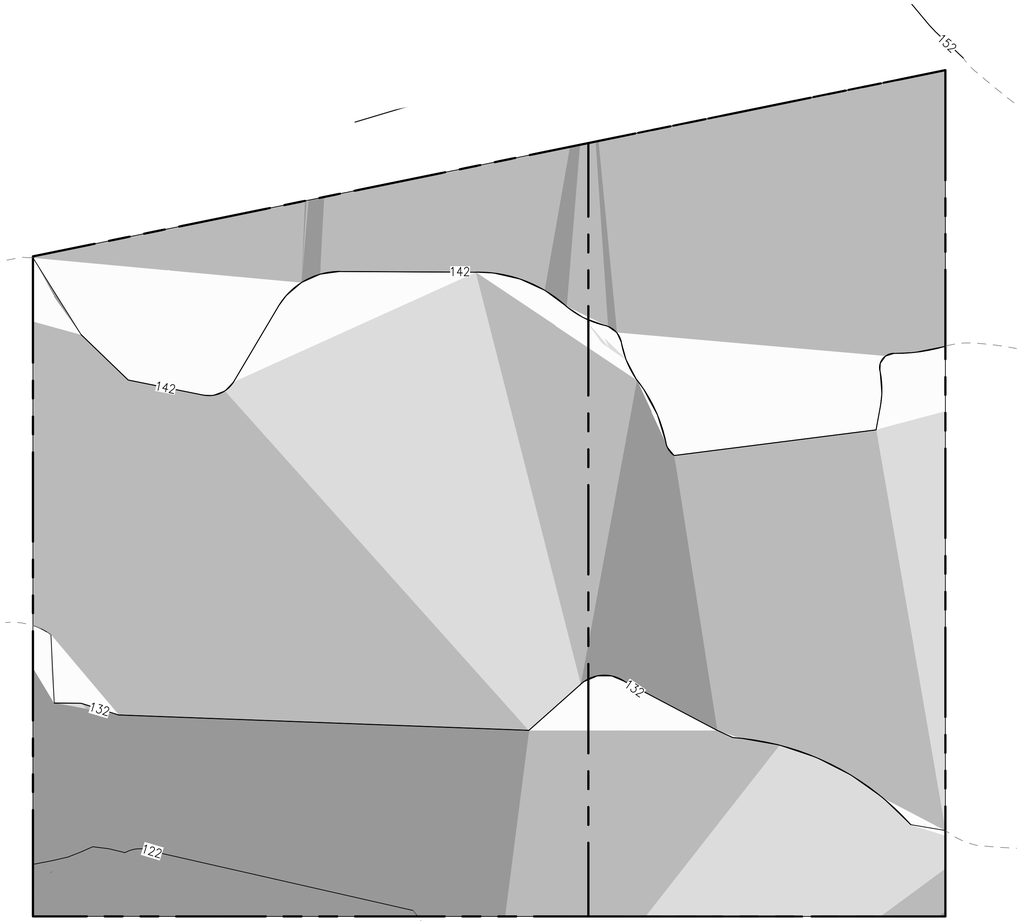

PROPOSED SLOPES

EXISTING SLOPE TABLE (BASED ON 10' CONTOURS, ELEV. 112' TO 162')

NUMBER	MINIMUM SLOPE	MAXIMUM SLOPE	COLOR	AREA (SF)	AREA (AC)
1	30.00%	1000.00%		2,703	0.062
2	20.00%	30.00%		5,593	0.128
3	15.00%	20.00%		4,732	0.109
4	0.00%	15.00%		397	0.009

PROPOSED SLOPE TABLE (BASED ON 10' CONTOURS, ELEV. 112' TO 162')

NUMBER	MINIMUM SLOPE	MAXIMUM SLOPE	COLOR	AREA (SF)	AREA (AC)
1	30.00%	1000.00%		2,438	0.056
2	20.00%	30.00%		7,206	0.165
3	15.00%	20.00%		2,350	0.054
4	0.00%	15.00%		1,429	0.033

SURVEY NOTES

1. BOUNDARY AND TOPOGRAPHIC INFORMATION TAKEN FROM A PLAN ENTITLED "PRELIMINARY GRADING WORKSHEET FOR HOME & LAND. DEVELOPMENT CORP. BLOCK 35 LOTS 8 AND 9, TAX MAP SHEET NO. 10, HIGHLANDS BOROUGH, MONMOUTH COUNTY, NEW JERSEY", PREPARED BY EASTERN CIVIL ENGINEERING, LLC, SIGNED ANDREW R. STOCKTON, P.E., N.J.P.L.S., LICENSE No. 35405, DATED 12-02-2021.
2. ELEVATIONS ARE BASED ON NAVD88 DATUM.

GRAPHIC SCALE

10 0 5 10 20 40

(IN FEET)
1 inch = 10 ft.

REVISIONS	
DATE	DESCRIPTION
08-22-2024	REPLACED SANITARY SEWER WITH SEPTIC SYSTEM
08-07-2024	REVISED FOR BOROUGH AND FSCD SUBMISSION
04-25-2024	ISSUED FOR SUBMISSION

THE OWNER AND CONTRACTOR SHALL HOLD HARMLESS THE ENGINEER FROM AND AGAINST ALL CLAIMS, DAMAGES, LOSSES AND EXPENSES INCLUDING ATTORNEY'S FEES ARISING OUT OF OR RESULTING FROM THE PERFORMANCE OF THE WORK BY THE CONTRACTOR. CHANGES TO THE PLANS BY THE OWNER AND THE CONTRACTOR SHALL BE THE RESPONSIBILITY OF THE PERSONS MAKING SUCH CHANGES. THE CONTRACTOR SHALL CHECK AND VERIFY ALL PLAN DIMENSIONS AND CONDITIONS BEFORE PROCEEDING WITH CONSTRUCTION.

SLOPE ANALYSIS PLAN

32 NORTH PEAK STREET
BLOCK 35, LOTS 8 & 9

SITUATED IN
BOROUGH OF HIGHLANDS
MONMOUTH COUNTY, NEW JERSEY

GROTTO ENGINEERING ASSOCIATES, LLC
ENGINEERS • PLANNERS • SURVEYORS
Certificate of Authorization No. 24GA27918300
77 BRANT AVENUE - SUITE 105
CLARK, NEW JERSEY 07066
908-272-8901 (F) 908-272-8902

FRANK W. FARRELL
PROFESSIONAL ENGINEER
NEW JERSEY LICENSE NO. GE51556

DATE: 04-05-2024	SCALE: 1"=20'	DRAWN: AJC	CHECKED: FWF	SHEET: 4 OF 8	JOB: PR-0290

G:\Grotto Projects\PR-0290 - 32 North Peak St., Highlands (Charlie Farlow)\PLOT PLAN\PR-0290 - 32 North Peak St., Highlands (Charlie Farlow) - 8.22.24.dwg 8/22/2024

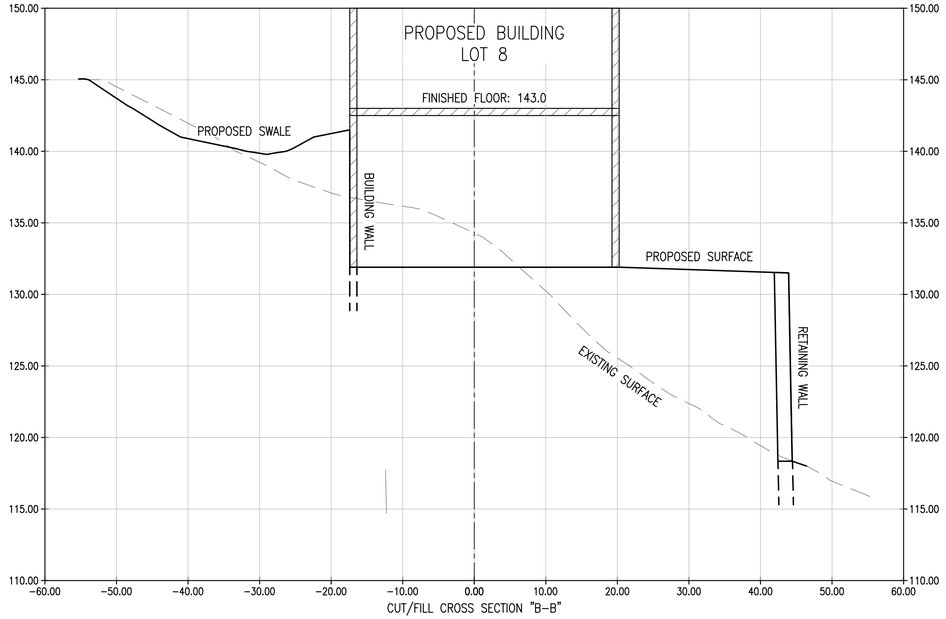

CUT/FILL CROSS SECTION "B–B"

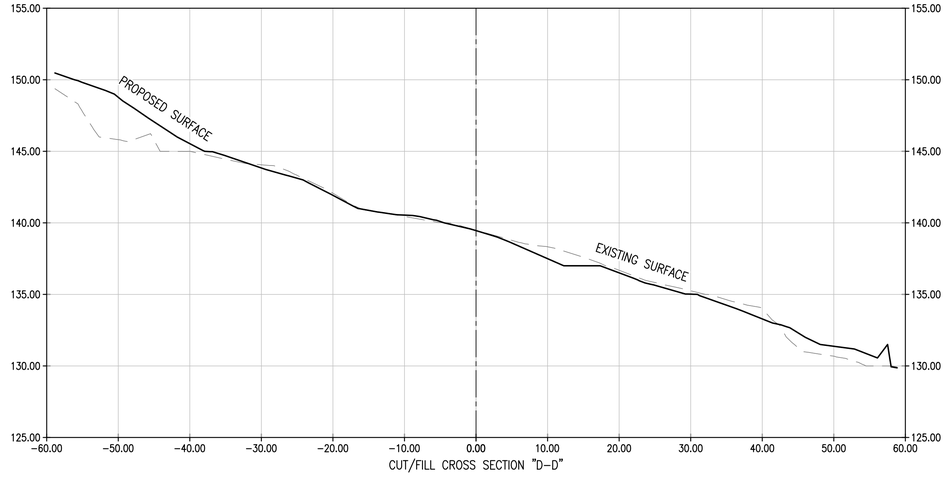

CUT/FILL CROSS SECTION "D–D"

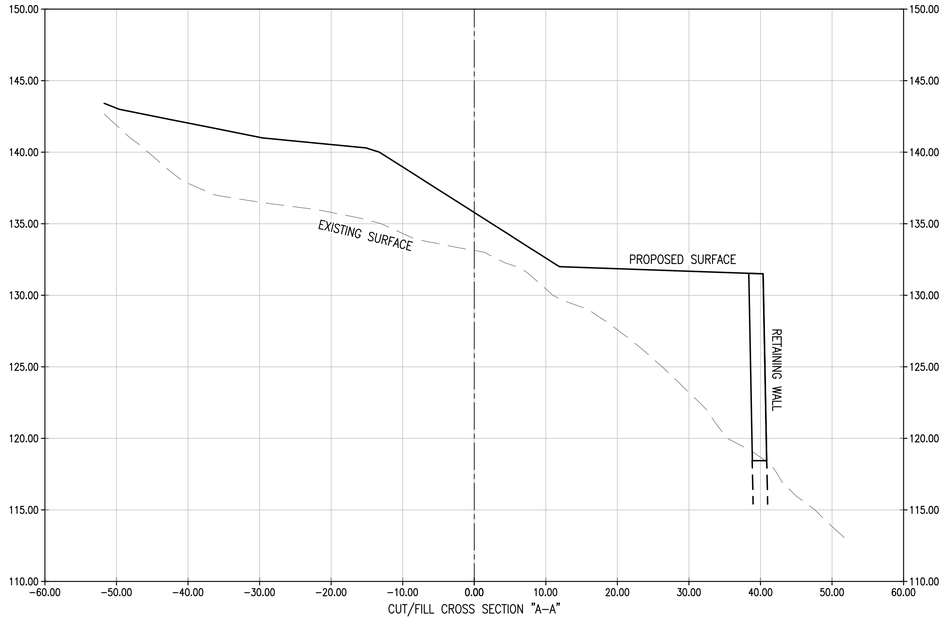

CUT/FILL CROSS SECTION "A–A"

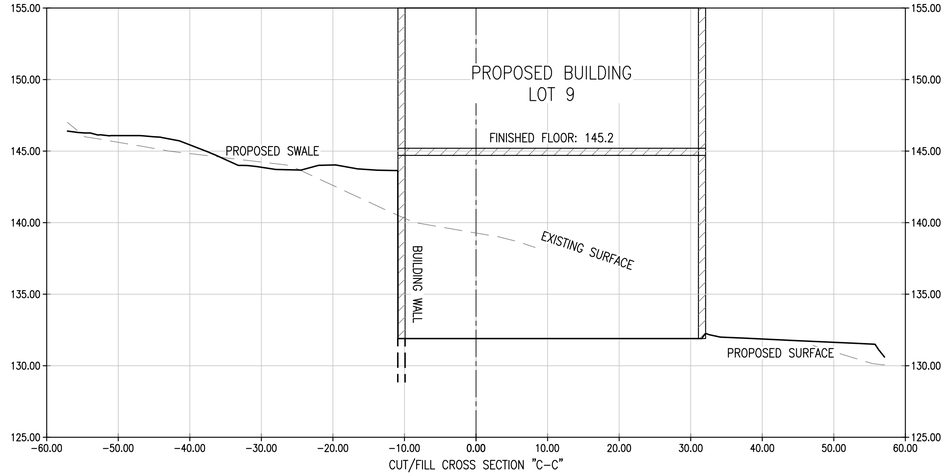

CUT/FILL CROSS SECTION "C–C"

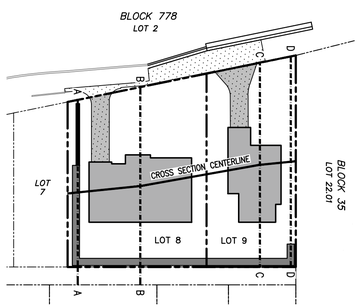

CROSS SECTION KEY MAP

CUT FILL CALCULATIONS:

THE FOLLOWING NUMBERS WERE GENERATED BY COMPARING THE EXISTING AND PROPOSED SURFACES IN AUTODESK CIVIL 3D USING THE "TIN VOLUME SURFACE" FEATURE:

TOTAL CUT = 691.60 CUBIC YARDS
TOTAL FILL = 952.46 CUBIC YARDS

RESULT: NET FILL = 260.86 CUBIC YARDS

THE PROPOSED DEVELOPMENT RESULTS IN A NET FILL OF 261 CY.

GRAPHIC SCALE

10 0 5 10 20 40

(IN FEET)
1 inch = 10 ft.

REVISIONS	
DATE	DESCRIPTION
08–22–2024	REPLACED SANITARY SEWER WITH SEPTIC SYSTEM
08–07–2024	REVISED FOR BOROUGH AND FSCD SUBMISSION
04–25–2024	ISSUED FOR SUBMISSION

THE OWNER AND CONTRACTOR SHALL HOLD HARMLESS THE ENGINEER FROM AND AGAINST ALL CLAIMS, DAMAGES, LOSSES AND EXPENSES INCLUDING ATTORNEY'S FEES ARISING OUT OF OR RESULTING FROM THE PERFORMANCE OF THE WORK BY THE CONTRACTOR. CHANGES TO THE PLANS BY THE OWNER AND THE CONTRACTOR SHALL BE THE RESPONSIBILITY OF THE PERSONS MAKING SUCH CHANGES. THE CONTRACTOR SHALL CHECK AND VERIFY ALL PLAN DIMENSIONS AND CONDITIONS BEFORE PROCEEDING WITH CONSTRUCTION.

CUT/FILL CROSS SECTIONS AND CALCULATIONS

32 NORTH PEAK STREET
BLOCK 35, LOTS 8 & 9

SITUATED IN
BOROUGH OF HIGHLANDS
MONMOUTH COUNTY, NEW JERSEY

GROTTO ENGINEERING ASSOCIATES, LLC
ENGINEERS · PLANNERS · SURVEYORS
Certificate of Authorization No. 24GA27918300
77 BRANT AVENUE - SUITE 105
CLARK, NEW JERSEY 07066
908-272-8901 (F) 908-272-8902

FRANK W. FARRELL
PROFESSIONAL ENGINEER
NEW JERSEY LICENSE NO. GE51556

DATE: 04–05–2024	SCALE: 1"=10'	DRAWN: AJC	CHECKED: FWF	SHEET: 5 OF 8	JOB: PR–0290

G:\Grotto Projects\PR-0290 – 32 North Peak St., Highlands (Charlie Forlow)\PLOT PLAN\Sheet 5 AND EXHIBIT A – EX AND PROP SURFACES.dwg 8/22/2024

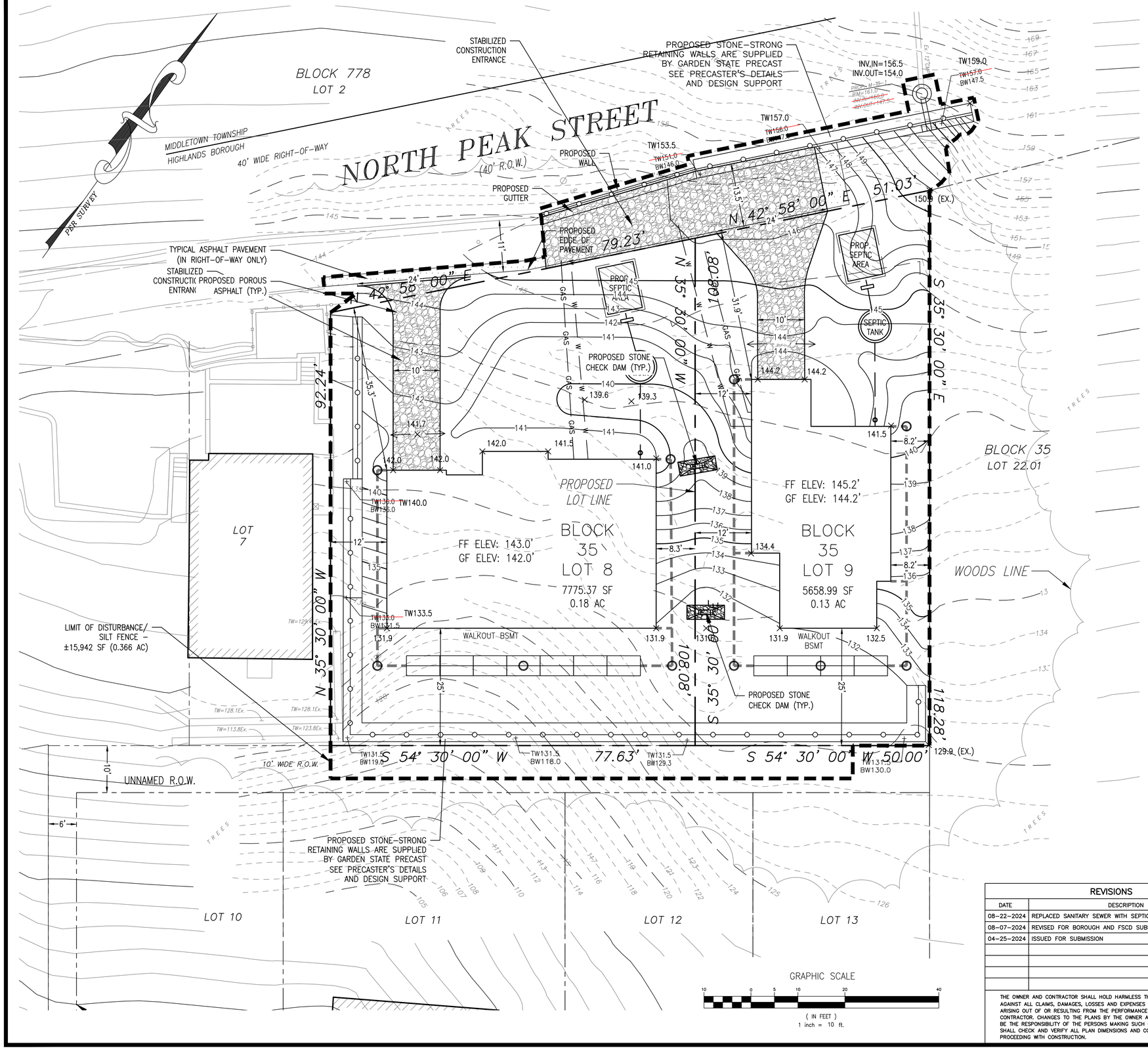

GRAPHIC SCALE

10 0 5 10 20 40

(IN FEET)
1 inch = 10 ft.

SOILS INFORMATION

BLOCK 35, LOTS 8 & 9 ARE LOCATED WITHIN PhbE (PHALANX LOAMY SAND)

LEGEND

– STABILIZED CONSTRUCTION ENTRANCE

– LIMIT OF DISTURBANCE/SILT FENCE

NOTE:
1. THIS PLAN TO BE USED FOR SOIL EROSION AND SEDIMENT CONTROL PURPOSES ONLY.
2. SEE SOIL EROSION AND SEDIMENT CONTROL NOTES AND DETAILS.
3. NO SOIL SHALL BE STOCKPILED ON SITE.

SOIL EROSION AND SEDIMENT CONTROL PLAN

REVISIONS	
DATE	DESCRIPTION
08–22–2024	REPLACED SANITARY SEWER WITH SEPTIC SYSTEM
08–07–2024	REVISED FOR BOROUGH AND FSCD SUBMISSION
04–25–2024	ISSUED FOR SUBMISSION

THE OWNER AND CONTRACTOR SHALL HOLD HARMLESS THE ENGINEER FROM AND AGAINST ALL CLAIMS, DAMAGES, LOSSES AND EXPENSES INCLUDING ATTORNEY'S FEES ARISING OUT OF OR RESULTING FROM THE PERFORMANCE OF THE WORK BY THE CONTRACTOR. CHANGES TO THE PLANS BY THE OWNER AND THE CONTRACTOR SHALL BE THE RESPONSIBILITY OF THE PERSONS MAKING SUCH CHANGES. THE CONTRACTOR SHALL CHECK AND VERIFY ALL PLAN DIMENSIONS AND CONDITIONS BEFORE PROCEEDING WITH CONSTRUCTION.

32 NORTH PEAK STREET
BLOCK 35, LOTS 8 & 9

SITUATED IN
BOROUGH OF HIGHLANDS
MONMOUTH COUNTY, NEW JERSEY

GROTTO ENGINEERING ASSOCIATES, LLC
ENGINEERS · PLANNERS · SURVEYORS
Certificate of Authorization No. 24GA27918300
77 BRANT AVENUE - SUITE 105
CLARK, NEW JERSEY 07066
908-272-8901 (F) 908-272-8902

FRANK W. FARRELL
PROFESSIONAL ENGINEER
NEW JERSEY LICENSE NO. GE51556

DATE: 04–05–2024	SCALE: 1"=10'	DRAWN: AJC	CHECKED: FWF	SHEET: 6 OF 8	JOB: PR–0290

G:\Grotto Projects\PR-0290 - 32 North Peak St, Highlands (Charles Forkosh)\DOT PLAN\PR-0290 - 32 North Peak St, Highlands (Charles Forkosh) - 8.22.24.dwg 8/22/2024

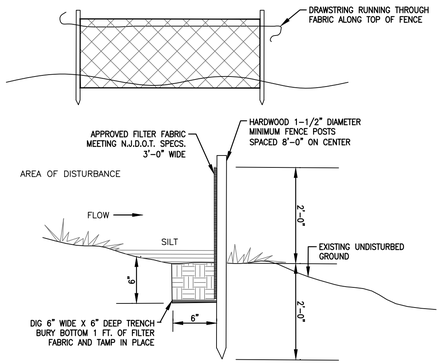

1. PLACE SILT FENCE AT LOCATIONS SHOWN ON THE SOIL EROSION PLAN.

2. THE SLOPE OF LAND FOR AT LEAST 30 FEET ADJACENT TO ANY SILT FENCE SHALL NOT EXCEED 5%.

3. SILT FENCE SHALL BE INSTALLED SO THAT WATER CAN NOT BYPASS THE FENCE AROUND IT'S ENDS.

4. INSPECTION SHALL BE FREQUENT AND REPAIR OR REPLACEMENT SHALL BE MADE PROMPTLY AS POSSIBLE.

5. SILT FENCE SHALL REMAIN IN PLACE FOR THE DURATION OF THE PROJECT UNLESS OTHERWISE DIRECTED BY THE TOWNSHIP ENGINEER.

SILT FENCE
N.T.S.

Probing Wire Test- 15.5 ga steel wire (survey flag)

Note: soil should be moist but not saturated. Do not test when soil is excessively dry or subject to freezing temperatures. Slow, steady downward pressure used to advance the wire.

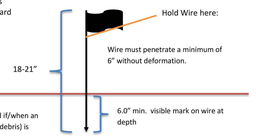

Handheld Soil Penetrometer Test

Note: soil should be moist but not saturated. Do not test when soil is excessively dry or subject to freezing temperatures. Slow, steady downward pressure used to advance the probe. Probe must penetrate at least 6" with less than 300 psi reading on the gage.

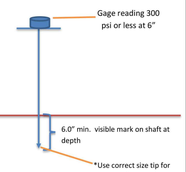

SIMPLIFIED COMPACTION TESTING METHODS

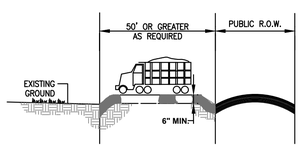

TEMPORARY STABILIZED CONSTRUCTION ENTRANCE
N.T.S.

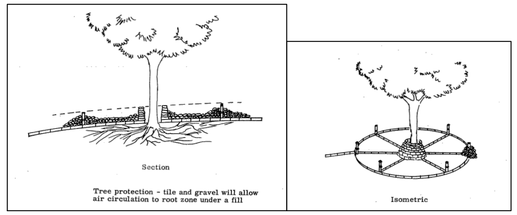

Figure 9-3: Root Protection During Construction Guide

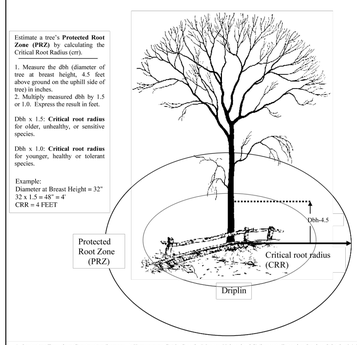

1. *Protecting Trees from Construction Damage- A Homeowners Guide,* Gary R. Johnson, University Of Minnesota Extension Service, Saint Paul, MN, 1999.

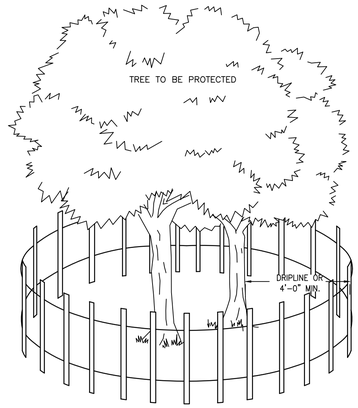

1. TREE PROTECTION SHALL BE PROVIDED FOR ANY AND ALL TREES TO BE PROTECTED DURING AND AFTER CONSTRUCTION.

2. 4 FOOT HIGH SNOW FENCE SHALL BE PLACED AT THE DRIP LINE OF THE TREE AND ENCIRCLE THE ENTIRE TREE.

3. BOARDS SHALL NOT BE NAILED TO TREES DURING CONSTRUCTION.

4. ROOTS SHALL NOT BE CUT IN AN AREA INSIDE THE DRIP LINE OF THE BRANCHES.

5. DAMAGED TRUNKS OR ROOTS WILL BE PAINTED IMMEDIATELY WITH A GOOD GRADE OF TREE PAINT.

6. TREE LIMB REMOVAL, WHERE NECESSARY, WILL BE DONE FLUSH WITH TRUNK OR MAIN LIMB. PAINT IMMEDIATELY WITH A GOOD GRADE OF TREE PAINT AND BE PERFORMED UNDER THE SUPERVISION OF A LICENSED NURSERYMAN.

TREE PROTECTION DETAIL
N.T.S.

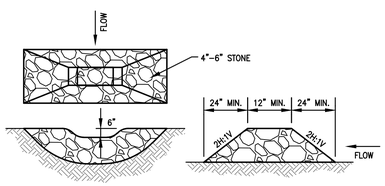

STONE CHECK DAM
N.T.S.

SEEDING SCHEDULE

1. TEMPORARY SEEDING SHALL CONSIST OF SPRING OATS APPLIED AT A RATE OF 2.0 LBS. PER 1,000 SF, OR PERENNIAL RYEGRASS APPLIED AT A RATE OF 1.0 LB PER 1,000 SF. TEMPORARY SEEDING TO BE MAINTAINED UNTIL DISTURBED AREAS ARE PERMANENTLY STABILIZED WITH PERMANENT SEEDING. IF ANY SERIOUS EROSION PROBLEMS OCCUR, THE ERODED AREAS SHALL BE REPAIRED AND STABILIZED WITH A MULCH AS INDICATED IN NOTE NO. 6. THE OPTIMUM SEEDING DATE IS MARCH 1 THROUGH MAY 15 AND AUGUST 15 THROUGH OCTOBER 1 FOR PERENNIAL RYE AND SPRING OATS.

2. PERMANENT SEEDING SHALL CONSIST OF THE FOLLOWING MIXTURE OR APPROVED EQUAL. OPTIMAL PLANTING DATE IS AUGUST 15 THROUGH OCTOBER 15. THE ACCEPTABLE PLANTING DATE IS MARCH 1 THROUGH APRIL 30.

WELL TO MODERATELY WELL DRAINED LOTS (MIXTURE #14):

TALL FESCUE	@	6.0 LBS/1,000 SF
KENTUCKY BLUEGRASS (BLEND	@	0.5 LBS/1,000 SF
PERENNIAL RYEGRASS (BLEND)	@	0.5 LBS/1,000 SF

3. FERTILIZER FOR THE ESTABLISHMENT OF TEMPORARY VEGETATIVE COVER SHALL BE 10-20-10 APPLIED AT A RATE OF 11 LBS PER 1,000 SF OR AS DETERMINED BY SOIL TESTS. FERTILIZER FOR THE ESTABLISHMENT OF PERMANENT VEGETATIVE COVER SHALL BE 10-10-10 APPLIED AT A RATE OF 11 LBS PER 1,000 SF OR AS DETERMINED BY SOIL TESTS. LIMESTONE FOR TEMPORARY AND PERMANENT SEEDING SHALL BE APPLIED AT A RATE OF 90 LBS PER 1,000 SF.

4. MULCHING IS REQUIRED ON ALL SEEDING. SEE MULCHING NOTES, THIS SHEET.

5. IF SEASON PREVENTS THE ESTABLISHMENT OF TEMPORARY OR PERMANENT SEEDING, EXPOSED AREAS TO BE STABILIZED WITH MULCH AS INDICATED IN NOTE NO. 6.

6. MULCH TO CONSIST OF SMALL GRAIN STRAW OR SALT HAY ANCHORED WITH A WOOD AND FIBER MULCH BINDER OR AN APPROVED EQUAL. MULCH WILL BE SPREAD AT A RATE OF 90 TO 115 LBS PER 1,000 SF AND ANCHORED WITH A MULCH ANCHORING TOOL OR LIQUID MULCH BINDER.

7. WORK LIME AND FERTILIZER INTO THE SOIL AS NEARLY AS PRACTICAL TO A DEPTH OF 4 INCHES WITH A DISC, SPRING-TOOTHED HARROW, OR OTHER SUITABLE EQUIPMENT. THE FINAL HARROWING OR DISCING OPERATION SHOULD BE ON THE GENERAL CONTOUR. CONTINUE TILLAGE UNTIL A REASONABLY UNIFORM, FINE SEEDBED IS PREPARED. ALL BUT CLAY OR SILTY SOILS AND COARSE SANDS SHOULD BE ROLLED TO FIRM THE SEEDBED WHEREVER FEASIBLE.

8. REMOVE FROM THE SURFACE ALL STONES TWO NICHES OR LARGER IN ANY DIMENSION. REMOVE ALL OTHER DEBRIS SUCH AS WIRE, CABLE, TREE ROOTS, PIECES OF CONCRETE, CLODS, LUMPS OR OTHER UNSUITABLE MATERIALS.

9. INSPECT SEEDBED JUST BEFORE SEEDING. IF TRAFFIC HAS LEFT THE SOIL COMPACTED, THE AREA MUST BE RE-TILLED AND FIRMED AS ABOVE.

SOIL DECOMPACTION AND TESTING REQUIREMENTS

SOIL COMPACTION TESTING REQUIREMENTS

1. SUBGRADE SOILS PRIOR TO THE APPLICATION OF TOPSOIL (SEE PERMANENT SEEDING AND STABILIZATION NOTES FOR TOPSOIL REQUIREMENTS) SHALL BE FREE OF EXCESSIVE COMPACTION TO A DEPTH OF 6.0 INCHES TO ENHANCE THE ESTABLISHMENT OF PERMANENT VEGETATIVE COVER.

2. AREAS OF THE SITE WHICH ARE SUBJECT TO COMPACTION TESTING AND/OR MITIGATION ARE GRAPHICALLY DENOTED ON THE CERTIFIED SOIL EROSION CONTROL PLAN.

3. COMPACTION TESTING LOCATIONS ARE DENOTED ON THE PLAN. A COPY OF THE PLAN OR PORTION OF THE PLAN SHALL BE USED TO MARK LOCATIONS OF TESTS, AND ATTACHED TO THE COMPACTION REMEDIATION FORM, AVAILABLE FROM THE LOCAL SOIL CONSERVATION DISTRICT. THIS FORM MUST BE FILLED OUT AND SUBMITTED PRIOR TO RECEIVING A CERTIFICATE OF COMPLIANCE FROM THE DISTRICT.

4. IN THE EVENT THAT TESTING INDICATES COMPACTION IN EXCESS OF THE MAXIMUM THRESHOLDS INDICATED FOR THE SIMPLIFIED TESTING METHODS (SEE DETAILS BELOW), THE CONTRACTOR/OWNER SHALL HAVE THE OPTION TO PERFORM EITHER (1) COMPACTION MITIGATION OVER THE ENTIRE MITIGATION AREA DENOTED ON THE PLAN (EXCLUDING EXEMPT AREAS), OR (2) PERFORM ADDITIONAL, MORE DETAILED TESTING TO ESTABLISH THE LIMITS OF EXCESSIVE COMPACTION WHEREUPON ONLY THE EXCESSIVELY COMPACTED AREAS WOULD REQUIRE COMPACTION MITIGATION. ADDITIONAL DETAILED TESTING SHALL BE PERFORMED BY A TRAINED, LICENSED PROFESSIONAL.

COMPACTION TESTING METHODS

A. PROBING WIRE TEST (SEE DETAIL)
B. HAND-HELD PENETROMETER TEST (SEE DETAIL)
C. TUBE BULK DENSITY TEST (LICENSED PROFESSIONAL ENGINEER REQUIRED)
D. NUCLEAR DENSITY TEST (LICENSED PROFESSIONAL ENGINEER REQUIRED)

NOTE: ADDITIONAL TESTING METHODS WHICH CONFORM TO ASTM STANDARDS AND SPECIFICATIONS, AND WHICH PRODUCE A DRY WEIGHT, SOIL BULK DENSITY MEASUREMENT MAY BE ALLOWED SUBJECT TO DISTRICT APPROVAL.

SOIL COMPACTION TESTING IS NOT REQUIRED IF/WHEN SUBSOIL COMPACTION REMEDIATION (SCARIFICATION/TILLAGE (6" MINIMUM DEPTH) OR SIMILAR) IS PROPOSED AS PART OF THE SEQUENCE OF CONSTRUCTION.

PROCEDURES FOR SOIL COMPACTION MITIGATION

PROCEDURES SHALL BE USED TO MITIGATE EXCESSIVE SOIL COMPACTION PRIOR TO PLACEMENT OF TOPSOIL AND ESTABLISHMENT OF PERMANENT VEGETATIVE COVER.

RESTORATION OF COMPACTED SOILS SHALL BE THROUGH DEEP SCARIFICATION/TILLAGE (6" MINIMUM DEPTH) WHERE THERE IS NO DANGER TO UNDERGROUND UTILITIES (CABLES, IRRIGATION SYSTEMS, ETC.). IN THE ALTERNATIVE, ANOTHER METHOD AS SPECIFIED BY A NEW JERSEY LICENSED PROFESSIONAL ENGINEER MAYBE SUBSTITUTED SUBJECT TO DISTRICT APPROVAL.

SLOPE STABILIZATION NOTES

1. GRADE SLOPES AS PER PLAN.

2. APPLY FERTILIZER AT A RATE OF APPROXIMATELY 500 POUNDS PER ACRE (10-10-10 OR EQUAL).

3. WORK FERTILIZER INTO SOIL TO A DEPTH OF 4 INCHES.

4. APPLY SEED ACCORDING TO SEEDING SCHEDULE ON THIS SHEET.

5. AFTER SEEDING, FIRM SOIL WITH CORRUGATED ROLLER TO ASSURE GOOD SEEDING-SOIL CONTACT.

6. MULCH AND STABILIZE AS PER MULCHING AND TACKING SPECIFICATIONS ON THIS SHEET.

7. STEEP SLOPES TO BE STABILIZED WITH JUTE MATTING (3:1 OR STEEPER).

CONSTRUCTION SCHEDULE

1. CLEAR PROPOSED ENTRANCE AND PLACE STABILIZED CONSTRUCTION ENTRANCE PAD AS NOTED	3 DAYS
2. INSTALL SEDIMENT CONTROL STRUCTURES (I.E. HAY BALES AND/OR SILT FENCE) ADJACENT TO THE LIMIT OF SOIL DISTURBANCE AS SHOWN.	2 DAYS
3. DEMOLISH EXISTING STRUCTURES	1 WEEK
4. CLEAR LAND AREAS TO BE DEVELOPED. TREES SHALL REMAIN WHEREVER POSSIBLE.	1 WEEK
5. ROUGH GRADE THE SITE.	2 WEEKS
6. CONSTRUCT STORM SEWERS AND DETENTION SYSTEM.	1 WEEK
7. INSTALL SEDIMENT CONTROL MEASURES AROUND INLETS.	1 DAY
8. BEGIN BUILDING CONSTRUCTION AND CURBING.	4 DAYS
9. BEGIN FINE GRADING.	3 DAYS
10. STABILIZE ALL AREAS NOT SUBJECT TO CONSTRUCTION TRAFFIC THAT SHALL REMAIN EXPOSED FOR MORE THAN 30 DAYS.	1 DAY
11. CONSTRUCT LIGHTING AND REMAINING UNDERGROUND UTILITIES.	1 WEEK
12. CONSTRUCT DRIVEWAY AND PARKING LOT PAVEMENT.	1 WEEK
13. FINISH BUILDING CONSTRUCTION.	6 MONTHS
14. INSTALL LANDSCAPING.	1 WEEK
15. STABILIZE ALL DISTURBED AREAS IN ACCORDANCE WITH APPLICABLE TEMPORARY OR PERMANENT SEEDING SPECIFICATIONS.	1 WEEK
16. REMOVE SEDIMENT AROUND SILT FENCES AND/OR HAY BALES.	1 WEEK
17. WHEN AREA IS STABILIZED, SEDIMENT CONTROL STRUCTURES CAN BE REMOVED.	2 DAYS

MULCHING NOTES

1. GRADING SHALL BE PERFORMED AS PER STANDARDS FOR LAND GRADING IN THE "STANDARDS FOR SOIL EROSION AND SEDIMENT CONTROL IN NEW JERSEY", SECTION 19.1.

2. PERMANENT SEED SHALL BE APPLIED AS PER STANDARD OF THIS SHEET.

3. STRAW OR HAY MULCHING IS REQUIRED ON ALL SEEDING AND SHALL CONSIST OF THE FOLLOWING: UNROTTED SMALL GRAIN STRAW, HAY FREE OF SEEDS, TO BE APPLIED AT THE RATE OF 1-1/2 TO 2 TONS PER ACRE (70 TO 90 POUNDS PER 1,000 SQUARE FEET).

4. SPREAD MULCH UNIFORMLY BY HAND OR MECHANICALLY SO THAT APPROXIMATELY 85% OF THE SOIL SURFACE IS COVERED.

5. LIQUID MULCH BINDER (TACKIFIER) SHALL BE APPLIED IN ACCORDANCE WITH THE MANUFACTURER'S RECOMMENDATIONS.

DUST CONTROL NOTES

ANY OF THE FOLLOWING METHODS SHALL BE USED FOR DUST CONTROL:

1. MULCHES: SEE STABILIZATION SPECIFICATION.

2. TILLAGE: TO ROUGHEN THE SURFACE AND BRING CLODS TO THE SURFACE. THIS IS A TEMPORARY EMERGENCY MEASURE WHICH SHOULD BE USED BEFORE SOIL BLOWING STARTS. BEGIN PLOWING ON WINDWARD SIDE OF SITE. CHISEL-TYPE PLOWS SPACED APPROXIMATELY 12" APART, AND SPRING-TOOTHED HARROWS ARE EXAMPLES OF EQUIPMENT WHICH MAY PRODUCE THE DESIRED EFFECT.

3. SPRINKLING: SITE IS SPRINKLED UNTIL THE SURFACE IS WET.

4. BARRIERS: BALES OF HAY AND/OR SILT FENCE CAN BE USED TO CONTROL AIR CURRENTS AND SOIL BLOWING.

VEGETATIVE COVER MAINTENANCE NOTES

1. MAINTENANCE SHOULD OCCUR ON A REGULAR BASIS, CONSISTENT WITH FAVORABLE PLANT GROWTH, SOIL AND CLIMATIC CONDITIONS. THIS INVOLVES REGULAR SEASONAL WORK FOR MOWING, FERTILIZING, LIMING, WATER, PRUNING, FIRE CONTROL, WEED AND PEST CONTROL, RE-SEEDING AND TIMELY REPAIRS.

2. MOWING ON IMPROVED AREAS, SUCH AS LAWNS, CERTAIN RECREATION FIELDS AND PICNIC AREAS SHALL BE FREQUENT. ON SEMI-IMPROVED AREAS, MOWING WILL BE INFREQUENT. UNIMPROVED AREAS MAY BE LEFT UNMOWED TO PERMIT NATURAL SUCCESSION.

3. FERTILIZER SHOULD BE APPLIED AS NEEDED TO MAINTAIN A DENSE STAND OR DESIRABLE SPECIES. FREQUENTLY MOWED AREAS AND THOSE AREAS ON SANDY SOILS WILL REQUIRE MORE FERTILIZATION.

4. LIME REQUIREMENT SHOULD BE DETERMINED BY SOIL TESTING TO BE DONE EVERY 2 OR 3 YEARS. FERTILIZATION WILL INCREASE THE NEED FOR LIMING.

5. WEED INVASION MAY RESULT FROM ABUSIVE MOWING AND INADEQUATE FERTILIZATION AND LIMING. BRUSH INVASION IS A COMMON CONSEQUENCE OF LACK OF MOWING. CONTROL OF WEEDS OR BRUSH SHALL BE ACCOMPLISHED BY USING HERBICIDES OR MECHANICAL METHODS.

6. THE PROPERTY OWNER OR TENANT BY CONTRACT SHALL BE RESPONSIBLE FOR MAINTENANCE DURING AND AFTER CONSTRUCTION.

SOIL EROSION NOTES

FREEHOLD SOIL CONSERVATION DISTRICT

1. THE FREEHOLD SOIL CONSERVATION DISTRICT SHALL BE NOTIFIED FORTY-EIGHT (48) HOURS IN ADVANCE OF ANY SOIL DISTURBING ACTIVITY.

2. ALL SOIL EROSION AND SEDIMENT CONTROL PRACTICES ARE TO BE INSTALLED PRIOR TO SOIL DISTURBANCE, OR IN THEIR PROPER SEQUENCE, AND MAINTAINED UNTIL PERMANENT PROTECTION IS ESTABLISHED.

3. ANY CHANGES TO THE CERTIFIED SOIL EROSION AND SEDIMENT CONTROL PLANS WILL REQUIRE THE SUBMISSION OF REVISED SOIL EROSION AND SEDIMENT CONTROL PLANS TO THE DISTRICT FOR RE-CERTIFICATION. THE REVISED PLANS MUST MEET ALL CURRENT STATE SOIL EROSION AND SEDIMENT CONTROL STANDARDS.

4. N.J.S.A. 4:24-39 et. SEQ. REQUIRES THAT NO CERTIFICATES OF OCCUPANCY BE ISSUED BEFORE THE DISTRICT DETERMINES THAT A PROJECT OR PORTION THEREOF IS IN FULL COMPLIANCE WITH THE CERTIFIED PLAN AND STANDARDS FOR SOIL EROSION AND SEDIMENT CONTROL IN NEW JERSEY AND A REPORT OF COMPLIANCE HAS BEEN ISSUED. UPON WRITTEN REQUEST FROM THE APPLICANT, THE DISTRICT MAY ISSUE A REPORT OF COMPLIANCE WITH CONDITIONS ON A LOT-BY-LOT OR SECTION-BY-SECTION BASIS, PROVIDED THAT THE PROJECT OR PORTION THEREOF IS IN SATISFACTORY COMPLIANCE WITH THE SEQUENCE OF DEVELOPMENT AND TEMPORARY MEASURES FOR SOIL EROSION AND SEDIMENT CONTROL HAVE BEEN IMPLEMENTED, INCLUDING PROVISIONS FOR STABILIZATION AND SITE WORK.

5. ANY DISTURBED AREAS THAT WILL BE LEFT EXPOSED MORE THAN SIXTY (60) DAYS, AND NOT SUBJECT TO CONSTRUCTION TRAFFIC, WILL IMMEDIATELY RECEIVE A TEMPORARY SEEDING. IF THE SEASON PREVENTS THE ESTABLISHMENT OF TEMPORARY COVER, THE DISTURBED AREAS WILL BE MULCHED WITH STRAW, OR EQUIVALENT MATERIAL, AT A RATE OF 2 TO 2 1/2 TONS PER ACRE, ACCORDING TO STATE STANDARD FOR STABILIZATION WITH MULCH ONLY.

6. IMMEDIATELY FOLLOWING INITIAL DISTURBANCE OR ROUGH GRADING, ALL CRITICAL AREAS SUBJECT TO EROSION (i.e. SOIL STOCKPILES, STEEP SLOPES AND ROADWAY EMBANKMENTS) WILL RECEIVE TEMPORARY SEEDING IN COMBINATION WITH STRAW MULCH OR A SUITABLE EQUIVALENT, AND A MULCH ANCHOR, IN ACCORDANCE WITH STATE STANDARDS.

7. A SUB-BASE COURSE WILL BE APPLIED IMMEDIATELY FOLLOWING ROUGH GRADING AND INSTALLATION OF IMPROVEMENTS TO STABILIZE STREETS, ROADS, DRIVEWAYS, AND PARKING AREAS. IN AREAS WHERE NO UTILITIES ARE PRESENT, THE SUB-BASE SHALL BE INSTALLED WITHIN FIFTEEN (15) DAYS OF THE PRELIMINARY GRADING.

8. THE STANDARD FOR STABILIZED CONSTRUCTION ACCESS REQUIRES THE INSTALLATION OF A PAD OF CLEAN CRUSHED STONE AT POINTS WHERE TRAFFIC WILL BE ACCESSING THE CONSTRUCTION SITE. AFTER INTERIOR ROADWAYS ARE PAVED, INDIVIDUAL LOTS REQUIRE A STABILIZED CONSTRUCTION ACCESS CONSISTING OF ONE INCH TO TWO INCH (1" - 2") STONE FOR A MINIMUM LENGTH OF TEN FEET (10') EQUAL TO THE LOT ENTRANCE WIDTH. ALL OTHER ACCESS POINTS SHALL BE BLOCKED OFF.

9. ALL SOIL WASHED, DROPPED, SPILLED, OR TRACKED OUTSIDE THE LIMIT OF DISTURBANCE OR ONTO PUBLIC RIGHTS-OF-WAY WILL BE REMOVED IMMEDIATELY.

10. PERMANENT VEGETATION IS TO BE SEEDED OR SODDED ON ALL EXPOSED AREAS WITHIN TEN (10) DAYS AFTER FINAL GRADING.

11. AT THE TIME THAT SITE PREPARATION FOR PERMANENT VEGETATIVE STABILIZATION IS GOING TO BE ACCOMPLISHED, ANY SOIL THAT WILL NOT PROVIDE A SUITABLE ENVIRONMENT TO SUPPORT ADEQUATE VEGETATIVE GROUND COVER SHALL BE REMOVED OR TREATED IN SUCH A WAY THAT IT WILL PERMANENTLY ADJUST THE SOIL CONDITIONS AND RENDER IT SUITABLE FOR VEGETATIVE GROUND COVER. IF THE REMOVAL OR TREATMENT OF THE SOIL WILL NOT PROVIDE SUITABLE CONDITIONS, NON-VEGETATIVE MEANS OF PERMANENT GROUND STABILIZATION WILL HAVE TO BE EMPLOYED.

12. IN ACCORDANCE WITH THE STANDARD FOR MANAGEMENT OF HIGH ACID PRODUCING SOILS, ANY SOIL HAVING A pH OF 4 OR LESS OR CONTAINING IRON SULFIDES SHALL BE ULTIMATELY PLACED OR BURIED WITH LIMESTONE APPLIED AT THE RATE OF 10 TONS/ACRE, (OR 450 LBS/1,000 SQ. FT OF SURFACE AREA) AND COVERED WITH A MINIMUM OF 12" OF SETTLED SOIL WITH A pH OF 5 OR MORE, OR 24" WHERE TREES OR SHRUBS ARE TO BE PLANTED.

13. CONDUIT OUTLET PROTECTION MUST BE INSTALLED AT ALL REQUIRED OUTFALLS PRIOR TO THE DRAINAGE SYSTEM BECOMING OPERATIONAL.

14. UNFILTERED DEWATERING IS NOT PERMITTED. NECESSARY PRECAUTIONS MUST BE TAKEN DURING ALL DEWATERING OPERATIONS TO MINIMIZE SEDIMENT TRANSFER. ANY DEWATERING METHODS USED MUST BE IN ACCORDANCE WITH THE STANDARD FOR DEWATERING.

15. SHOULD THE CONTROL OF DUST AT THE SITE BE NECESSARY, THE SITE WILL BE SPRINKLED UNTIL THE SURFACE IS WET, TEMPORARY VEGETATIVE COVER SHALL BE ESTABLISHED OR MULCH SHALL BE APPLIED AS REQUIRED BY THE STANDARD FOR DUST CONTROL.

16. STOCKPILE AND STAGING LOCATIONS ESTABLISHED IN THE FIELD SHALL BE PLACED WITHIN THE LIMIT OF DISTURBANCE ACCORDING TO THE CERTIFIED PLAN. STAGING AND STOCKPILES NOT LOCATED WITHIN THE LIMIT OF DISTURBANCE WILL REQUIRE CERTIFICATION OF A REVISED SOIL EROSION AND SEDIMENT CONTROL PLAN. CERTIFICATION OF A NEW SOIL EROSION AND SEDIMENT CONTROL PLAN MAY BE REQUIRED FOR THESE ACTIVITIES IF AN AREA GREATER THAN 5,000 SQUARE FEET IS DISTURBED.

17. ALL SOIL STOCKPILES ARE TO BE TEMPORARILY STABILIZED WITH SOIL EROSION AND SEDIMENT CONTROL NOTE #6.

18. THE PROPERTY OWNER SHALL BE RESPONSIBLE FOR ANY EROSION OR SEDIMENTATION THAT MAY OCCUR BELOW STORMWATER OUTFALLS OR OFFSITE AS A RESULT OF CONSTRUCTION OF THE PROJECT.

GENERAL SOIL EROSION NOTES:

1. STOCKPILES ARE NOT TO BE LOCATED WITHIN 50 FEET OF A FLOOD PLAIN, SLOPE, ROADWAY, OR DRAINAGE FACILITY, THE BASE OF ALL STOCKPILES SHALL BE PROTECTED BY A HAY BALE BARRIER OR SEDIMENT CONTROL FENCE.

2. THE SITE SHALL AT ALL TIMES, BE GRADED AND MAINTAINED SUCH THAT ALL STORMWATER RUNOFF IS DIVERTED TO SOIL EROSION AND SEDIMENT CONTROL FACILITIES.

3. ALL SEDIMENTATION STRUCTURES SHALL BE INSPECTED AND MAINTAINED ON A REGULAR BASIS.

4. THE SOIL CONSERVATION DISTRICT MAY REQUEST ADDITIONAL MEASURES TO MINIMIZE ON-SITE OR OFF-SITE SOIL EROSION PROBLEMS DURING CONSTRUCTION.

5. ANY CONVEYANCE OF THIS PROJECT OR PORTION THEREOF PRIOR TO ITS COMPLETION WILL TRANSFER FULL RESPONSIBILITY FOR COMPLIANCE WITH THE CERTIFIED PLAN TO ANY SUBSEQUENT OWNER.

6. THE CONTRACTOR SHALL MAINTAIN PERMANENT SOIL EROSION AND SEDIMENT CONTROL MEASURES DURING CONSTRUCTION. THE OWNER SHALL MAINTAIN SAID MEASURES THEREAFTER.

7. THE SOIL EROSION AND SEDIMENT CONTROL PLAN IS TO BE USED FOR SOIL EROSION AND SEDIMENT CONTROL PURPOSES ONLY.

SOIL EROSION AND SEDIMENT CONTROL NOTES AND DETAILS

REVISIONS	
DATE	DESCRIPTION
08-22-2024	REPLACED SANITARY SEWER WITH SEPTIC SYSTEM
08-07-2024	REVISED FOR BOROUGH AND FSCD SUBMISSION
04-25-2024	ISSUED FOR SUBMISSION

THE OWNER AND CONTRACTOR SHALL HOLD HARMLESS THE ENGINEER FROM AND AGAINST ALL CLAIMS, DAMAGES, LOSSES AND EXPENSES INCLUDING ATTORNEY'S FEES ARISING OUT OF OR RESULTING FROM THE PERFORMANCE OF THE WORK BY THE CONTRACTOR. CHANGES TO THE PLANS BY THE OWNER AND THE CONTRACTOR SHALL BE THE RESPONSIBILITY OF THE PERSONS MAKING SUCH CHANGES. THE CONTRACTOR SHALL CHECK AND VERIFY ALL PLAN DIMENSIONS AND CONDITIONS BEFORE PROCEEDING WITH CONSTRUCTION.

32 NORTH PEAK STREET
BLOCK 35, LOTS 8 & 9

SITUATED IN
BOROUGH OF HIGHLANDS
MONMOUTH COUNTY, NEW JERSEY

GROTTO ENGINEERING ASSOCIATES, LLC
ENGINEERS • PLANNERS • SURVEYORS
Certificate of Authorization No. 24GA27918300
77 BRANT AVENUE - SUITE 105
CLARK, NEW JERSEY 07066
908-272-8901 (F) 908-272-8902

FRANK W. FARRELL
PROFESSIONAL ENGINEER
NEW JERSEY LICENSE NO. GE51556

DATE: 04-05-2024	SCALE: N.T.S.	DRAWN: AJC	CHECKED: FWF	SHEET: 7 OF 8	JOB: PR-0290

G:\Grotto Projects\PR-0290 - 32 North Peak St., Highlands (Charlie Farlow)\PLOT PLAN\PR-0290 - 32 North Peak St., Highlands (Charlie Farlow) - 8.22.24.dwg 8/22/2024

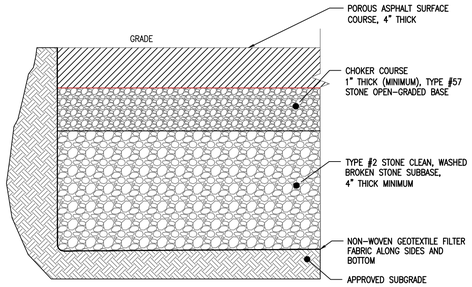

NOTES:
1. PERMEABLE PAVEMENT AND CONCRETE MUST BE IN ACCORDANCE WITH NJ STORMWATER BEST MANAGEMENT PRACTICES MANUAL, CHAPTER 9.6
2. FILTER FABRIC IS REQUIRED ALONG THE SIDES AND BOTTOM OF THE SYSTEM TO PREVENT MITIGATION OF FINES FROM THE SURROUNDING SOIL.
3. THE STORAGE BED IN THIS TYPE OF SYSTEM CONSISTS OF AN AGGREGATE LAYER THAT COLLECTS RUNOFF AND INFILTRATES IT INTO THE EXISTING SUBSOILS.
4. THE SEASONAL HIGH WATER TABLE (SHWT) OR BEDROCK MUST BE AT LEAST 1 FOOT BELOW THE BOTTOM OF THE STORAGE BED.
5. THE MINIMUM CHOKER COURSE THICKNESS IS 1 INCH.
6. STORAGE BED AGGREGATE MUST BE CLEAN, WASHED AND OPEN-GRADED AASHTO NO. 2 BROKEN STONE.
7. POST-CONSTRUCTION TESTING OF THE PERMEABLE PAVEMENT SURFACE COURSE IS REQUIRED AND MUST CONFORM TO THE METHODS OF ASTM C1781: STANDARD TEST METHOD FOR SURFACE INFILTRATION RATE OF PERMEABLE PAVEMENT SYSTEMS.
8. PERMEABLE PAVEMENT MAY ACCEPT ADDITIONAL INFLOW FROM A MAXIMUM AREA OF 3 TIMES THE AREA OF THE PERMEABLE PAVEMENT SYSTEM.

PERMEABLE PAVEMENT/POROUS ASPHALT DETAIL
N.T.S.

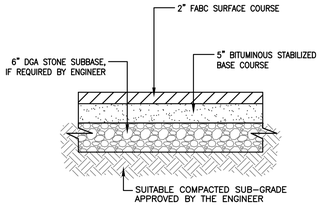

NOTES:
1. PAVEMENT SPECIFICATION MAY BE ALTERED AT THE DISCRETION OF THE MUNICIPAL ENGINEER AS REQUIRED BY SITE CONDITIONS.
2. HOT MIX ASPHALT SHALL BE SAWCUT WHERE NEW PAVEMENT MEETS EXISTING.
3. ALL CONSTRUCTION SHALL BE IN ACCORDANCE WITH THE N.J.D.O.T. STANDARD SPECIFICATIONS FOR ROAD AND BRIDGE CONSTRUCTION, 2019, AS AMENDED.

TYPICAL H.M.A PAVEMENT DETAIL
N.T.S.

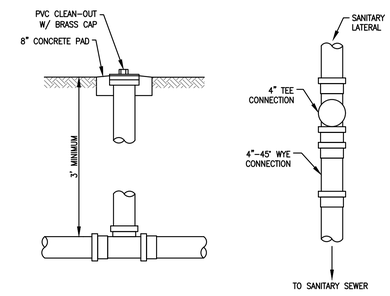

SANITARY CLEANOUT DETAIL
N.T.S.

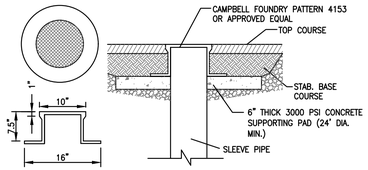

CLEAN-OUT CASTING DETAIL
N.T.S.

NOTES:
1. ALL PIPING TO BE 4" PVC UNLESS OTHERWISE NOTED (SEE PLANS)
2. TEE-WYE MAY BE SUBMITTED FOR COMBINATION WYE WITH 45° BEND

ALTERNATE CONNECTION (WHERE APPROVED BY ENG)

SANITARY HOUSE LATERAL TO SEPTIC SYSTEM
N.T.S.

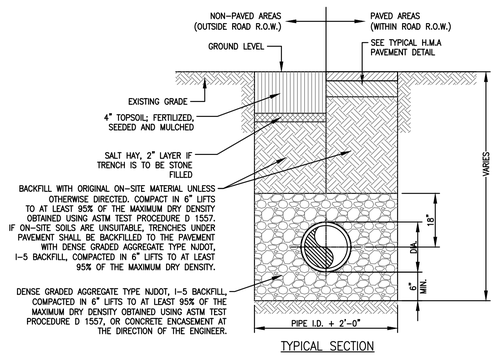

TYPICAL SECTION

NOTES:
1. RECYCLED CONCRETE IS NOT TO BE USED AS BACKFILL.
2. COMPACTED BACKFILL TO BE FREE OF EXCESSIVE CLAY, ORGANIC MATTER AND BOULDERS.

PVC SANITARY SEWER TRENCH DETAIL
N.T.S.

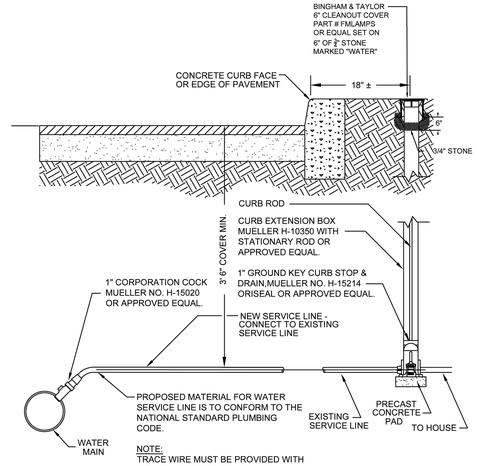

NOTE:
TRACE WIRE MUST BE PROVIDED WITH NON-CONDUCTIVE PIPING.

TYPICAL WATER SERVICE CONNECTION DETAIL
N.T.S.

CONSTRUCTION DETAILS - 1

REVISIONS	
DATE	DESCRIPTION
08-22-2024	REPLACED SANITARY SEWER WITH SEPTIC SYSTEM
08-07-2024	REVISED FOR BOROUGH AND FSCD SUBMISSION
04-25-2024	ISSUED FOR SUBMISSION

THE OWNER AND CONTRACTOR SHALL HOLD HARMLESS THE ENGINEER FROM AND AGAINST ALL CLAIMS, DAMAGES, LOSSES AND EXPENSES INCLUDING ATTORNEY'S FEES ARISING OUT OF OR RESULTING FROM THE PERFORMANCE OF THE WORK BY THE CONTRACTOR. CHANGES TO THE PLANS BY THE OWNER AND THE CONTRACTOR SHALL BE THE RESPONSIBILITY OF THE PERSONS MAKING SUCH CHANGES. THE CONTRACTOR SHALL CHECK AND VERIFY ALL PLAN DIMENSIONS AND CONDITIONS BEFORE PROCEEDING WITH CONSTRUCTION.

32 NORTH PEAK STREET
BLOCK 35, LOTS 8 & 9

SITUATED IN
BOROUGH OF HIGHLANDS
MONMOUTH COUNTY, NEW JERSEY

GROTTO ENGINEERING ASSOCIATES, LLC
ENGINEERS · PLANNERS · SURVEYORS
Certificate of Authorization No. 24GA27918300
77 BRANT AVENUE - SUITE 105
CLARK, NEW JERSEY 07066
908-272-8901 (F) 908-272-8902

FRANK W. FARRELL
PROFESSIONAL ENGINEER
NEW JERSEY LICENSE NO. GE51556

DATE: 04-05-2024	SCALE:	DRAWN: AJC	CHECKED: FWF	SHEET: 8 OF 8	JOB: PR-0290

G:\Grotto Projects\PR-0290 - 32 North Peak St., Highlands (Charles Farkas)\PLOT PLAN\PR-0290 - 32 North Peak St., Highlands (Charles Farkas) - 8.22.24.dwg 8/27/2024

DRAINAGE REPORT

For

32 NORTH PEAK STREET

BLOCK 35, LOTS 8 & 9

BOROUGH OF HIGHLANDS

MONMOUTH COUNTY, NEW JERSEY

GROTTO ENGINEERING ASSOCIATES

Richard O'Connor, P.E., P.P., C.M.E
77 Brant Avenue – Suite 105
Clark, New Jersey 07066

Frank W. Farrell, P.E., C.M.E.
New Jersey Professional Engineer, License No. GE51556
August 22, 2024

INTRODUCTION

This report provides a description of the impacts to the existing drainage system due to the site improvements being proposed for the subject project known as 32 North Peak Street.

The "project" consists of 13,423 sf or 0.31 acres of land located in the Borough of Highlands, Monmouth County, New Jersey, and will be identified as Block 35, Lots 8 & 9 or 32 North Peak Street.

The existing Lots 8 & 9 are developed with various impervious surfaces. The total lot areas equate to 13,423 sf or 0.31 acres. The topography of the Lots slope south and east towards Valley Avenue. The proposed site improvements consist of two new residential dwellings with driveways and retaining walls, resulting in a reduction in impervious surface and grade across the site. Additionally, the proposed driveways have been designed as gravel surfaces, filtering surface runoff and increasing groundwater recharge.

A "major development", as defined in the ordinance, is any development that provides for ultimately disturbing one or more acres of land or increasing the impervious coverage by an area greater than one-quarter acre. Since the total disturbance is less than 1 acre and there is no increase in impervious area, the requirements of the stormwater management provisions do not apply.

The maximum discharge and total volume of runoff for Pre and Post development conditions have been calculated and provided herein. Volumes and rates have been controlled so that after development, the site will generate no greater peak runoff from the site than prior to development for the 2-, 10-, and 100-year storms considered individually. The design of the detention system has been based on the maximum storage volumes generated by the various storms described above.

EXISTING SITE

At the time of the survey, Lots 8 & 9 contained a 1-1/2 story dwelling, various retaining walls, patios, walkways, and other impervious surfaces totaling 5,603 sf (41.7%). The area of the Lots is approximately 13,423 sf or 0.31 acres. Based on various sources of aerial imagery, this analysis conservatively considers approximately 1,979 sf (14.7%) of the site to be "wooded". No stormwater management existed on site at the time of the survey.

The lot consists of one soil type as shown on the NRCS Soil Survey. The following information will provide a synopsis of the sites' soil characteristics.

The entirety of the tract for each respective lot is made up of Phalanx loamy sand with 10 to 25 percent slopes (PhbE), hydrologic soil group A. The Phalanx series consists of mildly sloping, well drained soils. A typical profile consists of 0-17 inches of loamy sand, followed by 0-21 inches of sandy loam, and then 0-22 inches of very flaggy loamy sand. Permeability is high to very high, with a rate of 2.00 to 20.00 in/hr. The depth to the water table is estimated to be between 48 inches (4') and 118 inches (9.8') below the ground surface.

On Lots 8 & 9, the tract slopes from west to east towards Valley Avenue. The approximate elevations of the project area range from 150' from the north corner of Lot 9 to 116' at the south of Lot 8.

Table 1: Pre-Development Drainage Area (Both Lots)

Drainage Area	Area (SF)	Area (Acres)	%	Tc (MIN)
Uncontrolled Area				
Grass (A), CN = 39	5,811.3	0.133	43.3	10
Woods (A), CN = 30	1,979.0	0.045	14.7	10
Impervious (Roof) CN = 98	1,071.9	0.025	8.0	10
Impervious (Other) CN = 98	4,563.8	0.105	34.0	10
TOTAL	**13,426.0**	**0.308**	**100**	

PROPOSED DRAINAGE IMPROVEMENTS

Two 2-story residential structures, driveways, and appurtenances are to be constructed on Lots 8 & 9 for a total of 4,913 sf. of impervious surface (36.6%). The proposed improvements and site grading will reduce the pre-development impervious area therefore reducing runoff. Additionally, roof runoff from both proposed structures will be piped directly into two underground stormwater basins, reducing the overall quantity of runoff from the property by at least 50% (see Table 4 below).

The two proposed driveways will constructed of gravel, filtering surface runoff and increasing groundwater recharge. Should the subsurface stone beds become fully saturated or experience runoff rates which exceed the permeability of the gravel area, the additional runoff from upstream and from the front yards will be directed to a depression between both driveways. This depression then drains to a swale between the two dwellings. Two stone check dams are proposed along the center of the swale at the top and bottom of the slope. This will dissipate the energy of the runoff.

Although the gravel driveway is considered pervious surface, and gravel driveways are explicitly excluded from the Borough's Lot, Coverage definition, this office has conservatively chosen to perform the runoff calculations as though the driveway were "impervious".

The remaining areas shall mimic existing drainage patterns and will continue to flow towards Valley Avenue. The redevelopment of this site will not substantially alter the drainage pattern in the area. No adverse impacts to neighboring or downstream properties are anticipated. The observations made herein are based on land survey data, various sources of aerial imagery, and Monmouth county topographic information. Datum of various sources has been considered and adjusted as necessary.

Table 2: Post Development Drainage Area

Drainage Area	Area (SF)	Area (Acres)	%	Tc (MIN)
Uncontrolled Area				
Grass (A), CN = 39	8,511.0	0.195	63.4	10
Impervious (Other) CN = 98	1,605.0	0.037	12.0	10
Controlled Areas				
Impervious (Roof Lot 8) CN = 98	2,032.0	0.047	15.1	10
Impervious (Roof Lot 9) CN = 98	1,276.0	0.029	9.5	10
TOTAL	**13,424**	**0.308**	**100**	

Table 3: Rainfall Depths for the 2-, 10-, and 100-Year Storms

Frequency of Storms	NOAA NWS PFDS Precipitation Depth (inches)
2-year	3.33
10-year	5.10
100-year	8.61

Table 4: Rainfall Peak Flows (Both Lots)

Frequency of Storms	Pre-Development Peak Flow (cfs)	Proposed Peak Flow (cfs)	Proposed Flow is Less Than Existing Flow?	Percent Reduced
2-year	0.285	0.094	✓	67
10-year	0.444	0.126	✓	71.6
100-year	0.877	0.400	✓	54.4

All stormwater runoff rates for various storm events will be reduced as a result of the proposed improvements on Lots 8 and 9. The amount of impervious area is being reduced and runoff will be further reduced by the construction of two underground stormwater management basins (Stormtech SC-740) with a length of approximately 78 linear feet and corresponding volume providing over 800 cubic feet of storage. The systems shall have open bottoms and be set on and encased in gravel to allow stormwater to infiltrate the ground. Pop-up emitter drains shall be installed at the ground surface above each basin to safely discharge any additional flow, which shall not occur during the 2- or 10-year storm events.
Publicly available soil reports document that the existing soils have an infiltration rate between 2 in/hr and 20 in/hr; 2 in/hr was used in the exfiltration calculations.

STORMWATER QUALITY

As per the New Jersey Department of Environmental Protection (NJDEP), an increase of one quarter (1/4) of an acre (or 10,890 sf.) of impervious surface, an increase of one quarter (1/4) of an acre (or 10,890 sf.) of regulated motor vehicle surface, or one (1) acre of disturbance would signify a major development and require that stormwater runoff quality be assessed. Since the increase in impervious area is less than the threshold of one-quarter acre (10,890 sf.), the water quality requirements of the stormwater management provisions do not apply.

Regulated motor vehicle surface will decrease in the post-development condition by 1,047 sf from 1,847 sf to 800 sf; this will be an improvement to stormwater runoff quality.

Additionally, the proposed driveways have been designed as gravel, which is not considered to be an impervious surface and provides some water quality benefit.

SOIL STABILITY

The site has been designed with provisions for safe and efficient control of stormwater runoff in a manner which will not adversely affect the existing drainage patterns found in the downstream areas. The proposed discharge locations follow similar paths as pre-development runoff. The runoff is not directed to any nearby outfalls, as none exists in proximity to the site. Runoff is conveyed downstream where it becomes part of the general runoff associated with the wider area. Furthermore, no concentrated runoff is directed to the sloped portions of the site. The retaining walls shall be engineered so that surface runoff drains safely behind the walls and discharges through drainpipes or weep holes. Groundwater mounding shall be accounted for in the design. The proposed improvements will have no significant effect on flooding at or downstream of the site. No known erosion issues exist downstream. The proposed improvements will reduce the impervious area and slopes of the site when compared to pre-development conditions, reducing runoff quantity. A depression between both proposed driveways collects runoff from upstream and the front yard, directing it to a swale between the two dwellings. Two stone check dams are proposed along the center of the swale at the top and bottom of the slope to dissipate the energy of the runoff, reducing surface runoff velocities. Based on the information shown herein and on the attached Soil Erosion and Sediment Control Plan, soil stability will be improved. Refer to Figure 21-1, provided below.

CONCLUSIONS

The reduced impervious area in Block 35 Lots 8 & 9 coupled with the construction of the proposed Stormtech chambers and gravel driveways will improve stormwater characteristics of the properties. The proposed improvements and site grading will reduce runoff from the site relative to the predevelopment condition by over 50%. No additional stormwater runoff will be discharged to neighboring properties or the adjoining roadways, therefore, no adverse impacts to neighboring or downstream properties are anticipated.

Figure 21–1
Point Discharge and Downstream Stability Analysis Procedure

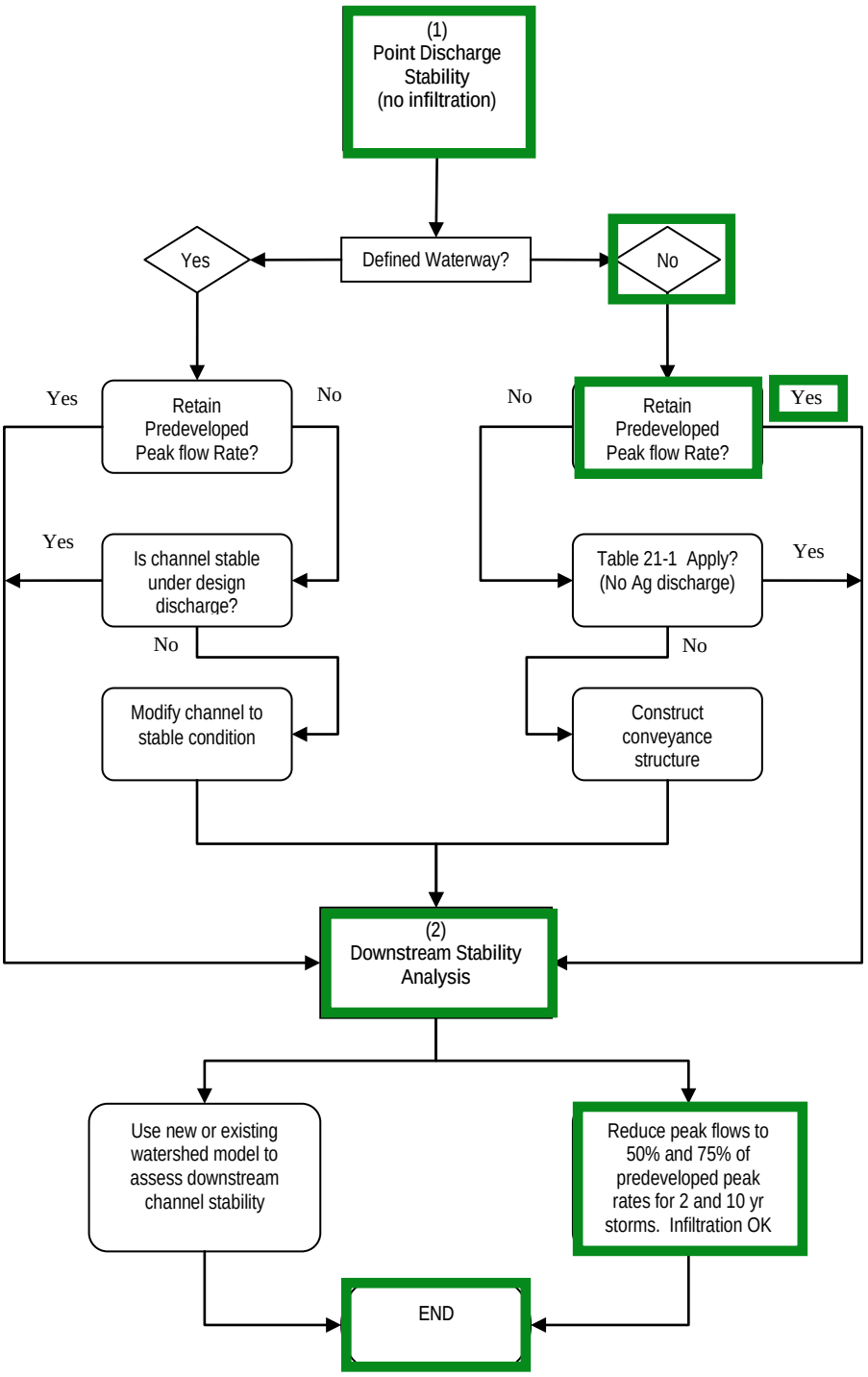

Hydrograph Summary Report

Hydraflow Hydrographs Extension for Autodesk® Civil 3D® by Autodesk, Inc. v2024

Hyd. No.	Hydrograph type (origin)	Peak flow (cfs)	Time interval (min)	Time to Peak (min)	Hyd. volume (cuft)	Inflow hyd(s)	Maximum elevation (ft)	Total strge used (cuft)	Hydrograph Description
1	SCS Runoff	0.056	6	1452	44	------	------	------	Existing - Grass (A)
2	SCS Runoff	0.052	6	1452	42	------	------	------	Existing - Woods (A)
3	SCS Runoff	0.055	6	732	395	------	------	------	Existing - Impervious (Roof)
4	SCS Runoff	0.230	6	732	1,659	------	------	------	Existing - Impervious (Other)
5	Combine	0.285	6	732	2,139	1, 2, 3, 4	------	------	Exisiting Conditions
7	SCS Runoff	0.082	6	1452	64	------	------	------	Post Dev Uncontrolled - Grass (A)
8	SCS Runoff	0.081	6	732	585	------	------	------	Post Dev Uncontrolled - Imp (Other)
9	Combine	0.094	6	1452	648	7, 8	------	------	Post Development - Uncontrolled Are
11	SCS Runoff	0.103	6	732	743	------	------	------	Post Dev Controlled - Imp (Roof 1)
12	Reservoir	0.000	6	n/a	0	11	128.09	160	Underground Chamber 1
14	SCS Runoff	0.064	6	732	458	------	------	------	Post Dev Controlled - Imp (Roof 2)
15	Reservoir	0.000	6	n/a	0	14	128.22	103	Underground Chamber 2
17	Combine	0.094	6	1452	648	9, 12, 15,	------	------	Total Discharge

Hydrograph Report

Hyd. No. 1

Existing - Grass (A)

Hydrograph type	= SCS Runoff	Peak discharge	= 0.056 cfs
Storm frequency	= 2 yrs	Time to peak	= 24.20 hrs
Time interval	= 6 min	Hyd. volume	= 44 cuft
Drainage area	= 0.133 ac	Curve number	= 39.000
Basin Slope	= 0.0 %	Hydraulic length	= 0 ft
Tc method	= User	Time of conc. (Tc)	= 10.0 min
Total precip.	= 3.33 in	Distribution	= Custom
Storm duration	= G:\Users\A Castelli\DUSH\Type II Distribution.cds	Shape factor	= 484

Hydrograph Discharge Table

(Printed values >= 1.00% of Qp. Print interval = 6)

Time (hrs)	Outflow (cfs)
24.10	0.032

...End

Hydrograph Report

Hyd. No. 2

Existing - Woods (A)

Hydrograph type	= SCS Runoff	Peak discharge	= 0.052 cfs
Storm frequency	= 2 yrs	Time to peak	= 24.20 hrs
Time interval	= 6 min	Hyd. volume	= 42 cuft
Drainage area	= 0.045 ac	Curve number	= 30.000
Basin Slope	= 0.0 %	Hydraulic length	= 0 ft
Tc method	= User	Time of conc. (Tc)	= 10.0 min
Total precip.	= 3.33 in	Distribution	= Custom
Storm duration	= G:\Users\A Castelli\DUSH\Type II Distribution.cds	Shape factor	= 484

Hydrograph Discharge Table

(Printed values >= 1.00% of Qp. Print interval = 6)

Time (hrs)	Outflow (cfs)
24.10	0.028

...End

Hydrograph Report

Hyd. No. 3

Existing - Impervious (Roof)

Hydrograph type	= SCS Runoff	Peak discharge	= 0.055 cfs
Storm frequency	= 2 yrs	Time to peak	= 12.20 hrs
Time interval	= 6 min	Hyd. volume	= 395 cuft
Drainage area	= 0.025 ac	Curve number	= 98.000
Basin Slope	= 0.0 %	Hydraulic length	= 0 ft
Tc method	= User	Time of conc. (Tc)	= 10.0 min
Total precip.	= 3.33 in	Distribution	= Custom
Storm duration	= G:\Users\A Castelli\DUSH\Type 2 Distribution.cds	Shape factor	= 484

Hydrograph Discharge Table

(Printed values >= 1.00% of Qp. Print interval = 6)

Time (hrs)	Outflow (cfs)	Time (hrs)	Outflow (cfs)	Time (hrs)	Outflow (cfs)	Time (hrs)	Outflow (cfs)
3.20	0.001	14.00	0.004	24.80	0.009	35.60	0.001
3.80	0.001	14.60	0.003	25.40	0.005	36.20	0.001
4.40	0.001	15.20	0.002	26.00	0.004	36.80	0.001
5.00	0.001	15.80	0.002	26.60	0.003	37.40	0.001
5.60	0.001	16.40	0.002	27.20	0.002	38.00	0.001
6.20	0.001	17.00	0.002	27.80	0.002	38.60	0.001
6.80	0.001	17.60	0.002	28.40	0.002	39.20	0.001
7.40	0.002	18.20	0.001	29.00	0.002	39.80	0.001
8.00	0.002	18.80	0.001	29.60	0.001	40.40	0.001
8.60	0.002	19.40	0.001	30.20	0.001	41.00	0.001
9.20	0.002	20.00	0.001	30.80	0.001	41.60	0.001
9.80	0.003	20.60	0.001	31.40	0.001	42.20	0.001
10.40	0.004	21.20	0.001	32.00	0.001		
11.00	0.006	21.80	0.001	32.60	0.001	*...End*	
11.60	0.011	22.40	0.001	33.20	0.001		
12.20	0.055	23.00	0.001	33.80	0.001		
12.80	0.010	23.60	0.001	34.40	0.001		
13.40	0.006	24.20	0.008	35.00	0.001		

Hydrograph Report

Hyd. No. 4

Existing - Impervious (Other)

Hydrograph type	= SCS Runoff	Peak discharge	= 0.230 cfs
Storm frequency	= 2 yrs	Time to peak	= 12.20 hrs
Time interval	= 6 min	Hyd. volume	= 1,659 cuft
Drainage area	= 0.105 ac	Curve number	= 98.000
Basin Slope	= 0.0 %	Hydraulic length	= 0 ft
Tc method	= User	Time of conc. (Tc)	= 10.0 min
Total precip.	= 3.33 in	Distribution	= Custom
Storm duration	= G:\Users\A Castelli\DUSH\Type 2 Distribution.cds	Shape factor	= 484

Hydrograph Discharge Table

(Printed values >= 1.00% of Qp. Print interval = 6)

Time (hrs)	Outflow (cfs)	Time (hrs)	Outflow (cfs)	Time (hrs)	Outflow (cfs)	Time (hrs)	Outflow (cfs)
3.20	0.002	14.00	0.017	24.80	0.036	35.60	0.003
3.80	0.003	14.60	0.013	25.40	0.021	36.20	0.003
4.40	0.003	15.20	0.010	26.00	0.016	36.80	0.003
5.00	0.004	15.80	0.009	26.60	0.012	37.40	0.003
5.60	0.004	16.40	0.008	27.20	0.009	38.00	0.003
6.20	0.005	17.00	0.008	27.80	0.008	38.60	0.003
6.80	0.006	17.60	0.007	28.40	0.008	39.20	0.003
7.40	0.007	18.20	0.006	29.00	0.007	39.80	0.003
8.00	0.007	18.80	0.006	29.60	0.006	40.40	0.003
8.60	0.008	19.40	0.005	30.20	0.005	41.00	0.002
9.20	0.010	20.00	0.005	30.80	0.005	41.60	0.002
9.80	0.013	20.60	0.005	31.40	0.005	42.20	0.002
10.40	0.016	21.20	0.005	32.00	0.004		
11.00	0.024	21.80	0.004	32.60	0.004	*...End*	
11.60	0.044	22.40	0.004	33.20	0.004		
12.20	0.230	23.00	0.004	33.80	0.004		
12.80	0.044	23.60	0.004	34.40	0.004		
13.40	0.024	24.20	0.034	35.00	0.003		

Hydrograph Report

Hyd. No. 5

Exisiting Conditions

Hydrograph type	= Combine	Peak discharge	= 0.285 cfs
Storm frequency	= 2 yrs	Time to peak	= 12.20 hrs
Time interval	= 6 min	Hyd. volume	= 2,139 cuft
Inflow hyds.	= 1, 2, 3, 4	Contrib. drain. area	= 0.308 ac

Hydrograph Discharge Table

(Printed values >= 1.00% of Qp. Print interval = 6)

Time (hrs)	Hyd. 1 + (cfs)	Hyd. 2 + (cfs)	Hyd. 3 + (cfs)	Hyd. 4 = (cfs)	Outflow (cfs)
3.60	0.000	0.000	0.001	0.003	0.003
4.20	0.000	0.000	0.001	0.003	0.004
4.80	0.000	0.000	0.001	0.004	0.005
5.40	0.000	0.000	0.001	0.004	0.005
6.00	0.000	0.000	0.001	0.004	0.006
6.60	0.000	0.000	0.001	0.005	0.007
7.20	0.000	0.000	0.001	0.006	0.008
7.80	0.000	0.000	0.002	0.007	0.009
8.40	0.000	0.000	0.002	0.008	0.010
9.00	0.000	0.000	0.002	0.009	0.011
9.60	0.000	0.000	0.003	0.012	0.014
10.20	0.000	0.000	0.004	0.015	0.018
10.80	0.000	0.000	0.005	0.020	0.025
11.40	0.000	0.000	0.008	0.035	0.044
12.00	0.000	0.000	0.028	0.118	0.147
12.60	0.000	0.000	0.014	0.061	0.075
13.20	0.000	0.000	0.007	0.029	0.036
13.80	0.000	0.000	0.004	0.018	0.022
14.40	0.000	0.000	0.003	0.014	0.018
15.00	0.000	0.000	0.003	0.011	0.014
15.60	0.000	0.000	0.002	0.010	0.012

Continues on next page...

Hydrograph Discharge Table

Time (hrs)	Hyd. 1 + (cfs)	Hyd. 2 + (cfs)	Hyd. 3 + (cfs)	Hyd. 4 = (cfs)	Outflow (cfs)
16.20	0.000	0.000	0.002	0.009	0.011
16.80	0.000	0.000	0.002	0.008	0.010
17.40	0.000	0.000	0.002	0.007	0.009
18.00	0.000	0.000	0.001	0.006	0.008
18.60	0.000	0.000	0.001	0.006	0.007
19.20	0.000	0.000	0.001	0.005	0.007
19.80	0.000	0.000	0.001	0.005	0.006
20.40	0.000	0.000	0.001	0.005	0.006
21.00	0.000	0.000	0.001	0.005	0.006
21.60	0.000	0.000	0.001	0.005	0.006
22.20	0.000	0.000	0.001	0.004	0.005
22.80	0.000	0.000	0.001	0.004	0.005
23.40	0.000	0.000	0.001	0.004	0.005
24.00	0.000	0.000	0.001	0.004	0.005
24.60	0.000	0.000	0.012	0.049	0.061
25.20	0.000	0.000	0.006	0.025	0.031
25.80	0.000	0.000	0.004	0.018	0.022
26.40	0.000	0.000	0.003	0.013	0.016
27.00	0.000	0.000	0.002	0.010	0.013
27.60	0.000	0.000	0.002	0.009	0.011
28.20	0.000	0.000	0.002	0.008	0.010
28.80	0.000	0.000	0.002	0.007	0.009
29.40	0.000	0.000	0.001	0.006	0.008
30.00	0.000	0.000	0.001	0.005	0.007
30.60	0.000	0.000	0.001	0.005	0.006
31.20	0.000	0.000	0.001	0.005	0.006
31.80	0.000	0.000	0.001	0.005	0.006

Continues on next page...

Hydrograph Discharge Table

Time (hrs)	Hyd. 1 + (cfs)	Hyd. 2 + (cfs)	Hyd. 3 + (cfs)	Hyd. 4 = (cfs)	Outflow (cfs)
32.40	0.000	0.000	0.001	0.004	0.005
33.00	0.000	0.000	0.001	0.004	0.005
33.60	0.000	0.000	0.001	0.004	0.005
34.20	0.000	0.000	0.001	0.004	0.005
34.80	0.000	0.000	0.001	0.003	0.004
35.40	0.000	0.000	0.001	0.003	0.004
36.00	0.000	0.000	0.001	0.003	0.004
36.60	0.000	0.000	0.001	0.003	0.004
37.20	0.000	0.000	0.001	0.003	0.003
37.80	0.000	0.000	0.001	0.003	0.003
38.40	0.000	0.000	0.001	0.003	0.003
39.00	0.000	0.000	0.001	0.003	0.003
39.60	0.000	0.000	0.001	0.003	0.003
40.20	0.000	0.000	0.001	0.003	0.003
40.80	0.000	0.000	0.001	0.002	0.003
41.40	0.000	0.000	0.001	0.002	0.003
42.00	0.000	0.000	0.001	0.002	0.003
42.60	0.000	0.000	0.001	0.002	0.003

...End

Hydrograph Report

Hyd. No. 7

Post Dev Uncontrolled - Grass (A)

Hydrograph type	= SCS Runoff	Peak discharge	= 0.082 cfs
Storm frequency	= 2 yrs	Time to peak	= 24.20 hrs
Time interval	= 6 min	Hyd. volume	= 64 cuft
Drainage area	= 0.195 ac	Curve number	= 39.000
Basin Slope	= 0.0 %	Hydraulic length	= 0 ft
Tc method	= User	Time of conc. (Tc)	= 10.0 min
Total precip.	= 3.33 in	Distribution	= Custom
Storm duration	= G:\Users\A Castelli\DUSH\Type 2 Distribution.cds	Shape factor	= 484

Hydrograph Discharge Table

(Printed values >= 1.00% of Qp. Print interval = 6)

Time (hrs)	Outflow (cfs)
24.10	0.047

...End

Hydrograph Report

Hyd. No. 8

Post Dev Uncontrolled - Imp (Other)

Hydrograph type	= SCS Runoff	Peak discharge	= 0.081 cfs
Storm frequency	= 2 yrs	Time to peak	= 12.20 hrs
Time interval	= 6 min	Hyd. volume	= 585 cuft
Drainage area	= 0.037 ac	Curve number	= 98.000
Basin Slope	= 0.0 %	Hydraulic length	= 0 ft
Tc method	= User	Time of conc. (Tc)	= 10.0 min
Total precip.	= 3.33 in	Distribution	= Custom
Storm duration	= G:\Users\A Castelli\DUSH\Type 2 Distribution.cds	Shape factor	= 484

Hydrograph Discharge Table

(Printed values >= 1.00% of Qp. Print interval = 6)

Time (hrs)	Outflow (cfs)	Time (hrs)	Outflow (cfs)	Time (hrs)	Outflow (cfs)	Time (hrs)	Outflow (cfs)
3.20	0.001	14.00	0.006	24.80	0.013	35.60	0.001
3.80	0.001	14.60	0.005	25.40	0.007	36.20	0.001
4.40	0.001	15.20	0.004	26.00	0.006	36.80	0.001
5.00	0.001	15.80	0.003	26.60	0.004	37.40	0.001
5.60	0.001	16.40	0.003	27.20	0.003	38.00	0.001
6.20	0.002	17.00	0.003	27.80	0.003	38.60	0.001
6.80	0.002	17.60	0.002	28.40	0.003	39.20	0.001
7.40	0.002	18.20	0.002	29.00	0.002	39.80	0.001
8.00	0.003	18.80	0.002	29.60	0.002	40.40	0.001
8.60	0.003	19.40	0.002	30.20	0.002	41.00	0.001
9.20	0.003	20.00	0.002	30.80	0.002	41.60	0.001
9.80	0.004	20.60	0.002	31.40	0.002	42.20	0.001
10.40	0.006	21.20	0.002	32.00	0.002		
11.00	0.008	21.80	0.002	32.60	0.001	*...End*	
11.60	0.016	22.40	0.001	33.20	0.001		
12.20	0.081	23.00	0.001	33.80	0.001		
12.80	0.015	23.60	0.001	34.40	0.001		
13.40	0.009	24.20	0.012	35.00	0.001		

Hydrograph Report

Hyd. No. 9

Post Development - Uncontrolled Area

Hydrograph type	= Combine	Peak discharge	= 0.094 cfs
Storm frequency	= 2 yrs	Time to peak	= 24.20 hrs
Time interval	= 6 min	Hyd. volume	= 648 cuft
Inflow hyds.	= 7, 8	Contrib. drain. area	= 0.232 ac

Hydrograph Discharge Table

(Printed values >= 1.00% of Qp. Print interval = 6)

Time (hrs)	Hyd. 7 + (cfs)	Hyd. 8 = (cfs)	Outflow (cfs)
3.60	0.000	0.001	0.001
4.20	0.000	0.001	0.001
4.80	0.000	0.001	0.001
5.40	0.000	0.001	0.001
6.00	0.000	0.002	0.002
6.60	0.000	0.002	0.002
7.20	0.000	0.002	0.002
7.80	0.000	0.003	0.003
8.40	0.000	0.003	0.003
9.00	0.000	0.003	0.003
9.60	0.000	0.004	0.004
10.20	0.000	0.005	0.005
10.80	0.000	0.007	0.007
11.40	0.000	0.012	0.012
12.00	0.000	0.042	0.042
12.60	0.000	0.021	0.021
13.20	0.000	0.010	0.010
13.80	0.000	0.006	0.006
14.40	0.000	0.005	0.005
15.00	0.000	0.004	0.004
15.60	0.000	0.003	0.003

Continues on next page...

Hydrograph Discharge Table

Time (hrs)	Hyd. 7 + (cfs)	Hyd. 8 = (cfs)	Outflow (cfs)
16.20	0.000	0.003	0.003
16.80	0.000	0.003	0.003
17.40	0.000	0.002	0.002
18.00	0.000	0.002	0.002
18.60	0.000	0.002	0.002
19.20	0.000	0.002	0.002
19.80	0.000	0.002	0.002
20.40	0.000	0.002	0.002
21.00	0.000	0.002	0.002
21.60	0.000	0.002	0.002
22.20	0.000	0.002	0.002
22.80	0.000	0.001	0.002
23.40	0.000	0.001	0.002
24.00	0.000	0.001	0.001
24.60	0.000	0.017	0.017
25.20	0.000	0.009	0.009
25.80	0.000	0.006	0.006
26.40	0.000	0.005	0.005
27.00	0.000	0.004	0.004
27.60	0.000	0.003	0.003
28.20	0.000	0.003	0.003
28.80	0.000	0.002	0.002
29.40	0.000	0.002	0.002
30.00	0.000	0.002	0.002
30.60	0.000	0.002	0.002
31.20	0.000	0.002	0.002
31.80	0.000	0.002	0.002

Continues on next page...

Hydrograph Discharge Table

Time (hrs)	Hyd. 7 + (cfs)	Hyd. 8 = (cfs)	Outflow (cfs)
32.40	0.000	0.002	0.002
33.00	0.000	0.001	0.001
33.60	0.000	0.001	0.001
34.20	0.000	0.001	0.001
34.80	0.000	0.001	0.001
35.40	0.000	0.001	0.001
36.00	0.000	0.001	0.001
36.60	0.000	0.001	0.001
37.20	0.000	0.001	0.001
37.80	0.000	0.001	0.001
38.40	0.000	0.001	0.001

...End

Hydrograph Report

Hyd. No. 11

Post Dev Controlled - Imp (Roof 1)

Hydrograph type	= SCS Runoff	Peak discharge	= 0.103 cfs
Storm frequency	= 2 yrs	Time to peak	= 12.20 hrs
Time interval	= 6 min	Hyd. volume	= 743 cuft
Drainage area	= 0.047 ac	Curve number	= 98.000
Basin Slope	= 0.0 %	Hydraulic length	= 0 ft
Tc method	= User	Time of conc. (Tc)	= 10.0 min
Total precip.	= 3.33 in	Distribution	= Custom
Storm duration	= G:\Users\A Castelli\DUH\Type 2 Distribution.cds	Shape factor	= 484

Hydrograph Discharge Table

(Printed values >= 1.00% of Qp. Print interval = 6)

Time (hrs)	Outflow (cfs)	Time (hrs)	Outflow (cfs)	Time (hrs)	Outflow (cfs)	Time (hrs)	Outflow (cfs)
3.20	0.001	14.00	0.007	24.80	0.016	35.60	0.001
3.80	0.001	14.60	0.006	25.40	0.009	36.20	0.001
4.40	0.002	15.20	0.005	26.00	0.007	36.80	0.001
5.00	0.002	15.80	0.004	26.60	0.005	37.40	0.001
5.60	0.002	16.40	0.004	27.20	0.004	38.00	0.001
6.20	0.002	17.00	0.003	27.80	0.004	38.60	0.001
6.80	0.002	17.60	0.003	28.40	0.003	39.20	0.001
7.40	0.003	18.20	0.003	29.00	0.003	39.80	0.001
8.00	0.003	18.80	0.002	29.60	0.003	40.40	0.001
8.60	0.004	19.40	0.002	30.20	0.002	41.00	0.001
9.20	0.004	20.00	0.002	30.80	0.002	41.60	0.001
9.80	0.006	20.60	0.002	31.40	0.002	42.20	0.001
10.40	0.007	21.20	0.002	32.00	0.002		
11.00	0.011	21.80	0.002	32.60	0.002	*...End*	
11.60	0.020	22.40	0.002	33.20	0.002		
12.20	0.103	23.00	0.002	33.80	0.002		
12.80	0.019	23.60	0.002	34.40	0.002		
13.40	0.011	24.20	0.015	35.00	0.001		

Hydrograph Report

Hyd. No. 12

Underground Chamber 1

Hydrograph type	= Reservoir	Peak discharge	= 0.000 cfs
Storm frequency	= 2 yrs	Time to peak	= n/a
Time interval	= 6 min	Hyd. volume	= 0 cuft
Inflow hyd. No.	= 11 - Post Dev Controlled Roof 1	Reservoir name	= Stormtech SC-740
Max. Elevation	= 128.09 ft	Max. Storage	= 160 cuft

Storage Indication method used. Exfiltration extracted from Outflow.

...End

Pond Report

Pond No. 1 - Stormtech SC-740 Left Roof

Pond Data

UG Chambers -Invert elev. = 127.50 ft, Rise x Span = 2.50 x 3.50 ft, Barrel Len = 50.00 ft, No. Barrels = 1, Slope = 0.00%, Headers = No
Encasement -Invert elev. = 127.00 ft, Width = 4.50 ft, Height = 3.50 ft, Voids = 40.00%

Stage / Storage Table

Stage (ft)	Elevation (ft)	Contour area (sqft)	Incr. Storage (cuft)	Total storage (cuft)
0.00	127.00	n/a	0	0
0.35	127.35	n/a	32	32
0.70	127.70	n/a	52	84
1.05	128.05	n/a	68	152
1.40	128.40	n/a	67	218
1.75	128.75	n/a	65	283
2.10	129.10	n/a	62	345
2.45	129.45	n/a	57	402
2.80	129.80	n/a	51	453
3.15	130.15	n/a	37	490
3.50	130.50	n/a	32	521

Culvert / Orifice Structures

	[A]	[B]	[C]	[PrfRsr]
Rise (in)	= 0.00	4.00	0.00	0.00
Span (in)	= 0.00	4.00	0.00	0.00
No. Barrels	= 0	2	0	0
Invert El. (ft)	= 0.00	130.10	0.00	0.00
Length (ft)	= 0.00	0.00	0.00	0.00
Slope (%)	= 0.00	0.00	0.00	n/a
N-Value	= .013	.013	.013	n/a
Orifice Coeff.	= 0.60	0.60	0.60	0.60
Multi-Stage	= n/a	No	No	No

Weir Structures

	[A]	[B]	[C]	[D]
Crest Len (ft)	= 0.00	0.00	0.00	0.00
Crest El. (ft)	= 0.00	0.00	0.00	0.00
Weir Coeff.	= 3.33	3.33	3.33	3.33
Weir Type	= ---	---	---	---
Multi-Stage	= No	No	No	No

Exfil.(in/hr) = 2.000 (by Wet area)
TW Elev. (ft) = 0.00

Note: Culvert/Orifice outflows are analyzed under inlet (ic) and outlet (oc) control. Weir risers checked for orifice conditions (ic) and submergence (s).

Stage / Storage / Discharge Table

Stage ft	Storage cuft	Elevation ft	Clv A cfs	Clv B cfs	Clv C cfs	PrfRsr cfs	Wr A cfs	Wr B cfs	Wr C cfs	Wr D cfs	Exfil cfs	User cfs	Total cfs
0.00	0	127.00	---	0.00	---	---	---	---	---	---	0.000	---	0.000
0.35	32	127.35	---	0.00	---	---	---	---	---	---	0.012	---	0.012
0.70	84	127.70	---	0.00	---	---	---	---	---	---	0.014	---	0.014
1.05	152	128.05	---	0.00	---	---	---	---	---	---	0.015	---	0.015
1.40	218	128.40	---	0.00	---	---	---	---	---	---	0.017	---	0.017
1.75	283	128.75	---	0.00	---	---	---	---	---	---	0.019	---	0.019
2.10	345	129.10	---	0.00	---	---	---	---	---	---	0.020	---	0.020
2.45	402	129.45	---	0.00	---	---	---	---	---	---	0.022	---	0.022
2.80	453	129.80	---	0.00	---	---	---	---	---	---	0.023	---	0.023
3.15	490	130.15	---	0.01 ic	---	---	---	---	---	---	0.025	---	0.038
3.50	521	130.50	---	0.41 ic	---	---	---	---	---	---	0.027	---	0.433

Hydrograph Report

Hyd. No. 14

Post Dev Controlled - Imp (Roof 2)

Hydrograph type	= SCS Runoff	Peak discharge	= 0.064 cfs
Storm frequency	= 2 yrs	Time to peak	= 12.20 hrs
Time interval	= 6 min	Hyd. volume	= 458 cuft
Drainage area	= 0.029 ac	Curve number	= 98.000
Basin Slope	= 0.0 %	Hydraulic length	= 0 ft
Tc method	= User	Time of conc. (Tc)	= 10.0 min
Total precip.	= 3.33 in	Distribution	= Custom
Storm duration	= G:\Users\A Castelli\DUSH\Type 2 Distribution.cds	Shape factor	= 484

Hydrograph Discharge Table

(Printed values >= 1.00% of Qp. Print interval = 6)

Time (hrs)	Outflow (cfs)	Time (hrs)	Outflow (cfs)	Time (hrs)	Outflow (cfs)	Time (hrs)	Outflow (cfs)
3.20	0.001	14.00	0.005	24.80	0.010	35.60	0.001
3.80	0.001	14.60	0.004	25.40	0.006	36.20	0.001
4.40	0.001	15.20	0.003	26.00	0.004	36.80	0.001
5.00	0.001	15.80	0.003	26.60	0.003	37.40	0.001
5.60	0.001	16.40	0.002	27.20	0.003	38.00	0.001
6.20	0.001	17.00	0.002	27.80	0.002	38.60	0.001
6.80	0.002	17.60	0.002	28.40	0.002	39.20	0.001
7.40	0.002	18.20	0.002	29.00	0.002	39.80	0.001
8.00	0.002	18.80	0.002	29.60	0.002	40.40	0.001
8.60	0.002	19.40	0.001	30.20	0.001	41.00	0.001
9.20	0.003	20.00	0.001	30.80	0.001	41.60	0.001
9.80	0.004	20.60	0.001	31.40	0.001	42.20	0.001
10.40	0.004	21.20	0.001	32.00	0.001		
11.00	0.007	21.80	0.001	32.60	0.001	*...End*	
11.60	0.012	22.40	0.001	33.20	0.001		
12.20	0.064	23.00	0.001	33.80	0.001		
12.80	0.012	23.60	0.001	34.40	0.001		
13.40	0.007	24.20	0.009	35.00	0.001		

Hydrograph Report

Hyd. No. 15

Underground Chamber 2

Hydrograph type	= Reservoir	Peak discharge	= 0.000 cfs
Storm frequency	= 2 yrs	Time to peak	= n/a
Time interval	= 6 min	Hyd. volume	= 0 cuft
Inflow hyd. No.	= 14 - Post Dev Controlled Runoff (Roof 2)	Reservoir name	= Stormtech SC-740
Max. Elevation	= 128.22 ft	Max. Storage	= 103 cuft

Storage Indication method used. Exfiltration extracted from Outflow.

...End

Pond Report

Pond No. 2 - Stormtech SC-740 Right Roof

Pond Data

UG Chambers -Invert elev. = 127.50 ft, Rise x Span = 2.50 x 3.50 ft, Barrel Len = 28.00 ft, No. Barrels = 1, Slope = 0.00%, Headers = No
Encasement -Invert elev. = 127.00 ft, Width = 4.50 ft, Height = 3.50 ft, Voids = 40.00%

Stage / Storage Table

Stage (ft)	Elevation (ft)	Contour area (sqft)	Incr. Storage (cuft)	Total storage (cuft)
0.00	127.00	n/a	0	0
0.35	127.35	n/a	18	18
0.70	127.70	n/a	29	47
1.05	128.05	n/a	38	85
1.40	128.40	n/a	37	122
1.75	128.75	n/a	36	159
2.10	129.10	n/a	35	193
2.45	129.45	n/a	32	225
2.80	129.80	n/a	28	254
3.15	130.15	n/a	21	274
3.50	130.50	n/a	18	292

Culvert / Orifice Structures

	[A]	[B]	[C]	[PrfRsr]
Rise (in)	= 0.00	4.00	0.00	0.00
Span (in)	= 0.00	4.00	0.00	0.00
No. Barrels	= 0	2	0	0
Invert El. (ft)	= 0.00	130.10	0.00	0.00
Length (ft)	= 0.00	0.00	0.00	0.00
Slope (%)	= 0.00	0.00	0.00	n/a
N-Value	= .013	.013	.013	n/a
Orifice Coeff.	= 0.60	0.60	0.60	0.60
Multi-Stage	= n/a	No	No	No

Weir Structures

	[A]	[B]	[C]	[D]
Crest Len (ft)	= 0.00	0.00	0.00	0.00
Crest El. (ft)	= 0.00	0.00	0.00	0.00
Weir Coeff.	= 3.33	3.33	3.33	3.33
Weir Type	= ---	---	---	---
Multi-Stage	= No	No	No	No

Exfil.(in/hr) = 2.000 (by Wet area)
TW Elev. (ft) = 0.00

Note: Culvert/Orifice outflows are analyzed under inlet (ic) and outlet (oc) control. Weir risers checked for orifice conditions (ic) and submergence (s).

Stage / Storage / Discharge Table

Stage ft	Storage cuft	Elevation ft	Clv A cfs	Clv B cfs	Clv C cfs	PrfRsr cfs	Wr A cfs	Wr B cfs	Wr C cfs	Wr D cfs	Exfil cfs	User cfs	Total cfs
0.00	0	127.00	---	0.00	---	---	---	---	---	---	0.000	---	0.000
0.35	18	127.35	---	0.00	---	---	---	---	---	---	0.007	---	0.007
0.70	47	127.70	---	0.00	---	---	---	---	---	---	0.008	---	0.008
1.05	85	128.05	---	0.00	---	---	---	---	---	---	0.009	---	0.009
1.40	122	128.40	---	0.00	---	---	---	---	---	---	0.009	---	0.009
1.75	159	128.75	---	0.00	---	---	---	---	---	---	0.010	---	0.010
2.10	193	129.10	---	0.00	---	---	---	---	---	---	0.011	---	0.011
2.45	225	129.45	---	0.00	---	---	---	---	---	---	0.012	---	0.012
2.80	254	129.80	---	0.00	---	---	---	---	---	---	0.013	---	0.013
3.15	274	130.15	---	0.01 ic	---	---	---	---	---	---	0.014	---	0.027
3.50	292	130.50	---	0.41 ic	---	---	---	---	---	---	0.015	---	0.421

Hydrograph Report

Hyd. No. 17

Total Discharge

Hydrograph type	= Combine	Peak discharge	= 0.094 cfs
Storm frequency	= 2 yrs	Time to peak	= 24.20 hrs
Time interval	= 6 min	Hyd. volume	= 648 cuft
Inflow hyds.	= 9, 12, 15	Contrib. drain. area	= 0.000 ac

Hydrograph Discharge Table

(Printed values >= 1.00% of Qp. Print interval = 6)

Time (hrs)	Hyd. 9 + (cfs)	Hyd. 12 + (cfs)	Hyd. 15 + (cfs)	Outflow (cfs)
3.60	0.001	0.000 <<	0.000 <<	0.001
4.20	0.001	0.000 <<	0.000 <<	0.001
4.80	0.001	0.000 <<	0.000 <<	0.001
5.40	0.001	0.000 <<	0.000	0.001
6.00	0.002	0.000 <<	0.000	0.002
6.60	0.002	0.000 <<	0.000 <<	0.002
7.20	0.002	0.000 <<	0.000 <<	0.002
7.80	0.003	0.000	0.000 <<	0.003
8.40	0.003	0.000 <<	0.000 <<	0.003
9.00	0.003	0.000 <<	0.000 <<	0.003
9.60	0.004	0.000	0.000	0.004
10.20	0.005	0.000 <<	0.000 <<	0.005
10.80	0.007	0.000 <<	0.000 <<	0.007
11.40	0.012	0.000 <<	0.000 <<	0.012
12.00	0.042	0.000 <<	0.000 <<	0.042
12.60	0.021	0.000 <<	0.000 <<	0.021
13.20	0.010	0.000 <<	0.000 <<	0.010
13.80	0.006	0.000 <<	0.000 <<	0.006
14.40	0.005	0.000 <<	0.000 <<	0.005
15.00	0.004	0.000 <<	0.000 <<	0.004
15.60	0.003	0.000 <<	0.000 <<	0.003

Continues on next page...

Hydrograph Discharge Table

Time (hrs)	Hyd. 9 + (cfs)	Hyd. 12 + (cfs)	Hyd. 15 + (cfs)	Outflow (cfs)
16.20	0.003	0.000 <<	0.000 <<	0.003
16.80	0.003	0.000 <<	0.000 <<	0.003
17.40	0.002	0.000 <<	0.000 <<	0.002
18.00	0.002	0.000 <<	0.000 <<	0.002
18.60	0.002	0.000 <<	0.000 <<	0.002
19.20	0.002	0.000 <<	0.000	0.002
19.80	0.002	0.000 <<	0.000 <<	0.002
20.40	0.002	0.000 <<	0.000 <<	0.002
21.00	0.002	0.000 <<	0.000 <<	0.002
21.60	0.002	0.000 <<	0.000 <<	0.002
22.20	0.002	0.000	0.000	0.002
22.80	0.002	0.000 <<	0.000	0.002
23.40	0.002	0.000	0.000 <<	0.002
24.00	0.001	0.000	0.000 <<	0.001
24.60	0.017	0.000 <<	0.000 <<	0.017
25.20	0.009	0.000 <<	0.000 <<	0.009
25.80	0.006	0.000 <<	0.000 <<	0.006
26.40	0.005	0.000 <<	0.000 <<	0.005
27.00	0.004	0.000 <<	0.000 <<	0.004
27.60	0.003	0.000 <<	0.000 <<	0.003
28.20	0.003	0.000 <<	0.000	0.003
28.80	0.002	0.000 <<	0.000 <<	0.002
29.40	0.002	0.000 <<	0.000 <<	0.002
30.00	0.002	0.000	0.000 <<	0.002
30.60	0.002	0.000 <<	0.000 <<	0.002
31.20	0.002	0.000 <<	0.000 <<	0.002
31.80	0.002	0.000 <<	0.000	0.002

Continues on next page...

Hydrograph Discharge Table

Time (hrs)	Hyd. 9 + (cfs)	Hyd. 12 + (cfs)	Hyd. 15 + (cfs)	Outflow (cfs)
32.40	0.002	0.000	0.000 <<	0.002
33.00	0.001	0.000	0.000 <<	0.001
33.60	0.001	0.000	0.000 <<	0.001
34.20	0.001	0.000	0.000 <<	0.001
34.80	0.001	0.000	0.000 <<	0.001
35.40	0.001	0.000 <<	0.000 <<	0.001
36.00	0.001	0.000	0.000 <<	0.001
36.60	0.001	0.000 <<	0.000 <<	0.001
37.20	0.001	0.000	0.000 <<	0.001
37.80	0.001	0.000 <<	0.000 <<	0.001
38.40	0.001	0.000	0.000 <<	0.001

...End

Hydrograph Summary Report

Hydraflow Hydrographs Extension for Autodesk® Civil 3D® by Autodesk, Inc. v2024

Hyd. No.	Hydrograph type (origin)	Peak flow (cfs)	Time interval (min)	Time to Peak (min)	Hyd. volume (cuft)	Inflow hyd(s)	Maximum elevation (ft)	Total strge used (cuft)	Hydrograph Description
1	SCS Runoff	0.005	6	780	209	------	------	------	Existing - Grass (A)
2	SCS Runoff	0.024	6	1452	20	------	------	------	Existing - Woods (A)
3	SCS Runoff	0.085	6	732	622	------	------	------	Existing - Impervious (Roof)
4	SCS Runoff	0.358	6	732	2,613	------	------	------	Existing - Impervious (Other)
5	Combine	0.444	6	732	3,464	1, 2, 3, 4	------	------	Exisiting Conditions
7	SCS Runoff	0.007	6	780	306	------	------	------	Post Dev Uncontrolled - Grass (A)
8	SCS Runoff	0.126	6	732	921	------	------	------	Post Dev Uncontrolled - Imp (Other)
9	Combine	0.126	6	732	1,227	7, 8	------	------	Post Development - Uncontrolled Are
11	SCS Runoff	0.160	6	732	1,170	------	------	------	Post Dev Controlled - Imp (Roof 1)
12	Reservoir	0.000	6	n/a	0	11	128.82	296	Underground Chamber 1
14	SCS Runoff	0.099	6	732	722	------	------	------	Post Dev Controlled - Imp (Roof 2)
15	Reservoir	0.000	6	n/a	0	14	129.05	189	Underground Chamber 2
17	Combine	0.126	6	732	1,227	9, 12, 15,	------	------	Total Discharge

Hydrograph Report

Hyd. No. 1

Existing - Grass (A)

Hydrograph type	= SCS Runoff	Peak discharge	= 0.005 cfs
Storm frequency	= 10 yrs	Time to peak	= 13.00 hrs
Time interval	= 6 min	Hyd. volume	= 209 cuft
Drainage area	= 0.133 ac	Curve number	= 39.000
Basin Slope	= 0.0 %	Hydraulic length	= 0 ft
Tc method	= User	Time of conc. (Tc)	= 10.0 min
Total precip.	= 5.15 in	Distribution	= Custom
Storm duration	= G:\Users\A Castelli\DUSH\Type II Distribution.cds	Shape factor	= 484

Hydrograph Discharge Table

(Printed values >= 1.00% of Qp. Print interval = 6)

Time (hrs)	Outflow (cfs)	Time (hrs)	Outflow (cfs)
12.30	0.001	23.10	0.002
12.90	0.005	23.70	0.002
13.50	0.004		
14.10	0.004	*...End*	
14.70	0.003		
15.30	0.003		
15.90	0.003		
16.50	0.003		
17.10	0.002		
17.70	0.002		
18.30	0.002		
18.90	0.002		
19.50	0.002		
20.10	0.002		
20.70	0.002		
21.30	0.002		
21.90	0.002		
22.50	0.002		

Hydrograph Report

Hyd. No. 2

Existing - Woods (A)

Hydrograph type	= SCS Runoff	Peak discharge	= 0.024 cfs
Storm frequency	= 10 yrs	Time to peak	= 24.20 hrs
Time interval	= 6 min	Hyd. volume	= 20 cuft
Drainage area	= 0.045 ac	Curve number	= 30.000
Basin Slope	= 0.0 %	Hydraulic length	= 0 ft
Tc method	= User	Time of conc. (Tc)	= 10.0 min
Total precip.	= 5.15 in	Distribution	= Custom
Storm duration	= G:\Users\A Castelli\DUSH\Type II Distribution.cds	Shape factor	= 484

Hydrograph Discharge Table

(Printed values >= 1.00% of Qp. Print interval = 6)

Time (hrs)	Outflow (cfs)
24.10	0.014

...End

Hydrograph Report

Hyd. No. 3

Existing - Impervious (Roof)

Hydrograph type	= SCS Runoff	Peak discharge	= 0.085 cfs
Storm frequency	= 10 yrs	Time to peak	= 12.20 hrs
Time interval	= 6 min	Hyd. volume	= 622 cuft
Drainage area	= 0.025 ac	Curve number	= 98.000
Basin Slope	= 0.0 %	Hydraulic length	= 0 ft
Tc method	= User	Time of conc. (Tc)	= 10.0 min
Total precip.	= 5.15 in	Distribution	= Custom
Storm duration	= G:\Users\A Castelli\DUSH\Type 2 Distribution.cds	Shape factor	= 484

Hydrograph Discharge Table

(Printed values >= 1.00% of Qp. Print interval = 6)

Time (hrs)	Outflow (cfs)	Time (hrs)	Outflow (cfs)	Time (hrs)	Outflow (cfs)	Time (hrs)	Outflow (cfs)
2.40	0.001	13.20	0.011	24.00	0.001	34.80	0.001
3.00	0.001	13.80	0.007	24.60	0.018	35.40	0.001
3.60	0.001	14.40	0.005	25.20	0.009	36.00	0.001
4.20	0.001	15.00	0.004	25.80	0.007	36.60	0.001
4.80	0.002	15.60	0.004	26.40	0.005	37.20	0.001
5.40	0.002	16.20	0.003	27.00	0.004	37.80	0.001
6.00	0.002	16.80	0.003	27.60	0.003	38.40	0.001
6.60	0.002	17.40	0.003	28.20	0.003	39.00	0.001
7.20	0.002	18.00	0.002	28.80	0.003	39.60	0.001
7.80	0.003	18.60	0.002	29.40	0.002	40.20	0.001
8.40	0.003	19.20	0.002	30.00	0.002	40.80	0.001
9.00	0.004	19.80	0.002	30.60	0.002	41.40	0.001
9.60	0.004	20.40	0.002	31.20	0.002	42.00	0.001
10.20	0.006	21.00	0.002	31.80	0.002		
10.80	0.008	21.60	0.002	32.40	0.002	*...End*	
11.40	0.013	22.20	0.002	33.00	0.002		
12.00	0.044	22.80	0.002	33.60	0.001		
12.60	0.022	23.40	0.001	34.20	0.001		

Hydrograph Report

Hyd. No. 4

Existing - Impervious (Other)

Hydrograph type	= SCS Runoff	Peak discharge	= 0.358 cfs
Storm frequency	= 10 yrs	Time to peak	= 12.20 hrs
Time interval	= 6 min	Hyd. volume	= 2,613 cuft
Drainage area	= 0.105 ac	Curve number	= 98.000
Basin Slope	= 0.0 %	Hydraulic length	= 0 ft
Tc method	= User	Time of conc. (Tc)	= 10.0 min
Total precip.	= 5.15 in	Distribution	= Custom
Storm duration	= G:\Users\A Castelli\DUSH\Type 2 Distribution.cds	Shape factor	= 484

Hydrograph Discharge Table

(Printed values >= 1.00% of Qp. Print interval = 6)

Time (hrs)	Outflow (cfs)	Time (hrs)	Outflow (cfs)	Time (hrs)	Outflow (cfs)	Time (hrs)	Outflow (cfs)
2.40	0.004	13.20	0.045	24.00	0.006	34.80	0.005
3.00	0.005	13.80	0.028	24.60	0.077	35.40	0.005
3.60	0.005	14.40	0.022	25.20	0.039	36.00	0.005
4.20	0.006	15.00	0.018	25.80	0.028	36.60	0.004
4.80	0.007	15.60	0.015	26.40	0.020	37.20	0.004
5.40	0.007	16.20	0.014	27.00	0.016	37.80	0.004
6.00	0.008	16.80	0.012	27.60	0.013	38.40	0.004
6.60	0.009	17.40	0.011	28.20	0.012	39.00	0.004
7.20	0.010	18.00	0.009	28.80	0.011	39.60	0.004
7.80	0.012	18.60	0.009	29.40	0.010	40.20	0.004
8.40	0.013	19.20	0.008	30.00	0.008	40.80	0.004
9.00	0.015	19.80	0.008	30.60	0.008	41.40	0.004
9.60	0.019	20.40	0.008	31.20	0.007	42.00	0.004
10.20	0.024	21.00	0.007	31.80	0.007		
10.80	0.032	21.60	0.007	32.40	0.007	*...End*	
11.40	0.056	22.20	0.007	33.00	0.006		
12.00	0.185	22.80	0.006	33.60	0.006		
12.60	0.094	23.40	0.006	34.20	0.006		

Hydrograph Report

Hyd. No. 5

Exisiting Conditions

Hydrograph type	= Combine	Peak discharge	= 0.444 cfs
Storm frequency	= 10 yrs	Time to peak	= 12.20 hrs
Time interval	= 6 min	Hyd. volume	= 3,464 cuft
Inflow hyds.	= 1, 2, 3, 4	Contrib. drain. area	= 0.308 ac

Hydrograph Discharge Table

(Printed values >= 1.00% of Qp. Print interval = 6)

Time (hrs)	Hyd. 1 + (cfs)	Hyd. 2 + (cfs)	Hyd. 3 + (cfs)	Hyd. 4 = (cfs)	Outflow (cfs)
2.40	0.000	0.000	0.001	0.004	0.005
3.00	0.000	0.000	0.001	0.005	0.006
3.60	0.000	0.000	0.001	0.005	0.007
4.20	0.000	0.000	0.001	0.006	0.008
4.80	0.000	0.000	0.002	0.007	0.008
5.40	0.000	0.000	0.002	0.007	0.009
6.00	0.000	0.000	0.002	0.008	0.010
6.60	0.000	0.000	0.002	0.009	0.011
7.20	0.000	0.000	0.002	0.010	0.013
7.80	0.000	0.000	0.003	0.012	0.015
8.40	0.000	0.000	0.003	0.013	0.016
9.00	0.000	0.000	0.004	0.015	0.018
9.60	0.000	0.000	0.004	0.019	0.023
10.20	0.000	0.000	0.006	0.024	0.029
10.80	0.000	0.000	0.008	0.032	0.040
11.40	0.000	0.000	0.013	0.056	0.069
12.00	0.000	0.000	0.044	0.185	0.229
12.60	0.004	0.000	0.022	0.094	0.121
13.20	0.005	0.000	0.011	0.045	0.060
13.80	0.004	0.000	0.007	0.028	0.038
14.40	0.003	0.000	0.005	0.022	0.031

Continues on next page...

Hydrograph Discharge Table

Time (hrs)	Hyd. 1 + (cfs)	Hyd. 2 + (cfs)	Hyd. 3 + (cfs)	Hyd. 4 = (cfs)	Outflow (cfs)
15.00	0.003	0.000	0.004	0.018	0.025
15.60	0.003	0.000	0.004	0.015	0.021
16.20	0.003	0.000	0.003	0.014	0.019
16.80	0.002	0.000	0.003	0.012	0.018
17.40	0.002	0.000	0.003	0.011	0.016
18.00	0.002	0.000	0.002	0.009	0.014
18.60	0.002	0.000	0.002	0.009	0.013
19.20	0.002	0.000	0.002	0.008	0.012
19.80	0.002	0.000	0.002	0.008	0.012
20.40	0.002	0.000	0.002	0.008	0.011
21.00	0.002	0.000	0.002	0.007	0.011
21.60	0.002	0.000	0.002	0.007	0.011
22.20	0.002	0.000	0.002	0.007	0.010
22.80	0.002	0.000	0.002	0.006	0.010
23.40	0.002	0.000	0.001	0.006	0.009
24.00	0.002	0.000	0.001	0.006	0.009
24.60	0.001	0.000	0.018	0.077	0.096
25.20	0.002	0.000	0.009	0.039	0.051
25.80	0.002	0.000	0.007	0.028	0.037
26.40	0.002	0.000	0.005	0.020	0.028
27.00	0.002	0.000	0.004	0.016	0.022
27.60	0.002	0.000	0.003	0.013	0.018
28.20	0.002	0.000	0.003	0.012	0.017
28.80	0.002	0.000	0.003	0.011	0.015
29.40	0.002	0.000	0.002	0.010	0.014
30.00	0.001	0.000	0.002	0.008	0.012
30.60	0.001	0.000	0.002	0.008	0.011

Continues on next page...

Hydrograph Discharge Table

Time (hrs)	Hyd. 1 + (cfs)	Hyd. 2 + (cfs)	Hyd. 3 + (cfs)	Hyd. 4 = (cfs)	Outflow (cfs)
31.20	0.001	0.000	0.002	0.007	0.010
31.80	0.001	0.000	0.002	0.007	0.010
32.40	0.001	0.000	0.002	0.007	0.010
33.00	0.001	0.000	0.002	0.006	0.009
33.60	0.001	0.000	0.001	0.006	0.009
34.20	0.001	0.000	0.001	0.006	0.008
34.80	0.001	0.000	0.001	0.005	0.008
35.40	0.001	0.000	0.001	0.005	0.007
36.00	0.001	0.000	0.001	0.005	0.007
36.60	0.001	0.000	0.001	0.004	0.006
37.20	0.001	0.000	0.001	0.004	0.006
37.80	0.001	0.000	0.001	0.004	0.006
38.40	0.001	0.000	0.001	0.004	0.006
39.00	0.001	0.000	0.001	0.004	0.006
39.60	0.001	0.000	0.001	0.004	0.006
40.20	0.001	0.000	0.001	0.004	0.006
40.80	0.001	0.000	0.001	0.004	0.006
41.40	0.001	0.000	0.001	0.004	0.006
42.00	0.001	0.000	0.001	0.004	0.005
42.60	0.001	0.000	0.001	0.004	0.005
43.20	0.001	0.000	0.001	0.003	0.005
43.80	0.001	0.000	0.001	0.003	0.005
44.40	0.001	0.000	0.001	0.003	0.005
45.00	0.001	0.000	0.001	0.003	0.005
45.60	0.001	0.000	0.001	0.003	0.005
46.20	0.001	0.000	0.001	0.003	0.005
46.80	0.001	0.000	0.001	0.003	0.005

Continues on next page...

Hydrograph Report

Hyd. No. 7

Post Dev Uncontrolled - Grass (A)

Hydrograph type	= SCS Runoff	Peak discharge	= 0.007 cfs
Storm frequency	= 10 yrs	Time to peak	= 13.00 hrs
Time interval	= 6 min	Hyd. volume	= 306 cuft
Drainage area	= 0.195 ac	Curve number	= 39.000
Basin Slope	= 0.0 %	Hydraulic length	= 0 ft
Tc method	= User	Time of conc. (Tc)	= 10.0 min
Total precip.	= 5.15 in	Distribution	= Custom
Storm duration	= G:\Users\A Castelli\DUH\Type II Distribution.cds	Shape factor	= 484

Hydrograph Discharge Table

(Printed values >= 1.00% of Qp. Print interval = 6)

Time (hrs)	Outflow (cfs)	Time (hrs)	Outflow (cfs)
12.30	0.001	23.10	0.002
12.90	0.007	23.70	0.002
13.50	0.006		
14.10	0.005	*...End*	
14.70	0.005		
15.30	0.004		
15.90	0.004		
16.50	0.004		
17.10	0.004		
17.70	0.003		
18.30	0.003		
18.90	0.003		
19.50	0.003		
20.10	0.003		
20.70	0.003		
21.30	0.003		
21.90	0.003		
22.50	0.003		

Hydrograph Report

Hyd. No. 8

Post Dev Uncontrolled - Imp (Other)

Hydrograph type	= SCS Runoff	Peak discharge	= 0.126 cfs
Storm frequency	= 10 yrs	Time to peak	= 12.20 hrs
Time interval	= 6 min	Hyd. volume	= 921 cuft
Drainage area	= 0.037 ac	Curve number	= 98.000
Basin Slope	= 0.0 %	Hydraulic length	= 0 ft
Tc method	= User	Time of conc. (Tc)	= 10.0 min
Total precip.	= 5.15 in	Distribution	= Custom
Storm duration	= G:\Users\A Castelli\DUSH\Type 2 Distribution.cds	Shape factor	= 484

Hydrograph Discharge Table

(Printed values >= 1.00% of Qp. Print interval = 6)

Time (hrs)	Outflow (cfs)	Time (hrs)	Outflow (cfs)	Time (hrs)	Outflow (cfs)	Time (hrs)	Outflow (cfs)
2.40	0.001	13.20	0.016	24.00	0.002	34.80	0.002
3.00	0.002	13.80	0.010	24.60	0.027	35.40	0.002
3.60	0.002	14.40	0.008	25.20	0.014	36.00	0.002
4.20	0.002	15.00	0.006	25.80	0.010	36.60	0.002
4.80	0.002	15.60	0.005	26.40	0.007	37.20	0.002
5.40	0.003	16.20	0.005	27.00	0.006	37.80	0.001
6.00	0.003	16.80	0.004	27.60	0.005	38.40	0.001
6.60	0.003	17.40	0.004	28.20	0.004	39.00	0.001
7.20	0.004	18.00	0.003	28.80	0.004	39.60	0.001
7.80	0.004	18.60	0.003	29.40	0.003	40.20	0.001
8.40	0.005	19.20	0.003	30.00	0.003	40.80	0.001
9.00	0.005	19.80	0.003	30.60	0.003	41.40	0.001
9.60	0.007	20.40	0.003	31.20	0.003	42.00	0.001
10.20	0.008	21.00	0.003	31.80	0.002		
10.80	0.011	21.60	0.002	32.40	0.002	*...End*	
11.40	0.020	22.20	0.002	33.00	0.002		
12.00	0.065	22.80	0.002	33.60	0.002		
12.60	0.033	23.40	0.002	34.20	0.002		

Hydrograph Report

Hyd. No. 9

Post Development - Uncontrolled Area

Hydrograph type	= Combine	Peak discharge	= 0.126 cfs
Storm frequency	= 10 yrs	Time to peak	= 12.20 hrs
Time interval	= 6 min	Hyd. volume	= 1,227 cuft
Inflow hyds.	= 7, 8	Contrib. drain. area	= 0.232 ac

Hydrograph Discharge Table

(Printed values >= 1.00% of Qp. Print interval = 6)

Time (hrs)	Hyd. 7 + (cfs)	Hyd. 8 = (cfs)	Outflow (cfs)
2.40	0.000	0.001	0.001
3.00	0.000	0.002	0.002
3.60	0.000	0.002	0.002
4.20	0.000	0.002	0.002
4.80	0.000	0.002	0.002
5.40	0.000	0.003	0.003
6.00	0.000	0.003	0.003
6.60	0.000	0.003	0.003
7.20	0.000	0.004	0.004
7.80	0.000	0.004	0.004
8.40	0.000	0.005	0.005
9.00	0.000	0.005	0.005
9.60	0.000	0.007	0.007
10.20	0.000	0.008	0.008
10.80	0.000	0.011	0.011
11.40	0.000	0.020	0.020
12.00	0.000	0.065	0.065
12.60	0.006	0.033	0.039
13.20	0.007	0.016	0.023
13.80	0.005	0.010	0.015
14.40	0.005	0.008	0.013

Continues on next page...

Hydrograph Discharge Table

Time (hrs)	Hyd. 7 + (cfs)	Hyd. 8 = (cfs)	Outflow (cfs)
15.00	0.004	0.006	0.011
15.60	0.004	0.005	0.009
16.20	0.004	0.005	0.009
16.80	0.004	0.004	0.008
17.40	0.003	0.004	0.007
18.00	0.003	0.003	0.006
18.60	0.003	0.003	0.006
19.20	0.003	0.003	0.006
19.80	0.003	0.003	0.006
20.40	0.003	0.003	0.005
21.00	0.003	0.003	0.005
21.60	0.003	0.002	0.005
22.20	0.003	0.002	0.005
22.80	0.002	0.002	0.005
23.40	0.002	0.002	0.004
24.00	0.002	0.002	0.004
24.60	0.001	0.027	0.028
25.20	0.003	0.014	0.017
25.80	0.004	0.010	0.013
26.40	0.003	0.007	0.011
27.00	0.003	0.006	0.009
27.60	0.003	0.005	0.007
28.20	0.003	0.004	0.007
28.80	0.003	0.004	0.006
29.40	0.002	0.003	0.006
30.00	0.002	0.003	0.005
30.60	0.002	0.003	0.005

Continues on next page...

Hydrograph Discharge Table

Time (hrs)	Hyd. 7 + (cfs)	Hyd. 8 = (cfs)	Outflow (cfs)
31.20	0.002	0.003	0.005
31.80	0.002	0.002	0.004
32.40	0.002	0.002	0.004
33.00	0.002	0.002	0.004
33.60	0.002	0.002	0.004
34.20	0.002	0.002	0.004
34.80	0.002	0.002	0.004
35.40	0.002	0.002	0.003
36.00	0.002	0.002	0.003
36.60	0.001	0.002	0.003
37.20	0.001	0.002	0.003
37.80	0.001	0.001	0.003
38.40	0.001	0.001	0.003
39.00	0.001	0.001	0.003
39.60	0.001	0.001	0.003
40.20	0.001	0.001	0.003
40.80	0.001	0.001	0.003
41.40	0.001	0.001	0.003
42.00	0.001	0.001	0.003
42.60	0.001	0.001	0.003
43.20	0.001	0.001	0.003
43.80	0.001	0.001	0.002
44.40	0.001	0.001	0.002
45.00	0.001	0.001	0.002
45.60	0.001	0.001	0.002
46.20	0.001	0.001	0.002
46.80	0.001	0.001	0.002

Continues on next page...

Hydrograph Discharge Table

Time (hrs)	Hyd. 7 + (cfs)	Hyd. 8 = (cfs)	Outflow (cfs)
47.40	0.001	0.001	0.002
48.00	0.001	0.001	0.002

...End

Hydrograph Report

Hyd. No. 11

Post Dev Controlled - Imp (Roof 1)

Hydrograph type	= SCS Runoff	Peak discharge	= 0.160 cfs
Storm frequency	= 10 yrs	Time to peak	= 12.20 hrs
Time interval	= 6 min	Hyd. volume	= 1,170 cuft
Drainage area	= 0.047 ac	Curve number	= 98.000
Basin Slope	= 0.0 %	Hydraulic length	= 0 ft
Tc method	= User	Time of conc. (Tc)	= 10.0 min
Total precip.	= 5.15 in	Distribution	= Custom
Storm duration	= G:\Users\A Castelli\DUSH\Type 2 Distribution.cds	Shape factor	= 484

Hydrograph Discharge Table

(Printed values >= 1.00% of Qp. Print interval = 6)

Time (hrs)	Outflow (cfs)	Time (hrs)	Outflow (cfs)	Time (hrs)	Outflow (cfs)	Time (hrs)	Outflow (cfs)
2.40	0.002	13.20	0.020	24.00	0.003	34.80	0.002
3.00	0.002	13.80	0.012	24.60	0.034	35.40	0.002
3.60	0.002	14.40	0.010	25.20	0.017	36.00	0.002
4.20	0.003	15.00	0.008	25.80	0.012	36.60	0.002
4.80	0.003	15.60	0.007	26.40	0.009	37.20	0.002
5.40	0.003	16.20	0.006	27.00	0.007	37.80	0.002
6.00	0.003	16.80	0.005	27.60	0.006	38.40	0.002
6.60	0.004	17.40	0.005	28.20	0.005	39.00	0.002
7.20	0.005	18.00	0.004	28.80	0.005	39.60	0.002
7.80	0.005	18.60	0.004	29.40	0.004	40.20	0.002
8.40	0.006	19.20	0.004	30.00	0.004	40.80	0.002
9.00	0.007	19.80	0.004	30.60	0.003	41.40	0.002
9.60	0.008	20.40	0.003	31.20	0.003	42.00	0.002
10.20	0.011	21.00	0.003	31.80	0.003		
10.80	0.014	21.60	0.003	32.40	0.003	*...End*	
11.40	0.025	22.20	0.003	33.00	0.003		
12.00	0.083	22.80	0.003	33.60	0.003		
12.60	0.042	23.40	0.003	34.20	0.003		

Hydrograph Report

Hyd. No. 12

Underground Chamber 1

Hydrograph type	= Reservoir	Peak discharge	= 0.000 cfs
Storm frequency	= 10 yrs	Time to peak	= n/a
Time interval	= 6 min	Hyd. volume	= 0 cuft
Inflow hyd. No.	= 11 - Post Dev Controlled Runoff (Roof)	Reservoir name	= Stormtech SC-740
Max. Elevation	= 128.82 ft	Max. Storage	= 296 cuft

Storage Indication method used. Exfiltration extracted from Outflow.

...End

Hydrograph Report

Hyd. No. 14

Post Dev Controlled - Imp (Roof 2)

Hydrograph type	= SCS Runoff	Peak discharge	= 0.099 cfs
Storm frequency	= 10 yrs	Time to peak	= 12.20 hrs
Time interval	= 6 min	Hyd. volume	= 722 cuft
Drainage area	= 0.029 ac	Curve number	= 98.000
Basin Slope	= 0.0 %	Hydraulic length	= 0 ft
Tc method	= User	Time of conc. (Tc)	= 10.0 min
Total precip.	= 5.15 in	Distribution	= Custom
Storm duration	= G:\Users\A Castelli\DUSH\Type 2 Distribution.cds	Shape factor	= 484

Hydrograph Discharge Table

(Printed values >= 1.00% of Qp. Print interval = 6)

Time (hrs)	Outflow (cfs)	Time (hrs)	Outflow (cfs)	Time (hrs)	Outflow (cfs)	Time (hrs)	Outflow (cfs)
2.40	0.001	13.20	0.012	24.00	0.002	34.80	0.001
3.00	0.001	13.80	0.008	24.60	0.021	35.40	0.001
3.60	0.002	14.40	0.006	25.20	0.011	36.00	0.001
4.20	0.002	15.00	0.005	25.80	0.008	36.60	0.001
4.80	0.002	15.60	0.004	26.40	0.006	37.20	0.001
5.40	0.002	16.20	0.004	27.00	0.004	37.80	0.001
6.00	0.002	16.80	0.003	27.60	0.004	38.40	0.001
6.60	0.002	17.40	0.003	28.20	0.003	39.00	0.001
7.20	0.003	18.00	0.003	28.80	0.003	39.60	0.001
7.80	0.003	18.60	0.002	29.40	0.003	40.20	0.001
8.40	0.004	19.20	0.002	30.00	0.002	40.80	0.001
9.00	0.004	19.80	0.002	30.60	0.002	41.40	0.001
9.60	0.005	20.40	0.002	31.20	0.002	42.00	0.001
10.20	0.007	21.00	0.002	31.80	0.002		
10.80	0.009	21.60	0.002	32.40	0.002	*...End*	
11.40	0.015	22.20	0.002	33.00	0.002		
12.00	0.051	22.80	0.002	33.60	0.002		
12.60	0.026	23.40	0.002	34.20	0.002		

Hydrograph Report

Hyd. No. 15

Underground Chamber 2

Hydrograph type	= Reservoir	Peak discharge	= 0.000 cfs
Storm frequency	= 10 yrs	Time to peak	= n/a
Time interval	= 6 min	Hyd. volume	= 0 cuft
Inflow hyd. No.	= 14 - Post Dev Controlled Runoff (Roof 2)	Reservoir name	= Stormtech SC-740
Max. Elevation	= 129.05 ft	Max. Storage	= 189 cuft

Storage Indication method used. Exfiltration extracted from Outflow.

...End

Hydrograph Report

Hyd. No. 17

Total Discharge

Hydrograph type	= Combine	Peak discharge	= 0.126 cfs
Storm frequency	= 10 yrs	Time to peak	= 12.20 hrs
Time interval	= 6 min	Hyd. volume	= 1,227 cuft
Inflow hyds.	= 9, 12, 15	Contrib. drain. area	= 0.000 ac

Hydrograph Discharge Table

(Printed values >= 1.00% of Qp. Print interval = 6)

Time (hrs)	Hyd. 9 + (cfs)	Hyd. 12 + (cfs)	Hyd. 15 + (cfs)	Outflow (cfs)
2.40	0.001	0.000	0.000	0.001
3.00	0.002	0.000 <<	0.000 <<	0.002
3.60	0.002	0.000	0.000 <<	0.002
4.20	0.002	0.000	0.000	0.002
4.80	0.002	0.000 <<	0.000	0.002
5.40	0.003	0.000 <<	0.000	0.003
6.00	0.003	0.000 <<	0.000 <<	0.003
6.60	0.003	0.000 <<	0.000	0.003
7.20	0.004	0.000 <<	0.000 <<	0.004
7.80	0.004	0.000 <<	0.000	0.004
8.40	0.005	0.000	0.000 <<	0.005
9.00	0.005	0.000	0.000	0.005
9.60	0.007	0.000 <<	0.000 <<	0.007
10.20	0.008	0.000 <<	0.000 <<	0.008
10.80	0.011	0.000 <<	0.000 <<	0.011
11.40	0.020	0.000 <<	0.000 <<	0.020
12.00	0.065	0.000 <<	0.000 <<	0.065
12.60	0.039	0.000 <<	0.000 <<	0.039
13.20	0.023	0.000 <<	0.000 <<	0.023
13.80	0.015	0.000 <<	0.000 <<	0.015
14.40	0.013	0.000 <<	0.000 <<	0.013

Continues on next page...

Hydrograph Discharge Table

Time (hrs)	Hyd. 9 + (cfs)	Hyd. 12 + (cfs)	Hyd. 15 + (cfs)	Outflow (cfs)
15.00	0.011	0.000 <<	0.000 <<	0.011
15.60	0.009	0.000 <<	0.000 <<	0.009
16.20	0.009	0.000 <<	0.000 <<	0.009
16.80	0.008	0.000 <<	0.000 <<	0.008
17.40	0.007	0.000 <<	0.000 <<	0.007
18.00	0.006	0.000 <<	0.000 <<	0.006
18.60	0.006	0.000 <<	0.000 <<	0.006
19.20	0.006	0.000 <<	0.000 <<	0.006
19.80	0.006	0.000 <<	0.000 <<	0.006
20.40	0.005	0.000 <<	0.000 <<	0.005
21.00	0.005	0.000 <<	0.000 <<	0.005
21.60	0.005	0.000 <<	0.000 <<	0.005
22.20	0.005	0.000	0.000 <<	0.005
22.80	0.005	0.000	0.000 <<	0.005
23.40	0.004	0.000 <<	0.000	0.004
24.00	0.004	0.000 <<	0.000	0.004
24.60	0.028	0.000 <<	0.000 <<	0.028
25.20	0.017	0.000 <<	0.000 <<	0.017
25.80	0.013	0.000 <<	0.000 <<	0.013
26.40	0.011	0.000 <<	0.000 <<	0.011
27.00	0.009	0.000 <<	0.000 <<	0.009
27.60	0.007	0.000 <<	0.000 <<	0.007
28.20	0.007	0.000 <<	0.000 <<	0.007
28.80	0.006	0.000 <<	0.000 <<	0.006
29.40	0.006	0.000 <<	0.000 <<	0.006
30.00	0.005	0.000	0.000 <<	0.005
30.60	0.005	0.000	0.000	0.005

Continues on next page...

Hydrograph Discharge Table

Time (hrs)	Hyd. 9 + (cfs)	Hyd. 12 + (cfs)	Hyd. 15 + (cfs)	Outflow (cfs)
31.20	0.005	0.000 <<	0.000 <<	0.005
31.80	0.004	0.000	0.000	0.004
32.40	0.004	0.000 <<	0.000 <<	0.004
33.00	0.004	0.000 <<	0.000 <<	0.004
33.60	0.004	0.000 <<	0.000 <<	0.004
34.20	0.004	0.000 <<	0.000	0.004
34.80	0.004	0.000	0.000	0.004
35.40	0.003	0.000 <<	0.000 <<	0.003
36.00	0.003	0.000 <<	0.000 <<	0.003
36.60	0.003	0.000 <<	0.000 <<	0.003
37.20	0.003	0.000	0.000	0.003
37.80	0.003	0.000 <<	0.000 <<	0.003
38.40	0.003	0.000 <<	0.000 <<	0.003
39.00	0.003	0.000	0.000 <<	0.003
39.60	0.003	0.000 <<	0.000 <<	0.003
40.20	0.003	0.000 <<	0.000 <<	0.003
40.80	0.003	0.000 <<	0.000 <<	0.003
41.40	0.003	0.000 <<	0.000	0.003
42.00	0.003	0.000	0.000 <<	0.003
42.60	0.003	0.000 <<	0.000 <<	0.003
43.20	0.003	0.000	0.000 <<	0.003
43.80	0.002	0.000 <<	0.000 <<	0.002
44.40	0.002	0.000 <<	0.000 <<	0.002
45.00	0.002	0.000 <<	0.000 <<	0.002
45.60	0.002	0.000 <<	0.000 <<	0.002
46.20	0.002	0.000 <<	0.000 <<	0.002
46.80	0.002	0.000 <<	0.000	0.002

Continues on next page...

Hydrograph Discharge Table

Time (hrs)	Hyd. 9 + (cfs)	Hyd. 12 + (cfs)	Hyd. 15 + (cfs)	Outflow (cfs)
47.40	0.002	0.000 <<	0.000 <<	0.002
48.00	0.002	0.000 <<	0.000 <<	0.002

...End

Hydrograph Summary Report

Hydraflow Hydrographs Extension for Autodesk® Civil 3D® by Autodesk, Inc. v2024

Hyd. No.	Hydrograph type (origin)	Peak flow (cfs)	Time interval (min)	Time to Peak (min)	Hyd. volume (cuft)	Inflow hyd(s)	Maximum elevation (ft)	Total strge used (cuft)	Hydrograph Description
1	SCS Runoff	0.117	6	732	1,293	------	------	------	Existing - Grass (A)
2	SCS Runoff	0.007	6	750	187	------	------	------	Existing - Woods (A)
3	SCS Runoff	0.146	6	732	1,075	------	------	------	Existing - Impervious (Roof)
4	SCS Runoff	0.613	6	732	4,516	------	------	------	Existing - Impervious (Other)
5	Combine	0.877	6	732	7,071	1, 2, 3, 4	------	------	Exisiting Conditions
7	SCS Runoff	0.171	6	732	1,896	------	------	------	Post Dev Uncontrolled - Grass (A)
8	SCS Runoff	0.216	6	732	1,591	------	------	------	Post Dev Uncontrolled - Imp (Other)
9	Combine	0.387	6	732	3,487	7, 8	------	------	Post Development - Uncontrolled Are
11	SCS Runoff	0.275	6	732	2,021	------	------	------	Post Dev Controlled - Imp (Roof 1)
12	Reservoir	0.113	6	750	112	11	130.26	500	Underground Chamber 1
14	SCS Runoff	0.169	6	732	1,247	------	------	------	Post Dev Controlled - Imp (Roof 2)
15	Reservoir	0.146	6	744	111	14	130.29	281	Underground Chamber 2
17	Combine	0.400	6	744	3,711	9, 12, 15,	------	------	Total Discharge

Hydrograph Report

Hyd. No. 1

Existing - Grass (A)

Hydrograph type	= SCS Runoff	Peak discharge	= 0.117 cfs
Storm frequency	= 100 yrs	Time to peak	= 12.20 hrs
Time interval	= 6 min	Hyd. volume	= 1,293 cuft
Drainage area	= 0.133 ac	Curve number	= 39.000
Basin Slope	= 0.0 %	Hydraulic length	= 0 ft
Tc method	= User	Time of conc. (Tc)	= 10.0 min
Total precip.	= 8.78 in	Distribution	= Custom
Storm duration	= G:\Users\A Castelli\DUSH\Type 2 Distribution.cds	Shape factor	= 484

Hydrograph Discharge Table

(Printed values >= 1.00% of Qp. Print interval = 6)

Time (hrs)	Outflow (cfs)	Time (hrs)	Outflow (cfs)	Time (hrs)	Outflow (cfs)	Time (hrs)	Outflow (cfs)
11.90	0.005	22.70	0.006	33.50	0.005	44.30	0.003
12.50	0.065	23.30	0.006	34.10	0.005	44.90	0.003
13.10	0.034	23.90	0.006	34.70	0.005	45.50	0.003
13.70	0.022	24.50	0.052	35.30	0.005	46.10	0.003
14.30	0.018	25.10	0.027	35.90	0.004	46.70	0.003
14.90	0.015	25.70	0.019	36.50	0.004	47.30	0.003
15.50	0.013	26.30	0.015	37.10	0.004	47.90	0.003
16.10	0.012	26.90	0.012	37.70	0.004		
16.70	0.011	27.50	0.010	38.30	0.004	*...End*	
17.30	0.010	28.10	0.010	38.90	0.004		
17.90	0.009	28.70	0.009	39.50	0.004		
18.50	0.008	29.30	0.008	40.10	0.004		
19.10	0.008	29.90	0.007	40.70	0.004		
19.70	0.008	30.50	0.006	41.30	0.004		
20.30	0.007	31.10	0.006	41.90	0.004		
20.90	0.007	31.70	0.006	42.50	0.003		
21.50	0.007	32.30	0.006	43.10	0.003		
22.10	0.007	32.90	0.006	43.70	0.003		

Hydrograph Report

Hyd. No. 2

Existing - Woods (A)

Hydrograph type	= SCS Runoff	Peak discharge	= 0.007 cfs
Storm frequency	= 100 yrs	Time to peak	= 12.50 hrs
Time interval	= 6 min	Hyd. volume	= 187 cuft
Drainage area	= 0.045 ac	Curve number	= 30.000
Basin Slope	= 0.0 %	Hydraulic length	= 0 ft
Tc method	= User	Time of conc. (Tc)	= 10.0 min
Total precip.	= 8.78 in	Distribution	= Custom
Storm duration	= G:\Users\A Castelli\DUSH\Type 2 Distribution.cds	Shape factor	= 484

Hydrograph Discharge Table

(Printed values >= 1.00% of Qp. Print interval = 6)

Time (hrs)	Outflow (cfs)	Time (hrs)	Outflow (cfs)	Time (hrs)	Outflow (cfs)	Time (hrs)	Outflow (cfs)
12.20	0.001	23.00	0.001	33.80	0.001	44.60	0.001
12.80	0.006	23.60	0.001	34.40	0.001	45.20	0.001
13.40	0.004	24.20	0.001	35.00	0.001	45.80	0.001
14.00	0.003	24.80	0.003	35.60	0.001	46.40	0.001
14.60	0.003	25.40	0.003	36.20	0.001	47.00	0.001
15.20	0.002	26.00	0.002	36.80	0.001	47.60	0.001
15.80	0.002	26.60	0.002	37.40	0.001	48.20	0.000
16.40	0.002	27.20	0.002	38.00	0.001		
17.00	0.002	27.80	0.002	38.60	0.001		
17.60	0.002	28.40	0.002	39.20	0.001		
18.20	0.002	29.00	0.001	39.80	0.001		
18.80	0.002	29.60	0.001	40.40	0.001		
19.40	0.001	30.20	0.001	41.00	0.001		
20.00	0.001	30.80	0.001	41.60	0.001		
20.60	0.001	31.40	0.001	42.20	0.001		
21.20	0.001	32.00	0.001	42.80	0.001		
21.80	0.001	32.60	0.001	43.40	0.001		
22.40	0.001	33.20	0.001	44.00	0.001		

...End

Hydrograph Report

Hyd. No. 3

Existing - Impervious (Roof)

Hydrograph type	= SCS Runoff	Peak discharge	= 0.146 cfs
Storm frequency	= 100 yrs	Time to peak	= 12.20 hrs
Time interval	= 6 min	Hyd. volume	= 1,075 cuft
Drainage area	= 0.025 ac	Curve number	= 98.000
Basin Slope	= 0.0 %	Hydraulic length	= 0 ft
Tc method	= User	Time of conc. (Tc)	= 10.0 min
Total precip.	= 8.78 in	Distribution	= Custom
Storm duration	= G:\Users\A Castelli\DUSH\Type 2 Distribution.cds	Shape factor	= 484

Hydrograph Discharge Table

(Printed values >= 1.00% of Qp. Print interval = 6)

Time (hrs)	Outflow (cfs)	Time (hrs)	Outflow (cfs)	Time (hrs)	Outflow (cfs)	Time (hrs)	Outflow (cfs)
1.70	0.002	12.50	0.048	23.30	0.002	34.10	0.002
2.30	0.002	13.10	0.020	23.90	0.002	34.70	0.002
2.90	0.002	13.70	0.012	24.50	0.045	35.30	0.002
3.50	0.003	14.30	0.009	25.10	0.018	35.90	0.002
4.10	0.003	14.90	0.008	25.70	0.012	36.50	0.002
4.70	0.003	15.50	0.006	26.30	0.009	37.10	0.002
5.30	0.003	16.10	0.006	26.90	0.007	37.70	0.002
5.90	0.003	16.70	0.005	27.50	0.005	38.30	0.002
6.50	0.004	17.30	0.004	28.10	0.005	38.90	0.002
7.10	0.004	17.90	0.004	28.70	0.005	39.50	0.002
7.70	0.005	18.50	0.004	29.30	0.004	40.10	0.002
8.30	0.006	19.10	0.003	29.90	0.004	40.70	0.002
8.90	0.006	19.70	0.003	30.50	0.003	41.30	0.002
9.50	0.007	20.30	0.003	31.10	0.003	41.90	0.001
10.10	0.009	20.90	0.003	31.70	0.003		
10.70	0.012	21.50	0.003	32.30	0.003	*...End*	
11.30	0.021	22.10	0.003	32.90	0.003		
11.90	0.052	22.70	0.003	33.50	0.002		

Hydrograph Report

Hyd. No. 4

Existing - Impervious (Other)

Hydrograph type	= SCS Runoff	Peak discharge	= 0.613 cfs
Storm frequency	= 100 yrs	Time to peak	= 12.20 hrs
Time interval	= 6 min	Hyd. volume	= 4,516 cuft
Drainage area	= 0.105 ac	Curve number	= 98.000
Basin Slope	= 0.0 %	Hydraulic length	= 0 ft
Tc method	= User	Time of conc. (Tc)	= 10.0 min
Total precip.	= 8.78 in	Distribution	= Custom
Storm duration	= G:\Users\A Castelli\DUSH\Type 2 Distribution.cds	Shape factor	= 484

Hydrograph Discharge Table

(Printed values >= 1.00% of Qp. Print interval = 6)

Time -- Outflow (hrs cfs)		Time -- Outflow (hrs cfs)		Time -- Outflow (hrs cfs)		Time -- Outflow (hrs cfs)	
1.70	0.006	12.50	0.201	23.30	0.010	34.10	0.010
2.30	0.008	13.10	0.085	23.90	0.010	34.70	0.009
2.90	0.010	13.70	0.050	24.50	0.188	35.30	0.009
3.50	0.011	14.30	0.040	25.10	0.075	35.90	0.008
4.10	0.012	14.90	0.032	25.70	0.049	36.50	0.008
4.70	0.013	15.50	0.026	26.30	0.036	37.10	0.007
5.30	0.013	16.10	0.024	26.90	0.029	37.70	0.007
5.90	0.014	16.70	0.021	27.50	0.023	38.30	0.007
6.50	0.016	17.30	0.019	28.10	0.021	38.90	0.007
7.10	0.018	17.90	0.017	28.70	0.019	39.50	0.007
7.70	0.021	18.50	0.015	29.30	0.017	40.10	0.007
8.30	0.023	19.10	0.014	29.90	0.015	40.70	0.007
8.90	0.026	19.70	0.014	30.50	0.013	41.30	0.006
9.50	0.031	20.30	0.013	31.10	0.013	41.90	0.006
10.10	0.040	20.90	0.013	31.70	0.012		
10.70	0.051	21.50	0.012	32.30	0.012	*...End*	
11.30	0.087	22.10	0.012	32.90	0.011		
11.90	0.219	22.70	0.011	33.50	0.010		

Hydrograph Report

Hyd. No. 5

Exisiting Conditions

Hydrograph type	= Combine	Peak discharge	= 0.877 cfs
Storm frequency	= 100 yrs	Time to peak	= 12.20 hrs
Time interval	= 6 min	Hyd. volume	= 7,071 cuft
Inflow hyds.	= 1, 2, 3, 4	Contrib. drain. area	= 0.308 ac

Hydrograph Discharge Table

(Printed values >= 1.00% of Qp. Print interval = 6)

Time (hrs)	Hyd. 1 + (cfs)	Hyd. 2 + (cfs)	Hyd. 3 + (cfs)	Hyd. 4 = (cfs)	Outflow (cfs)
2.40	0.000	0.000	0.002	0.009	0.011
3.00	0.000	0.000	0.002	0.010	0.012
3.60	0.000	0.000	0.003	0.011	0.014
4.20	0.000	0.000	0.003	0.012	0.015
4.80	0.000	0.000	0.003	0.013	0.016
5.40	0.000	0.000	0.003	0.014	0.017
6.00	0.000	0.000	0.003	0.014	0.018
6.60	0.000	0.000	0.004	0.016	0.020
7.20	0.000	0.000	0.004	0.019	0.023
7.80	0.000	0.000	0.005	0.021	0.026
8.40	0.000	0.000	0.006	0.024	0.029
9.00	0.000	0.000	0.006	0.026	0.032
9.60	0.000	0.000	0.008	0.033	0.041
10.20	0.000	0.000	0.010	0.041	0.051
10.80	0.000	0.000	0.013	0.056	0.069
11.40	0.000	0.000	0.023	0.096	0.119
12.00	0.021	0.000	0.076	0.317	0.414
12.60	0.056	0.006	0.038	0.161	0.261
13.20	0.031	0.005	0.018	0.076	0.131
13.80	0.021	0.003	0.011	0.047	0.082
14.40	0.018	0.003	0.009	0.038	0.068

Continues on next page...

Hydrograph Discharge Table

Time (hrs)	Hyd. 1 + (cfs)	Hyd. 2 + (cfs)	Hyd. 3 + (cfs)	Hyd. 4 = (cfs)	Outflow (cfs)
15.00	0.014	0.003	0.007	0.030	0.054
15.60	0.013	0.002	0.006	0.025	0.046
16.20	0.012	0.002	0.006	0.023	0.042
16.80	0.011	0.002	0.005	0.021	0.038
17.40	0.010	0.002	0.004	0.018	0.034
18.00	0.009	0.002	0.004	0.016	0.030
18.60	0.008	0.002	0.004	0.015	0.028
19.20	0.008	0.002	0.003	0.014	0.027
19.80	0.008	0.001	0.003	0.014	0.026
20.40	0.007	0.001	0.003	0.013	0.025
21.00	0.007	0.001	0.003	0.013	0.024
21.60	0.007	0.001	0.003	0.012	0.023
22.20	0.006	0.001	0.003	0.011	0.022
22.80	0.006	0.001	0.003	0.011	0.021
23.40	0.006	0.001	0.002	0.010	0.020
24.00	0.006	0.001	0.002	0.010	0.019
24.60	0.040	0.003	0.031	0.131	0.206
25.20	0.024	0.003	0.016	0.067	0.110
25.80	0.019	0.003	0.011	0.047	0.079
26.40	0.015	0.002	0.008	0.035	0.060
27.00	0.012	0.002	0.007	0.027	0.047
27.60	0.010	0.002	0.005	0.023	0.040
28.20	0.009	0.002	0.005	0.021	0.036
28.80	0.009	0.001	0.004	0.019	0.033
29.40	0.008	0.001	0.004	0.016	0.030
30.00	0.007	0.001	0.003	0.014	0.026
30.60	0.006	0.001	0.003	0.013	0.024

Continues on next page...

Hydrograph Discharge Table

Time (hrs)	Hyd. 1 + (cfs)	Hyd. 2 + (cfs)	Hyd. 3 + (cfs)	Hyd. 4 = (cfs)	Outflow (cfs)
31.20	0.006	0.001	0.003	0.013	0.023
31.80	0.006	0.001	0.003	0.012	0.022
32.40	0.006	0.001	0.003	0.011	0.021
33.00	0.006	0.001	0.003	0.011	0.020
33.60	0.005	0.001	0.002	0.010	0.019
34.20	0.005	0.001	0.002	0.010	0.018
34.80	0.005	0.001	0.002	0.009	0.017
35.40	0.004	0.001	0.002	0.008	0.016
36.00	0.004	0.001	0.002	0.008	0.015
36.60	0.004	0.001	0.002	0.008	0.014
37.20	0.004	0.001	0.002	0.007	0.014
37.80	0.004	0.001	0.002	0.007	0.014
38.40	0.004	0.001	0.002	0.007	0.013
39.00	0.004	0.001	0.002	0.007	0.013
39.60	0.004	0.001	0.002	0.007	0.013
40.20	0.004	0.001	0.002	0.007	0.013
40.80	0.004	0.001	0.002	0.007	0.012
41.40	0.004	0.001	0.002	0.006	0.012
42.00	0.004	0.001	0.001	0.006	0.012
42.60	0.003	0.001	0.001	0.006	0.012
43.20	0.003	0.001	0.001	0.006	0.011
43.80	0.003	0.001	0.001	0.006	0.011
44.40	0.003	0.001	0.001	0.006	0.011
45.00	0.003	0.001	0.001	0.006	0.011
45.60	0.003	0.001	0.001	0.005	0.010
46.20	0.003	0.001	0.001	0.005	0.010
46.80	0.003	0.001	0.001	0.005	0.010

Continues on next page...

Hydrograph Discharge Table

Time (hrs)	Hyd. 1 + (cfs)	Hyd. 2 + (cfs)	Hyd. 3 + (cfs)	Hyd. 4 = (cfs)	Outflow (cfs)
47.40	0.003	0.001	0.001	0.005	0.010
48.00	0.003	0.001	0.001	0.005	0.009

...End

Hydrograph Report

Hyd. No. 7

Post Dev Uncontrolled - Grass (A)

Hydrograph type	= SCS Runoff	Peak discharge	= 0.171 cfs
Storm frequency	= 100 yrs	Time to peak	= 12.20 hrs
Time interval	= 6 min	Hyd. volume	= 1,896 cuft
Drainage area	= 0.195 ac	Curve number	= 39.000
Basin Slope	= 0.0 %	Hydraulic length	= 0 ft
Tc method	= User	Time of conc. (Tc)	= 10.0 min
Total precip.	= 8.78 in	Distribution	= Custom
Storm duration	= G:\Users\A Castelli\DUSH\Type 2 Distribution.cds	Shape factor	= 484

Hydrograph Discharge Table

(Printed values >= 1.00% of Qp. Print interval = 6)

Time (hrs)	Outflow (cfs)	Time (hrs)	Outflow (cfs)	Time (hrs)	Outflow (cfs)	Time (hrs)	Outflow (cfs)
11.90	0.007	22.70	0.009	33.50	0.008	44.30	0.005
12.50	0.095	23.30	0.009	34.10	0.007	44.90	0.005
13.10	0.050	23.90	0.008	34.70	0.007	45.50	0.005
13.70	0.032	24.50	0.077	35.30	0.007	46.10	0.004
14.30	0.027	25.10	0.039	35.90	0.006	46.70	0.004
14.90	0.022	25.70	0.028	36.50	0.006	47.30	0.004
15.50	0.019	26.30	0.022	37.10	0.006	47.90	0.004
16.10	0.017	26.90	0.018	37.70	0.006		
16.70	0.016	27.50	0.015	38.30	0.006	*...End*	
17.30	0.014	28.10	0.014	38.90	0.006		
17.90	0.013	28.70	0.013	39.50	0.006		
18.50	0.012	29.30	0.012	40.10	0.005		
19.10	0.011	29.90	0.010	40.70	0.005		
19.70	0.011	30.50	0.009	41.30	0.005		
20.30	0.011	31.10	0.009	41.90	0.005		
20.90	0.010	31.70	0.009	42.50	0.005		
21.50	0.010	32.30	0.009	43.10	0.005		
22.10	0.010	32.90	0.008	43.70	0.005		

Hydrograph Report

Hyd. No. 8

Post Dev Uncontrolled - Imp (Other)

Hydrograph type	= SCS Runoff	Peak discharge	= 0.216 cfs
Storm frequency	= 100 yrs	Time to peak	= 12.20 hrs
Time interval	= 6 min	Hyd. volume	= 1,591 cuft
Drainage area	= 0.037 ac	Curve number	= 98.000
Basin Slope	= 0.0 %	Hydraulic length	= 0 ft
Tc method	= User	Time of conc. (Tc)	= 10.0 min
Total precip.	= 8.78 in	Distribution	= Custom
Storm duration	= G:\Users\A Castelli\DUSH\Type 2 Distribution.cds	Shape factor	= 484

Hydrograph Discharge Table

(Printed values >= 1.00% of Qp. Print interval = 6)

Time (hrs)	Outflow (cfs)	Time (hrs)	Outflow (cfs)	Time (hrs)	Outflow (cfs)	Time (hrs)	Outflow (cfs)
1.70	0.002	12.50	0.071	23.30	0.004	34.10	0.003
2.30	0.003	13.10	0.030	23.90	0.003	34.70	0.003
2.90	0.003	13.70	0.018	24.50	0.066	35.30	0.003
3.50	0.004	14.30	0.014	25.10	0.027	35.90	0.003
4.10	0.004	14.90	0.011	25.70	0.017	36.50	0.003
4.70	0.004	15.50	0.009	26.30	0.013	37.10	0.003
5.30	0.005	16.10	0.008	26.90	0.010	37.70	0.003
5.90	0.005	16.70	0.007	27.50	0.008	38.30	0.003
6.50	0.006	17.30	0.007	28.10	0.007	38.90	0.002
7.10	0.006	17.90	0.006	28.70	0.007	39.50	0.002
7.70	0.007	18.50	0.005	29.30	0.006	40.10	0.002
8.30	0.008	19.10	0.005	29.90	0.005	40.70	0.002
8.90	0.009	19.70	0.005	30.50	0.005	41.30	0.002
9.50	0.011	20.30	0.005	31.10	0.004	41.90	0.002
10.10	0.014	20.90	0.004	31.70	0.004		
10.70	0.018	21.50	0.004	32.30	0.004	*...End*	
11.30	0.031	22.10	0.004	32.90	0.004		
11.90	0.077	22.70	0.004	33.50	0.004		

Hydrograph Report

Hyd. No. 9

Post Development - Uncontrolled Area

Hydrograph type	= Combine	Peak discharge	= 0.387 cfs
Storm frequency	= 100 yrs	Time to peak	= 12.20 hrs
Time interval	= 6 min	Hyd. volume	= 3,487 cuft
Inflow hyds.	= 7, 8	Contrib. drain. area	= 0.232 ac

Hydrograph Discharge Table

(Printed values >= 1.00% of Qp. Print interval = 6)

Time (hrs)	Hyd. 7 + (cfs)	Hyd. 8 = (cfs)	Outflow (cfs)
3.60	0.000	0.004	0.004
4.20	0.000	0.004	0.004
4.80	0.000	0.005	0.005
5.40	0.000	0.005	0.005
6.00	0.000	0.005	0.005
6.60	0.000	0.006	0.006
7.20	0.000	0.007	0.007
7.80	0.000	0.007	0.007
8.40	0.000	0.008	0.008
9.00	0.000	0.009	0.009
9.60	0.000	0.012	0.012
10.20	0.000	0.014	0.014
10.80	0.000	0.020	0.020
11.40	0.000	0.034	0.034
12.00	0.031	0.112	0.143
12.60	0.081	0.057	0.138
13.20	0.046	0.027	0.073
13.80	0.031	0.017	0.047
14.40	0.026	0.014	0.040
15.00	0.021	0.011	0.032
15.60	0.018	0.009	0.027

Continues on next page...

Hydrograph Discharge Table

Time (hrs)	Hyd. 7 + (cfs)	Hyd. 8 = (cfs)	Outflow (cfs)
16.20	0.017	0.008	0.025
16.80	0.016	0.007	0.023
17.40	0.014	0.007	0.021
18.00	0.013	0.006	0.018
18.60	0.012	0.005	0.017
19.20	0.011	0.005	0.016
19.80	0.011	0.005	0.016
20.40	0.011	0.005	0.015
21.00	0.010	0.004	0.015
21.60	0.010	0.004	0.014
22.20	0.010	0.004	0.014
22.80	0.009	0.004	0.013
23.40	0.009	0.004	0.012
24.00	0.008	0.003	0.012
24.60	0.059	0.046	0.105
25.20	0.035	0.023	0.059
25.80	0.027	0.017	0.044
26.40	0.021	0.012	0.034
27.00	0.017	0.010	0.027
27.60	0.015	0.008	0.023
28.20	0.014	0.007	0.021
28.80	0.013	0.007	0.019
29.40	0.011	0.006	0.017
30.00	0.010	0.005	0.015
30.60	0.009	0.005	0.014
31.20	0.009	0.004	0.014
31.80	0.009	0.004	0.013

Continues on next page...

Hydrograph Discharge Table

Time (hrs)	Hyd. 7 + (cfs)	Hyd. 8 = (cfs)	Outflow (cfs)
32.40	0.008	0.004	0.012
33.00	0.008	0.004	0.012
33.60	0.008	0.004	0.011
34.20	0.007	0.003	0.011
34.80	0.007	0.003	0.010
35.40	0.007	0.003	0.010
36.00	0.006	0.003	0.009
36.60	0.006	0.003	0.009
37.20	0.006	0.003	0.008
37.80	0.006	0.003	0.008
38.40	0.006	0.003	0.008
39.00	0.006	0.002	0.008
39.60	0.006	0.002	0.008
40.20	0.005	0.002	0.008
40.80	0.005	0.002	0.008
41.40	0.005	0.002	0.007
42.00	0.005	0.002	0.007
42.60	0.005	0.002	0.007
43.20	0.005	0.002	0.007
43.80	0.005	0.002	0.007
44.40	0.005	0.002	0.007
45.00	0.005	0.002	0.007
45.60	0.005	0.002	0.006
46.20	0.004	0.002	0.006
46.80	0.004	0.002	0.006
47.40	0.004	0.002	0.006
48.00	0.004	0.002	0.006

Continues on next page...

...End

Hydrograph Report

Hyd. No. 11

Post Dev Controlled - Imp (Roof 1)

Hydrograph type	= SCS Runoff	Peak discharge	= 0.275 cfs
Storm frequency	= 100 yrs	Time to peak	= 12.20 hrs
Time interval	= 6 min	Hyd. volume	= 2,021 cuft
Drainage area	= 0.047 ac	Curve number	= 98.000
Basin Slope	= 0.0 %	Hydraulic length	= 0 ft
Tc method	= User	Time of conc. (Tc)	= 10.0 min
Total precip.	= 8.78 in	Distribution	= Custom
Storm duration	= G:\Users\A Castelli\DUSH\Type 2 Distribution.cds	Shape factor	= 484

Hydrograph Discharge Table

(Printed values >= 1.00% of Qp. Print interval = 6)

Time (hrs)	Outflow (cfs)	Time (hrs)	Outflow (cfs)	Time (hrs)	Outflow (cfs)	Time (hrs)	Outflow (cfs)
1.70	0.003	12.50	0.090	23.30	0.005	34.10	0.004
2.30	0.004	13.10	0.038	23.90	0.004	34.70	0.004
2.90	0.004	13.70	0.022	24.50	0.084	35.30	0.004
3.50	0.005	14.30	0.018	25.10	0.034	35.90	0.004
4.10	0.005	14.90	0.014	25.70	0.022	36.50	0.003
4.70	0.006	15.50	0.012	26.30	0.016	37.10	0.003
5.30	0.006	16.10	0.011	26.90	0.013	37.70	0.003
5.90	0.006	16.70	0.009	27.50	0.010	38.30	0.003
6.50	0.007	17.30	0.008	28.10	0.009	38.90	0.003
7.10	0.008	17.90	0.007	28.70	0.008	39.50	0.003
7.70	0.009	18.50	0.007	29.30	0.008	40.10	0.003
8.30	0.010	19.10	0.006	29.90	0.007	40.70	0.003
8.90	0.011	19.70	0.006	30.50	0.006	41.30	0.003
9.50	0.014	20.30	0.006	31.10	0.006	41.90	0.003
10.10	0.018	20.90	0.006	31.70	0.005		
10.70	0.023	21.50	0.005	32.30	0.005	*...End*	
11.30	0.039	22.10	0.005	32.90	0.005		
11.90	0.098	22.70	0.005	33.50	0.005		

Hydrograph Report

Hyd. No. 12

Underground Chamber 1

Hydrograph type	= Reservoir	Peak discharge	= 0.113 cfs
Storm frequency	= 100 yrs	Time to peak	= 12.50 hrs
Time interval	= 6 min	Hyd. volume	= 112 cuft
Inflow hyd. No.	= 11 - Post Dev Controlled Runoff (Roof)	Reservoir name	= Stormtech SC-740
Max. Elevation	= 130.26 ft	Max. Storage	= 500 cuft

Storage Indication method used. Exfiltration extracted from Outflow.

Hydrograph Discharge Table

(Printed values >= 1.00% of Qp. Print interval = 6)

Time (hrs)	Inflow cfs	Elevation ft	Clv A cfs	Clv B cfs	Clv C cfs	PfRsr cfs	Wr A cfs	Wr B cfs	Wr C cfs	Wr D cfs	Exfil cfs	Outflow cfs
12.60	0.072	130.19	-----	0.035	-----	-----	-----	-----	-----	-----	0.025	0.035
13.20	0.034	130.15	-----	0.011	-----	-----	-----	-----	-----	-----	0.025	0.011

...End

Hydrograph Report

Hyd. No. 14

Post Dev Controlled - Imp (Roof 2)

Hydrograph type	= SCS Runoff	Peak discharge	= 0.169 cfs
Storm frequency	= 100 yrs	Time to peak	= 12.20 hrs
Time interval	= 6 min	Hyd. volume	= 1,247 cuft
Drainage area	= 0.029 ac	Curve number	= 98.000
Basin Slope	= 0.0 %	Hydraulic length	= 0 ft
Tc method	= User	Time of conc. (Tc)	= 10.0 min
Total precip.	= 8.78 in	Distribution	= Custom
Storm duration	= G:\Users\A Castelli\DUSH\Type 2 Distribution.cds	Shape factor	= 484

Hydrograph Discharge Table

(Printed values >= 1.00% of Qp. Print interval = 6)

Time (hrs)	Outflow (cfs)	Time (hrs)	Outflow (cfs)	Time (hrs)	Outflow (cfs)	Time (hrs)	Outflow (cfs)
1.70	0.002	12.50	0.055	23.30	0.003	34.10	0.003
2.30	0.002	13.10	0.023	23.90	0.003	34.70	0.003
2.90	0.003	13.70	0.014	24.50	0.052	35.30	0.002
3.50	0.003	14.30	0.011	25.10	0.021	35.90	0.002
4.10	0.003	14.90	0.009	25.70	0.014	36.50	0.002
4.70	0.004	15.50	0.007	26.30	0.010	37.10	0.002
5.30	0.004	16.10	0.007	26.90	0.008	37.70	0.002
5.90	0.004	16.70	0.006	27.50	0.006	38.30	0.002
6.50	0.004	17.30	0.005	28.10	0.006	38.90	0.002
7.10	0.005	17.90	0.005	28.70	0.005	39.50	0.002
7.70	0.006	18.50	0.004	29.30	0.005	40.10	0.002
8.30	0.006	19.10	0.004	29.90	0.004	40.70	0.002
8.90	0.007	19.70	0.004	30.50	0.004	41.30	0.002
9.50	0.009	20.30	0.004	31.10	0.003	41.90	0.002
10.10	0.011	20.90	0.003	31.70	0.003		
10.70	0.014	21.50	0.003	32.30	0.003	*...End*	
11.30	0.024	22.10	0.003	32.90	0.003		
11.90	0.060	22.70	0.003	33.50	0.003		

Hydrograph Report

Hyd. No. 15

Underground Chamber 2

Hydrograph type	= Reservoir	Peak discharge	= 0.146 cfs
Storm frequency	= 100 yrs	Time to peak	= 12.40 hrs
Time interval	= 6 min	Hyd. volume	= 111 cuft
Inflow hyd. No.	= 14 - Post Dev Controlled Runoff (Roof 2)	Reservoir name	= Stormtech SC-740
Max. Elevation	= 130.29 ft	Max. Storage	= 281 cuft

Storage Indication method used. Exfiltration extracted from Outflow.

Hydrograph Discharge Table

(Printed values >= 1.00% of Qp. Print interval = 6)

Time (hrs)	Inflow cfs	Elevation ft	Clv A cfs	Clv B cfs	Clv C cfs	PfRsr cfs	Wr A cfs	Wr B cfs	Wr C cfs	Wr D cfs	Exfil cfs	Outflow cfs
12.60	0.044	130.20	-----	0.046	-----	-----	-----	-----	-----	-----	0.014	0.046
13.20	0.021	130.14	-----	0.008	-----	-----	-----	-----	-----	-----	0.014	0.008

...End

Hydrograph Report

Hyd. No. 17

Total Discharge

Hydrograph type	= Combine	Peak discharge	= 0.400 cfs
Storm frequency	= 100 yrs	Time to peak	= 12.40 hrs
Time interval	= 6 min	Hyd. volume	= 3,711 cuft
Inflow hyds.	= 9, 12, 15	Contrib. drain. area	= 0.000 ac

Hydrograph Discharge Table

(Printed values >= 1.00% of Qp. Print interval = 6)

Time (hrs)	Hyd. 9 + (cfs)	Hyd. 12 + (cfs)	Hyd. 15 + (cfs)	Outflow (cfs)
4.20	0.004	0.000	0.000	0.004
4.80	0.005	0.000	0.000	0.005
5.40	0.005	0.000	0.000	0.005
6.00	0.005	0.000	0.000	0.005
6.60	0.006	0.000	0.000	0.006
7.20	0.007	0.000	0.000	0.007
7.80	0.007	0.000	0.000	0.007
8.40	0.008	0.000	0.000	0.008
9.00	0.009	0.000	0.000	0.009
9.60	0.012	0.000	0.000	0.012
10.20	0.014	0.000	0.000	0.014
10.80	0.020	0.000	0.000	0.020
11.40	0.034	0.000	0.000	0.034
12.00	0.143	0.000	0.000	0.143
12.60	0.138	0.035	0.046	0.219
13.20	0.073	0.011	0.008	0.092
13.80	0.047	0.000	0.001	0.048
14.40	0.040	0.000	0.000	0.040
15.00	0.032	0.000	0.000	0.032
15.60	0.027	0.000	0.000	0.027
16.20	0.025	0.000	0.000	0.025

Continues on next page...

Hydrograph Discharge Table

Time (hrs)	Hyd. 9 + (cfs)	Hyd. 12 + (cfs)	Hyd. 15 + (cfs)	Outflow (cfs)
16.80	0.023	0.000	0.000	0.023
17.40	0.021	0.000	0.000	0.021
18.00	0.018	0.000	0.000	0.018
18.60	0.017	0.000	0.000	0.017
19.20	0.016	0.000	0.000	0.016
19.80	0.016	0.000	0.000	0.016
20.40	0.015	0.000	0.000	0.015
21.00	0.015	0.000	0.000	0.015
21.60	0.014	0.000	0.000	0.014
22.20	0.014	0.000	0.000	0.014
22.80	0.013	0.000	0.000	0.013
23.40	0.012	0.000	0.000	0.012
24.00	0.012	0.000	0.000	0.012
24.60	0.105	0.000	0.000	0.105
25.20	0.059	0.000	0.000	0.059
25.80	0.044	0.000	0.000	0.044
26.40	0.034	0.000	0.000	0.034
27.00	0.027	0.000	0.000	0.027
27.60	0.023	0.000	0.000	0.023
28.20	0.021	0.000	0.000	0.021
28.80	0.019	0.000	0.000	0.019
29.40	0.017	0.000	0.000	0.017
30.00	0.015	0.000	0.000	0.015
30.60	0.014	0.000	0.000	0.014
31.20	0.014	0.000	0.000	0.014
31.80	0.013	0.000	0.000	0.013
32.40	0.012	0.000	0.000	0.012

Continues on next page...

Hydrograph Discharge Table

Time (hrs)	Hyd. 9 + (cfs)	Hyd. 12 + (cfs)	Hyd. 15 + (cfs)	Outflow (cfs)
33.00	0.012	0.000	0.000	0.012
33.60	0.011	0.000	0.000	0.011
34.20	0.011	0.000	0.000	0.011
34.80	0.010	0.000	0.000	0.010
35.40	0.010	0.000	0.000	0.010
36.00	0.009	0.000	0.000	0.009
36.60	0.009	0.000	0.000	0.009
37.20	0.008	0.000	0.000	0.008
37.80	0.008	0.000	0.000	0.008
38.40	0.008	0.000	0.000	0.008
39.00	0.008	0.000	0.000	0.008
39.60	0.008	0.000	0.000	0.008
40.20	0.008	0.000	0.000	0.008
40.80	0.008	0.000	0.000	0.008
41.40	0.007	0.000	0.000	0.007
42.00	0.007	0.000	0.000	0.007
42.60	0.007	0.000	0.000	0.007
43.20	0.007	0.000	0.000	0.007
43.80	0.007	0.000	0.000	0.007
44.40	0.007	0.000	0.000	0.007
45.00	0.007	0.000	0.000	0.007
45.60	0.006	0.000	0.000	0.006
46.20	0.006	0.000	0.000	0.006
46.80	0.006	0.000	0.000	0.006
47.40	0.006	0.000	0.000	0.006
48.00	0.006	0.000	0.000	0.006

...End

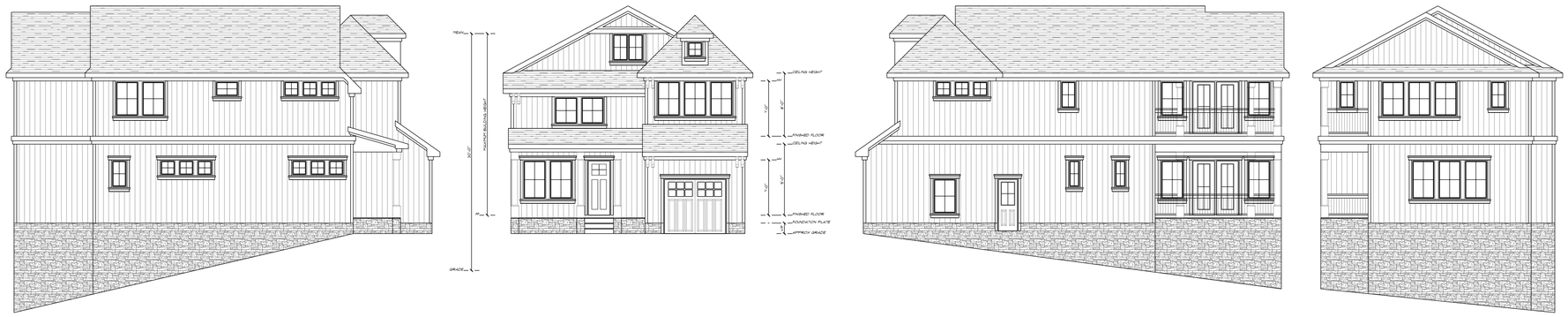

ELEVATION
SCALE: 1/8" = 1'-0"

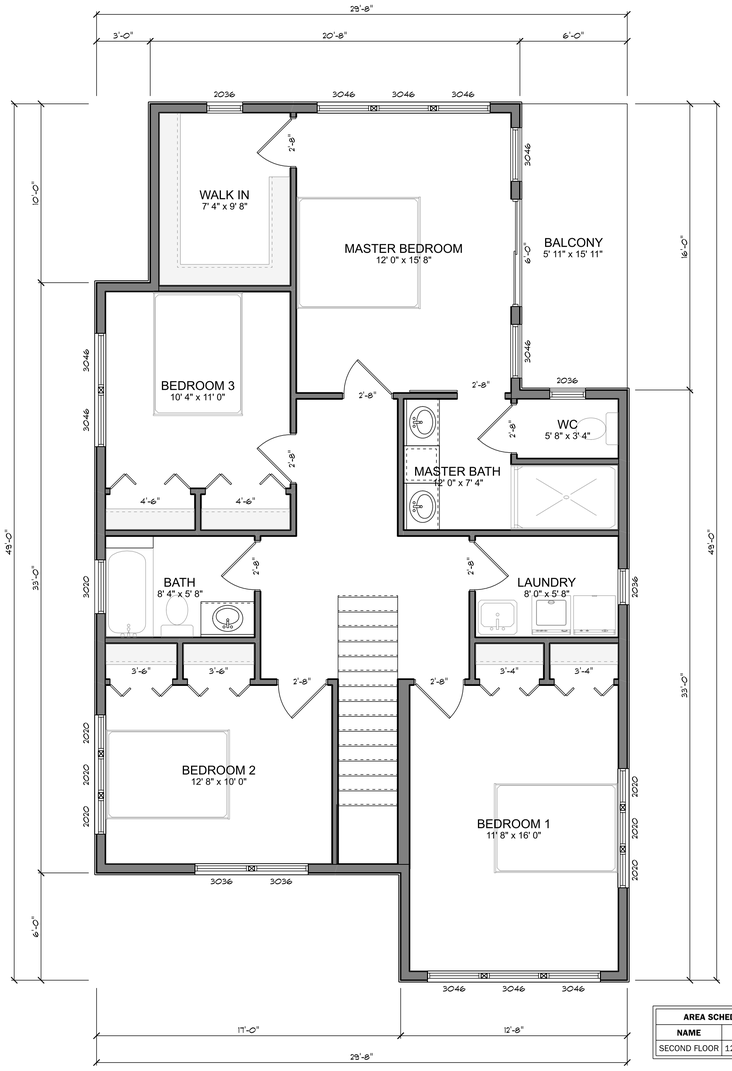

AREA SCHEDULE	
NAME	AREA
SECOND FLOOR	1225.7 sq ft.

PROPOSED SECOND FLOOR
SCALE: 1/4" = 1'-0"

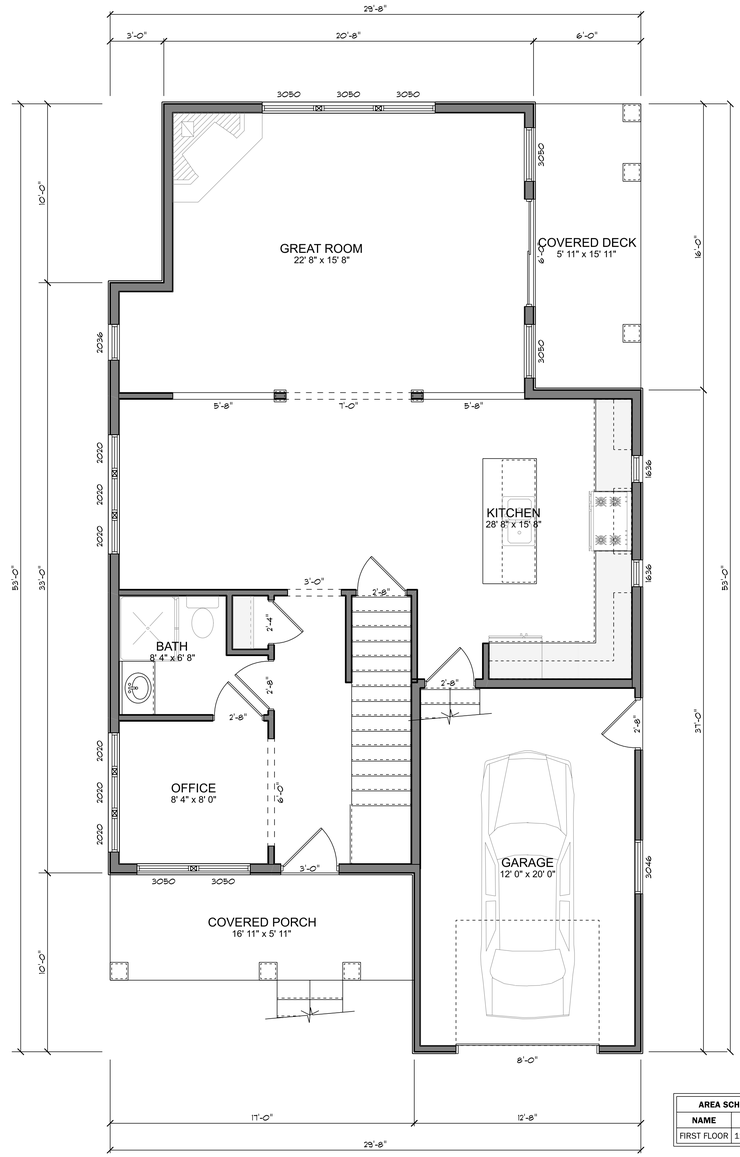

AREA SCHEDULE	
NAME	AREA
FIRST FLOOR	1276.3 sq ft.

PROPOSED FIRST FLOOR
SCALE: 1/4" = 1'-0"

Item 5.

NEW JERSEY
LICENSE No. 0609-8200
BRIAN BERZINSKIS
REGISTERED ARCHITECT
COPYRIGHT 2024

PROJECT FOR:
14 NORTH PEAK STREET
Block: 35
Lot: 9
HIGHLANDS
NEW JERSEY
Project Number
CN#021-09-022

DATE	BY
8/27/2024	BB

Grasso Design Group
231 Highway 71
Contact: 732-528-5850
Manasquan
http://www.grassodg.com
New Jersey
design@grassodg.com

A-1
SHEET
TOTAL
1

205

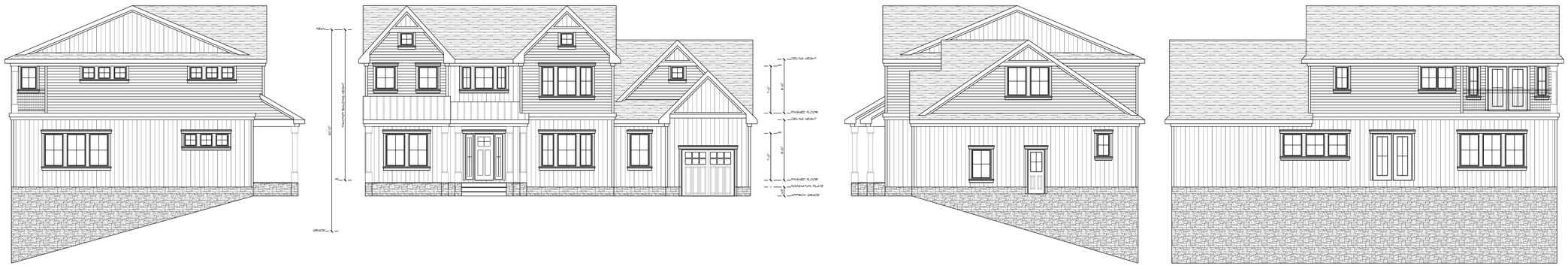

ELEVATION
SCALE: 1/8" = 1'-0"

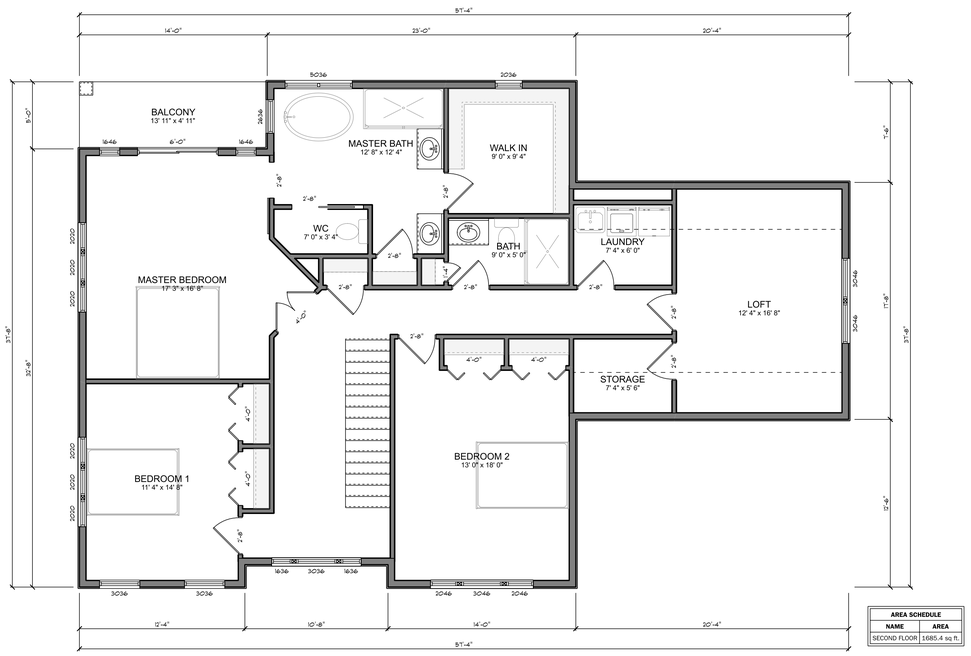

AREA SCHEDULE	
NAME	AREA
SECOND FLOOR	1685.4 sq ft.

PROPOSED SECOND FLOOR
SCALE: 3/16" = 1'-0"

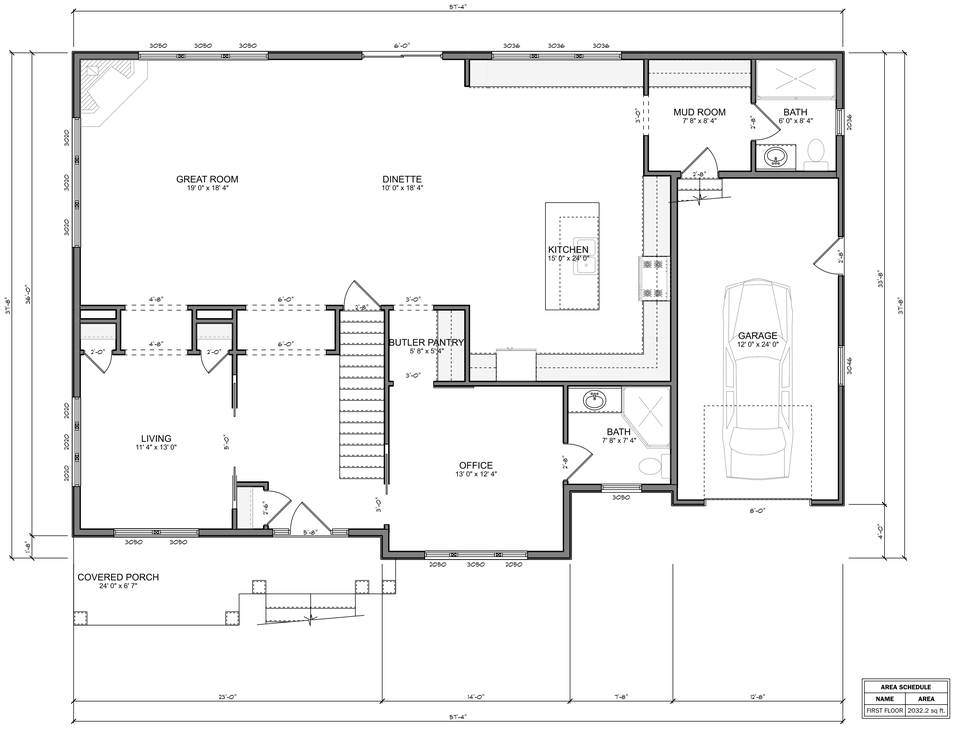

AREA SCHEDULE	
NAME	AREA
FIRST FLOOR	2032.2 sq ft.

PROPOSED FIRST FLOOR
SCALE: 3/16" = 1'-0"

PROJECT FOR:

32 NORTH PEAK STREET

Block: 35
Lot: 8

HIGHLANDS
NEW JERSEY

Project Number
CN#021-09-021

DATE	BY
8/27/2024	BB

Grasso Design Group
231 Highway 71
Contact: 732-528-5850
Manasquan
http://www.grassodg.com
New Jersey
design@grassodg.com

A-1
SHEET
TOTAL
1

206

Item 5.

NPCA
CERTIFIED PLANT

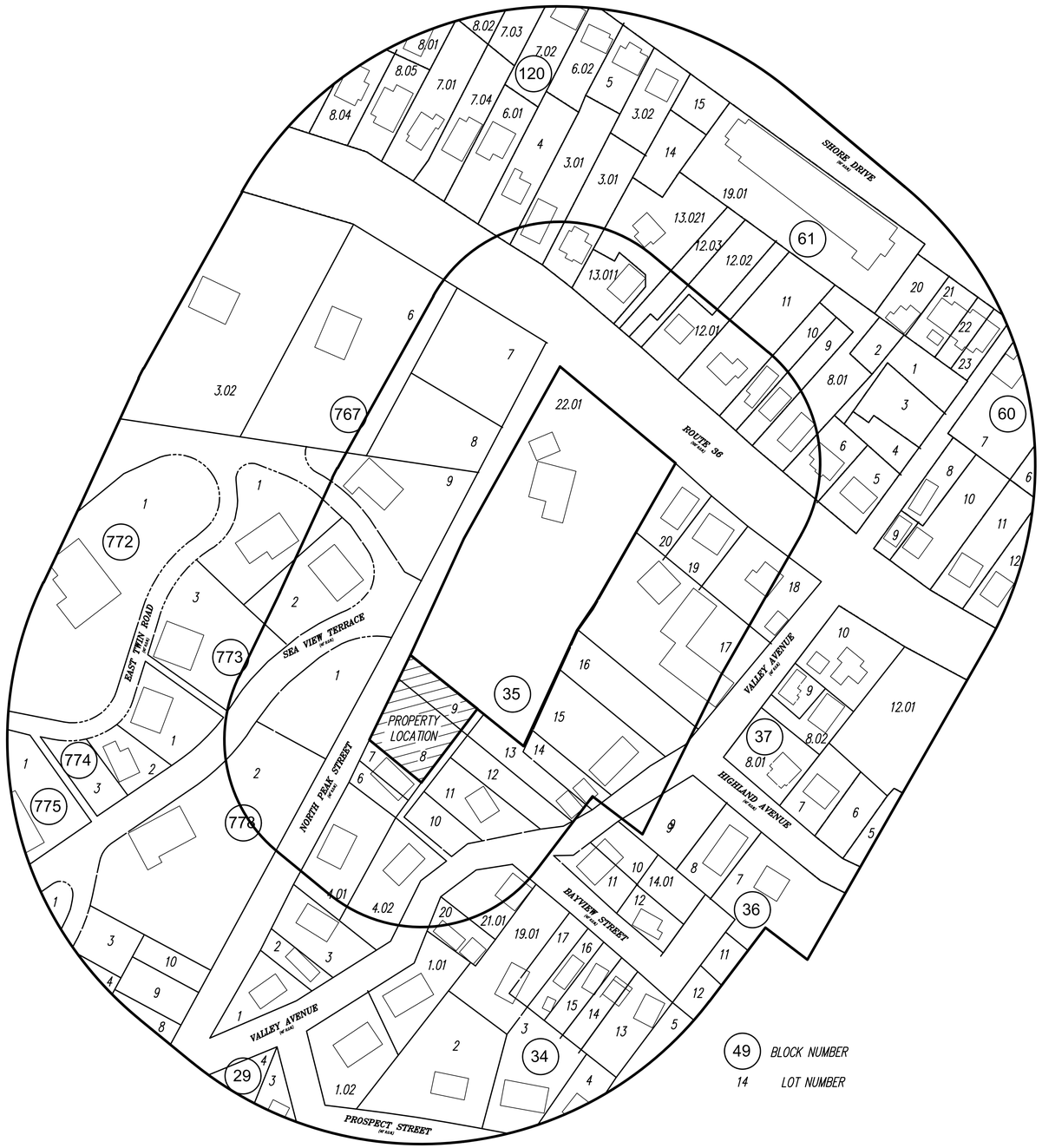

SCALE: 1"=150'

0 150 300 600 ft.

STONE STRONG SYSTEM - GRAVITY RETAINING WALL

PREPARED FOR

HOME & LAND DEVELOPMENT

NORTH PEAK STREET PROJECT

INDEX:

1. COVER PAGE
2. STONE STRONG WALL ELEVATIONS
3. STONE STRONG WALL OVERLAY AND QTY.
4. STONE STRONG WALL SECTIONS
5. STONE STRONG STANDARD DETAILS
6. STONE STRING BLOCK REFERENCE
7. NOTES

GARDEN STATE PRECAST
P.O. BOX 702
FARMINGDALE, NJ 07727
732-938-4436
732-938-7096 - FAX

NUMBER	BY	DATE
1	AC	8/29/24

REVISIONS

Garden State PRECAST INC

NPCA CERTIFIED PLANT

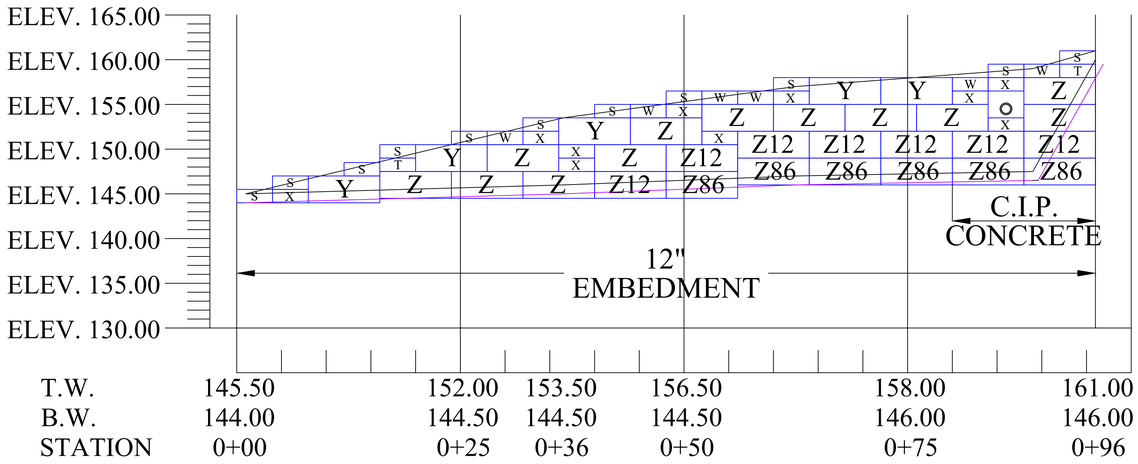

NORTH PEAK STREET WALL

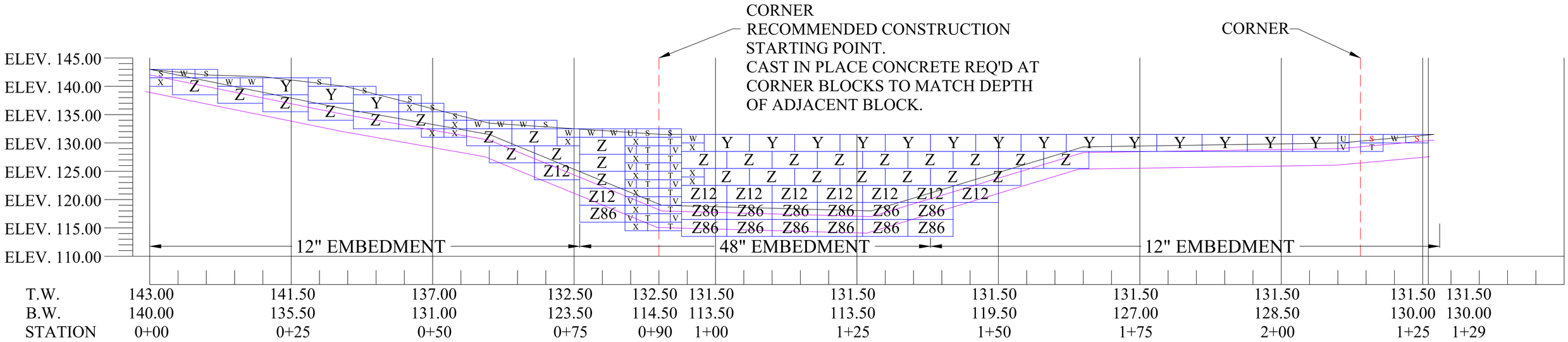

REAR WALL

Garden State PRECAST INC

STONE STRONG WALL ELEVATIONS

SCALE 1:10

STONE STRONG SYSTEM - GRAVITY RETAINING WALL

HOME & LAND DEVELOPMENT
NORTH PEAK STREET

GARDEN STATE PRECAST
P.O. BOX 702
FARMINGDALE, NJ 07727
732-938-4436
732-938-7096 - FAX

NUMBER	BY	DATE
1	AC	8/29/24

REVISIONS

NPCA CERTIFIED PLANT

NORTH PEAK STREET WALL

BLOCK TYPE	BLOCK SQ. FT.	QUANTITY	TOTAL SQ. FT.
S	9	11	99
T	9	2	18
U	3	0	0
V	3	0	0
W	6	6	36
X	6	10	60
Y	24	5	120
Z	24	12	288
Z12	24	7	168
Z86	24	6	144
	TOTAL	59	933

REAR WALL

BLOCK TYPE	BLOCK SQ. FT.	QUANTITY	TOTAL SQ. FT.
S	9	12	108
T	9	12	108
U	3	2	6
V	3	11	33
W	6	11	66
X	6	15	90
Y	24	17	408
Z	24	29	696
Z12	24	9	216
Z86	24	13	312
	TOTAL	131	2043

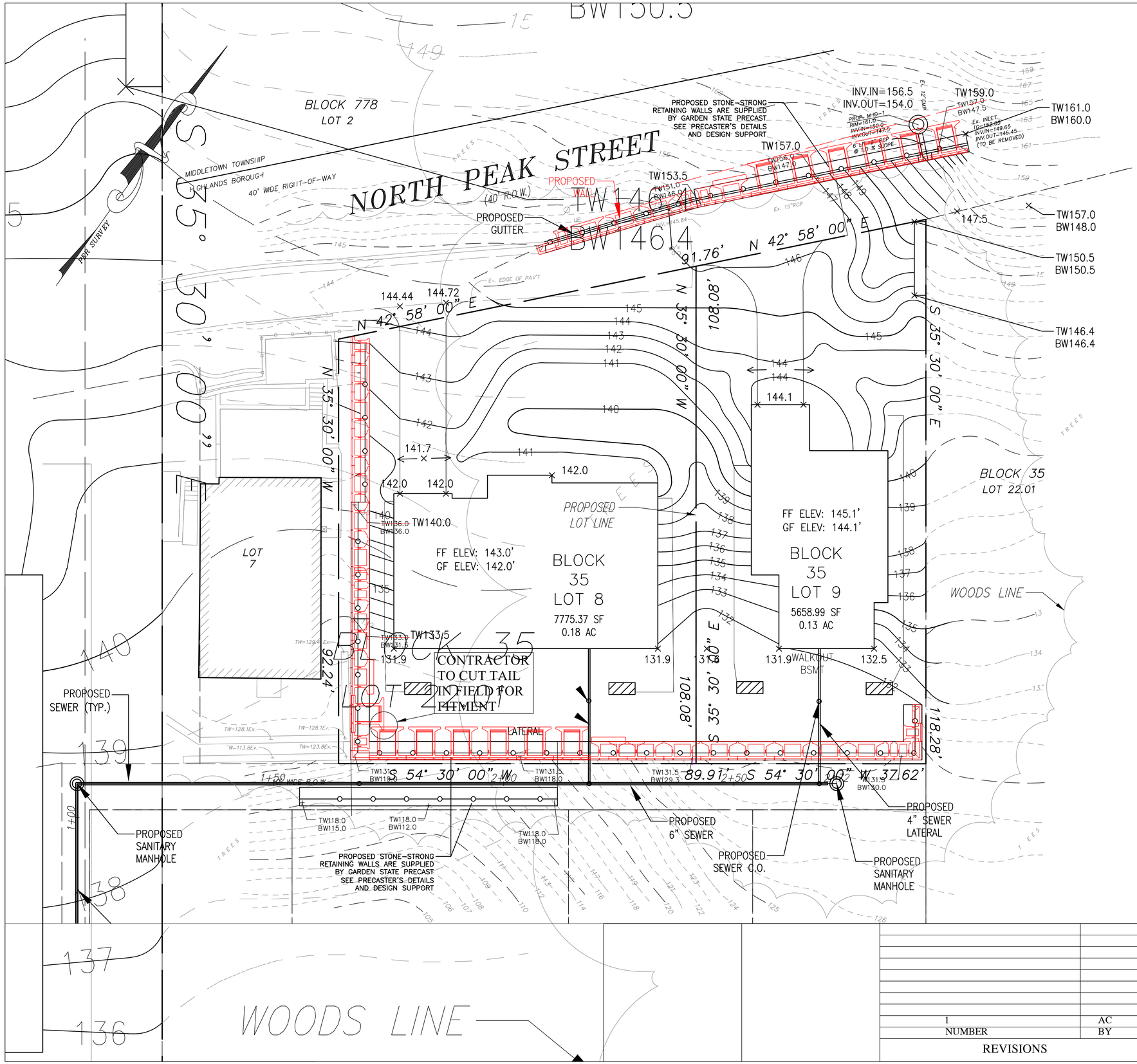

SCALE 1:10

NUMBER	BY	DATE
1	AC	8/29/24

REVISIONS

Garden State PRECAST INC

STONE STRONG WALL OVERLAY AND QTY.

STONE STRONG SYSTEM - GRAVITY RETAINING WALL

HOME & LAND DEVELOPMENT
NORTH PEAK STREET

GARDEN STATE PRECAST
P.O. BOX 702
FARMINGDALE, NJ 07727
732-938-4436
732-938-7096 - FAX

NPCA CERTIFIED PLANT

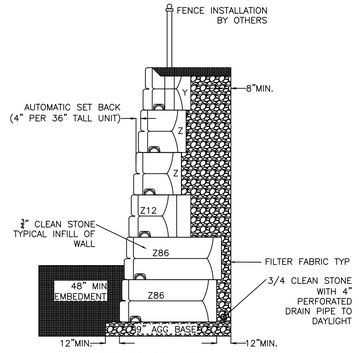

18.0 VF GRAVITY WALL
CROSS SECTION

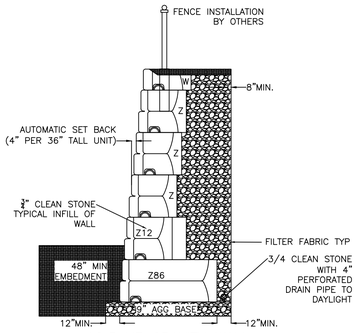

16.5 VF GRAVITY WALL
CROSS SECTION

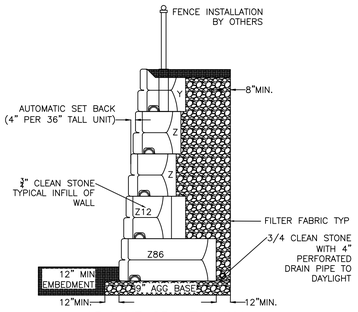

15.0 VF GRAVITY WALL
CROSS SECTION

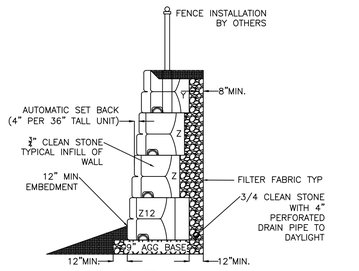

12.0 VF GRAVITY WALL
CROSS SECTION

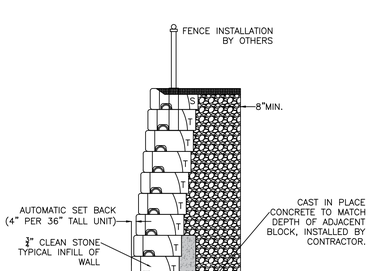

12.0 VF GRAVITY WALL
CROSS SECTION

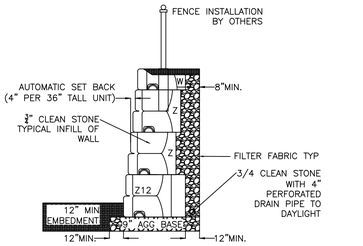

10.5 VF GRAVITY WALL
CROSS SECTION

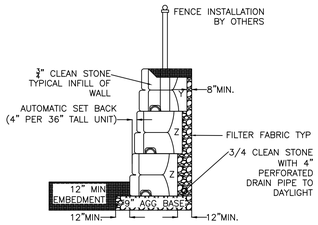

9.0 VF GRAVITY WALL
CROSS SECTION

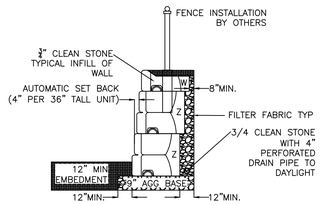

7.5 VF GRAVITY WALL
CROSS SECTION

7.5 VF GRAVITY WALL
CROSS SECTION

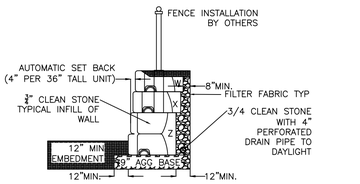

7.5 VF GRAVITY WALL
CROSS SECTION

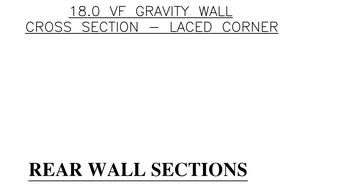

6.0 VF GRAVITY WALL
CROSS SECTION

18.0 VF GRAVITY WALL
CROSS SECTION – LACED CORNER

REAR WALL SECTIONS

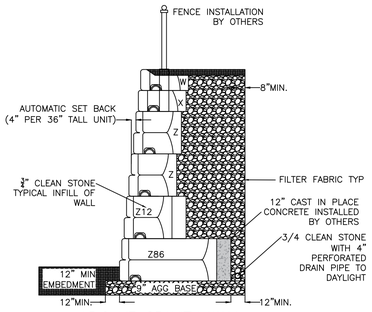

15.0 VF GRAVITY WALL
CROSS SECTION

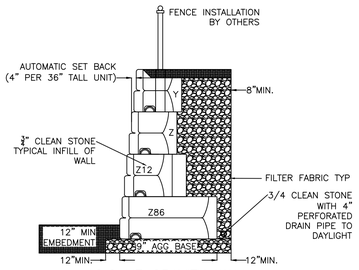

12.0 VF GRAVITY WALL
CROSS SECTION

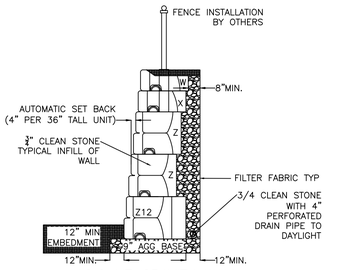

12.0 VF GRAVITY WALL
CROSS SECTION

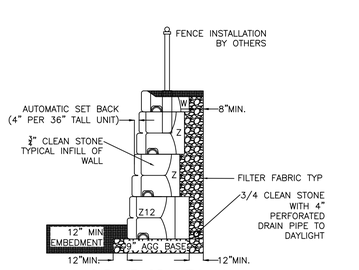

10.5 VF GRAVITY WALL
CROSS SECTION

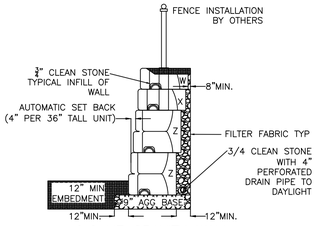

9.0 VF GRAVITY WALL
CROSS SECTION

NORTH PEAK STREET WALL SECTIONS

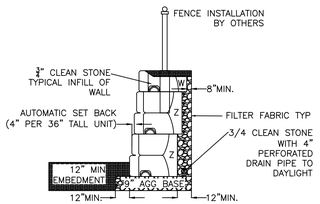

7.5 VF GRAVITY WALL
CROSS SECTION

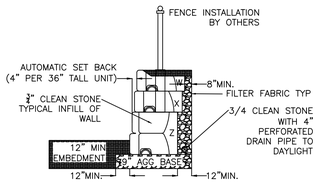

6.0 VF GRAVITY WALL
CROSS SECTION

NOT TO SCALE

NUMBER	BY	DATE
1	AC	8/29/24

REVISIONS

Garden State PRECAST INC

STONE STRONG WALL SECTIONS

STONE STRONG SYSTEM - GRAVITY RETAINING WALL

HOME & LAND DEVELOPMENT
NORTH PEAK STREET

GARDEN STATE PRECAST
P.O. BOX 702
FARMINGDALE, NJ 07727
732-938-4436
732-938-7096 - FAX

SHEET 4 OF 7

NPCA CERTIFIED PLANT

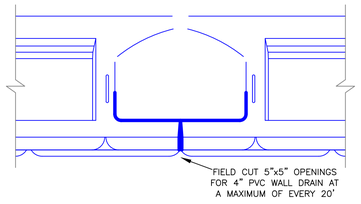

ALTERNATE DRAIN PIPE LOCATION WITH THROUGH WALL PENETRATION

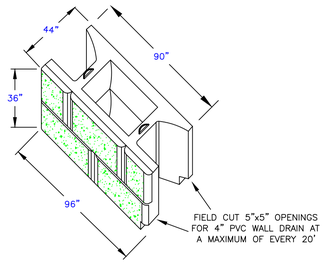

DRAIN PIPE BLOCK CUT OUT

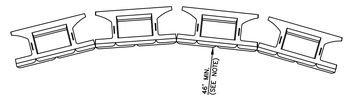

Minimum Concave Radius		
Wall Height (ft)	Total # of Courses	Reqd. Radius at Top Course
6	2	46' 4"
9	3	46' 8"
12	4	47' 0"
15	5	47' 4"
18	6	47' 8"
21	7	48' 0"
24	8	48' 4"

NOTE:
MINIMUM RADIUS OCCURS AT LOWEST COURSE.
RADIUS INCREASES 4" PER COURSE ABOVE,
AS SHOWN ON TABLE.

MINIMUM CONCAVE RADIUS–24SF UNITS
NOT TO SCALE

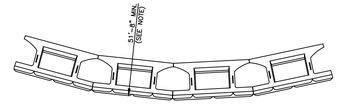

Minimum Convex Radius		
Wall Height (ft)	Total # of Courses	Reqd. Radius at First Course
6	2	52' 0"
9	3	52' 4"
12	4	52' 8"
15	5	53' 0"
18	6	53' 4"
21	7	53' 8"
24	8	54' 0"

NOTE:
MINIMUM RADIUS OCCURS AT TOP COURSE.
REQUIRED RADIUS INCREASES 4" PER COURSE
BELOW, AS SHOWN ON TABLE.

MINIMUM CONVEX RADIUS–24SF UNITS
NOT TO SCALE

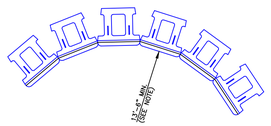

Minimum Concave Radius		
Wall Height (ft)	Total # of Courses	Reqd. Radius at Top Course
3	2	13' 8"
4 1/2	3	13' 10"
6	4	14' 0"
7 1/2	5	14' 2"
9	6	14'-4"
10 1/2	7	14' 6"
12	8	14' 8"

NOTE:
MINIMUM RADIUS OCCURS AT LOWEST COURSE.
RADIUS INCREASES 2" PER COURSE
ABOVE, AS SHOWN ON TABLE.

MINIMUM CONCAVE RADIUS–6SF UNITS
NOT TO SCALE

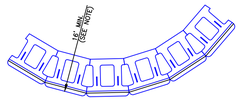

Minimum Convex Radius		
Wall Height (ft)	Total # of Courses	Reqd. Radius at First Course
3	2	16' 2"
4 1/2	3	16' 4"
6	4	16' 6"
7 1/2	5	16' 8"
9	6	16' 10"
10 1/2	7	17' 0"
12	8	17' 2"

NOTE:
NOTE: MINIMUM RADIUS OCCURS AT TOP COURSE.
REQUIRED RADIUS INCREASES 2" PER COURSE
BELOW, AS SHOWN ON TABLE.

MINIMUM CONVEX RADIUS–6SF UNITS
NOT TO SCALE

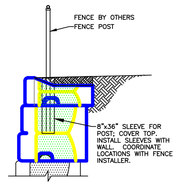

FENCE SLEEVE
NOT TO SCALE

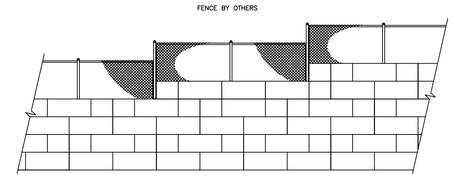

TYPICAL FENCE CONFIGURATION
NOT TO SCALE

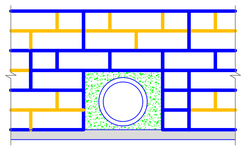

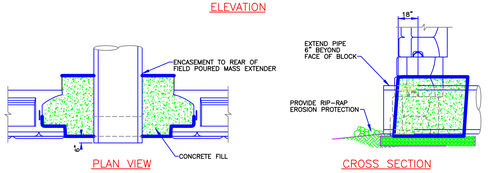

PIPE PENETRATION DETAIL
NOT TO SCALE

NOTE: USE REINFORCED CONNECTION ON CONVEX CURVES WHERE GAP BETWEEN TAILS IS REDUCED.

3,000 PSI CONCRETE AT 28 DAYS FOR CAST IN PLACE EXTENSIONS
(DESIGN BY CONTRACTOR SUBMITTED UNDER SEPERATE CUVER)

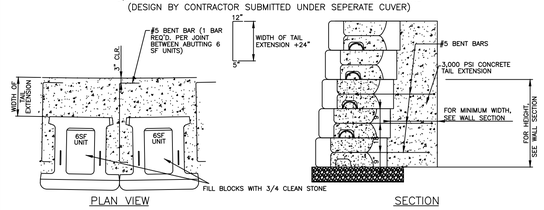

REINFORCED CONNECTION FOR 6SF UNITS
NOT TO SCALE

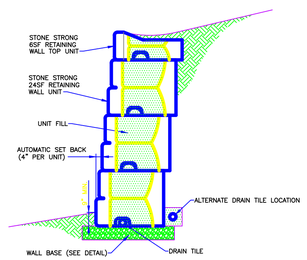

NOTES:
1. DRAIN TILE MAY BE ELIMINATED AT THE DISCRETION OF THE SITE ENGINEER.
2. DAYLIGHT DRAIN TILE AT LOW POINTS THROUGH WALL FACE OR AT ENDS; MAXIMUM SPACING 100 FEET OR PER SITE CONDITIONS.

TYPICAL GRAVITY WALL CROSS SECTION
NOT TO SCALE

DISCLAIMER:
These typical details are preliminary and conceptual in nature. They are provided for general information purposes only. Anyone making use of these details and related information does so at their own risk and disclaims all liability for such use. Site specific design should be performed by a licensed Professional Engineer based on actual site conditions, materials, and local practices.

Stone Strong LLC retains al common law, statutory, and other reserved rights to these drawings including the copyright. Limited license is granted to copy, reproduce, or modify the details to prepare construction drawings for Stone Strong retaining walls. Stone Strong LLC makes no warranties, either expressed or implied, of merchantability or fitness for any particular purpose, and accepts no responsibility for the accuracy, suitability, or completeness of information contained herein.

NOT TO SCALE

1	AC	8/29/24
NUMBER	BY	DATE

REVISIONS

STONE STRONG WALL STANDARD DETAILS

STONE STRONG SYSTEM - GRAVITY RETAINING WALL

HOME & LAND DEVELOPMENT
NORTH PEAK STREET

GARDEN STATE PRECAST
P.O. BOX 702
FARMINGDALE, NJ 07727
732-938-4436
732-938-7096 - FAX

Garden State PRECAST INC

NPCA CERTIFIED PLANT

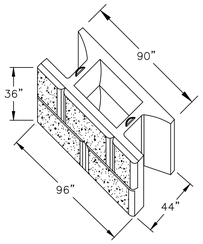

STONE STRONG
(Z)24 SF UNIT

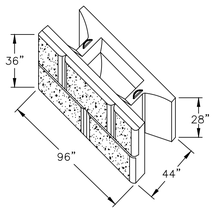

STONE STRONG
(Y)24 SF TOP UNIT

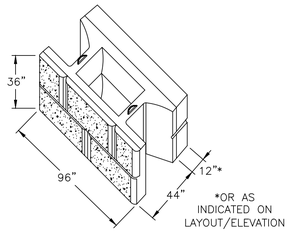

STONE STRONG
(Z12) 24 SF MASS EXTENDER UNIT

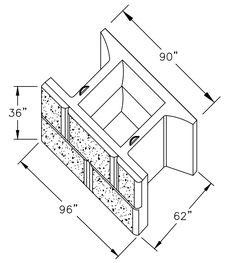

STONE STRONG
(Z62) 24 SF – 62 UNIT

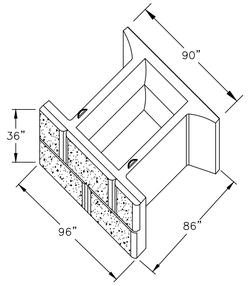

STONE STRONG
(Z86)24 SF – 86 UNIT

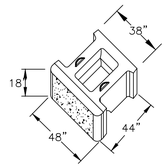

STONE STRONG
(X)6 SF UNIT

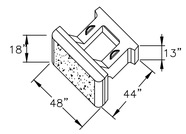

STONE STRONG
(W)6 SF TOP UNIT

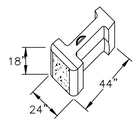

STONE STRONG
(V)3 SF UNIT

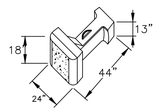

STONE STRONG
(U)3 SF TOP UNIT

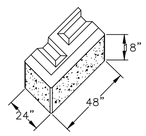

STONE STRONG
(T)END UNIT

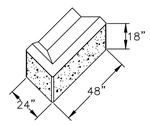

STONE STRONG
(S) TOP END UNIT

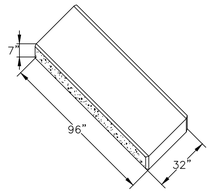

STONE STRONG
(P)CAP STEP BLOCK

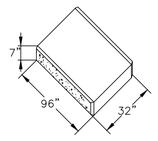

STONE STRONG
(P5)CAP STEP HALF BLOCK

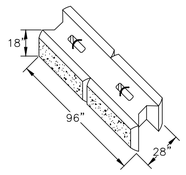

STONE STRONG
(Q)DUAL FACE UNIT

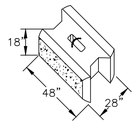

STONE STRONG
(Q5)DUAL FACE HALF UNIT

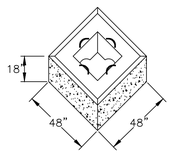

STONE STRONG
(C)90° CORNER UNIT

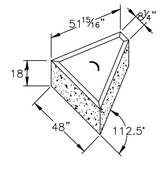

STONE STRONG
(R)45° CORNER UNIT

COMPONENT DATA

COMPONENT	BLOCK WEIGHT	CONCRETE VOLUME	ROCK IN-FILL
24 SF(Z)	6000 LB	1.50 CU YARDS	1.70 CU YARDS
24 SF TOP(Y)	5,400 LB	1.35 CU YARDS	1.50 CU YARDS
24 SF MASS EXTENDER(Z12)	10,000 LB	2.5 CU YARDS	1.70 CU YARDS
24 SF -62 UNIT(Z62)	6,600 LB	1.65 CU YARDS	2.81 CU YARDS
24 SF -86 UNIT(Z86)	7,400 LB	1.85 CU YARDS	4.27 CU YARDS
6 SF(X)	1,600 LB	0.37 CU YARDS	0.33 CU YARDS
6 SF TOP (W)	1,400 LB	0.35 CU YARDS	0.31 CU YARDS
3 SF(V)	800 LB	0.20 CU YARDS	0.17 CU YARDS
3 SF TOP(U)	720 LB	0.18 CU YARDS	0.16 CU YARDS
END UNIT(T)	1,500 LB	0.37 CU YARDS	0.00 CU YARDS
END UNIT TOP(S)	1,412 LB	0.35 CU YARDS	0.00 CU YARDS
CAP/STEP UNIT(P)	1,600 LB	0.40 CU YARDS	0.00 CU YARDS
CAP/STEP HALF UNIT(P5)	800 LB	0.20 CU YARDS	0.00 CU YARDS
DUAL FACE UNIT(Q)	3,520 LB	0.88 CU YARDS	0.00 CU YARDS
DUAL FACE HALF UNIT(Q5)	1,760 LB	0.44 CU YARDS	0.00 CU YARDS
90 DEGREE CORNER UNIT(C)	2,600 LB	0.65 CU YARDS	0.10 CU YARDS
45 DEGREE CORNER UNIT(R)	2,000 LB	0.50 CU YARDS	0.00 CU YARDS

NOT TO SCALE

NUMBER	BY	DATE
I	AC	8/29/24

REVISIONS

BLOCK REFERENCE

STONE STRONG SYSTEM - GRAVITY RETAINING WALL

HOME & LAND DEVELOPMENT
NORTH PEAK STREET

GARDEN STATE PRECAST
P.O. BOX 702
FARMINGDALE, NJ 07727
732-938-4436
732-938-7096 - FAX

NPCA CERTIFIED PLANT

STONE STRONG SYSTEMS
SPECIFICATIONS FOR PRECAST MODULAR BLOCK RETAINING WALL SYSTEM

PART 1: GENERAL

1.01 DESCRIPTION

A. WORK INCLUDES FURNISHING AND INSTALLING PRECAST MODULAR BLOCKS (PMB) TO THE LINES AND GRADES SHOWN ON THE PLANS AND AS SPECIFIED HEREIN. ALSO INCLUDED IS FURNISHING AND INSTALLING APPURTENANT MATERIALS REQUIRED FOR CONSTRUCTION OF THE COMPLETE SYSTEM.

B. THE CONTRACTOR IS SOLELY RESPONSIBLE FOR SAFETY. THE ARCHITECT/ENGINEER AND OWNER SHALL NOT BE RESPONSIBLE FOR MEANS OR METHODS OF CONSTRUCTION OR FOR SAFETY OF WORKERS OR OF THE PUBLIC.

1.02 REFERENCES

A. ASTM C39 – STANDARD TEST METHOD FOR COMPRESSIVE STRENGTH OF CYLINDRICAL CONCRETE SPECIMENS.

B. ASTM C136 – STANDARD TEST METHOD FOR SIEVE ANALYSIS OF FINE AND COARSE AGGREGATE.

C. ASTM D4318 – STANDARD TEST METHOD FOR LIQUID LIMIT, PLASTIC LIMIT, AND PLASTICITY INDEX OF SOILS.

D. ASTM D698 – STANDARD TEST METHOD FOR LABORATORY COMPACTION CHARACTERISTICS OF SOIL USING STANDARD EFFORT.

E. ASTM D4595 – STANDARD TEST METHOD FOR TENSILE PROPERTIES OF GEOTEXTILES BY THE WIDE–WIDTH STRIP METHOD.

F. ASTM D5262 – STANDARD TEST METHOD FOR EVALUATING THE UNCONFINED CREEP BEHAVIOR OF GEOSYNTHETICS.

G. ASTM D4632 – STANDARD TEST METHOD FOR GRAB BREAKING LOAD AND ELONGATION OF GEOTEXTILES.

H. ASTM D6638 – STANDARD TEST METHOD FOR DETERMINING CONNECTION STRENGTH BETWEEN GEOSYNTHETIC REINFORCEMENT AND SEGMENTAL CONCRETE UNITS (MODULAR CONCRETE BLOCKS).

I. ASTM D6916 – STANDARD TEST METHOD FOR DETERMINING THE SHEAR STRENGTH BETWEEN SEGMENTAL CONCRETE UNITS.

J. AASHTO – STANDARD SPECIFICATIONS FOR HIGHWAY BRIDGES.

K. NCMA – "DESIGN MANUAL FOR SEGMENTAL RETAINING WALLS".

1.04 DELIVERY, STORAGE, AND HANDLING

A. CONTRACTOR SHALL CHECK THE MATERIALS UPON DELIVERY TO ASSURE THAT PROPER MATERIALS HAVE BEEN RECEIVED.

B. CONTRACTOR SHALL PROTECT THE MATERIALS FROM DAMAGE. DAMAGED MATERIAL SHALL NOT BE INCORPORATED INTO THE WALL OR THE REINFORCED SOIL EMBANKMENTS.

C. CONTRACTOR SHALL PREVENT EXCESSIVE MUD, CONCRETE, ADHESIVES AND OTHER SUBSTANCES THAT MAY ADHERE FROM COMING IN CONTACT WITH THE MATERIALS.

D. EXPOSED FACES OF SEGMENTAL UNITS SHALL BE REASONABLY FREE OF CHIPS, CRACKS, OR STAINS.

1.05 QUALITY ASSURANCE

A. OWNER SHALL EMPLOY SERVICES OF A MATERIAL ENGINEERING FIRM TO PROVIDE QUALITY CONTROL TESTING DURING EMBANKMENT CONSTRUCTION.

1.06 DESIGN SPECIFICATIONS FOR THE STONE STRONG RETAINING WALL SYSTEM

A. THE STONE STRONG RETAINING WALL SYSTEM DESIGN CONSULTANT TAKES RESPONSIBILITY FOR THE ENGINEERING THEORY, CALCULATIONS, AND ENSURING ALL DESIGN ASSUMPTIONS ARE VALIDATED IN THE CONTRACT DOCUMENTS: EITHER BY NEEDED DETAILS OR CONSTRUCTION SPECIFICATIONS.

B. THE PROJECT ENGINEER OF RECORD FOR THE PROJECT IS RESPONSIBLE FOR VERIFYING SOIL ASSUMPTIONS USED IN DESIGN PRIOR TO PRODUCTION.

GENERAL

.

PROVIDE THE FOLLOWING FACTORS OF SAFETY:

SLIDING	> OR EQUAL TO 1.5
OVERTURNING	> OR EQUAL TO 1.5
BEARING CAPACITY	> OR EQUAL TO 2.0
ALLOWABLE DIFFERENTIAL SETTLEMENT	

THE STONE STRONG RETAINING WALL SYSTEM MINIMUM RADIUS AND SPECIAL TURNING BLOCKS4:

CONCAVE APPLICATIONS	16' RADIUS
CONVEX APPLICATIONS	20' RADIUS
45 DEGREE BLOCK	45 DEGREES
90 DEGREE BLOCK	90 DEGREES

PART 2: MATERIALS

2.01 WALL UNITS

A. A. PRECAST MODULAR BLOCKS SHALL BE STONE STRONG UNITS MANUFACTURED UNDER LICENSE FROM STONE STRONG, LLC.

B. CONCRETE FOR PRECAST MODULAR BLOCKS SHALL HAVE A MINIMUM 28–DAY COMPRESSIVE STRENGTH OF 4,000 PSI. ENTRAINED AIR CONTENT SHALL BE BETWEEN 5 AND 7%.

C. REINFORCING STEEL (IF USED) SHALL BE GRADE 60. MINIMUM CLEAR COVER TO REINFORCEMENT SHALL BE 1½ INCHES.

D. THE FACE PATTERN SHALL BE SELECTED FROM THE MANUFACTURER'S STANDARD MOLDS. THE COLOR OF THE UNITS SHALL BE NATURAL GRAY. A CONCRETE STAIN MAY BE FIELD APPLIED TO COLOR THE UNITS IF SPECIFIED BY THE ARCHITECT/ENGINEER OR OWNER.

2.02 GEOGRID

A. IF GEOGRID REINFORCEMENT IS REQUIRED, IT SHALL BE AS SHOWN IN THE PLANS OR AS DETAILED IN THE SHOP DRAWINGS. SUBSTITUTION OF A DIFFERENT TYPE OF GEOGRID SHALL NOT BE ALLOWED UNLESS APPROVED OF THE ARCHITECT/ENGINEER OR OWNER AFTER SUBMITTAL OF SHOP DRAWINGS AND TEST DATA.

2.03 WALL BASE

¾" CLEAN STONE MATERIAL FOR WALL BASE

2.04 UNIT FILL

A. UNIT FILL SHALL BE A CLEAN COARSE AGGREGATE WITH HIGH ANGULARITY. THE UNIT FILL SHALL BE SCREENED 100 PERCENT CRUSHED AGGREGATE MEETING THE FOLLOWING GRADATION:

US STANDARD SIEVE SIZE	PERCENT PASSING
1–1/2"	100
3/4"	60–100
#4	0–40
#200	0–5

2.05 BACKFILL

A. PROVIDE BACKFILL PER PHI ANGLE IN DESIGN CALCULATONS

2.06 DRAIN TILE

A. DRAIN TILE SHALL BE USED IF SHOWN ON THE PLANS OR IF INDICATED BY LOCAL PRACTICES AND CONDITIONS. IF USED, THE DRAIN TILE SHOULD BE A PERFORATED OR SLOTTED PVC OR CORRUGATED HDPE PIPE. THE DRAIN TILE SHOULD BE CONNECTED TO STORM DRAINS OR DAYLIGHTED AT LOW POINTS AND/OR PERIODICALLY ALONG THE WALL ALIGNMENT.

2.07 GEOTEXTILE FABRIC

A. IF SHOWN ON THE PLANS OR THE SHOP DRAWINGS, PROVIDE A GEOTEXTILE FILTER FOR SEPARATION FROM BACKFILL AT THE TAILS OF THE BLOCKS. THE GEOTEXTILE SHALL BE A NEEDLE PUNCHED NONWOVEN FABRIC WITH A MINIMUM GRAB TENSILE STRENGTH OF 120 POUNDS ACCORDING TO ASTM D4632. IF USED, THE GEOTEXTILE MAY COVER THE ENTIRE BACK FACE OF THE BLOCKS OR MAY BE CUT IN STRIPS TO COVER THE GAPS BETWEEN TAIL UNITS WITH A MINIMUM OF 6 INCHES OF OVERLAP OVER THE CONCRETE TAIL ON BOTH SIDES.

PART 3: EXECUTION

3.01 EXCAVATION

A. EXCAVATE AS REQUIRED FOR INSTALLATION OF THE RETAINING WALL SYSTEM. EXCAVATE TO THE BASE LEVEL FOR A SUFFICIENT DISTANCE BEHIND THE FACE TO PERMIT INSTALLATION OF THE BASE AND GEOGRID REINFORCEMENT (IF ANY).

B. SLOPE OR SHORE EXCAVATION AS NECESSARY FOR SAFETY AND FOR CONFORMANCE WITH APPLICABLE OSHA REQUIREMENTS.

3.02 WALL BASE

A. FOUNDATION SOILS SHALL BE EXCAVATED TO THE DIMENSIONS SHOWN ON THE PLANS. FOUNDATION SOIL SHALL BE OBSERVED BY THE GEOTECHNICAL ENGINEER TO CONFIRM THAT THE BEARING SOILS ARE SIMILAR TO THE DESIGN CONDITIONS OR ASSUMPTIONS.

3.03 UNIT INSTALLATION

A. PLACE THE FIRST COURSE OF UNITS DIRECTLY ON THE WALL BASE. CHECK UNITS FOR LEVEL AND ALIGNMENT. ADJACENT UNITS SHOULD BE IN CONTACT. IF POSSIBLE, BEGIN PLACING UNITS AT THE LOWEST SECTION OF THE WALL.

B. FILL ALL VOIDS BETWEEN AND WITHIN THE BLOCKS WITH GRANULAR UNIT FILL. ADDITIONAL UNIT FILL IS NOT REQUIRED BEHIND THE UNITS, BUT MAY BE PLACED FOR THE CONVENIENCE OF THE CONTRACTOR.

C. PLACE BACKFILL BEHIND THE UNITS IN MAXIMUM LOOSE LIFTS OF 8 INCHES AND COMPACT. IF SELECT GRANULAR FILL IS REQUIRED, IT SHOULD EXTEND THE FULL LENGTH OF THE GEOGRID REINFORCEMENT. COMPACT ALL BACKFILL TO A MINIMUM OF 95 PERCENT OF THE MAXIMUM DRY DENSITY (ASTM D698, STANDARD PROCTOR). FOR COHESIVE SOILS, THE MOISTURE CONTENT AT THE TIME OF COMPACTION SHOULD BE ADJUSTED TO WITHIN –3 AND +4 PERCENT OF OPTIMUM. PLACE BACKFILL IN SUCCESSIVE LIFTS UNTIL LEVEL WITH THE TOP OF THE FACING UNIT.

D. REMOVE ALL EXCESS AGGREGATE AND OTHER MATERIALS FROM THE TOP OF THE UNITS BEFORE LAYING UP THE NEXT COURSE.

E. FOR GEOGRID REINFORCED WALLS, PLACE THE CORRECT GEOGRID AT THE LOCATIONS AND ELEVATIONS SHOWN ON THE PLANS OR THE SHOP DRAWINGS. GEOGRID REINFORCEMENT SHALL BE PLACED HORIZONTALLY ON COMPACTED BACKFILL. THE LENGTH OF THE GEOGRID IS MEASURED FROM THE FRONT FACE OF THE WALL. EXTEND THE GRID ONTO THE FRONT FACE FLANGE OF THE FACING UNIT. ORIENT THE GEOGRID WITH THE STRONG AXIS (MACHINE DIRECTION) PLACED PERPENDICULAR TO THE WALL FACE. GEOGRID SHALL NOT BE SPLICED BY ANY MEANS IN THE ROLL DIRECTION.

F. GEOGRIDS SHALL BE PLACED SIDE BY SIDE TO PROVIDE COMPLETE COVERAGE ALONG THE WALL FACE. NO OVERLAP IS REQUIRED BETWEEN ADJACENT GRIDS ON STRAIGHT SECTIONS OF THE WALL. ON CONVEX CURVES, PLACE A MINIMUM OF 3 INCHES OF BACKFILL MATERIAL BETWEEN OVERLAPPING GEOGRID LAYERS.

G. PLACE THE NEXT COURSE OF SEGMENTAL UNITS IN RUNNING BOND WITH THE PREVIOUS COURSE. PLACE THE WEB NOTCH OVER THE ALIGNMENT HOOP PROTRUDING FROM THE UNIT BELOW, AND PULL THE UNIT FORWARD TO CONTACT THE HOOP.

H. FOR GEOGRID REINFORCED WALLS, PULL GEOGRIDS TAUGHT AND STAKE THE LOOSE END BEFORE PLACING THE NEXT COURSE OF BACKFILL. BACKFILL SHALL BE PLACED, SPREAD, AND COMPACTED IN SUCH A MANNER THAT MINIMIZES THE DEVELOPMENT OF WRINKLES IN THE GEOGRID AND/OR MOVEMENT OF THE GEOGRID. DO NOT OPERATE EQUIPMENT DIRECTLY ON THE GEOGRID. A MINIMUM BACKFILL DEPTH OF 6 INCHES SHOULD BE PLACED BEFORE OPERATING EQUIPMENT OVER THE GRIDS.

I. CONTINUE PLACING SUCCESSIVE COURSES TO THE ELEVATIONS SHOWN ON THE PLANS. CONSTRUCT WALL IN LEVEL STAGES, PLACING THE UNITS AT EACH COURSE FOR THE ENTIRE LENGTH OF THE WALL, IF POSSIBLE. UNIT FILL AND BACKFILL SHOULD BE PLACED TO THE LEVEL OF THE TOP OF THE FACING UNIT BEFORE PLACING THE NEXT COURSE.

J. PROVIDE TEMPORARY SWALES TO DIVERT RUNOFF AWAY FROM WALL EXCAVATION AND AWAY FROM FACE.

K. FINAL GRADE ABOVE AND BELOW THE RETAINING WALL SHALL PROVIDE FOR POSITIVE DRAINAGE AND PREVENT PONDING. PROTECT COMPLETED WALL FROM OTHER CONSTRUCTION. DO NOT OPERATE LARGE EQUIPMENT OR STORE MATERIALS ABOVE THE WALL THAT EXCEED THE DESIGN SURCHARGE LOADS.

Garden State PRECAST INC

NUMBER	BY	DATE
1	AC	8/29/24

REVISIONS

NOTES

STONE STRONG SYSTEM - GRAVITY RETAINING WALL

HOME & LAND DEVELOPMENT
NORTH PEAK STREET

GARDEN STATE PRECAST
P.O. BOX 702
FARMINGDALE, NJ 07727
732-938-4436
732-938-7096 - FAX

SHEET 7 OF 7

GEO-INSTITUTE
"Advancing the geo-professional community"

REPORT OF REVIEW THE STONE STRONG SYSTEMS® PRECAST MODULAR RETAINING WALL SYSTEM

January 2021

HIGHWAY INNOVATIONS, DEVELOPMENTS, ENHANCEMENTS AND ADVANCEMENTS (IDEA)

The Stone Strong Systems® Precast Modular Retaining Wall System has been evaluated in accordance with the IDEA protocol. Stone Strong's original HITEC evaluation published in 2010 consisted of gravity wall applications only. This update evaluation consists of review of a system re-evaluation with respect to gravity wall applications and evaluation of the system for MSE applications. Key Information regarding this system is presented in this final report of review. Comprehensive and important details of the system's components, design, construction and quality control measures are presented in the "Summary Table of MSEW Program Input Parameters for Stone Strong Systems® Precast Modular Retaining Wall System" located at the end of this report and the Stone Strong Submittal.

Applicant Information

Stone Strong, LLC
Attn: John Gran
13460 Chandler Road, Suite 100
Omaha, Nebraska 68138
Ph: 402.973.1292
www.stonestrong.com

Review Summary

Following its initial review of the Stone Strong Systems® Precast Modular Retaining Wall System submittal, the review team provided the applicant with three series of comments, requests for clarification and additional testing and analysis. **The applicant has been thorough in its responses and the review team finds that there are no outstanding issues that should be brought to the attention of the transportation agencies. Rather, the agencies are encouraged to rely upon the final Stone Strong Systems® Precast Modular Retaining Wall System submittal for projects where the Stone Strong Systems® Retaining Wall System is proposed.**

Submittal Checklist

The checklists used from the IDEA protocol for this evaluation are C1 – Initial Technical Evaluation Checklist for Concrete Modular Block Paired with Extensible Reinforcement and C7 – Initial Technical Evaluation Checklist for Concrete Modular Gravity Wall System. This is the first update of the previous HITEC evaluation for the Stone Strong Gravity Wall System and this is the first evaluation of the Stone Strong System paired with extensible reinforcement evaluated by IDEA.

Confidential Information

The applicant has the option to omit information from the version of its submittal that is attached to the final report if it believes that such information is confidential. In such instances, the applicant will notify the review

team. However, for Stone Strong Systems® Precast Modular Retaining Wall System no information has been designated by the applicant as confidential.

System Description

Components

Stone Strong Systems® Precast Modular Retaining Wall System is comprised of wet cast concrete large modular block facing units and Paraweb polyester strap soil reinforcements. Other components include gravel core fill, geotextile filter, and traffic barriers. The standard facing unit is 96 inches long, 36 inches high, and 44 inches wide (i.e., deep). The connection of Paraweb strap geosynthetic reinforcement to the Stone Strong unit is made using Macbox inserts in the back of the Stone Strong units. After the Stone Strong modular units are set in the wall, the Paraweb straps are run through the Macbox connector, wrapped around the shielded #5 rebar and laid out in a V-shape in the reinforced fill. There are multiple grades (i.e., strength) of Paraweb straps, however, the Stone Strong System only uses the 2D-50 strap.

System History

Stone Strong precast modular retaining wall units were originally developed in 2002 and 2003. The product was first licensed to a dealer in 2003, and the first commercial retaining walls were completed in early 2004. At that time, only the standard 44-inch width units were available, along with the Corner/End unit.

The original market for Stone Strong precast modular retaining walls was private development and commercial projects. The system has also gained widespread acceptance with public clients, including state transportation departments, provincial transport ministries, and local county/municipal entities across the US and Canada. Over the past 18 years, millions of square feet of Stone Strong facing have been installed. A large percentage of the walls have been gravity retaining structures, but over the last 5 years many MSE walls have also been erected using the Paraweb reinforcement.

The oldest Stone Strong gravity wall was installed in 2004, in Milford Massachusetts. The oldest MSE wall with Paraweb reinforcement located in the US was installed in 2018 in Nebraska. The tallest gravity wall is 36 feet in height and is located in Maryland. The tallest Paraweb reinforced Stone Strong MSE wall in the US is 30 feet and the tallest located outside of the US is 39 feet.

System Properties

The following properties are reported by the applicant for Stone Strong Systems® Precast Modular Retaining Wall System.

> **Soil reinforcement ultimate tensile strengths**. The ultimate tensile strengths for the Paraweb polyester strap soil reinforcement are the minimum average roll values (MARV) as published by the reinforcement manufacturer, Linear Composites/Maccaferri. The AASHTO NTPEP independently measured ultimate strength values (NTPEP, 2018) indicate that the sampled products have a tensile strength that exceeds the manufacturer's MARVs.
> **Soil reinforcement nominal tensile strengths**. The nominal tensile strengths (T_{al}) for the Paraweb 2D-50 polyester strap soil reinforcement is computed as the ultimate strength ($T_{ult\text{-}MARV}$) divided by

reduction factors for creep (RF_{CR}), degradation (RF_D), and installation damage (RF_{ID}). The equation for this calculation is:

$$T_{al} = \frac{T_{ult-MARV}}{RF_{CR} x RF_D x RF_{ID}} \qquad \text{Eq. 1}$$

The AASHTO NTPEP independently measured creep reduction value (NTPEP, 2018) of 1.36 is used for both a 75- and 100-year design life. The durability reduction factor is a function of wall fill specifications, particularly pH limits. A durability reduction value of 1.15 or 1.3 is typical. The installation damage reduction factor is a function of the wall fill properties (gradation, D_{50}, angularity, etc.) and placement techniques. Recommended values or value ranges are presented for three wall fills with maximum gradation sizes 2-inch, 3/4-inch and No. 4 sieve.

Soil reinforcement-facing unit connection capacity. The connection capacities of the Paraweb strap and Stone Strong Modular units has been evaluated by short-term connection strength testing. The long-term Paraweb strap creep reduction factor was used to evaluate the long-term connection strength.

Reinforcement Pullout and Interface Shear. Independent pullout test results are as presented in Appendix Tab 1.2.7. Testing was performed on Paraweb straps in general accordance with ASTM D 6706. The tests were performed on a range of soils (i.e., silty sand, concrete sand and graded aggregate base). Based on these results, an F* equal to 1.0 tanφ to a depth of 7 feet, 0.8 tanφ below a depth of 7 feet, and α value equal to 0.8 may be used for reinforced backfill consisting of sand and in the absence of project-specific pullout testing.

The interface shear friction angle was determined from direct shear tests in general accordance with ASTM D 5321. A copy of the interface direct shear test report is provided in Appendix Tab 1.1.10. Based on the test results the interface friction coefficient (ρ) is equal to 0.7 for well-graded sand (SW) and gravel (GW) and equal to 0.7 for fine to medium sands and poorly-graded sands (SP).

System Innovations

This IDEA evaluation concurs with Stone Strong that their system provides the following innovations:

- The majority of wet cast modular retaining wall systems are solid concrete blocks. Stone Strong is a structural shape, typically consisting of two webs connecting the face shell and back wall. The thickness of the webs and shells were established to provide sufficient strength in a plain concrete (unreinforced) section to perform in most gravity wall applications and reinforced in typical MSE applications.
- The other innovation is the use of an inherently stable facing unit with a geosynthetic strap reinforcement for MSE wall applications. Most MSE wall systems with geosynthetic strap reinforcements utilize a thin facing panel that must be plumbed and braced when set. By using a robust, block-style facing, the process to set the facing is simplified.

References

HITEC (2010). *Technical Evaluation Report, Evaluation of the Stone Strong Gravity Wall System by Stone Strong,* Highway Innovation Technology Evaluation Center, American Society of Civil Engineers, Washington, D.C.

NTPEP (2018). Laboratory Evaluation of Geosynthetic Reinforcement, Final Product Qualification Report for Linear Composites Paraweb Product Lines, Submitting Manufacturer: Linear Composites, National Transportation Product Evaluation Program (NTPEP) Report REGEO-2016-01- [Linear Composites-Paraweb-Paralink], American Association of State Highway and Transportation Officials (AASHTO), Washington, D.C.

Summary Table of MSEW Program Input Parameters for Stone Strong Systems® Precast Modular Retaining Wall System				
Paraweb Soil Reinforcement				
Data / Paraweb		Paraweb 2D-50 0-7 ft depth 48-in spacing	Paraweb 2D-50 >7 ft depth 48-in spacing	Paraweb 2D-50 > 12 ft depth 32-in spacing
T_{ult} (lb/ft)		38,101	38,101	38,101
Durability Reduction Factor, RF_D	5<pH<8	1.15	1.15	1.15
	4.5≤pH≤5	1.3	1.3	1.3
	8≤pH≤9	1.3	1.3	1.3
Installation Damage Reduction Factor, RF_{ID}	100% passing 2-in.	1.20	1.20	1.20
	100% passing ¾-in.	1.10	1.10	1.10
	100% passing No. 4	1.10	1.10	1.10
Creep Reduction Factor, RF_{cr}	75 years	1.36	1.36	1.36
	100 years	1.36	1.36	1.36
Coverage Ratio		0.147	0.147	0.221
Friction Coefficient along geogrid-soil Interface, ρ	Sands[a]	0.7	0.7	0.7
	Gravel[a]	0.7	0.7	0.7
Pullout Resistance factor, F*	Sands[a]	1.0 tan φ	0.8 tan φ	0.8 tan φ
	Gravels[a]	1.0 tan φ	0.8 tan φ	0.8 tan φ
Scale-effect correction factor, α	Sands[a]	0.8	0.8	0.8
	Gravels[a]	0.8	0.8	0.8
Facia Geometry and Unit Weight:		Depth/height = 3.67 ft / 3.0 ft		
		Horizontal distance to center of gravity = 1.90 ft		
		Average unit weight of block = 122.2 lb/ft^3		
Connection Strengths:		$CRcr^c$ x (T_{LOT}/T_{MARV})		
	σ'^b (lb/ft^2)	Paraweb 2D-50 0-7 ft depth 48-in spacing	Paraweb 2D-50 >7 ft depth 48-in spacing	Paraweb 2D-50 > 12 ft depth 32-in spacing
	0	0.63	0.63	0.63
	10,000	0.63	0.63	0.63
Connection strength reduction factor, Rf_d[d]		1.00	1.00	1.00
Creep Reduction Factor, Rf_c[d]		1.00	1.00	1.00

Notes: [a] Predominate material; [b] Normal pressure (lbf/ft^2); [c] MSEW program term (T_{cre}/T_{ult});

[d] The value for CR_{cr}^c includes reduction factors for durability and creep.

Product Submittal

Innovations, Developments, Enhancement and Advancements (IDEA) Program

Stone Strong
Precast Modular Retaining Wall System

January 8, 2021

Stone Strong LLC or the respective owner of other intellectual property included herein retains all common law, statutory, and other reserved rights including the copyright to the concepts, information, data, and drawings in this submittal.

Paraweb and Macbox are products manufactured exclusively by Maccaferri or their direct subsidiaries. Maccaferri retains all rights, including the copyright, to their intellectual property included herein.

The information in this submittal is solely for use in assessing the retaining wall system and its components and is not intended for construction of any specific retaining wall. Site specific design should be performed by a licensed Professional Engineer based on actual site conditions, materials, and local practices or requirements.

Product Submittal
Innovations, Developments, Enhancement and Advancements (IDEA) Program

Table of Contents

INTRODUCTION 1

SECTION 1: ERS COMPONENTS 4
1.1 FACING UNIT 4
1.1.1 Facing Innovations 4
1.1.2 Facing Components 4
1.1.3 Component Specifications 6
1.1.4 Reinforcement Connection 7
1.1.5 Unit Dimensions and Tolerances 8
1.1.6 Unit Fabrication 8
1.1.7 Concrete Compressive Strength 8
1.1.8 Facing Unit Absorption 8
1.1.9 Concrete Air Content 8
1.1.10 Interface Shear Properties 8
1.1.11 Alignment Details 9
1.1.12 Filtration 10
1.1.13 Face Patterns 11
1.1.14 Curves and Corners 12
1.2 EXTENSIBLE REINFORCEMENT 14
1.2.1 Reinforcement Innovations 14
1.2.2 Reinforcement Type 15
1.2.3 Reinforcement Properties 15
1.2.4 NTPEP Report 15
1.2.5 Reinforcement Connection Details 15
1.2.6 Connection Properties 15
1.2.7 Reinforcement Pullout Properties 17
1.2.8 Direct Sliding Properties 19
1.3 OTHER COMPONENTS 19
1.3.1 Other Innovations 19
1.3.2 Reinforced Soil 19
1.3.3 Drainage 20
1.3.4 Coping 20
1.3.5 Traffic Barriers 22
1.3.6 Slip Joints 24

SECTION 2: ERS DESIGN 25
2.1 DESIGN METHODOLOGY 25
2.1.1 Design Innovations 25
2.1.2 Design Methodologies 25
2.1.3 Reinforcement Obstructions 26
2.2 DESIGN EXAMPLE 26
2.2.1 MSE Design Problem 1 (C1 Checklist) 26
2.2.2 MSE Design Problem 2 (C1 Checklist) 27
2.2.3 Gravity Design Problem 1 (C7 Checklist) 28
2.2.4 Gravity Design Problem 2 (C7 Checklist) 28

SECTION 3: CONSTRUCTION 29
3.1 CONSTRUCTION PROCEDURES 29
3.1.1 Construction Innovations 29
3.1.2 Installation Manual 29

© Stone Strong Systems

3.1.3 Facing Unit Installation *29*
3.1.4 Facing Installation on Curved Sections & Corners *29*
3.1.5 Reinforcement Installation on Curved Sections & Corners *30*
3.1.6 Facing Alignment *30*
3.1.7 Backfill Placement *30*
3.1.8 Erosion During Construction *31*
3.1.9 Installer Qualifications *31*

SECTION 4: QUALITY CONTROL **32**
4.1 MANUFACTURING 32
4.1.1 Facing Production Quality Control *32*
4.1.2 Reinforcement Manufacture Quality Control *32*
4.1.3 Connection Manufacture Quality Control *32*
4.2 CONSTRUCTION 32
4.2.1 Construction Quality Control *32*

SECTION 5: PERFORMANCE **33**
5.1 PERFORMANCE HISTORY 33
5.1.1 System Development and Usage *33*
5.1.2 Oldest 3 Structures *33*
5.1.3 Tallest 3 Structures *34*
5.1.4 Agency/Owner Approvals *34*

SECTION 6: OTHER INFORMATION **36**
6.1 OTHER INFORMATION 36

APPENDIX

Supporting information in the Appendix is presented following the same numbering system in the text of the submittal and the IDEA C1 checklist. Checklist C7 information for gravity wall applications is also incorporated into this submittal in the corresponding section numbers from the C1 checklist or in additional subsections added at the end of a main section.

© Stone Strong Systems

INTRODUCTION

This submittal presents information on the Stone Strong precast modular retaining wall system. The system was developed by Stone Strong Systems, Omaha, Nebraska, and is licensed to producer/dealers across North America and the South Pacific region.

Stone Strong is a large-format, wet-cast concrete product (see Figure 1). The wall units are machine set to construct earth retaining systems on public and private infrastructure and development projects. The units conform to ASTM C1776, Standard Specification for Wet-Cast Precast Modular Retaining Wall Units.

Figure 1 – Stone Strong 24SF Unit

Unlike most precast modular block systems, Stone Strong is not a solid mass of concrete. Rather, Stone Strong units follow structural shapes, typically with two webs connecting the face shell and back wall, creating a center void and half voids on both sides of the block. When installed in a wall, the half voids meet, and the voids align in either a running bond or stack bond to create continuous vertical column voids through the wall (see Figure 2). These voids are normally filled with drainage aggregate, but can also be utilized as a stay-in-place form to incorporate structures or other rigid elements into a retaining wall.

© Stone Strong Systems

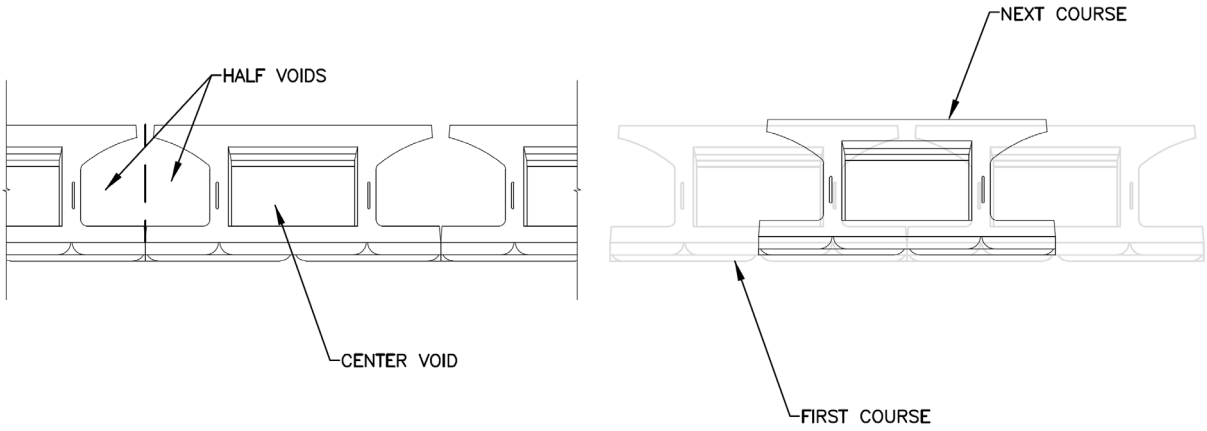

Figure 2 – Alignment of Block Voids in Running Bond Layup

Stone Strong Systems was originally reviewed by the Highway Innovative Technology Evaluation Center (HITEC). The final evaluation report was issued by HITEC in February 2010. This report only covered gravity applications, and was conducted under the 2002 AASHTO standard. Additional components have been added to the system since that report, but the design principles are comparable to the original submittal. Although the calculation of forces and resistance has not changed, the design procedures have been updated to the current AASHTO LRFD standard.

In addition to gravity configurations, Stone Strong has developed an MSE system using Paraweb reinforcing straps manufactured by Linear Composites/Maccaferri (see Figure 3). The MSE application is configured similarly to traditional steel strap MSE systems, but with a more robust facing system to simplify installation and improve system productivity. The MSE and gravity applications are intended to be installed together seamlessly, both along a wall alignment and within a vertical section to accommodate later construction near the crest of a wall.

Figure 3 – Paraweb 2D-50 Reinforcing Strap

© Stone Strong Systems

The following sections of this report follow the Innovations, Developments, Enhancement and Advancements (IDEA) Program checklist C1. The C7 checklist information is also incorporated into this submittal for gravity wall applications, but is generally addressed in the corresponding section numbers from the C1 checklist or in additional subsections added at the end of a main section.

© Stone Strong Systems

SECTION 1: ERS COMPONENTS

1.1 FACING UNIT

1.1.1 Facing Innovations

Stone Strong incorporates several unique features and innovations that advance the state of practice for retaining wall delivery. The fundamental principle is that a large size enhances productivity, stability, and economy. The large size also creates a simpler, more robust retaining wall.

The majority of precast modular retaining wall systems are solid concrete blocks. Stone Strong is a structural shape, typically consisting of two webs connecting the face shell and back wall. The thickness of the webs and shells were carefully established to provide sufficient strength in a plain concrete (unreinforced) section to perform in most gravity wall applications. However, all extended units (greater than 44 inches wide, measured face to tail) are reinforced, and most units are reinforced in an MSE application.

The other important innovation is the use of an inherently stable facing unit in a strap-style MSE wall application. Most current strap-style MSE systems utilize a thin facing panel that must be carefully plumbed and braced when set. By using a robust, block-style facing, the process to set the block is simplified.

Ultimately, the most important innovation is the combination of the gravity wall capabilities and MSE wall capabilities into a single, coherent wall system that brings efficiency to a wide array of project types and applications.

1.1.2 Facing Components

Stone Strong is a complete system, including a variety of precast modular block units and accessories that adapt to most configurations and applications. The following is a list of standard Stone Strong components:

24SF unit	24SF Top unit	24-86 unit	24-62 unit
24-ME unit	6SF unit	6SF Top unit	3SF unit
3SF Top unit	6-28 unit	6-28 Top unit	3-28 unit
3-28 Top unit	Dual Face unit	Dual Face Half unit	3-Sided End unit
End unit	Corner unit	90 Deg Corner unit	45 Deg Corner unit
Inside Corner unit	Outside Corner unit	Cap unit	Custom Top unit

The 24SF unit is the primary block that the system is based around. This block is 36 inches tall and 96 inches long (length is measured along the face of the wall), covering 24 square feet of wall face for each unit. The 24SF unit is 44 inches wide (width is measured perpendicular to the face), and weighs approximately 6,000 pounds. When filled with drainage aggregate, this unit weighs approximately

© Stone Strong Systems

10,000 pounds. The block has two webs connecting the face shell and back wall, creating a center void and half voids on both sides of the block. The webs are centered on the quarter points, 2 feet from each edge (spaced 4 feet apart), so the webs and voids align vertically when stacked either on running bond or stack bond. In gravity wall applications, this block is unreinforced. The 24SF-P version used in MSE retaining walls is reinforced in the face, webs, and rear shell. The 24SF-P unit also includes 4 Macbox inserts for connecting Paraweb straps.

Several extended versions of the 24SF unit are available, and can be used to build taller gravity walls. The 24-86 unit has the same face dimensions as the 24SF unit, but the webs have been extended to provide a unit width of 86 inches. Similarly, the 24-62 unit has been extended to a width of 62 inches. The 24-ME unit has a width of 56 inches, but this is accomplished by increasing the thickness of the rear shell. These units are typically only used in gravity applications, and are not normally produced with Macbox inserts for use in an MSE application.

The 6SF unit is one-fourth of the size of the 24SF unit. With a height of 18 inches and length of 48 inches, this block covers 6 square feet of wall face. The unit has a similar shape as the 24SF unit, with 2 webs located at the quarter points. The block is unreinforced in gravity applications, and is provided with a single Macbox insert for MSE applications. The 6SF unit can be used at either the top or bottom of a wall to make steps in 18 inch increments, or can be used for the entire wall section where necessary to achieve a tighter radius or in cases where access is limited to small equipment that cannot carry the heavier 24SF units.

The 6-28 unit is a lighter version of the 6SF unit. The 6-28 unit has a height of 18 inches and length of 48 inches, but has a reduced width of 28 inches. This unit weighs approximately 950 pounds, and can be used at the top of the wall or as an MSE facing unit. The 6-28 unit can also be used in landscape application for wall heights of 3 to 4.5 feet, typically.

There are numerous accessory units available, including several corner block options (End/Corner, 90 Degree Corner, 45 Degree Corner, Outside Corner, and Inside Corner), Dual Face units (architectural finish on both the front and rear faces of the unit), End units, Cap units, 3SF, 3-28, and top block versions of the 24SF, 6SF, 6-28, 3SF, and 3-28 units.

Note that cap units are not commonly used on retaining walls that are backfilled to the top of the wall, but are available for use on above grade parapets or special applications. Instead, top units are normally used where the webs and rear shell are coped down to allow for backfill to be brought to the back of the block face, as shown Figure 4. Top units are available for 24SF, 6SF, and 6-28 units. An End unit is used to provide a finished transition at steps in the top of the wall, as shown. Other top treatments can be used and are discussed in section 1.3.4. Fences, railings, vehicle guardrails, and highway barriers with moment slabs can be accommodated above the wall as well.

© Stone Strong Systems

Figure 4 – Top Unit and Landscaping Around End Unit

1.1.3 Component Specifications

Design weights and dimensions for standard Stone Strong units are provided in the following table. Note that top units are not included as they are typically analyzed as the parent unit.

Unit Type	Description	Conc. Wt. (lbs)	Void Vol (ft3)	Length (ft)	Height (ft)	Unit Width (in)
Standard units (verify availability - not all units available from every producer)						
24	24SF unit (24 square feet)	6,000	43.21	8.00	3.00	44.0
24-ME	24SF Mass Extender unit	10,000	44.94	8.00	3.00	56.0
24-62	24-62 unit (extended 24SF)	6,800	76.05	8.00	3.00	62.0
24-86	24-86 unit (extended 24SF)	7,600	117.90	8.00	3.00	86.0
6	6SF unit (6 square feet)	1,500	10.95	4.00	1.50	44.0
3	3SF unit (3 square feet)	750	5.48	2.00	1.50	44.0
6-28	6-28 Unit (mini 6SF)	950	6.65	4.00	1.50	28.0
3-28	3-28 Unit (mini 3SF)	475	3.33	2.00	1.50	28.0
Alternate top units						
Cap	Cap unit	1,600	0.00	8.00	0.58	32.0
DF	Dual Face unit	3,500	0.00	8.00	1.50	28.0
Vertical stack units (modified recess and face to permit construction of a vertical face)						
V24	Vertical 24SF unit (24 square feet)	6,000	43.21	8.00	3.00	43.0
V24-ME	Vertical 24SF Mass Extender unit	10,000	44.94	8.00	3.00	55.0
V24-62	Vertical 24-62 unit (extended 24SF)	6,800	76.05	8.00	3.00	61.0
V24-86	Vertical 24-86 unit (extended 24SF)	7,600	117.90	8.00	3.00	85.0
V6	Vertical 6SF unit (6 square feet)	1,500	10.95	4.00	1.50	44.0
V3	Vertical 3SF unit (3 square feet)	750	5.48	2.00	1.50	44.0
V6-28	Vertical 6-28 Unit (mini 6SF)	950	6.65	4.00	1.50	28.0
V3-28	Vertical 3-28 Unit (mini 3SF)	475	3.33	2.00	1.50	28.0

Components are manufactured under license from Stone Strong, LLC by producer/dealers. The blocks are cast in forms provided through Stone Strong. Concrete must meet a minimum compressive strength

© Stone Strong Systems

of 4,000 psi, although much higher strength mixes are typically used in order to attain sufficient early strength to remove the product from the form. All units meet or exceed the requirements of ASTM C1776.

For gravity wall applications, most units are unreinforced. The exception would be the extended 24SF units, including the 24-86, 24-62, and 24-ME units, which are always reinforced.

In MSE wall applications, the majority of the units are reinforced. For taller walls, heavier reinforcement is required for units in the lower sections.

Appendix section 1.1.3 includes Technical Memorandum TM-2018-01 that details what type of reinforcement is required based on the application. Reinforcing details and structural calculations for reinforcing are also included in this Appendix section (refer also to IDEA checklist C7, item 1.1.4).

1.1.4 Reinforcement Connection

In MSE applications, Paraweb reinforcement is attached using Macbox inserts in the back of the Stone Strong block unit. A Macbox assembled with a rebar and a Paraweb strap is shown in Figure 5.

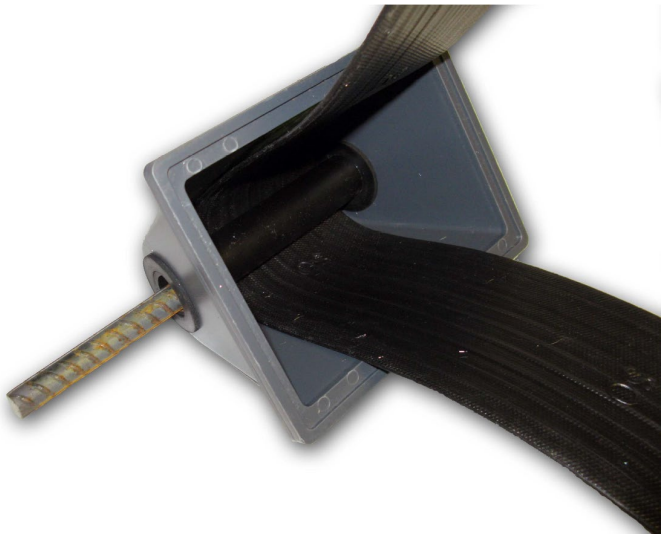

Figure 5 – Maccaferri Macbox Insert with Paraweb

The Macbox connection is manufactured exclusively by Maccaferri, and consists of an HDPE box to create a cavity in the back of the block unit. A polymeric sleeve runs through the cavity and is sealed to the box with rubber bushings. A #5 bar is inserted through the Macbox in the back wall of the block unit (see Paraweb insert details in Appendix section 1.1.4). After the block is set in a wall, Paraweb straps are run through the cavity and wrapped around the shielded #5 bar. The straps are laid out in a V-shape in the reinforced fill zone (see typical Paraweb layout in this Appendix section). This creates a positive mechanical connection of the Paraweb to the facing unit.

© Stone Strong Systems

1.1.5 Unit Dimensions and Tolerances

A library of standard units with dimensions, weights, and infill volume is included in the Appendix under section 1.1.5.

Stone Strong requires producers to maintain relatively tight tolerances. The height and length of the units are held to ±1/8 inch from design dimensions, and the width is held to between -1/4 inch to +1/2 inch from design. Note that these tolerances are significantly tighter than the tolerances in ASTM C1776 for comparable products.

1.1.6 Unit Fabrication

Stone Strong precast modular units are produced in a wet-cast process. The units are typically produced in climate controlled precast plants.

Most units are cast in a face-down orientation in heavy steel forms. Architectural face patterns are achieved with interchangeable synthetic liners attached in the form. The forms have either hinged or rollback doors to speed and simplify stripping and setup.

1.1.7 Concrete Compressive Strength

All Stone Strong products have a minimum compressive strength of 4,000 psi. Units are required to achieve this strength prior to shipping.

A compressive strength of approximately 1,200 psi is required to safely lift a block unit from the form. Each form may be poured once, twice, or even 3 times per 24-hour period. In order to turn the form in 8 to 20 hours, a design mix strength of 5,000 to 6,500 psi is used by the majority of the licensed producers.

1.1.8 Facing Unit Absorption

Not applicable

1.1.9 Concrete Air Content

Precast mixes for most producers use a nominal maximum aggregate size of 3/4 to 1 inch. For normal exposures, Stone Strong recommends an entrained air content of 5% to 7%. However, precast modular units cast for extreme exposure conditions, such as shorelines or saltwater exposures, the guidance from PCA Manual on Control of Air Content in Concrete (EB116) should be followed.

1.1.10 Interface Shear Properties

Shear tests were performed in 2004 and 2005 on 24SF units and 6SF units. These tests were originally included in geogrid interaction reports. The data has been excerpted and supplemented with design shear capacity envelopes, and are included in Appendix section 1.1.10. Note that the steel lift/alignment loops were removed for this testing, and interface shear was obtained through aggregate interlock

© Stone Strong Systems

through the large voids filled with coarse drainage aggregate. The peak and deflection limited shear resistance was slightly higher for the 6SF units, so the values from the 24SF unit tests are used for design, as follows:

$V_u = N \tan 35.2° + 362$ lb/ft

where N is the normal force (weight of overlying block/infill) and V_u is the ultimate shear capacity between units (both values in lb/ft of wall)

The complete original interaction reports are also included in the Appendix for reference. Note that these reports include geogrid connection tests, but that the use of geogrid reinforcement in MSE walls is not included in this submittal. These reports are only provided as supporting information for the interface shear tests referenced above.

1.1.11 Alignment Details

Stone Strong utilizes a lifting and alignment loop on the 24 square foot and 6 square foot units. The loop is positioned at the block center of gravity so that the 44 inch wide blocks lift level and can be easily set into place in a wall. A corresponding alignment recess is provided in the bottom of these units that fits over the lift/alignment loop to set the batter, as shown in Figure 6.

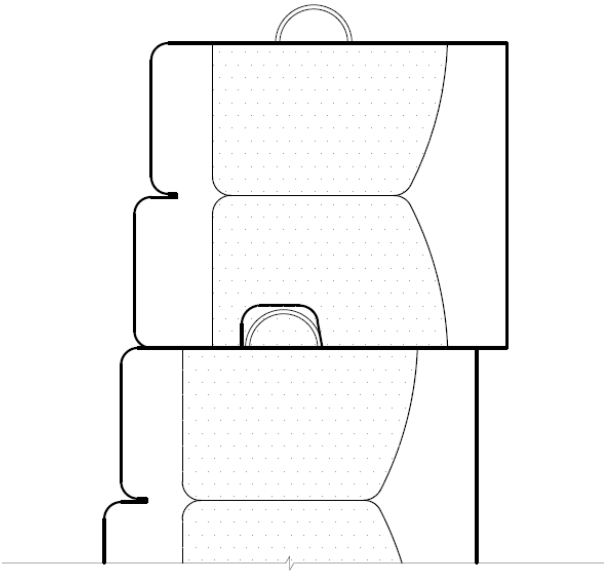

Figure 6 – Lift/Alignment Mechanism, 4-inch Setback

The standard Stone Strong units are set up for a 6.3 degree face batter. This is achieved with a setback of 4 inches for 24SF units (36 inch height) and 2 inches for 6SF units (18 inch height). The alignment can be changed by adjusting the alignment recess, however. The recess former is held in the form by bolts or magnets, and can be reconfigured to extend the recess toward the rear of the block by 4 inches or 2 inches, respectively, resulting in a vertical face alignment. Note that some of the architectural

© Stone Strong Systems

finishes have batter built into the face of the unit, but all of the standard patterns are available without any batter in the liner for vertical applications.

The lift/alignment loops are available off-the-shelf from several precast industry suppliers. These are galvanized smooth bars, either 5/8 inch for 24SF units or 1/2 inch for 6SF units. The lift loops can also be fabricated using conventional rebar benders using smooth 5/8 inch or 1/2 inch bar stock that is then hot-dip galvanized.

Note that the alignment mechanism is provided purely for simplicity and productivity during installation. The design values for interface shear do not rely on any connection force from this alignment mechanism. The interface shear tests used for design were performed with the lifting loops removed.

1.1.12 Filtration

The block voids are filled after placement with coarse drainage aggregate. The unit fill serves several functions: 1) internal drainage, 2) interface shear between block units, and 3) retention at the facing joints.

Unit fill should generally consist of a screened crushed aggregate. To achieve the required inter-unit shear resistance, Stone Strong recommends that a minimum of 75% of coarse material should have 2 or more fractured faces. The following gradation is suggested for the unit fill:

US Standard Sieve Size	Percent Passing
1-1/2"	100
3/4"	50-90
#4	0-10
#8	0-5

Stone Strong allows this gradation to be adjusted for locally available aggregates. For alternate gradations, the nominal maximum size should be between 3/4 inch and 2 1/2 inches. The percent passing the #4 sieve should also be limited to roughly 10 percent, both for drainage and joint retention functions. The normal joint installation tolerance is for gaps no wider than ¼ inch, and the coarse unit fill material will bridge the joints and minimize any loss of unit fill aggregate through the joints.

The large size of the Stone Strong units results in a 3 feet wide zone of drainage aggregate between the backfill and the face of the wall. Any seepage from the retained backfill is collected in one or more drain tiles installed inside or behind the facing units. Free moisture can also weep through the face joints. A drainage column can also be provided behind the facing units, especially in applications subject to rapid drawdown such as a channel wall. In an MSE application, it is best to capture any ground water seepage at the back of the reinforced soil zone.

To provide filtration between the unit fill drainage zone and the backfill or reinforced fill zone, a geotextile filter is recommended for DOT applications. In this case, a non-woven geotextile filter can

© Stone Strong Systems

be placed on the back of the units or behind any drainage column behind the units. The geotextile can be placed in a solid piece covering the entire back of the precast units, or can be installed in discrete strips covering the gaps in the back of the units, as shown in Figure 7.

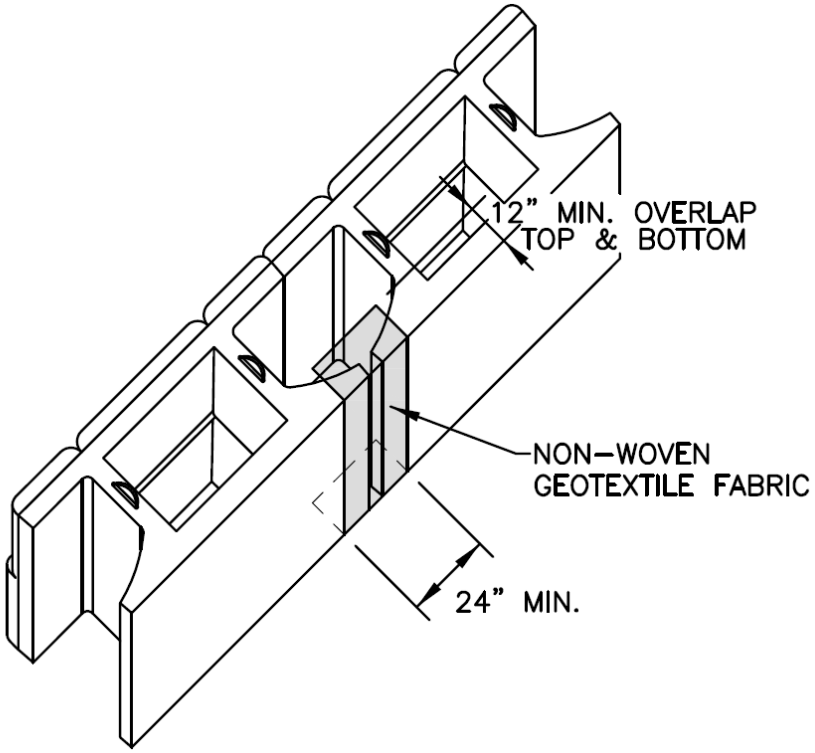

Figure 7 – Optional Geotextile on Back of Facing

1.1.13 Face Patterns

Architectural finishes are cast into the face of the units using a synthetic liner mounted in the forms. The liners are interchangeable, and virtually any pattern can be cast into the units.

Sample face patterns are shown in Figure 8. These patterns are generally produced in plain concrete. Color can be added by applying concrete stain after erection or by casting the units with integral color. The Fractured Ledge pattern lends itself to stain-hardeners applied in the form. In this process, powdered stain-hardener can be shaken into the liner and multiple colors can be layered in. The color then impregnates into the plastic concrete when the block is cast.

An anti-graffiti coating can also be applied to the precast units after erection.

© Stone Strong Systems

CHISELED GRANITE
Derived from blocks hand-chiseled by artisans, the pattern is intended to match the classic look of natural, chiseled stone.

FRACTURED LEDGE
Created from actual fractured ledge stone, the highly defined pattern offers the most natural look to match most any application.

POTOMAC
Smooth and broken up, this pattern was produced to replicate actual original cobblestone from the East Coast cities.

TENNESSEE FOOTHILLS
Sharp and well defined, the pattern was developed by laser-mapping actual retaining walls in the Smoky Mountains.

Figure 8 –Face Patterns

In addition to these face patterns, custom liners can produced to match nearly any environment. Several architectural finishes have been created by laser scanning existing surfaces and producing matching liners through computer aided machining. In addition, units can be produced with smooth finish or with exposed aggregate.

1.1.14 Curves and Corners

All of the precast modular units have tapered sides to accommodate curved alignments.

The 24SF unit is 96 inches long on the face, but only 90 inches long at the rear shell (see Figure 9). This results in a taper of 4.5° on each side. Thus, a deflection of 9 degrees may be made at any joint. On a convex curve, the minimum radius is controlled by this taper. The tails come into contact at the minimum radius, and a tighter radius would result in a gap at the face. For 24SF units, the theoretical minimum radius in a convex curve is 51.67 feet (see Figure 10). Note that the minimum convex radius occurs at the top of the wall when the facing is battered, and the minimum layout radius must be adjusted

© Stone Strong Systems

for the setback between courses. On a concave radius, the minimum radius is controlled by overhang at the joints when the units are installed on running bond. The recommended minimum concave radius is 46 feet (see Figure 10). On a concave radius, the minimum radius occurs on the bottom course when the facing is battered.

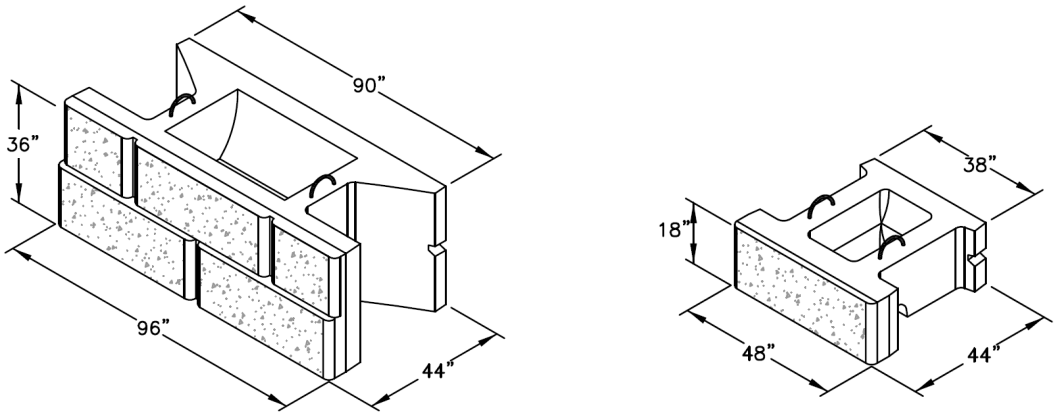

Figure 9 – 24SF & 6SF Unit Dimension & Taper

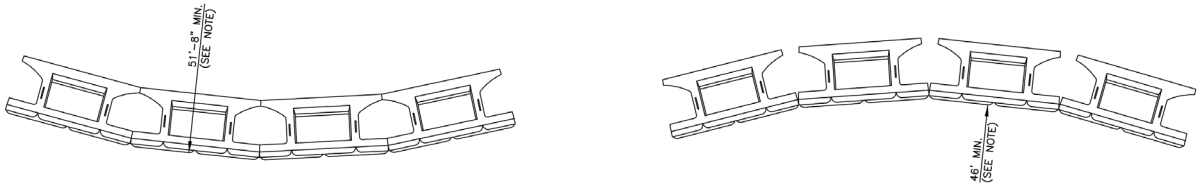

Minimum Convex Radius, 24SF Units		
Wall Height (ft)	Total # of Courses	Min. Radius at First Course
6	2	52' 0"
9	3	52' 4"
12	4	52' 8"
15	5	53' 0"
18	6	53' 4"
21	7	53' 8"
24	8	54' 0"

Minimum Concave Radius, 24SF Units		
Wall Height (ft)	Total # of Courses	Min. Radius at Top Course
6	2	46' 4"
9	3	46' 8"
12	4	47' 0"
15	5	47' 4"
18	6	47' 8"
21	7	48' 0"
24	8	48' 4"

Figure 10 – Minimum Radius for 24SF Units (Battered)

The 6SF unit is 48 inches long on the face and 38 inches long at the back (see Figure 9), resulting in a 7.5° degree taper. Similarly, the minimum radius is controlled by the tail taper or by overhang. For the 6SF units, the theoretical minimum radius in a convex curve is 16 feet (see Figure 11). Note that the minimum convex radius occurs at the top of the wall when the facing is battered, and the minimum

© Stone Strong Systems

layout radius must be adjusted for the setback between courses. On a concave radius, the minimum radius is controlled by overhang at the joints when the units are installed on running bond. The recommended minimum concave radius is 13.5 feet (see Figure 11). On a concave radius, the minimum radius occurs on the bottom course when the facing is battered.

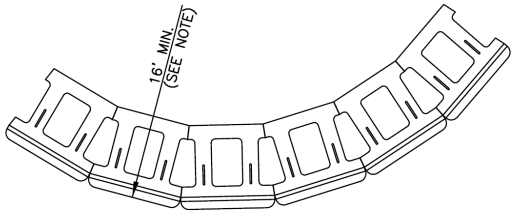

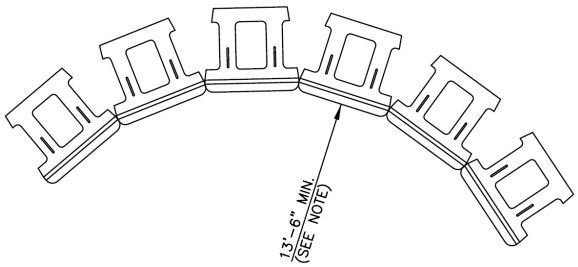

Minimum Convex Radius, 6SF Units		
Wall Height (ft)	Total # of Courses	Min. Radius at First Course
3	2	16' 2"
4 1/2	3	16' 4"
6	4	16' 6"
7 1/2	5	16' 8"
9	6	16' 10"
10 1/2	7	17' 0"
12	8	17' 2"

Minimum Concave Radius, 6SF Units		
Wall Height (ft)	Total # of Courses	Min. Radius at Top Course
3	2	13' 8"
4 1/2	3	13' 10"
6	4	14' 0"
7 1/2	5	14' 2"
9	6	14"4"
10 1/2	7	14' 6"
12	8	14' 8"

Figure 11 – Minimum Radius for 6SF Units (Battered)

The 24SF units and 6SF units are intended to be used together. Where a tight radius is required, the blocks can be transitioned from 24SF units to 6SF units, and switched back for the next straight section of the wall.

Several different styles of corner units are available. For 90° corners, there are 3 different corner blocks that can be utilized, depending are the particular requirements of the project. A 45° corner block is also available. When taking advantage of the block side taper on both sides of the corner unit, the actual corner angle can vary as much as 15° from either 90° or 45°.

1.2 EXTENSIBLE REINFORCEMENT

1.2.1 Reinforcement Innovations

Stone Strong MSE wall applications use an innovative combination of robust precast modular facing units with Paraweb reinforcing straps. Paraweb geosynthetic strap reinforcement is manufactured

© Stone Strong Systems

exclusively by Maccaferri, and is exclusively used with Stone Strong in the precast modular block retaining wall market. This combination is simpler, speeds installation, and allows for a wider range of backfill materials. In addition to the economics associated with MSE applications, the facing can transition seamlessly into a gravity wall configuration at reduced heights, further improving the speed of installation and reducing the overall cost of the combined retaining wall.

1.2.2 Reinforcement Type

Stone Strong utilizes Paraweb geosynthetic reinforcement strips manufactured exclusively by Maccaferri. Paraweb straps are manufactured of high-tenacity, multifilament polyester yarns aligned and coextruded with a polyethylene (LLDPE) sheath.

Most Stone Strong MSE applications utilize 2D-50 straps, but other weights and grades may be used. A Paraweb 2D-50 strap is shown in Figure 3.

1.2.3 Reinforcement Properties

The Paraweb 2D-50 strap has an ultimate tensile strength of 11,240 pounds, and a long-term design strength (coarse gravel soil) of 6,812 pounds. The strap is 3.54 inches wide and 0.10 inch thick. The strap has a weight of 0.13 pound per foot. Standard rolls are 328 feet long. A Technical Data Sheet with MARV values is included in Appendix section 1.2.3.

1.2.4 NTPEP Report

An NTPEP evaluation of Paraweb was completed in August, 2018 for Linear Composites Limited, a Maccaferri subsidiary. The Laboratory Evaluation of Geosynthetic Reinforcement report, REGEO-2016-01, is attached in Appendix section 1.2.4.

1.2.5 Reinforcement Connection Details

A positive mechanical connection of the Paraweb to the facing unit is achieved using a Macbox, manufactured exclusively by Maccaferri. This consists of an HDPE box to create a cavity in the back of the block unit. A polymeric sleeve runs through the cavity and is sealed to the box with rubber bushings. A #5 bar is inserted through the Macbox in the back wall of the block unit (see Paraweb insert details in Appendix section 1.1.4). Paraweb straps are then run through the cavity from the back of the block and wrapped around the shielded #5 bar. A Macbox with rebar insert and a Paraweb strap is shown in Figure 5.

Additional information on the Macbox system is attached in Appendix section 1.2.5.

1.2.6 Connection Properties

Pullout tests on the Macbox insert were performed by TRI/Environmental, Inc. The tests were run with #5 Grade 60 rebar through the Macbox set in a 5-1/2 inch thick test block. The average tensile strength of 4 trials was 13,870 pounds. While this is a short-term ultimate strength, there are no load-bearing

© Stone Strong Systems

polymeric components. A creep reduction factor of 1.00 is used for the Macbox connector. Similarly, the steel bar is encased in concrete and shielded by the watertight connection box. The steel bar is not prone to corrosion, and a durability reduction factor of 1.00 is used for the Macbox connector.

The connection pullout test report is included in Appendix section 1.2.6. Note that the test report includes tests using polymeric reinforcing bars. Stone Strong only uses steel connection bars, and polymeric bars are not used with any Stone Strong products in the United States.

In addition to the pullout tests, calculations on the theoretical pullout capacity were run by Delta Engineers. Their calculation report is also attached in Appendix section 1.2.6. Their calculations determined slightly higher pullout loads for a lightly reinforced unit, and significantly higher loads for a more heavily reinforced block. Based on these calculations, the actual pullout tests were adopted as the controlling connection load. The pullout test values were adjusted for the actual concrete strength at the time of testing, compared to the design concrete strength for Stone Strong units.

The Paraweb strap is wrapped around the shielded bar inside of the Macbox connector. The bar diameter is nominally 1 inch. To evaluate possible strength reduction of the Paraweb in this tight bend, tension tests were performed by TRI/Environmental, Inc. These tests included ultimate tension tests to determine the average lot strength, and additional tests with the strap wrapped around a 1 inch diameter pin. This testing determined a reduction factor of 1.02 for the Paraweb strap in a 1-inch bend. The bend test results are attached in Appendix section 1.2.6.

The connection and strap strengths are summarized below:

	Nominal Value	Resistance Factor	Factored Value
Connection Strength - Paraweb 2D-50 Strap			
MARV ultimate strength (lb)	11,240	0.55	6,182
Creep reduced strength (lb)	8,264		
Durability reduction factor RF_D	1.15		
Reduction factor for 1" bend (T_{lot}/T_b)	1.02		
T_{crc}	7,045	0.55	3,875
Connection Strength - Macbox Pullout (2 strap legs)			
Pullout test (lb) (from TRI report)	13,870		
adjust test value for f'_c (4,000/4,105 = 97.4%)	13,515		
Calculated pullout (lb) (from Delta report)	14,000		
T_{crc} (min value, divided by 2 for single strap)	6,758	0.60	4,055
CR_{CR}			
Factored Paraweb strength controls			
T_{crc}/T_{ult}			0.63

© Stone Strong Systems

The factored strength of the Paraweb strap controls the design connection strength. The connection strength includes reductions for creep and durability as shown above. Therefore, creep and durability reduction factors of 1.00 are used for design.

1.2.7 Reinforcement Pullout Properties

Paraweb is treated as an extensible reinforcement. Since it is a solid strap without any cross fibers, the passive resistance term of the generalized pullout equation is neglected. The frictional resistance using the interaction coefficient, C_i, defined as follows:

$$F^* = C_i \tan \phi$$

Paraweb pullout tests were run for Maccaferri by SGI Testing Services. Test reports for these pullout tests are attached in Appendix section 1.2.7. A summary plot of the pullout test data is shown in Figure 12.

© Stone Strong Systems

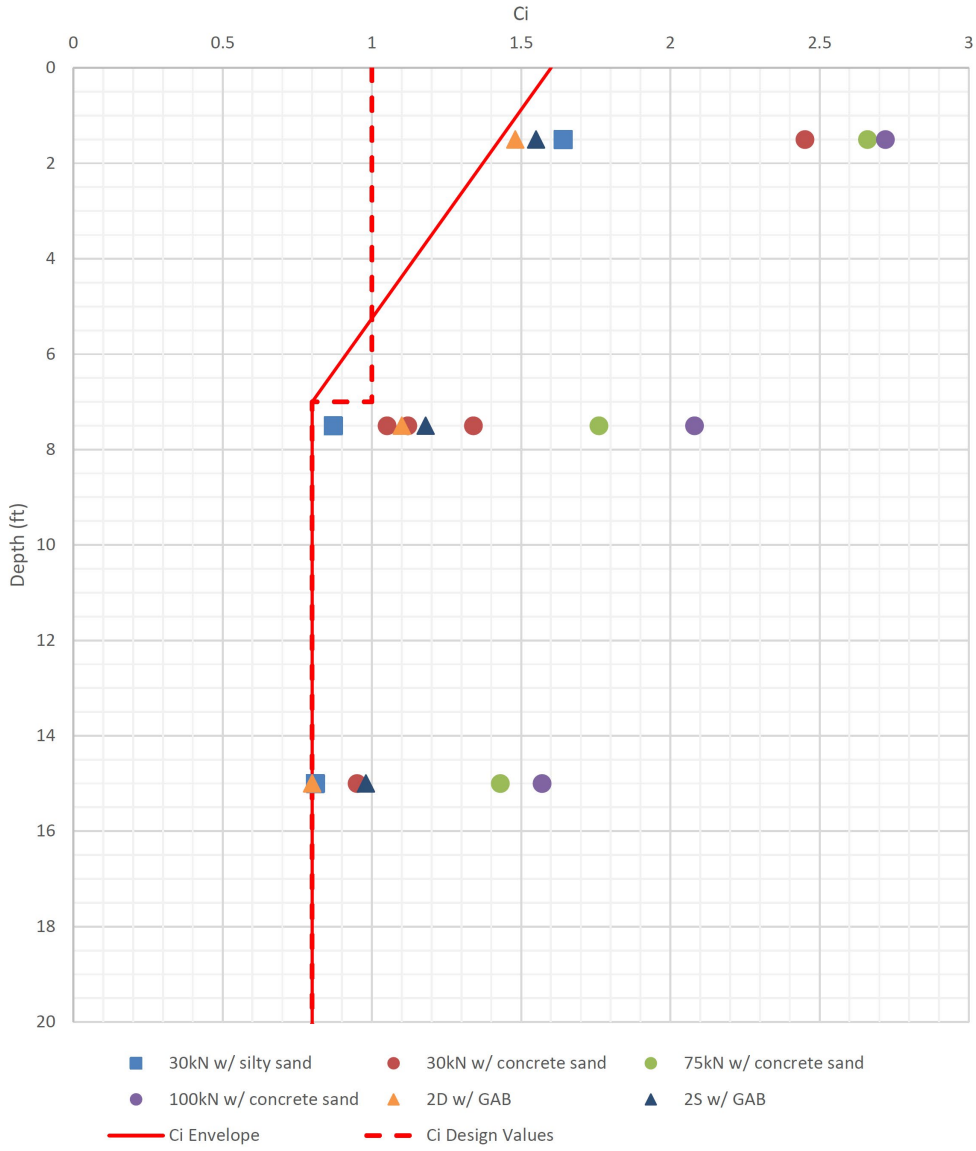

Figure 12 – Coefficient of Interaction with Depth (Pullout Tests)

Based on the test data, we recommend the following values for determining pullout resistance:

Backfill Type	Coefficient of Interaction		α
	Max Value at Zero Depth	Min Value at/below Critical Depth	
Silty Sand	1.0	0.8 Critical Depth = 7 ft.	0.8 (default)
Concrete Sand	1.0	0.8 Critical Depth = 7 ft.	0.8 (default)
Graded Aggregate Base	1.0	0.8 Critical Depth = 7 ft.	0.8 (default)

© Stone Strong Systems

Since the commonly used MSEW software does not accommodate a variable C_i for pullout resistance, we recommend stepped values for C_i based on depth, as shown in Figure 12. A C_i value of 1.0 is recommended for the top 7 feet of the wall, and a C_i value of 0.8 is recommended below the top 7 feet.

Stone Strong recommends a shape effect factor, α, of 0.80 for Paraweb straps based on the default value from NHI-10-024/025.

1.2.8 Direct Sliding Properties

Direct sliding tests were run for Maccaferri by SGI Testing Services. Test reports for these tests are attached in Appendix section 1.2.8. Based on these tests, we recommend a C_{ds} value of 0.7 to determine the direct sliding resistance at the soil/strap interface. The direct sliding coefficient, C_{ds}, is defined as follows:

$$\tan \rho = Cds \tan \phi$$

Based on this value, the following values of ρ are recommended:

ϕ	ρ
30°	22.0°
32°	23.6°
34°	25.3°

1.3 OTHER COMPONENTS

1.3.1 Other Innovations

The other system components provide for a complete, flexible, and adaptable system, but do not include specific innovations in this context.

1.3.2 Reinforced Soil

For MSE walls, select fill is generally required within the reinforced soil zone. They may consist of free-draining sands, well graded sand-gravel mixtures, or even crushed aggregate in some applications. Select fill would generally have less than 5 percent passing a #200 sieve, and would have a maximum size in the ¾ inch to 1½ inch range. An internal friction angle for the reinforced fill would typically be in the range of 30 to 35 degrees. Electrochemical properties of the backfill are not as critical as with steel reinforcement, but a pH range between 4.5 and 9 is recommended. The recommended range of select fill generally conforms to the AASHTO LRFD standard.

Random backfill behind the reinforced soil zone would typically consist of on-site soils.

© Stone Strong Systems

For gravity wall applications, random backfill materials may be used behind the facing units. This may consist of on-site sands, silts, or low-plasticity lean clays. Moderate to high-plasticity clays or organic soils are generally avoided as backfill in gravity wall applications. In some applications, a select backfill similar to a reinforced fill may be used within a 1H:1V influence zone behind a gravity wall. In some states/regions, crusher run or screened crushed aggregates are commonly used for backfill behind gravity retaining walls.

1.3.3 Drainage

Unsatisfactory behavior of any geotechnical feature is almost always accompanied by the presence of water. This is less likely to be caused by hydrostatic loading than by a change in soil strength or volume, revealing some deficiency in the original design (including failure to plan for moisture intrusion or the improper selection of shear strength parameters for design). It is critical to plan for change in soil moisture levels over the life of the retaining system, and to incorporate drainage provisions into the installation to avoid buildup of hydrostatic loads on the retaining wall. This is important for both MSE and gravity applications.

Stone Strong units are normally filled with drainage aggregate, providing for drainage at the facing in all applications. The alignment recess in the bottom of the units can accommodate placement of a perforated drain pipe within the facing zone, and this is a common approach for gravity wall applications. It is not required to place the drain tile within this recess, however, and drains may also be placed behind the facing units or at the back of the leveling pad. Drainage provisions may also include a chimney drain behind the units for channels and waterfront applications or a blanket drain in MSE applications.

In gravity wall applications with a cast in place tail extension, the tail extension can disrupt drainage and lead to weeping through the face of the wall above the tail extension. While this effectively prevents buildup of hydrostatic load on the wall system, it may be an aesthetic concern. When cast in place tail extensions taller than 3 feet are used, an additional drain tile is recommended immediately above the extension, typically placed behind the facing units.

1.3.4 Coping

Cast in place copings are not commonly used on Stone Strong walls, either in gravity or MSE applications. Top units are typically used when there is some flexibility in the grade above the wall, as shown in section 1.1.2.

Where the grade above the wall is less flexible, such as with a swale or walkway above the wall, Dual Face units can be used to create a short curb or a parapet. Alternate top treatments with a Dual Face units are shown in Figure 13.

© Stone Strong Systems

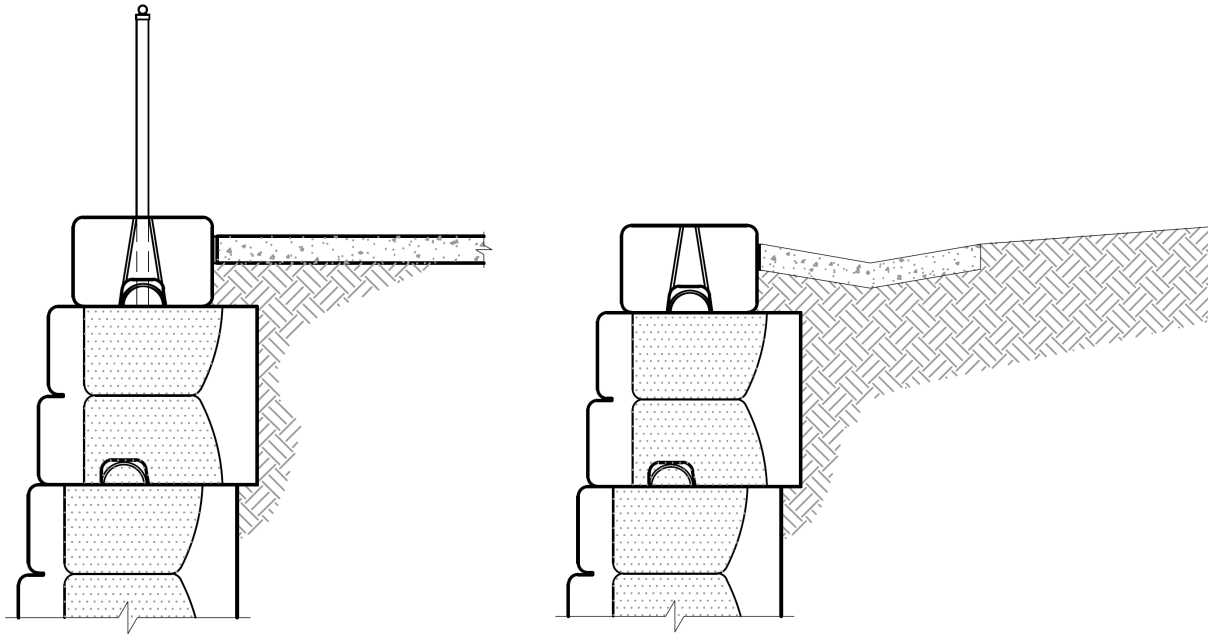

Figure 13 – Alternate Top Treatments with Dual Face Unit

The Custom Top Unit can also be used to function as coping at the top of either a gravity wall or MSE wall as shown in Figure 14. The CT Unit can be cast with a variable stem height, ranging from 6 inches to 30 inches above the base (24 inches to 48 inches total unit height), and the top can slope across the length of the unit. This allows the top the CT unit to follow the grade of a swale, walkway, or pavement located above the wall.

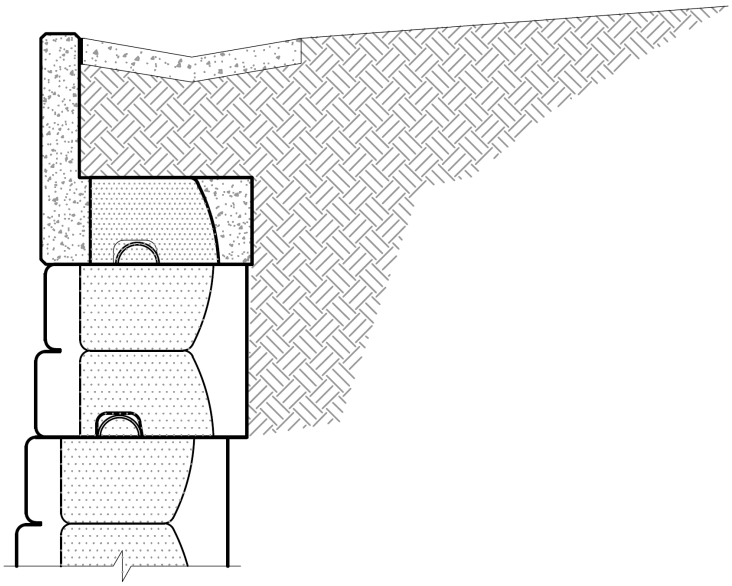

Figure 14 – Custom Top Unit with Concrete Swale

© Stone Strong Systems

1.3.5 Traffic Barriers

Traffic barriers are often required atop both gravity and MSE retaining walls. These include post and W-beam guardrails as well as concrete barriers with moment slabs. If the barrier system is installed within the influence zone of the retaining system, collision loads should be applied at the ground surface based on the AASHTO LRFD standard. Appendix section 1.3.5 includes typical moment slab and barrier details. The configuration and dimensions of the moment slab and barrier may be adjusted to match typical standard details for the specifying agency.

Post and beam guardrail systems are flexible systems that are expected to deflect significantly on impact. The posts will shear or deflect, and the W-beam transfers load along the system to additional posts while absorbing energy. The guardrail posts would typically be set behind the facing units, but in some cases, the guardrail posts may actually be installed within the voids of the block units. The face of the guardrail should be set a minimum of 3 feet from the face of the wall to allow for deflection, which may require larger offset blocks if the posts are installed within the block voids.

Concrete barrier and moment slabs are more rigid, self-supporting systems. The internal design of these systems is typically established outside of the scope of the retaining wall design. To allow for movement of the moment slab/barrier, and to avoid directly applying load to the wall facing, the moment slab and barrier should be isolated from the precast units. Isolation is usually provided by placing a 1 to 2 inch thick layer of polystyrene over the top of the precast wall units.

Examples of barriers with a moment slab are shown in Figure 15. Note that the coping configuration and dimensions may be adjusted to match typical standard details for the specifying agency. For a sloping pavement grade, the thickness of the concrete placed under the moment slab to the top of the wall units will potentially vary by 18 inches to accommodate steps in the top of the wall. This varying thickness can be exposed above the top of the precast wall units as shown in the first example, or a uniform thickness coping may be extended as a skirt over the facing units as shown in the second example.

© Stone Strong Systems

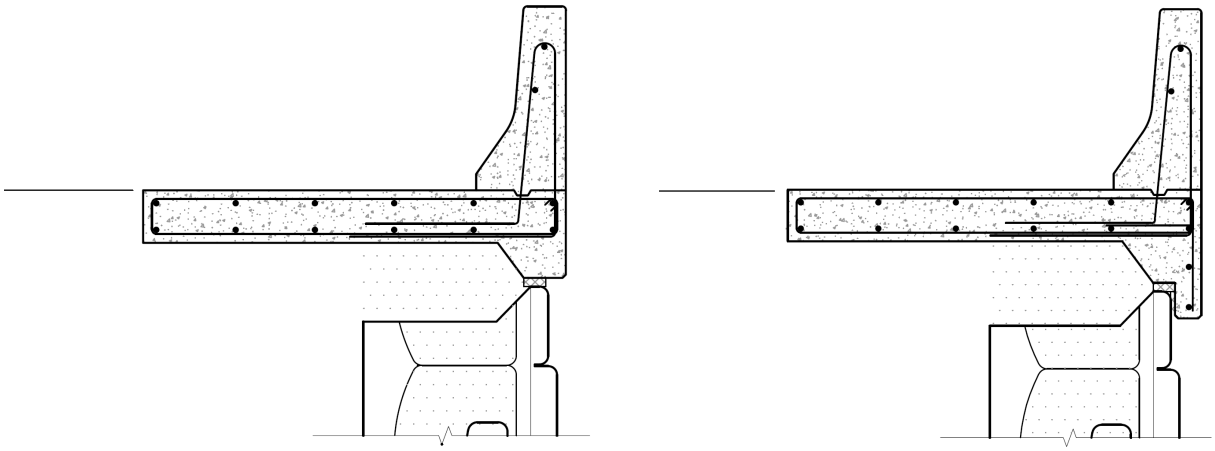

Figure 15 – Cast in Place Coping

Custom Top units can also be used in pavement applications. These units are custom produced with a sloping variable stem height that can follow the overlying pavement grade. This allows for a uniform thickness of moment slab above the wall. A moment slab can be placed flush to the face of the CT unit, or a skirt can be extended over the face of the CT unit to cover the separation joint as shown in Figure 16.

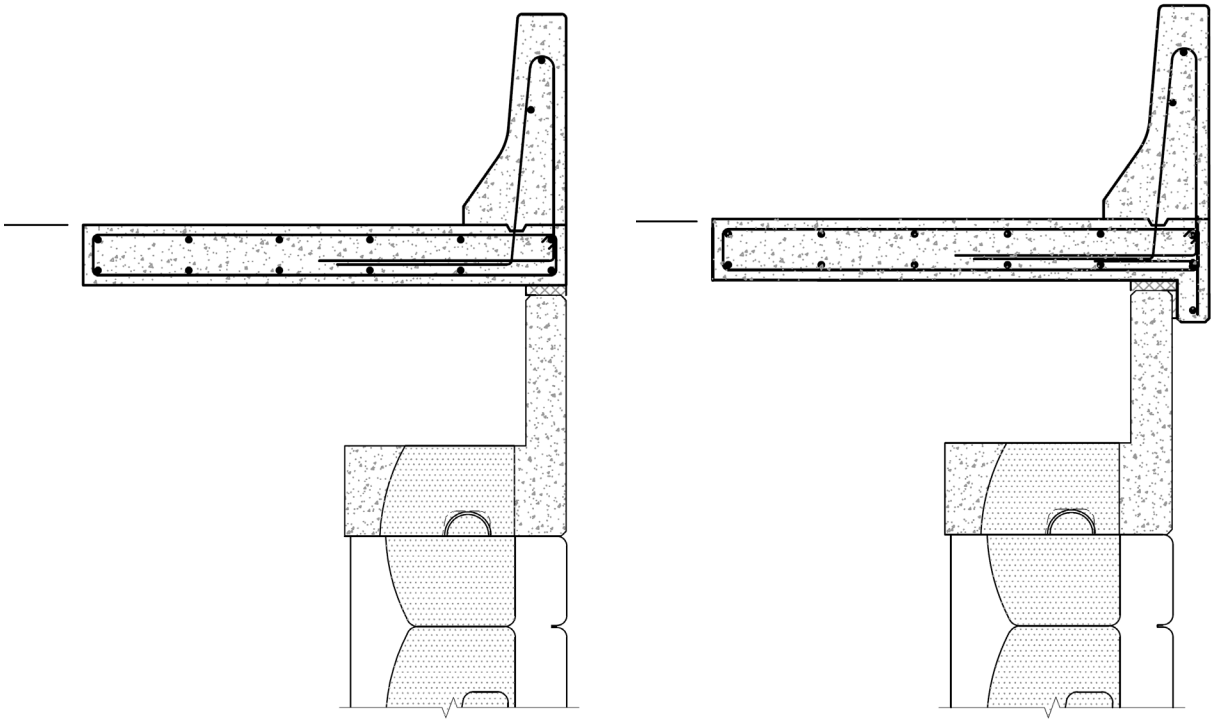

Figure 16 – Coping with Custom Top Unit

© Stone Strong Systems

1.3.6 Slip Joints

Slip joints can be provided as necessary within a wall elevation by using 6SF units to create an uninterrupted vertical joint as shown in Figure 17. A separate facing piece is not normally provided to cover the joint. Since some differential movement is expected across these joints, gaps greater than the normal tolerance of ¼ inch may develop within this vertical joint. Although the unit voids behind the joint are filled course drainage fill aggregate, a non-woven geotextile fabric is provided behind these joints to ensure that the course unit fill is retained in the event that larger gaps occur. See Appendix section 1.3.6 for additional details.

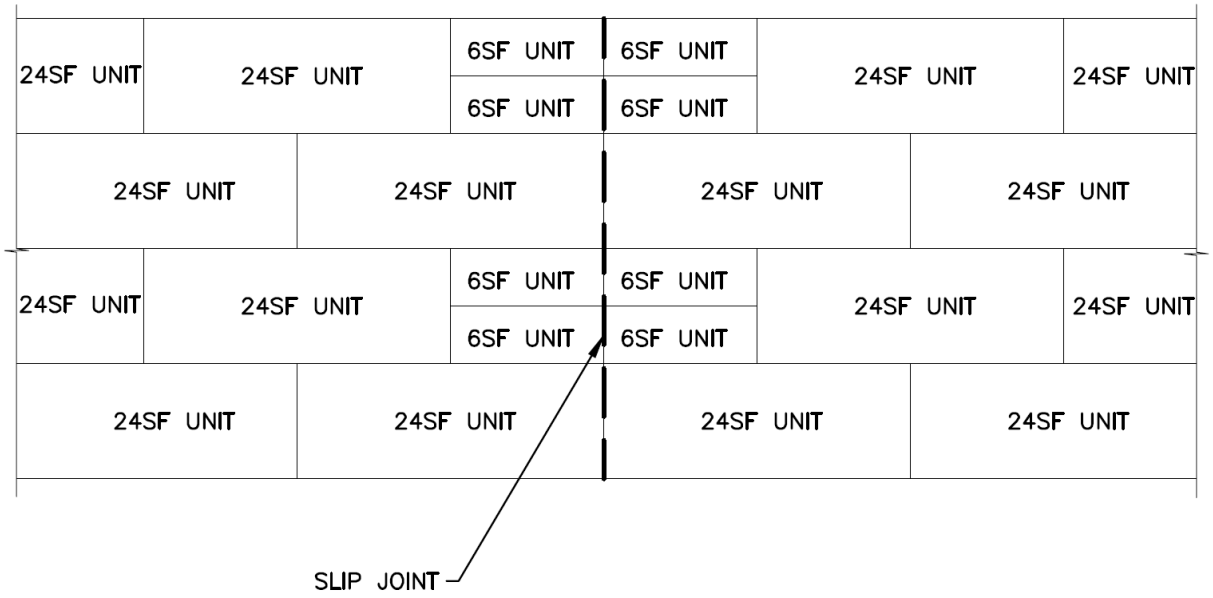

Figure 17 – Partial Wall Elevation View with Slip Joint

© Stone Strong Systems

SECTION 2: ERS DESIGN

2.1 DESIGN METHODOLOGY

2.1.1 Design Innovations

The analytical methods for design of gravity and MSE walls are intended to conform to the AASHTO LRFD standard. MSE analysis is done using MSEW software from ADAMA Engineering. Gravity wall analysis follows customary geotechnical concepts and practice.

A gravity wall analysis spreadsheet based on the Microsoft Excel platform is distributed by Stone Strong to perform gravity wall stability calculations. The spreadsheet includes an LRFD version that incorporates the methodology in the following section of this submittal. This spreadsheet can be downloaded through the Stone Strong website (http://www.stonestrong.com/form/gated_asset), but requires user registration for tracking and to allow for notification of periodic updates to the spreadsheet.

The gravity analysis spreadsheet utilizes a Coulomb trial wedge method for resolving complex boundary and surcharge condition above the wall. The wedge trials are iterated separately for gravity and seismic load cases. Separate individual trial wedge analysis is performed for internal stability at each unit interface.

2.1.2 Design Methodologies

MSE analysis is done using MSEW software from ADAMA Engineering. The software adheres to the AASHTO LRFD standard. The methodology is documented in the User Manual and is not replicated here.

When selecting modular facing with geosynthetic reinforcement, MSEW assumes that the reinforcement extends to the front of the facing element. To account for the typical 44 inch facing width, the calculated effective reinforcing lengths are adjusted. The connection point is roughly 3 inches inside of the back surface of the facing unit. In addition, the angled layout of the Paraweb strap results in a length measured perpendicular to the wall face that is 1 to 3 inches less than the angled strap length. Therefore, the effective reinforcing lengths from the MSEW calculations are reduced by 3.0 feet to determine the required strap lengths for installation. This value should be adjusted for different width facing units, if used.

Documents describing gravity wall analysis are attached in Appendix section 2.1.2. The LRFD Gravity Wall Design Methodology provides detailed description of the calculation of forces and the evaluation of load cases. The methodology includes citations to the AASHTO standard and NHI-10-024/025. Example calculations are also provided to demonstrate the methodology. Finally, spreadsheet output is included for verification and for demonstration. Note that the engineering approach presented here has not materially changed from that presented in the 2010 HITEC review. The techniques have been

© Stone Strong Systems

updated follow the LRFD standard, but the calculation of driving/resisting forces and other engineering principles remain as previously reviewed.

2.1.3 Reinforcement Obstructions

While it is a good design practice to avoid obstructions within the reinforced soil zone of an MSE wall, some exceptions are unavoidable. These would include pile or pier foundations for bridge abutments located shortly behind the face of an MSE wall.

The first design approach for handling obstructions is to construct the section affected by conflicts as a gravity wall. While this may require a fairly large tail extension or a significant number of larger precast units, it is often a simpler and more robust approach.

Where a gravity wall is not practical due to height or other considerations, the Paraweb reinforcement is very flexible and can be splayed around small to moderately sized obstructions. Further, since Paraweb is a polymeric material, there is minimal concern over electrochemical deterioration if the reinforcement is in contact with metal obstructions such as piling or protective sleeves. Although the Paraweb straps are capable of severe distortions around obstacles, a maximum deviation of 15 degrees is suggested to keep the reinforcement relatively perpendicular to the direction of load.

Typical obstruction details are provided in Appendix section 2.1.3.

2.2 DESIGN EXAMPLE

2.2.1 MSE Design Problem 1 (C1 Checklist)

MSEW output is provided in Appendix section 2.2.1 for Problem 1 from checklist C1, as shown in Figure 18. The wall was analyzed as 31 feet tall, to include a 12 inch thick coping/moment slab. A barrier load was also analyzed using NHI-10-024/25 option.

© Stone Strong Systems

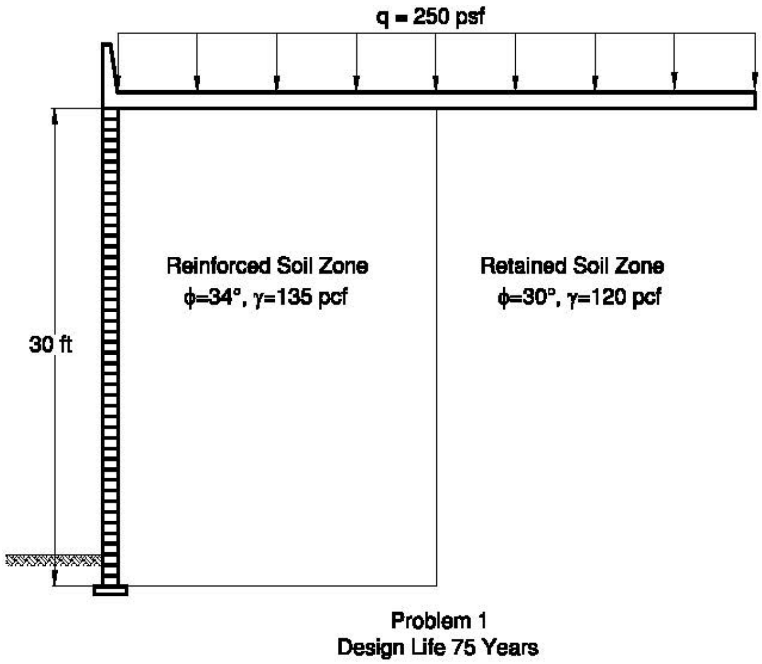

Figure 18 – Problem 1 (C1 Checklist)

2.2.2 MSE Design Problem 2 (C1 Checklist)

MSEW output is provided in Appendix section 2.2.2 for Problem 2 from checklist C1, as shown in Figure 19. The 30 feet tall wall was analyzed with a 2H:1V backslope from the back of the top unit.

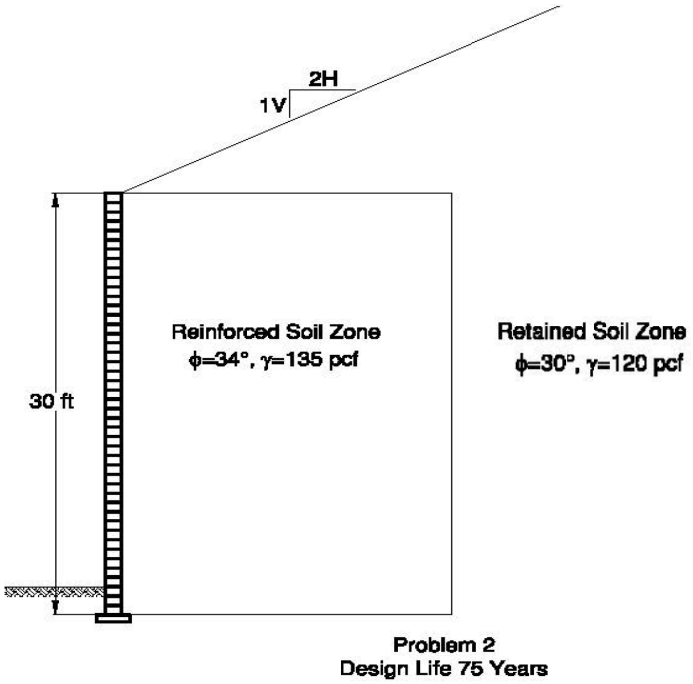

Figure 19 – Problem 2 (C1 Checklist)

© Stone Strong Systems

2.2.3 Gravity Design Problem 1 (C7 Checklist)

Spreadsheet output is provided in Appendix section 2.2.3 for example Problem 1 from checklist C7, as shown in Figure 20. The wall was analyzed as 13 feet tall, to include a 12 inch thick coping/moment slab. A barrier load was also analyzed in Extreme II load case (CT). External stability analysis is provided, which includes a check of internal stability at each block joint. Separate internal stability analysis is included to provide complete output at each unit interface, 9 feet, 6 feet, and 3 feet below the coping/moment slab.

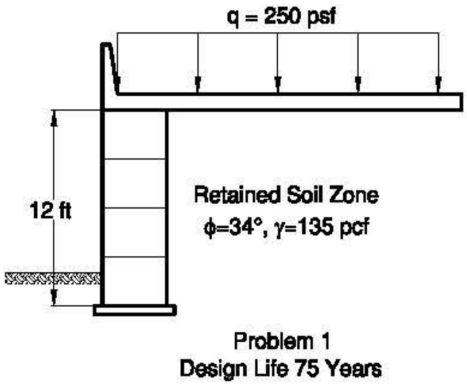

Figure 20 – Problem 1 (C7 Checklist)

2.2.4 Gravity Design Problem 2 (C7 Checklist)

Spreadsheet output is provided in Appendix section 2.2.4 for example Problem 2 from checklist C7, as shown in Figure 21. The 12 feet tall wall was analyzed with a 2H:1V backslope from the back of the top unit. A slope break was set beyond the influence based on trial wedge analysis. External stability analysis is provided, which includes a check of internal stability at each block joint. Separate internal stability analysis is included to provide complete internal analysis output at each unit interface, 9 feet, 6 feet, and 3 feet below the top of wall.

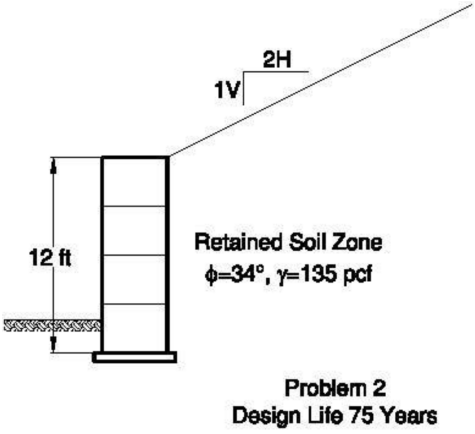

Figure 21 – Problem 2 (C7 Checklist)

© Stone Strong Systems

SECTION 3: CONSTRUCTION

3.1 CONSTRUCTION PROCEDURES

3.1.1 Construction Innovations

The wall system is configured for high-productivity installation, but does not include specific innovations in this context.

3.1.2 Installation Manual

The Stone Strong Field Construction Manual is included in Appendix section 3.1.2.

3.1.3 Facing Unit Installation

Precast modular facing units for either a gravity wall or MSE wall are typically installed on running bond, where each unit is approximately centered over the joint between units in the preceding course. However, the units may be installed on stack bond where required for aesthetic (e.g. complex face pattern) or technical (e.g. differential settlement) reasons. Note that a stack bond, where units are placed directly above the units in the preceding course, is not recommended for battered units on a curved alignment. The units may also be installed on partial or odd bond patterns to accommodate specific applications.

The recess in the bottom of the unit fits over the lift/alignment loop in the preceding course. This mechanism sets the facing setback, typically either vertical or battered at 6.3 degrees. For battered facing on curves, the arc length of each course will vary as the setback between units changes the radius by 2 to 4 inches per course. Over a curve of approximately 40 degrees, the length will vary by roughly 3 inches per course and the recess will no longer engage the alignment loop. This is only a minor concern, as the unit shear only relies on aggregate interlock through the block voids. In this occurrence, the block batter can be manually set by measuring or aligning the back of the units. In the case of any vertical intersections, such as a corner, slip joint, or abutting structure, the units may be trimmed with a concrete saw.

3.1.4 Facing Installation on Curved Sections & Corners

Stone Strong precast modular facing units have tapered sides to accommodate installation on curves. The 24SF units (including 24-86, 24-62, and 24-ME units) can be installed on convex or concave radius of approximately 60 feet. The facing units can be transitioned to 6SF units for installation on convex or concave radius of approximately 20 feet. See section 1.1.14 and details in Appendix section 3.1.4. No modifications are required to the facing units except the occasional requirement to trim a unit to length on a battered wall with a vertical intersection adjacent to a curve.

There are several different options for constructing corners, depending partly on whether the wall has a battered or vertical face. For vertical faces, the 90° Corner Unit works well for inside and outside

© Stone Strong Systems

corners. Similarly, the 45° Corner Unit is well suited to vertical face configurations. These corner units work well with battered walls of modest heights, typically 12 feet or less. For taller battered walls, the Inside Corner and Outside Corner units are cast in differing sizes for each course of the wall to accommodate batter of both faces. Other options include laced inside corners and outside corners using the End/Corner Unit. Corner facing details are provided in Appendix section 3.1.4.

3.1.5 Reinforcement Installation on Curved Sections & Corners

On a straight alignment, Paraweb reinforcing straps are laid out in V-shapes spaced 4 feet on center, with the ends overlapping on the same spacing. In a curved alignment, the ends of the straps are spaced closer or further apart. On very tight convex curves, it becomes impractical to maintain a uniform spacing, and the straps are laid in an overlapping fashion. Layout details for Paraweb straps on straight alignments, curved alignments, and on corners are provided in Appendix section 3.1.5.

3.1.6 Facing Alignment

Once the first course of units is aligned and leveled, very little effort is required to maintain the design horizontal and vertical alignment of the face. Stone Strong units are produced to very tight tolerances (±1/8 inch for height and length dimensions). Because of these close tolerances, the units set neatly and shimming is not required or recommended during installation. The alignment loops and recess provide rapid alignment to similar tolerances. In addition, the units are very robust and are not prone to defection or displacement during placement and compaction of backfill.

It is good practice to periodically check that the block units are level during installation and check that the alignment and batter are maintained. The alignment and batter can be adjusted by pulling units back rather than pushing them forward after setting over the alignment loops and prior to filling with unit fill. For larger adjustments, the lifting loops can be cut off or bent to allow changes to the alignment or batter.

3.1.7 Backfill Placement

Fill within the reinforced zone and the retained zone (for both MSE walls and gravity walls) should be placed and compacted in a controlled manner. Select fill should be used within the reinforced zone limits and within the influence zone, typically 1H:1V, when specified for a gravity retaining wall. Lift thicknesses should be limited based on the compaction equipment and the type of material, but reinforced fill should generally be placed in lifts not exceeding 8 inches thick. All fill, both select and retained/random, should be compacted to a minimum of 95 percent of the maximum dry density (ASTM D698, Standard Proctor). Moisture sensitive materials should have the moisture content controlled near optimum based on the specific material, but generally within -2 to +3 percent of optimum moisture content. Project or agency specific requirements that are more stringent than these general guidelines should be followed.

© Stone Strong Systems

Compaction equipment may operate directly behind the precast modular units. No zone of reduced compaction should be permitted behind the facing.

3.1.8 Erosion During Construction

The contractor should provide temporary grading including swales and ditches to prevent runoff from entering the excavation and to direct surface water within the excavation away from the wall face.

3.1.9 Installer Qualifications

Stone Strong does not establish minimum qualifications for wall installers. On-site installation support is available through the local dealer/producers, and technical support can also be provided through Stone Strong LLC.

© Stone Strong Systems

SECTION 4: QUALITY CONTROL

4.1 MANUFACTURING

4.1.1 Facing Production Quality Control

The Stone Strong QA/QC Manual is attached in Appendix section 4.1.1.

4.1.2 Reinforcement Manufacture Quality Control

The Manufacturers Quality Control for Paraweb Reinforcement is attached in Appendix section 4.1.2.

4.1.3 Connection Manufacture Quality Control

The reinforcing bar through the Macbox connector is the critical component of the connection system. Placement and positioning of internal reinforcement is covered in the Stone Strong QA/QC Manual.

4.2 CONSTRUCTION

4.2.1 Construction Quality Control

Quality control during construction is addressed in the QA/QC Manual (see Appendix section 4.1.1) and in the Field Construction Manual (see Appendix section 3.1.2). In addition, construction quality control should be addressed in the project specification. The Stone Strong guide specification is included in Appendix section 4.2.1.

© Stone Strong Systems

SECTION 5: PERFORMANCE

5.1 PERFORMANCE HISTORY

5.1.1 System Development and Usage

Stone Strong precast modular retaining wall units were originally developed in 2002 and 2003. The product was first licensed to a dealer in 2003, and the first commercial retaining walls were completed in early 2004. At that time, only the standard 44 inch width 24SF and 6SF units were available, along with the Corner/End unit.

Over the ensuing years, additional dealers have been added and additional products have been developed. The Dual Face unit debuted in 2005. The 90 Degree Corner and 45 Degree Corner followed in 2006. The extended width units, 24-86 and 24-62, were released in 2010, expanding the limits of gravity wall installations using only precast elements. The reduced width 6-28 unit was added in 2014, rounding out the suite of variable width precast units.

There are currently 38 licensed dealers located primarily in North America, but extending to the south Pacific region. These licensees produce and stock wall units in 40 or more fixed precast plants plus temporary satellite locations.

The original market for Stone Strong precast modular retaining walls was private development and commercial projects. The system has also gained widespread acceptance with public clients, including state transportation departments, provincial transport ministries, and local county/municipal entities across the US and Canada.

Over the past 18 years, millions of square feet of Stone Strong facing have been installed. A large percentage of the walls have been gravity retaining structures, but a significant percentage of MSE walls have also been erected. Historically, the majority of the MSE walls have used geogrid reinforcement. The first Paraweb reinforced MSE wall was constructed in New Zealand in 2015. The first Paraweb reinforced MSE wall in the US was built in 2018.

5.1.2 Oldest 3 Structures

The oldest 3 Stone Strong gravity wall installations, excluding minor or demonstration installations, are listed as follows, including facing area and year of original construction:

- Quarry Place, Milford, Massachusetts, 11,370 square feet, installed in 2004
- Westfield Shopping Center, Lincoln, Nebraska, 2,160 square feet, installed in 2004
- Harrison Street Reconstruction, Omaha, Nebraska, 17,430 square feet, installed in 2004-2005

© Stone Strong Systems

The oldest 3 MSE wall installations are listed as follows, including facing area and year of original construction (these wall utilized geogrid reinforcement):

- Thayer Academy, Braintree, Massachusetts, 9,580 square feet, installed in 2004
- Oak Point Phase 6, Middleboro, Massachusetts, 27,040 square feet, installed in 2004
- Central Catholic High School, Lawrence, Massachusetts, 2,850 square feet, installed in 2005

The oldest 3 MSE walls using Paraweb reinforcement are listed as follows, including facing area and year of original construction (only US projects included):

- West Dodge Off-Ramp, Omaha, Nebraska, 5,000 square feet, installed in 2018
- Southern Connector Road, Douglas County, Colorado, 1,750 square feet, installed in 2019
- Ridgefield Main Avenue, Clark County, Washington, 2,840 square feet, installed in 2019

5.1.3 Tallest 3 Structures

The tallest 3 gravity wall installations are as follows, including peak height and type of extended block units:

- Office Building, Shelton, Connecticut, 28.5 feet tall, cast in place tail extensions, installed in 2007
- Eagle Ridge Apartments, Colorado Springs, Colorado, 19.5 feet tall, precast 24-86 units, installed in 2016
- Confidential government installation, Maryland, 36 feet tall, cast in place tail extensions behind 24-86 units, installed in 2017

The tallest 3 MSE wall installations are as follows, including maximum height and configuration:

- Route 15, Steuben County, New York, 54 feet tall, geogrid reinforced, single tier
- Foothills Parkway, Great Smokey Mountain National Park, Tennessee, 70 feet tall, geogrid reinforced, 2 tiers
- Rutland Airport, Rutland, Vermont, 63 feet tall, geogrid reinforced, 2 tiers

5.1.4 Agency/Owner Approvals

Stone Strong is currently approved by 17 state DOTs. In addition, Stone Strong is accepted by numerous county and municipal agencies that do not have formal approval processes. The following is a listing of state DOT approvals:

© Stone Strong Systems

State	DOT Approved	DOT Approved Date	Product Group
Alabama	Yes	7/11/2011	Gravity Wall Systems II-28
Georgia	Yes	10/7/2008	QPL-4 Misc. Precast Products
Florida	Yes	2009 & 5/27/2020	548 - Retaining Wall Systems
Illinois	Yes	11/24/2008	Structural Systems/Precast Modular Retaining Walls
Kansas	Yes	2/3/2006	40.5 - Landscape Retaining Wall Systems
Maine	Yes	11/1/2010	Wet Cast Small Landscape Block Wall
Maryland	Yes	6/2009 & 5/2020	450 - Retaining Walls
Massachusetts	Yes	6/2009	Precast Concrete Producers
Nebraska	Yes	2008	MSE Walls/Modular Bock Facing Units - 715
New Jersey	Yes	4/7/2006	Precast Concrete Retaining Walls, Modular (904.02)
New York	Yes	3/23/2006	Precast Concrete Wall Units - 704-06
Pennsylvania	Yes	11/2010	MISC Precast Concrete Products
South Dakota	Yes	3/2010	Earth Retaining Structures and Systems
Tennessee	Yes	6/2009	38 - Retaining Walls
Texas	Yes	4/2010	Concrete Block Retaining Wall Systems
Virginia	Yes	11/19/2009	Concrete Precast Producers
West Virginia	Yes	2019	MSE Modular Block Wall Systems - 626.002.003

Stone Strong is widely accepted by private commercial users and institutional users. Stone Strong has been successfully used in land development, retail, education, and infrastructure projects across North America.

© Stone Strong Systems

SECTION 6: OTHER INFORMATION

6.1 OTHER INFORMATION

No other information is presented at this time.

© Stone Strong Systems

Appendix

Innovations, Developments, Enhancement and Advancements (IDEA) Program

Stone Strong
Precast Modular Retaining Wall System

January 8, 2021

© Stone Strong Systems

Appendix Contents

1.1.1 FACING INNOVATIONS

1.1.2 FACING COMPONENTS

1.1.3 COMPONENT SPECIFICATIONS

1.1.4 REINFORCEMENT CONNECTION

1.1.5 UNIT DIMENSIONS AND TOLERANCES

1.1.6 UNIT FABRICATION

1.1.7 CONCRETE COMPRESSIVE STRENGTH

1.1.8 FACING UNIT ABSORPTION

1.1.9 CONCRETE AIR CONTENT

1.1.10 INTERFACE SHEAR PROPERTIES

1.1.11 ALIGNMENT DETAILS

1.1.12 FILTRATION

1.1.13 FACE PATTERNS

1.1.14 CURVES AND CORNERS

1.2.1 REINFORCEMENT INNOVATIONS

1.2.2 REINFORCEMENT TYPE

1.2.3 REINFORCEMENT PROPERTIES

1.2.4 NTPEP REPORT

1.2.5 REINFORCEMENT CONNECTION DETAILS

1.2.6 CONNECTION PROPERTIES

1.2.7 REINFORCEMENT PULLOUT PROPERTIES

1.2.8 DIRECT SLIDING PROPERTIES

1.3.1 OTHER INNOVATIONS

1.3.2 REINFORCED SOIL

1.3.3 DRAINAGE

1.3.4 COPING

© Stone Strong Systems

1.3.5 TRAFFIC BARRIERS

1.3.6 SLIP JOINTS

2.1.1 DESIGN INNOVATIONS

2.1.2 DESIGN METHODOLOGIES

2.1.3 REINFORCEMENT OBSTRUCTIONS

2.2.1 MSE DESIGN PROBLEM 1 (C1 CHECKLIST)

2.2.2 MSE DESIGN PROBLEM 2 (C1 CHECKLIST)

2.2.3 GRAVITY DESIGN PROBLEM 1 (C7 CHECKLIST)

2.2.4 GRAVITY DESIGN PROBLEM 2 (C7 CHECKLIST)

3.1.1 CONSTRUCTION INNOVATIONS

3.1.2 INSTALLATION MANUAL

3.1.3 FACING UNIT INSTALLATION

3.1.4 FACING ON CURVED SECTIONS & CORNERS

3.1.5 REINFORCEMENT ON CURVED SECTIONS & CORNERS

3.1.6 FACING ALIGNMENT

3.1.7 BACKFILL PLACEMENT

3.1.8 EROSION DURING CONSTRUCTION

3.1.9 INSTALLER QUALIFICATIONS

4.1.1 FACING PRODUCTION QUALITY CONTROL

4.1.2 REINFORCEMENT MANUFACTURE QUALITY CONTROL

4.1.3 CONNECTION MANUFACTURE QUALITY CONTROL

4.2.1 CONSTRUCTION QUALITY CONTROL

5.1.1 SYSTEM DEVELOPMENT AND USAGE

5.1.2 OLDEST THREE STRUCTURES

5.1.3 TALLEST THREE STRUCTURES

5.1.4 AGENCY/OWNER APPROVALS

6.1 OTHER INFORMATION

© Stone Strong Systems

1.1.1 FACING INNOVATIONS

No attachments

© Stone Strong Systems

1.1.2 FACING COMPONENTS

No attachments

© Stone Strong Systems

1.1.3 COMPONENT SPECIFICATIONS

Technical Memorandum TM-2018-01
Block Reinforcement Details
Structural Modeling and Design Calculations

© Stone Strong Systems

TM-2018-01 **Date: 3/30/18**
(supersedes TM-2013-01 and TM-2013-02) Total Pages: 2

Technical Memorandum

Subject: Steel reinforcement in Stone Strong precast modular wall units

Technical Information:

Stone Strong 24SF and 6SF units are designed to be unreinforced in typical gravity wall applications. The thickness of the webs and flanges provide structural integrity for normal gravity wall applications with these units. All extended units (24-86, 24-62, and 24-ME) are required to be reinforced in all applications, and reinforcement is required in many MSE applications as shown in the accompanying tables.

Stone Strong Systems has investigated MSE retaining walls using 24SF units and have found some instances of cracking in the lower portion of tall walls. Our evaluation has determined that minor yielding in the foundation results in differential movement of the units in the lower course. This causes cracks to develop in one or more courses above the bottom course. This typically does not affect the structural integrity of the 24SF unit or the wall system, but can have an aesthetic impact. In taller walls, reinforcement is necessary to ensure the structural integrity of the units.

For MSE walls using Paraweb reinforcement, all units should be reinforced and heavy duty (HD) reinforcement should be used below prescribed heights based on the type of unit. Rebar is necessary in the back face of 24SF, 6SF, and 6-28 units as part of the Paraweb connector. Standard reinforcement in 24SF-Paraweb units will also include a steel mesh or rebar cage in the face and webs. For 24SF-HDParaweb units between 36 and 51 feet (11.0 to 15.5 m) below the top of wall, HD reinforcement should also include a steel mesh or rebar cage within the back face. For 6SF-HDParweb or 6-28-HDParaweb units between 12 and 51 feet (3.7 to 15.5 m) below the top of wall, HD reinforcement should include a mesh or rebar cage in the face and webs.

For MSE walls using geogrid reinforcement over 12 feet (3.7 m) in height and less than 30 feet (9.1 m) in height, internal reinforcement shall be utilized in all 24SF units below the top 12 feet (3.7 m) of the wall. A reinforcement cage consisting of steel mesh or rebar should be placed in the face and webs of 24SF-Reinforced units. Stone Strong recommends that project specific guidance be provided for geogrid reinforced MSE walls over approximately 30 feet (9.1 m).

Reinforcing details are provided in the Production Manual for 24SF-Reinforced, 24SF-Paraweb, 24SF-HDParaweb, 6SF-Paraweb, 6SF-HDParaweb, 6-28-Paraweb, 6-28-HDParaweb, 24-86, 24-62, and 24-ME units. Options are provided for both steel mesh and rebar options, where applicable. Stone Strong Systems recommends that designers indicate types of reinforced or HD reinforced blocks where required on shop drawings or installation drawings for MSE walls.

Gravity Wall Applications

Unit Type	All Heights
24SF	24SF
6SF	6SF
6-28	6-28
24-62	**24-62**
24-86	**24-86**
24-ME	**24-ME**

Paraweb MSE Applications

Unit Type	Depth Below Top of Wall		
	0-12 feet (0-3.7 m)	12-36 feet (3.7-11.0 m)	36-51 feet (11.0-15.5 m)
24SF	**24SF-P**	**24SF-P**	**24SF-HDP**
6SF	**6SF-P**	**6SF-HDP**	**6SF-HDP**
6-28	**6-28-P**	**6-28-HDP**	**6-28-HDP**
Note: If a gravity section is included at the top of the wall (hybrid applications), gravity units may follow the gravity application table			

Geogrid MSE Applications

Unit Type	Depth Below Top of Wall	
	0-12 feet (0-3.7 m)	12-30 feet (3.7-9.1 m) **
24SF	24SF	**24SF-R**
6SF	6SF	6SF
6-28	6-28	6-28
** Project specific guidance is recommended for geogrid reinforced MSE walls over 30 feet tall		

(In all tables, light shading indicates reinforced units, dark shading indicates HD reinforced units)

NOTES:
1. ALL MESH SHALL BE W8xW8–6x6 WWF PER ASTM A185/A497/A1064, GRADE 65 U.N.O.
2. USE IN ALL 24–86 UNITS.

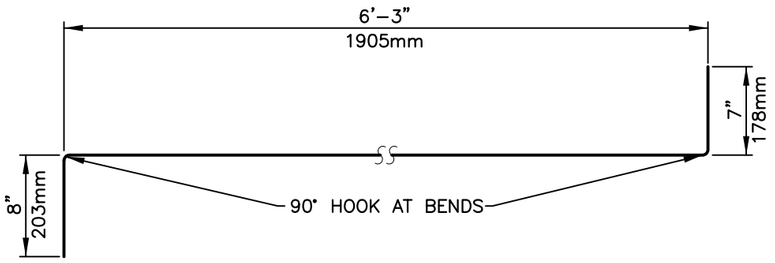

BENT WEB MESH – PLAN VIEW

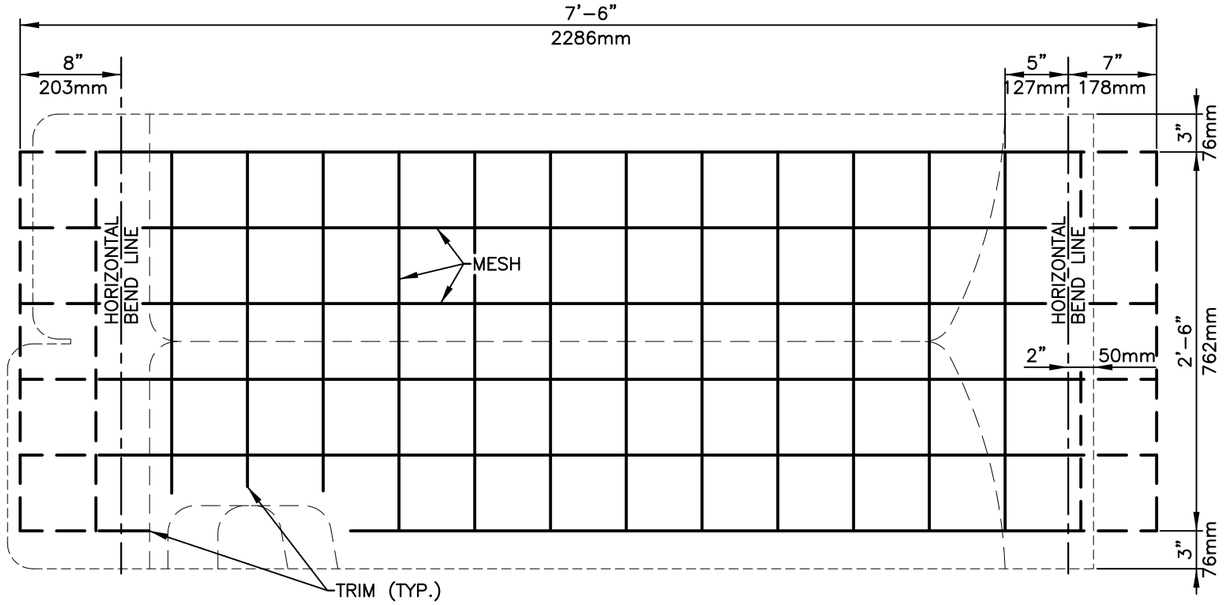

BENT WEB MESH (2 REQUIRED)

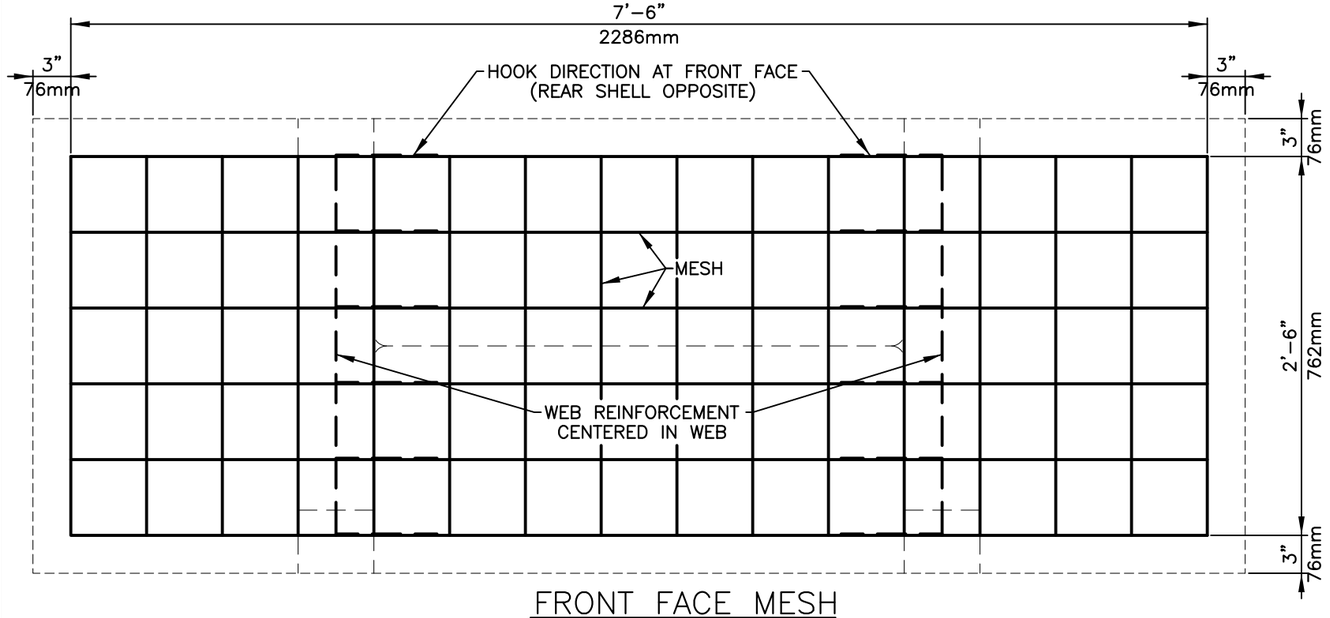

FRONT FACE MESH

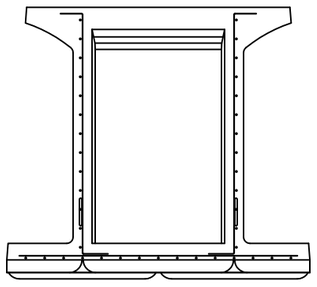

24–86 UNIT (24–86) – MESH OPTION

NOT TO SCALE

DISCLAIMER:
These typical details are preliminary and conceptual in nature. They are provided for general information purposes only. Anyone making use of these details and related information does so at their own risk and assumes all liability for such use. Site specific design should be performed by a licensed Professional Engineer who is familiar with the actual site conditions, materials, and local practices.

Thiele Geotech, Inc. and Stone Strong LLC are the authors of these drawings and retain all common law, statutory, and other reserved rights including the copyright. Limited license is granted to copy, reproduce, or modify the details to prepare construction drawings for Stone Strong retaining walls. Thiele Geotech, Inc. and Stone Strong LLC make no warranties, either expressed or implied, of merchantability or fitness for any particular purpose, and accept no responsibility for the accuracy, suitability, or completeness of information contained herein.

STONE STRONG SYSTEMS®
www.stonestrong.com

PROJECT
REINFORCING DETAILS
STONE STRONG SYSTEMS

DATE: 6/29/18 | FILE: 01_24–86 Mesh

NOTES:
1. ALL STEEL SHALL BE #4 BARS, GRADE 60, U.N.O.
2. USE IN ALL 24–86 UNITS.

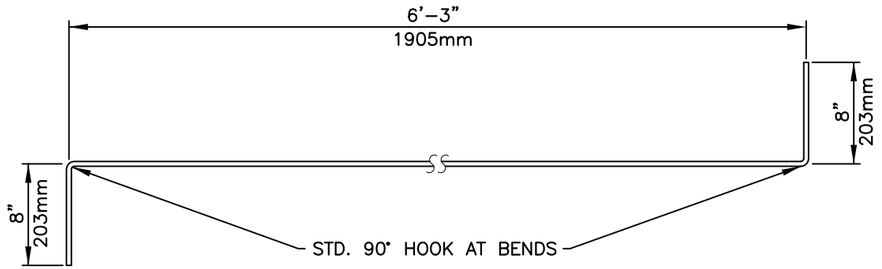

BENT WEB REBAR – PLAN VIEW

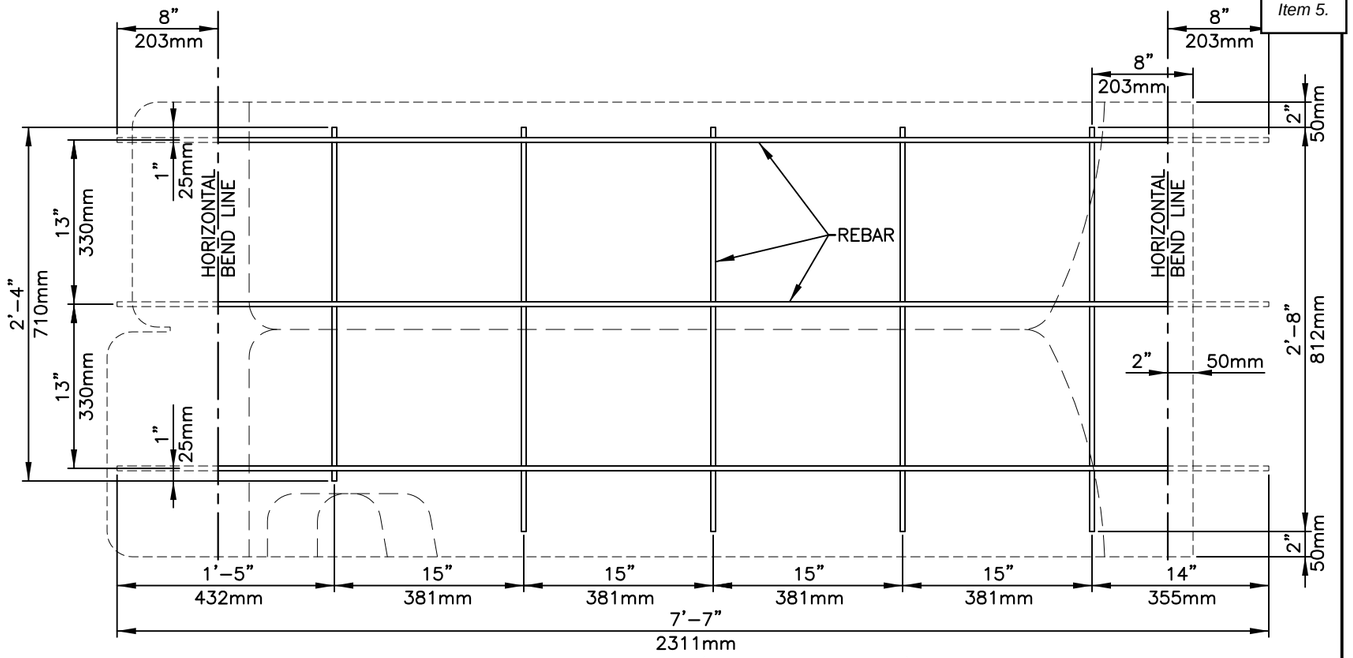

BENT WEB REBAR (2 REQUIRED)

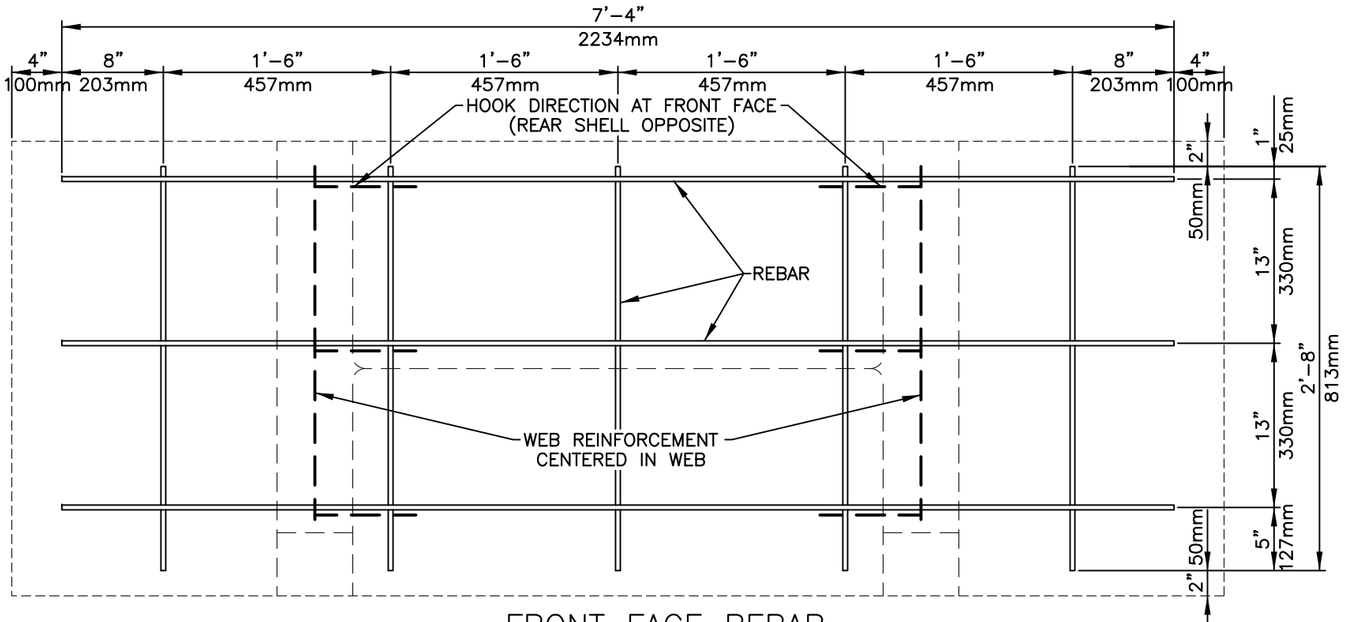

FRONT FACE REBAR

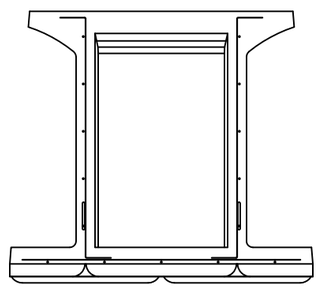

24–86 UNIT (24–86) – REBAR OPTION

NOT TO SCALE

DISCLAIMER:
These typical details are preliminary and conceptual in nature. They are provided for general information purposes only. Anyone making use of these details and related information does so at their own risk and assumes all liability for such use. Site specific design should be performed by a licensed Professional Engineer who is familiar with the actual site conditions, materials, and local practices.

Thiele Geotech, Inc. and Stone Strong LLC are the authors of these drawings and retain all common law, statutory, and other reserved rights including the copyright. Limited license is granted to copy, reproduce, or modify the details to prepare construction drawings for Stone Strong retaining walls. Thiele Geotech, Inc. and Stone Strong LLC make no warranties, either expressed or implied, of merchantability or fitness for any particular purpose, and accept no responsibility for the accuracy, suitability, or completeness of information contained herein.

STONE STRONG SYSTEMS®
www.stonestrong.com

PROJECT
REINFORCING DETAILS
STONE STRONG SYSTEMS

DATE: 6/29/18 | FILE: 02_24–86 Rebar

NOTES:

1. ALL MESH SHALL BE W8xW8–6x6 WWF PER ASTM A185/A497/A1064, GRADE 65 U.N.O.
2. USE IN ALL 24–62 UNITS.

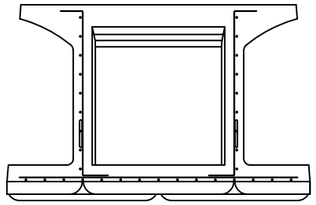

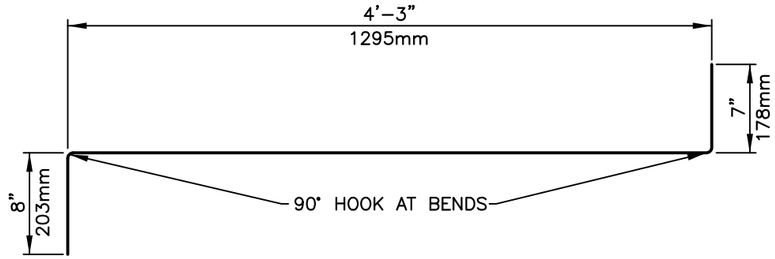

BENT WEB MESH – PLAN VIEW

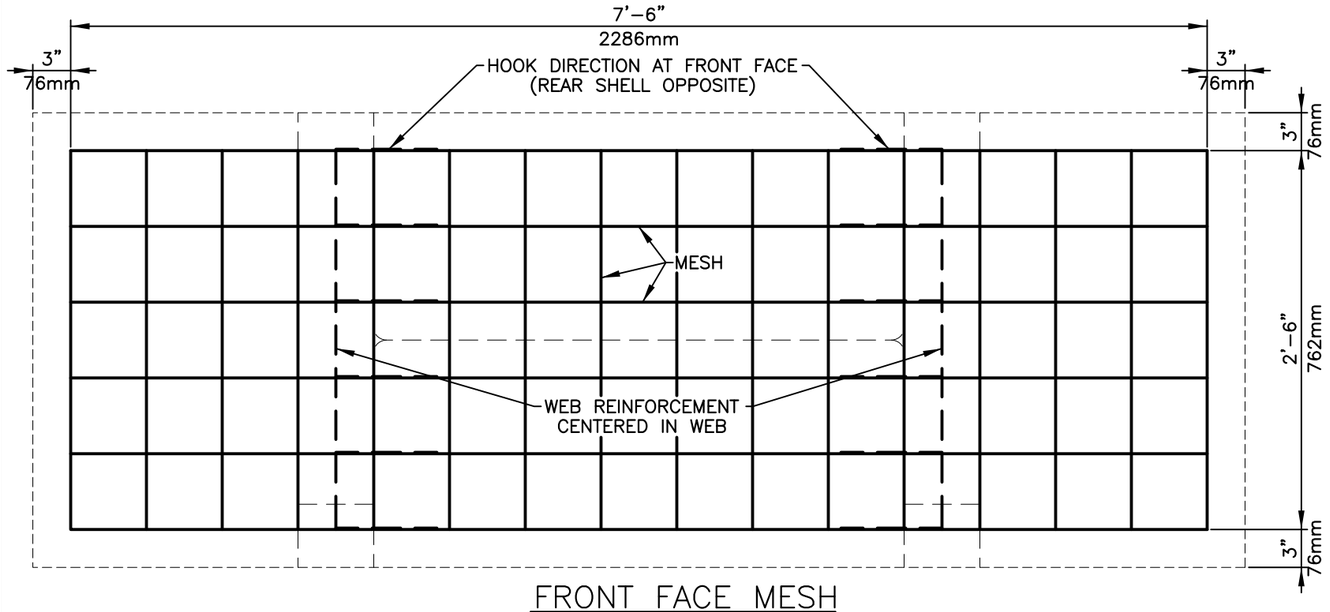

FRONT FACE MESH

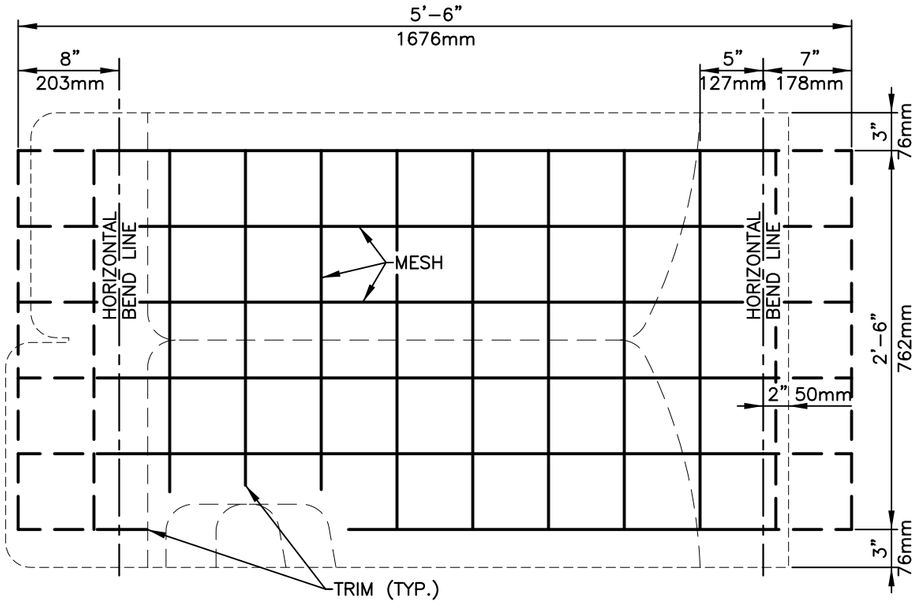

BENT WEB MESH (2 REQUIRED)

24–62 UNIT (24–62) – MESH OPTION

NOT TO SCALE

DISCLAIMER:

These typical details are preliminary and conceptual in nature. They are provided for general information purposes only. Anyone making use of these details and related information does so at their own risk and assumes all liability for such use. Site specific design should be performed by a licensed Professional Engineer who is familiar with the actual site conditions, materials, and local practices.

Thiele Geotech, Inc. and Stone Strong LLC are the authors of these drawings and retain all common law, statutory, and other reserved rights including the copyright. Limited license is granted to copy, reproduce, or modify the details to prepare construction drawings for Stone Strong retaining walls. Thiele Geotech, Inc. and Stone Strong LLC make no warranties, either expressed or implied, of merchantability or fitness for any particular purpose, and accept no responsibility for the accuracy, suitability, or completeness of information contained herein.

STONE STRONG SYSTEMS®

www.stonestrong.com

PROJECT

REINFORCING DETAILS

STONE STRONG SYSTEMS

DATE: 6/29/18 | FILE: 03_24–62 Mesh

NOTES:
1. ALL STEEL SHALL BE #4 BARS, GRADE 60, U.N.O.
2. USE IN ALL 24–62 UNITS.

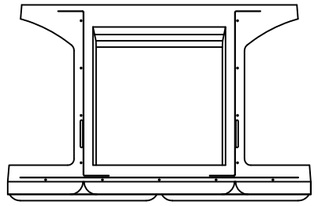

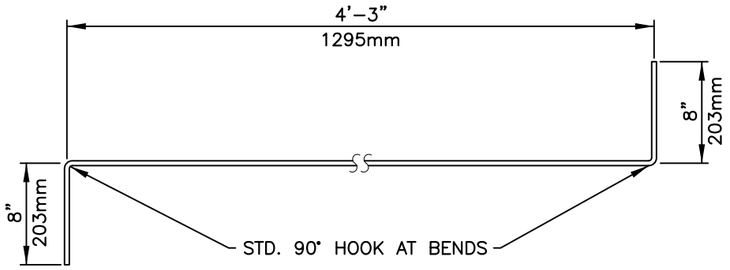

BENT WEB REBAR – PLAN VIEW

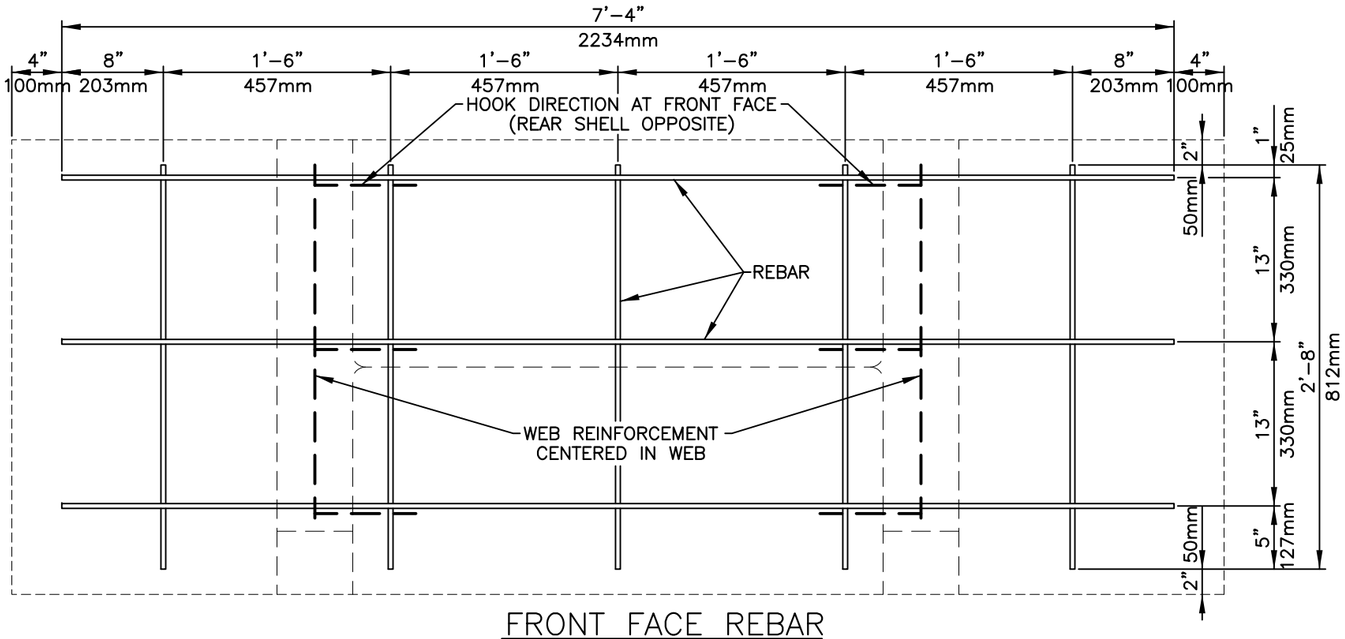

FRONT FACE REBAR

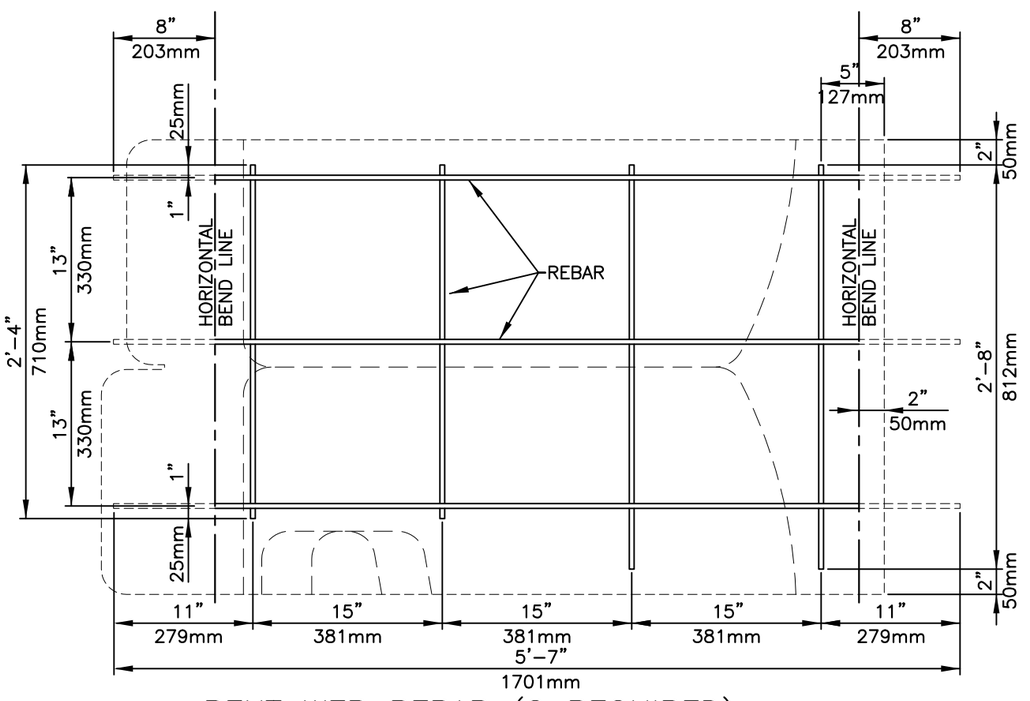

BENT WEB REBAR (2 REQUIRED)

24–62 UNIT (24–62) – REBAR OPTION

NOT TO SCALE

DISCLAIMER:
These typical details are preliminary and conceptual in nature. They are provided for general information purposes only. Anyone making use of these details and related information does so at their own risk and assumes all liability for such use. Site specific design should be performed by a licensed Professional Engineer who is familiar with the actual site conditions, materials, and local practices.

Thiele Geotech, Inc. and Stone Strong LLC are the authors of these drawings and retain all common law, statutory, and other reserved rights including the copyright. Limited license is granted to copy, reproduce, or modify the details to prepare construction drawings for Stone Strong retaining walls. Thiele Geotech, Inc. and Stone Strong LLC make no warranties, either expressed or implied, of merchantability or fitness for any particular purpose, and accept no responsibility for the accuracy, suitability, or completeness of information contained herein.

STONE STRONG SYSTEMS®
www.stonestrong.com

PROJECT
REINFORCING DETAILS
STONE STRONG SYSTEMS

DATE: 6/29/18 | FILE: 04_24–62 Rebar

NOTES:

1. ALL MESH SHALL BE W8xW8–6x6 WWF PER ASTM A185/A497/A1064, GRADE 65 U.N.O.
2. USE IN ALL 24–ME UNITS.

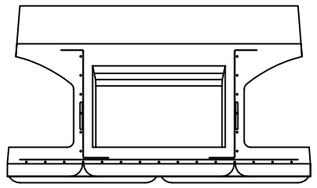

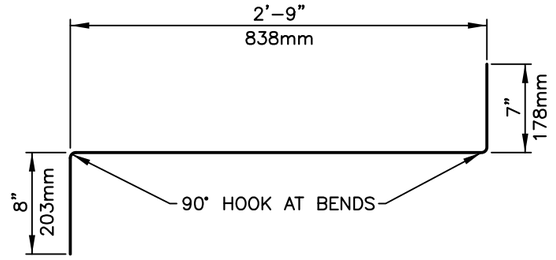

BENT WEB MESH – PLAN VIEW

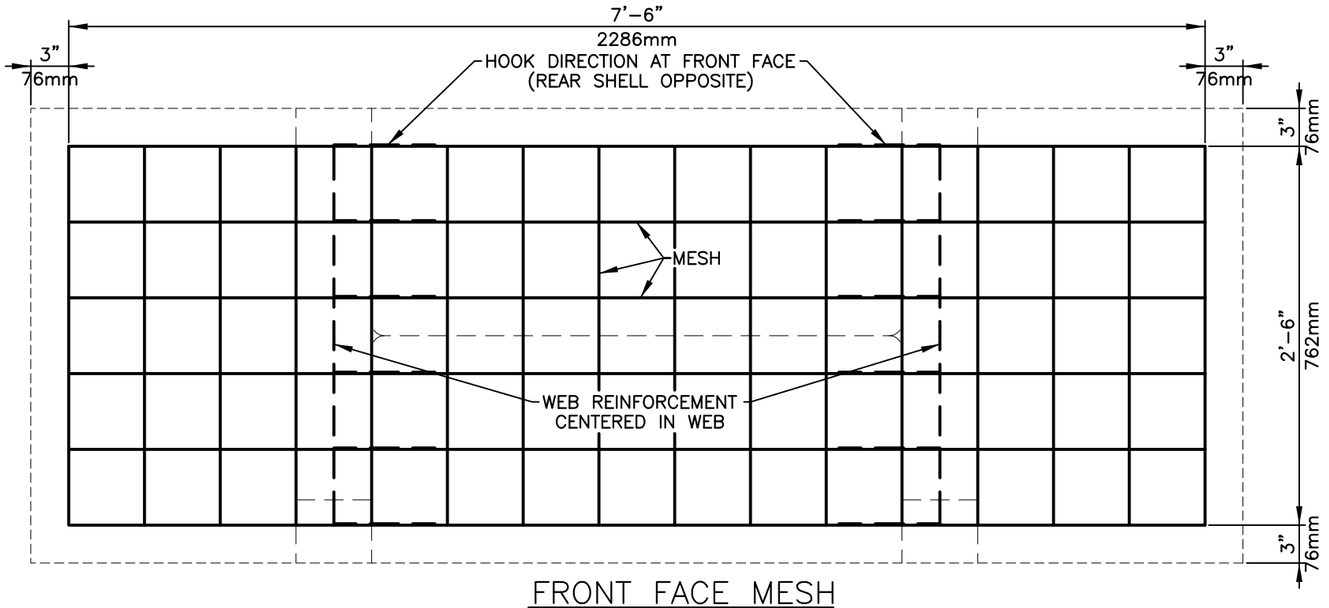

FRONT FACE MESH

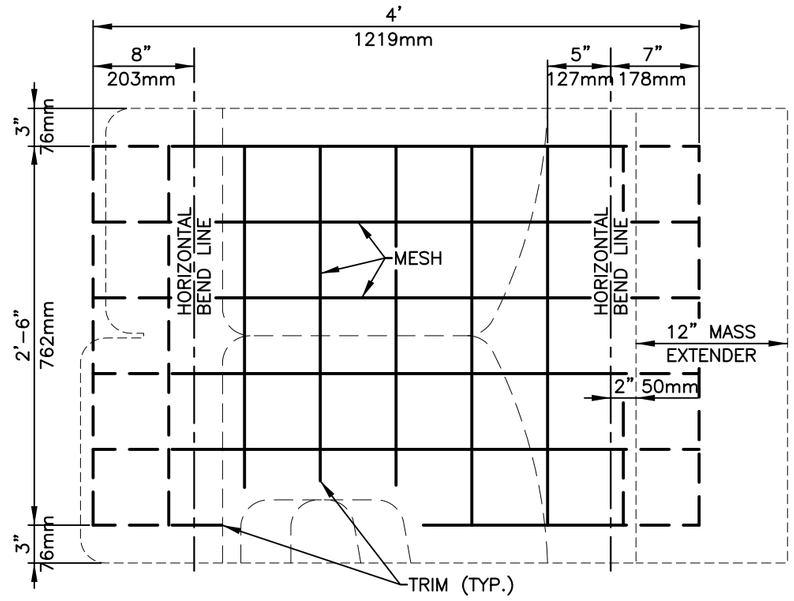

BENT WEB MESH (2 REQUIRED)

24SF MASS EXTENDER UNIT (24–ME) – MESH OPTION

NOT TO SCALE

DISCLAIMER:

These typical details are preliminary and conceptual in nature. They are provided for general information purposes only. Anyone making use of these details and related information does so at their own risk and assumes all liability for such use. Site specific design should be performed by a licensed Professional Engineer who is familiar with the actual site conditions, materials, and local practices.

Thiele Geotech, Inc. and Stone Strong LLC are the authors of these drawings and retain all common law, statutory, and other reserved rights including the copyright. Limited license is granted to copy, reproduce, or modify the details to prepare construction drawings for Stone Strong retaining walls. Thiele Geotech, Inc. and Stone Strong LLC make no warranties, either expressed or implied, of merchantability or fitness for any particular purpose, and accept no responsibility for the accuracy, suitability, or completeness of information contained herein.

STONE STRONG SYSTEMS®

www.stonestrong.com

PROJECT

REINFORCING DETAILS

STONE STRONG SYSTEMS

DATE: 6/29/18 | FILE: 05_24–ME Mesh

NOTES:
1. ALL STEEL SHALL BE #4 BARS, GRADE 60, U.N.O.
2. USE IN ALL 24–ME UNITS.

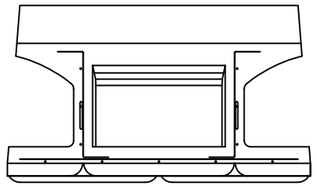

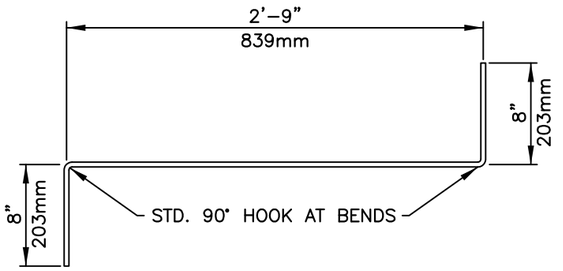

BENT WEB REBAR – PLAN VIEW

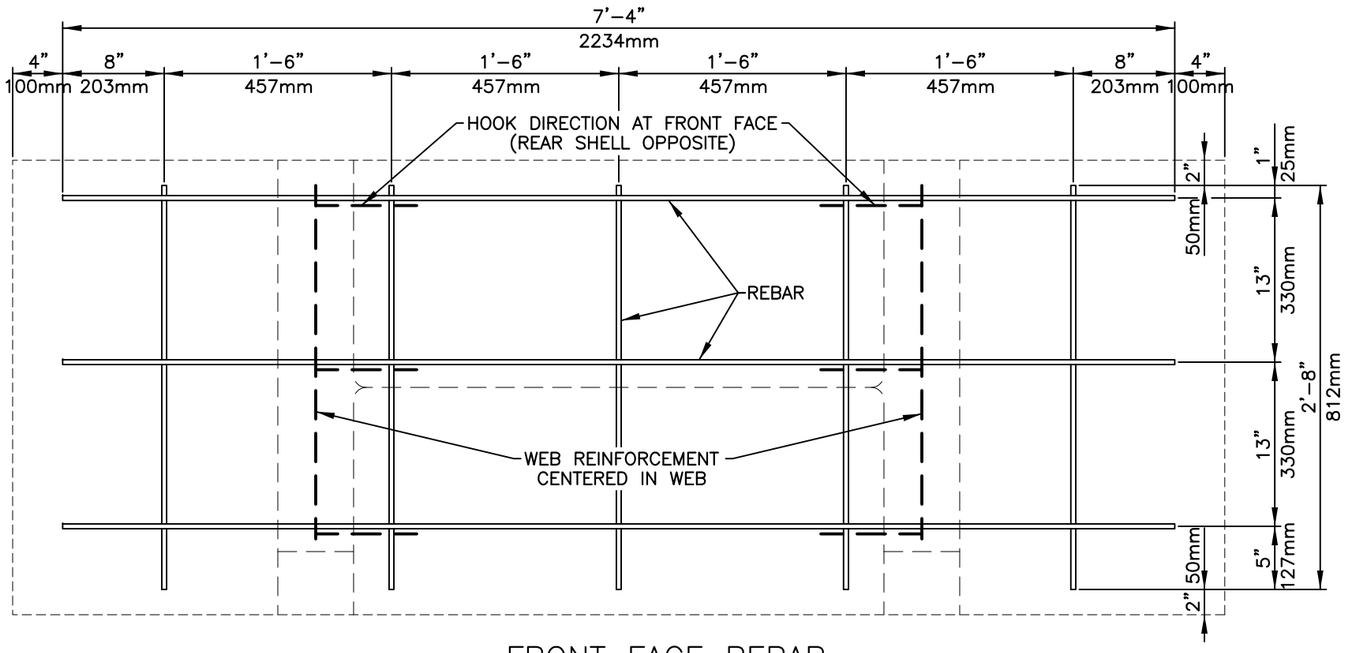

FRONT FACE REBAR

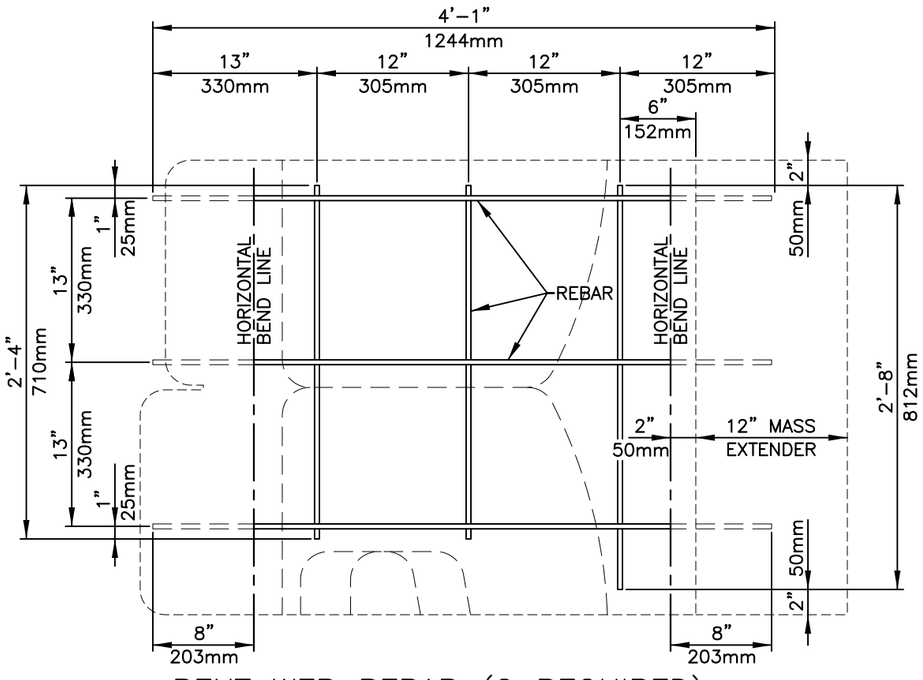

BENT WEB REBAR (2 REQUIRED)

24SF MASS EXTENDER UNIT (24–ME) – REBAR OPTION

NOT TO SCALE

DISCLAIMER:
These typical details are preliminary and conceptual in nature. They are provided for general information purposes only. Anyone making use of these details and related information does so at their own risk and assumes all liability for such use. Site specific design should be performed by a licensed Professional Engineer who is familiar with the actual site conditions, materials, and local practices.

Thiele Geotech, Inc. and Stone Strong LLC are the authors of these drawings and retain all common law, statutory, and other reserved rights including the copyright. Limited license is granted to copy, reproduce, or modify the details to prepare construction drawings for Stone Strong retaining walls. Thiele Geotech, Inc. and Stone Strong LLC make no warranties, either expressed or implied, of merchantability or fitness for any particular purpose, and accept no responsibility for the accuracy, suitability, or completeness of information contained herein.

STONE STRONG SYSTEMS®
www.stonestrong.com

PROJECT
REINFORCING DETAILS
STONE STRONG SYSTEMS

DATE: 6/29/18 | FILE: 06_24–ME Rebar

NOTES:

1. ALL MESH SHALL BE W8xW8–6x6 WWF PER ASTM A185/A497/A1064, GRADE 65 U.N.O.
2. ALL #5 BARS SHALL BE GRADE 60.
3. USE FOR PARAWEB MSE WALL IN TOP 36 FEET.

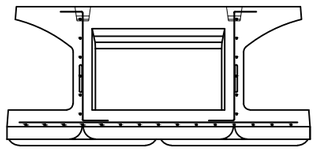

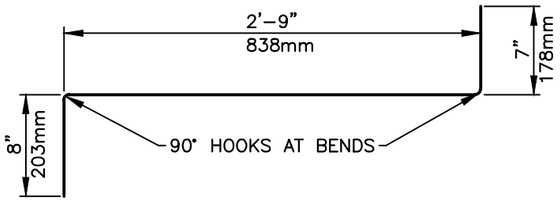

BENT WEB MESH – PLAN VIEW

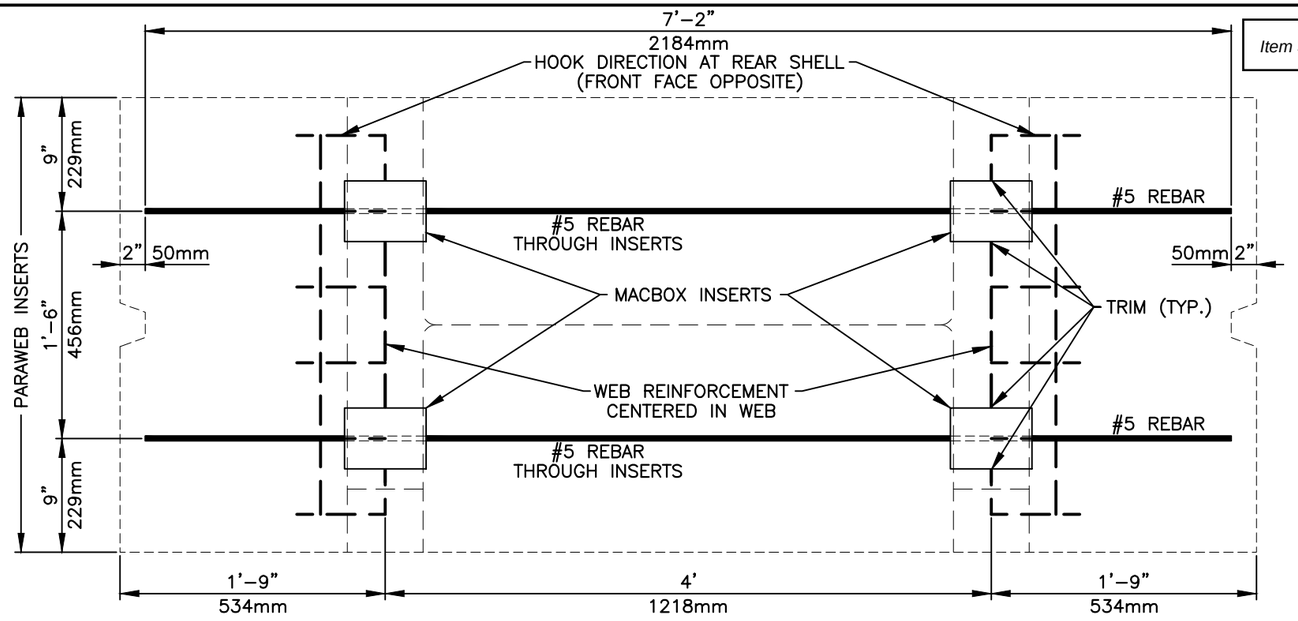

REAR SHELL MESH w/PARAWEB INSERTS

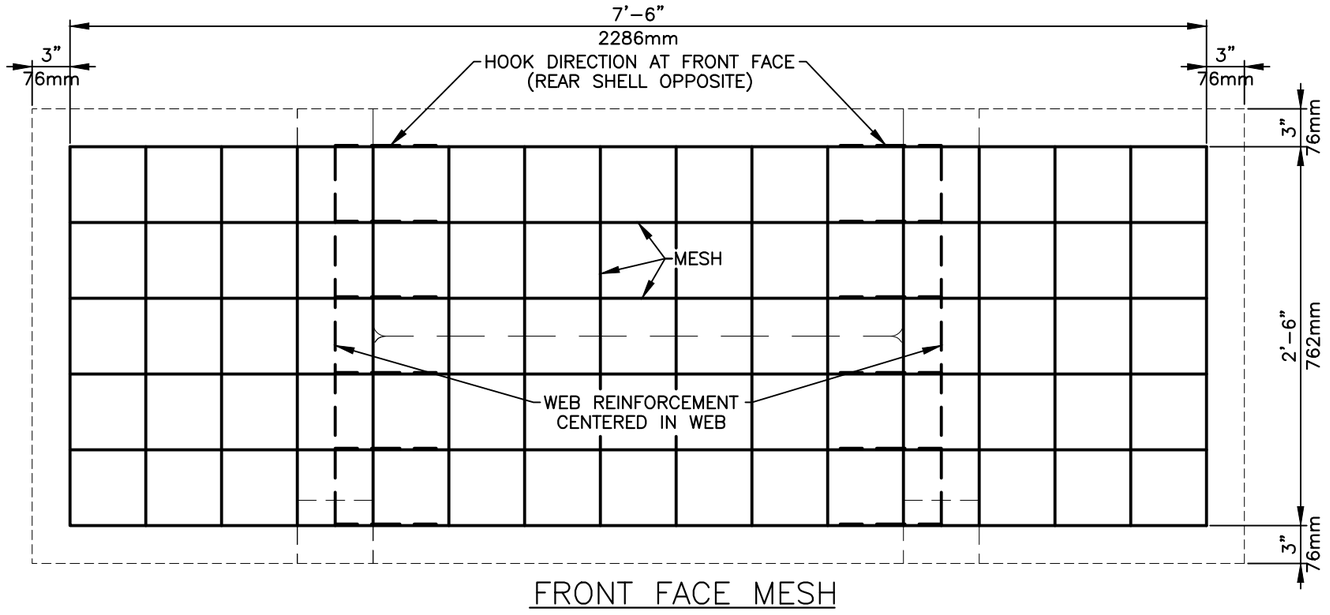

FRONT FACE MESH

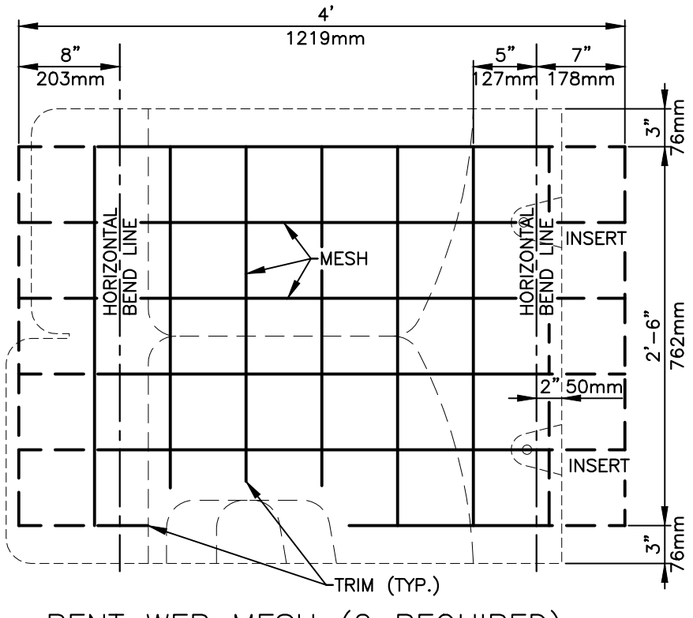

BENT WEB MESH (2 REQUIRED)

24SF PARAWEB UNIT (24SF–P) – MESH OPTION

NOT TO SCALE

DISCLAIMER:

These typical details are preliminary and conceptual in nature. They are provided for general information purposes only. Anyone making use of these details and related information does so at their own risk and assumes all liability for such use. Site specific design should be performed by a licensed Professional Engineer who is familiar with the actual site conditions, materials, and local practices.

Thiele Geotech, Inc. and Stone Strong LLC are the authors of these drawings and retain all common law, statutory, and other reserved rights including the copyright. Limited license is granted to copy, reproduce, or modify the details to prepare construction drawings for Stone Strong retaining walls. Thiele Geotech, Inc. and Stone Strong LLC make no warranties, either expressed or implied, of merchantability or fitness for any particular purpose, and accept no responsibility for the accuracy, suitability, or completeness of information contained herein.

STONE STRONG SYSTEMS®

www.stonestrong.com

PROJECT

REINFORCING DETAILS

STONE STRONG SYSTEMS

DATE: 12/16/19 | FILE: 07_24SF–P Mesh

NOTES:
1. ALL STEEL SHALL BE #4 BARS, GRADE 60, U.N.O.
2. ALL #5 BARS SHALL BE GRADE 60.
3. USE FOR PARAWEB MSE WALL IN TOP 36 FEET.

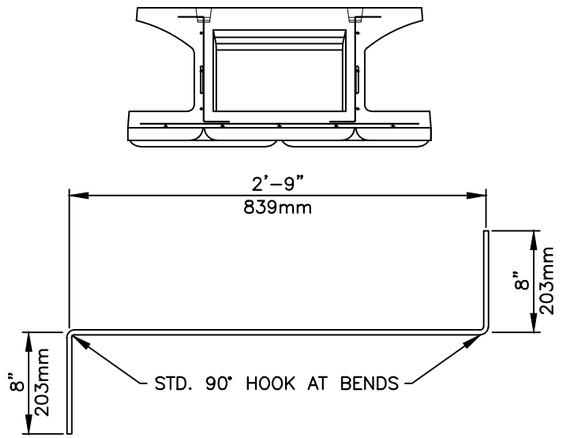

BENT WEB REBAR – PLAN VIEW

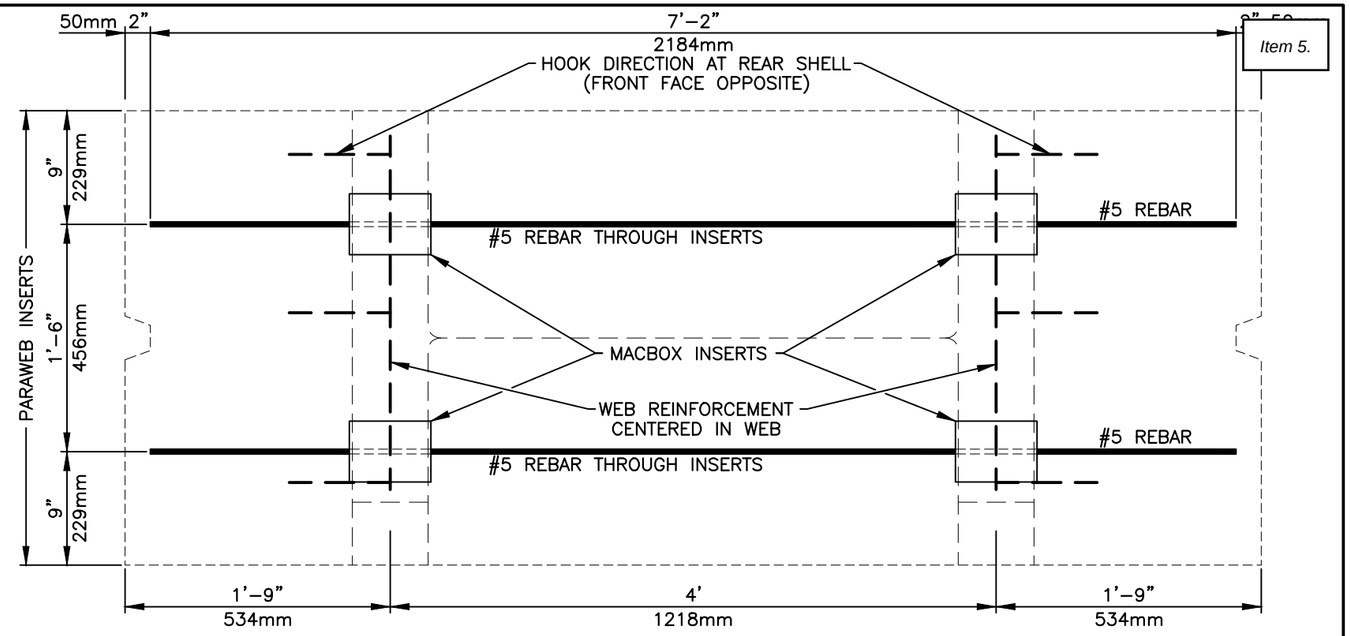

REAR SHELL REBAR

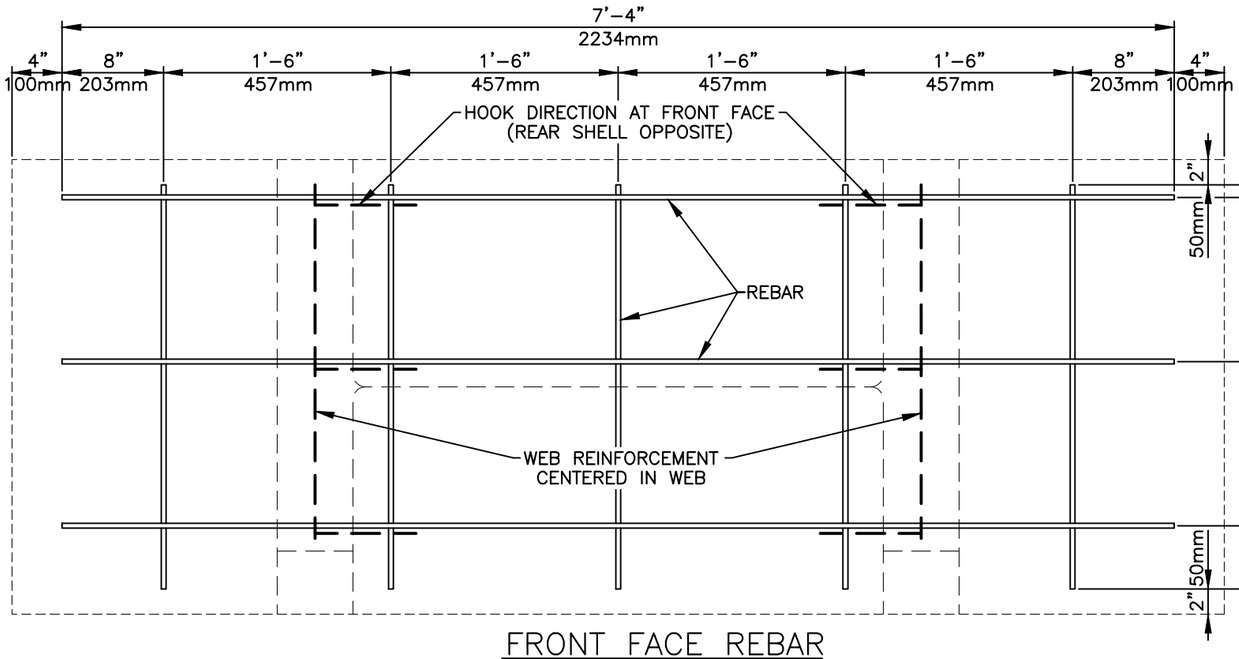

FRONT FACE REBAR

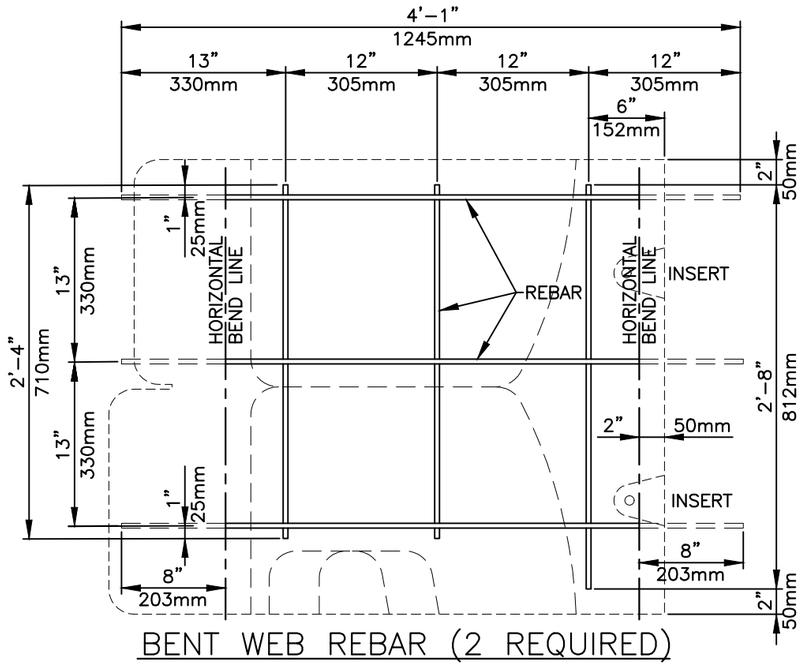

BENT WEB REBAR (2 REQUIRED)

24SF PARAWEB UNIT (24SF–P) – REBAR OPTION

NOT TO SCALE

DISCLAIMER:
These typical details are preliminary and conceptual in nature. They are provided for general information purposes only. Anyone making use of these details and related information does so at their own risk and assumes all liability for such use. Site specific design should be performed by a licensed Professional Engineer who is familiar with the actual site conditions, materials, and local practices.

Thiele Geotech, Inc. and Stone Strong LLC are the authors of these drawings and retain all common law, statutory, and other reserved rights including the copyright. Limited license is granted to copy, reproduce, or modify the details to prepare construction drawings for Stone Strong retaining walls. Thiele Geotech, Inc. and Stone Strong LLC make no warranties, either expressed or implied, of merchantability or fitness for any particular purpose, and accept no responsibility for the accuracy, suitability, or completeness of information contained herein.

STONE STRONG SYSTEMS®
www.stonestrong.com

PROJECT
REINFORCING DETAILS
STONE STRONG SYSTEMS

DATE: 12/16/19 | FILE: 08_24SF–P Rebar

NOTES:

1. ALL MESH SHALL BE W8xW8–6x6 WWF PER ASTM A185/A497/A1064, GRADE 65 U.N.O.
2. ALL #5 BARS SHALL BE GRADE 60.
3. USE IN PARAWEB MSE WALL BETWEEN 36 AND 51 FEET BELOW TOP OF WALL.

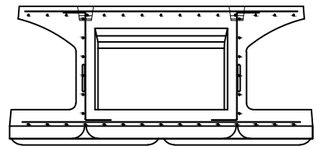

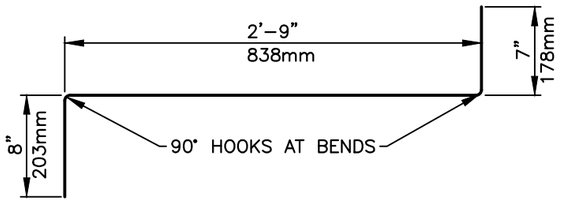

BENT WEB MESH – PLAN VIEW

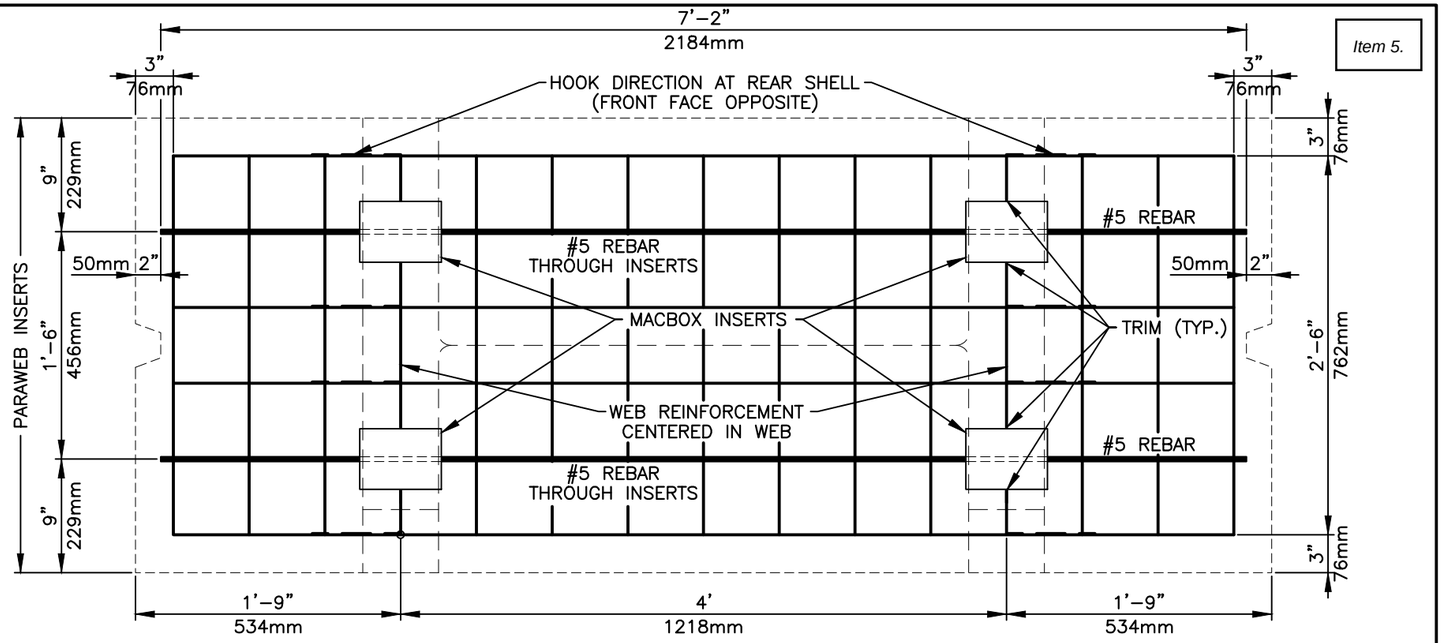

REAR SHELL MESH w/PARAWEB INSERTS

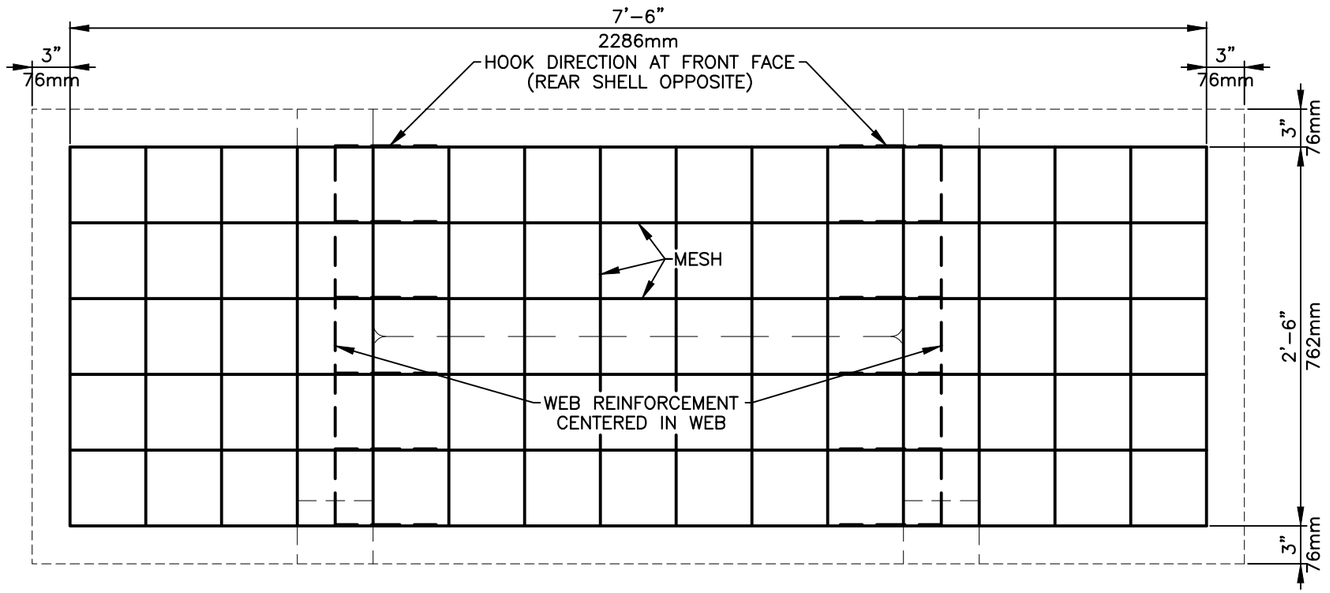

FRONT FACE MESH

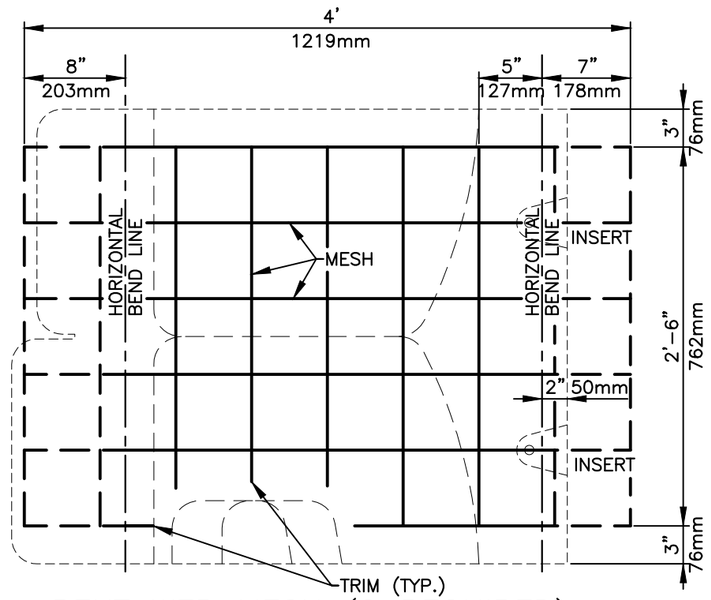

BENT WEB MESH (2 REQUIRED)

24SF HEAVY DUTY PARAWEB UNIT (24SF–HDP) – MESH OPTION

NOT TO SCALE

DISCLAIMER:

These typical details are preliminary and conceptual in nature. They are provided for general information purposes only. Anyone making use of these details and related information does so at their own risk and assumes all liability for such use. Site specific design should be performed by a licensed Professional Engineer who is familiar with the actual site conditions, materials, and local practices.

Thiele Geotech, Inc. and Stone Strong LLC are the authors of these drawings and retain all common law, statutory, and other reserved rights including the copyright. Limited license is granted to copy, reproduce, or modify the details to prepare construction drawings for Stone Strong retaining walls. Thiele Geotech, Inc. and Stone Strong LLC make no warranties, either expressed or implied, of merchantability or fitness for any particular purpose, and accept no responsibility for the accuracy, suitability, or completeness of information contained herein.

STONE STRONG SYSTEMS®

www.stonestrong.com

PROJECT

REINFORCING DETAILS

STONE STRONG SYSTEMS

DATE: 12/16/19 | FILE: 09_24SF–HDP Mesh

NOTES:

1. ALL STEEL SHALL BE #4 BARS, GRADE 60, U.N.O.
2. ALL #5 BARS SHALL BE GRADE 60.
3. USE IN PARAWEB MSE WALL BETWEEN 36 AND 51 FEET BELOW TOP OF WALL.

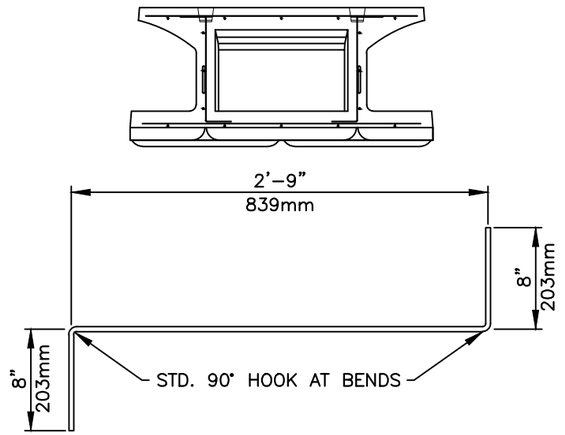

BENT WEB REBAR – PLAN VIEW

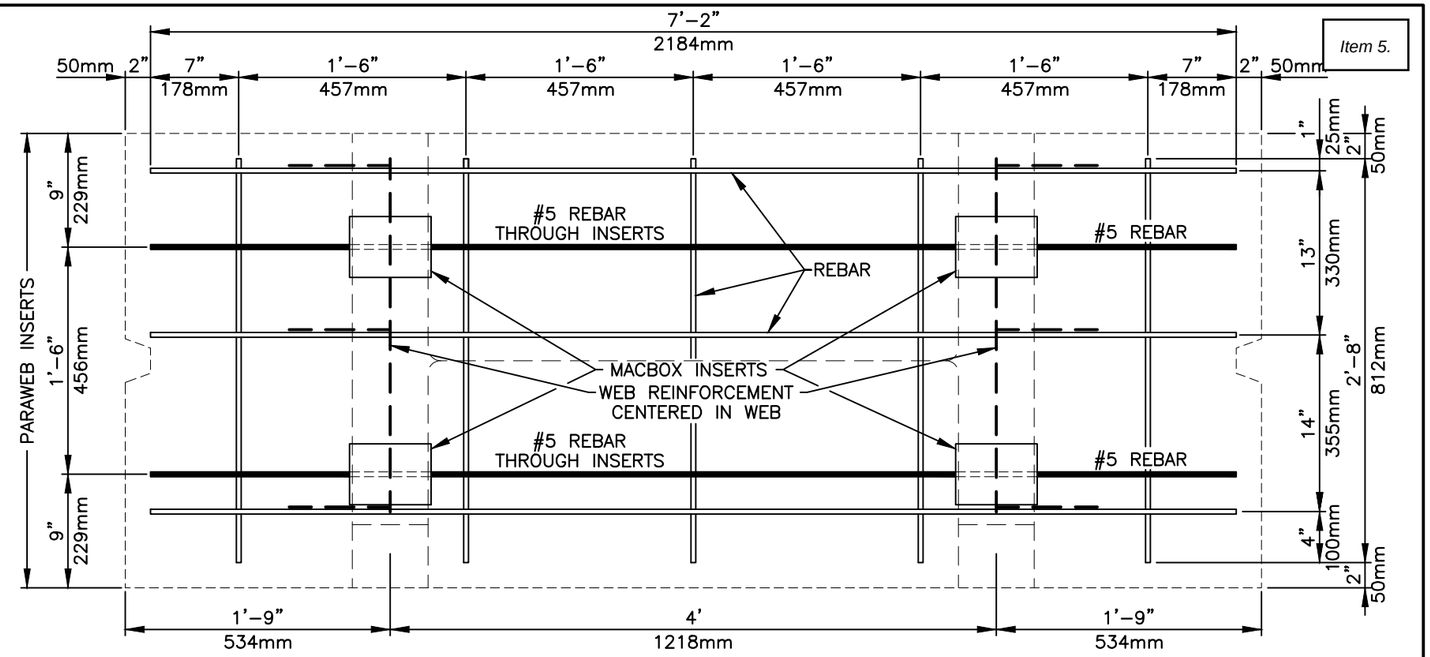

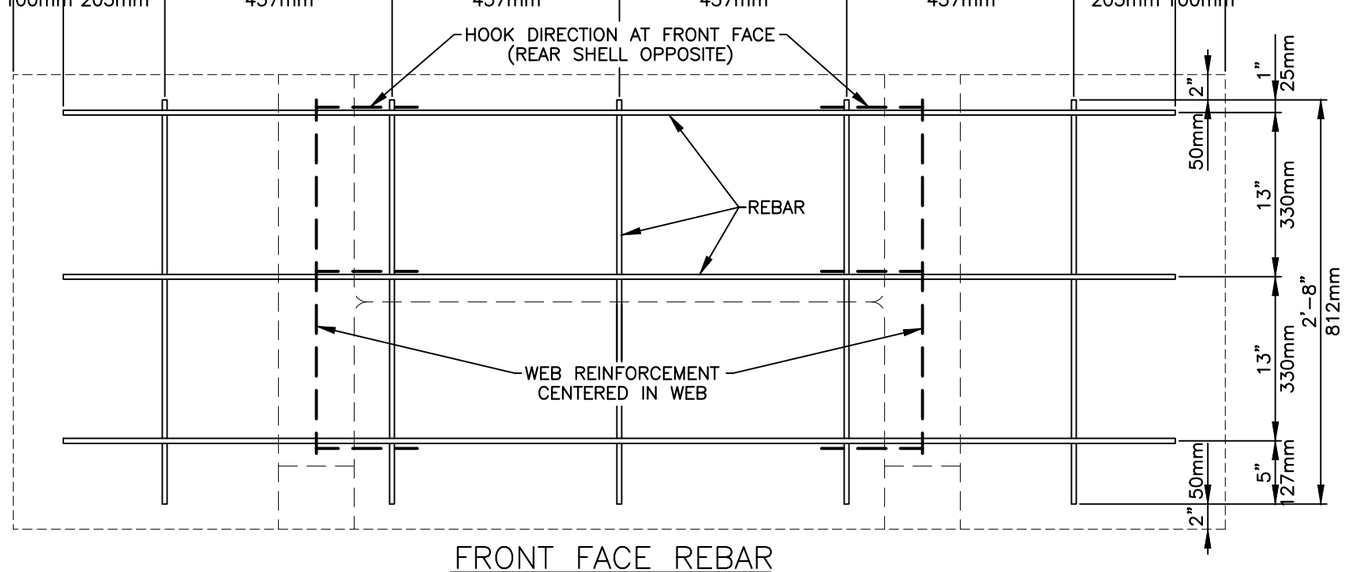

FRONT FACE REBAR

REAR SHELL REBAR

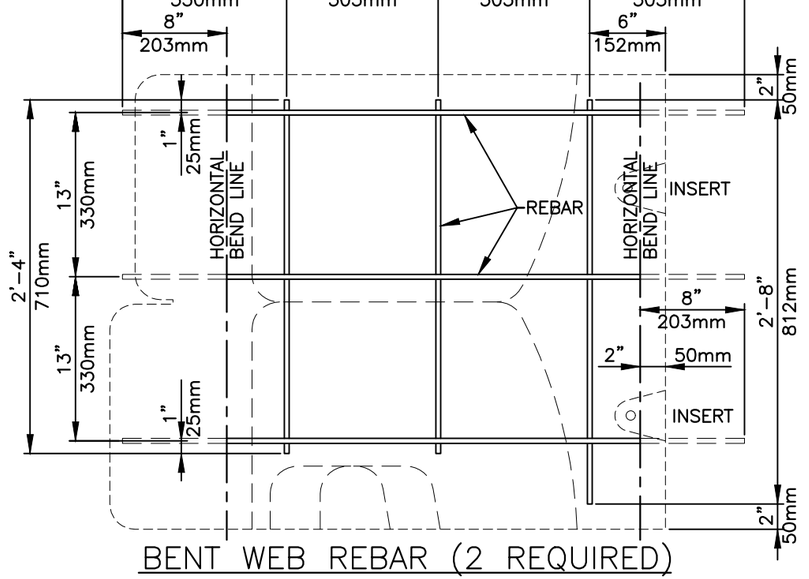

BENT WEB REBAR (2 REQUIRED)

24SF HEAVY DUTY PARAWEB UNIT (24SF–HDP) – REBAR OPTION

NOT TO SCALE

DISCLAIMER:
These typical details are preliminary and conceptual in nature. They are provided for general information purposes only. Anyone making use of these details and related information does so at their own risk and assumes all liability for such use. Site specific design should be performed by a licensed Professional Engineer who is familiar with the actual site conditions, materials, and local practices.

Thiele Geotech, Inc. and Stone Strong LLC are the authors of these drawings and retain all common law, statutory, and other reserved rights including the copyright. Limited license is granted to copy, reproduce, or modify the details to prepare construction drawings for Stone Strong retaining walls. Thiele Geotech, Inc. and Stone Strong LLC make no warranties, either expressed or implied, of merchantability or fitness for any particular purpose, and accept no responsibility for the accuracy, suitability, or completeness of information contained herein.

STONE STRONG SYSTEMS®
www.stonestrong.com

PROJECT
REINFORCING DETAILS
STONE STRONG SYSTEMS

DATE: 12/16/19 | FILE: 10_24SF–HDP Rebar

NOTES:

1. ALL #5 BARS SHALL BE GRADE 60.
2. USE IN PARAWEB MSE WALL IN TOP 12 FEET.
3. MAY ALSO BE USED IN BOTTOM COURSE ONLY OF PARAWEB MSE WALL USING 24SF UNITS ABOVE.

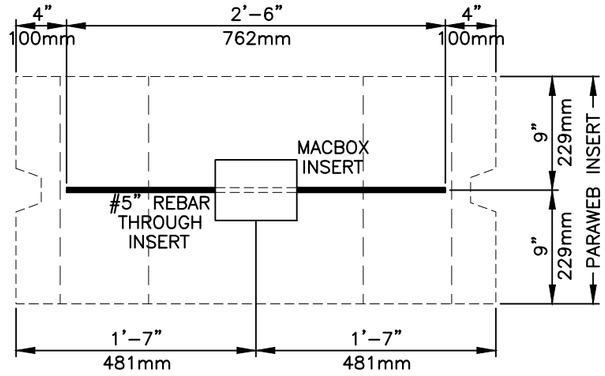

REAR SHELL

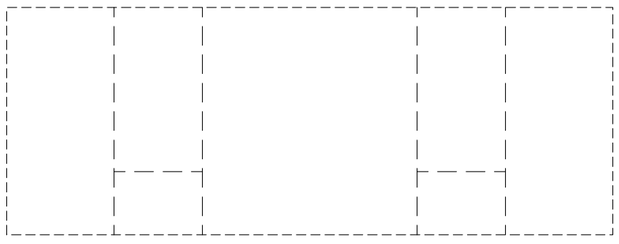

FRONT FACE

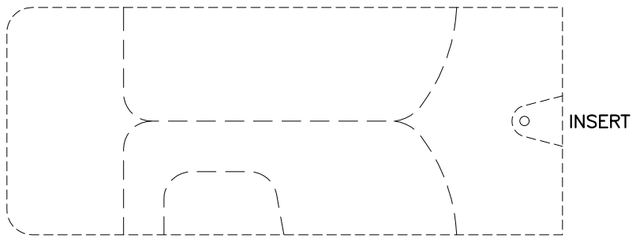

SIDE ELEVATION

6SF PARAWEB UNIT (6SF–P)

NOT TO SCALE

DISCLAIMER:

These typical details are preliminary and conceptual in nature. They are provided for general information purposes only. Anyone making use of these details and related information does so at their own risk and assumes all liability for such use. Site specific design should be performed by a licensed Professional Engineer who is familiar with the actual site conditions, materials, and local practices.

Thiele Geotech, Inc. and Stone Strong LLC are the authors of these drawings and retain all common law, statutory, and other reserved rights including the copyright. Limited license is granted to copy, reproduce, or modify the details to prepare construction drawings for Stone Strong retaining walls. Thiele Geotech, Inc. and Stone Strong LLC make no warranties, either expressed or implied, of merchantability or fitness for any particular purpose, and accept no responsibility for the accuracy, suitability, or completeness of information contained herein.

STONE STRONG SYSTEMS®

www.stonestrong.com

PROJECT

REINFORCING DETAILS

STONE STRONG SYSTEMS

DATE: 12/16/19 | FILE: 11_6SF–P

NOTES:

1. ALL MESH SHALL BE W8xW8–6x6 WWF PER ASTM A185/A497/A1064, GRADE 65 U.N.O.
2. ALL #5 BARS SHALL BE GRADE 60.
3. USE IN PARAWEB MSE WALL BETWEEN 12 AND 51 FEET BELOW TOP OF WALL.

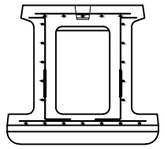

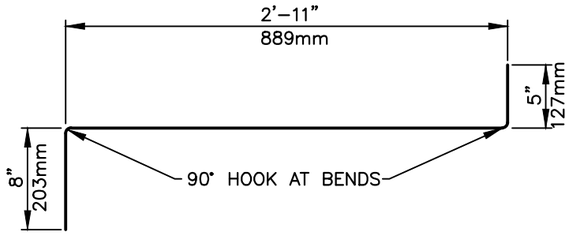

BENT WEB MESH – PLAN VIEW

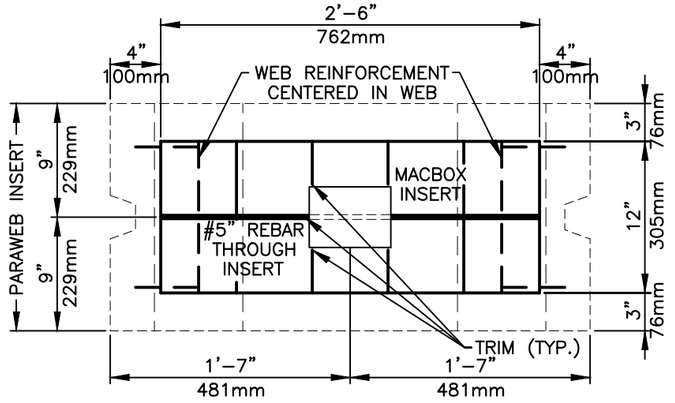

REAR SHELL MESH

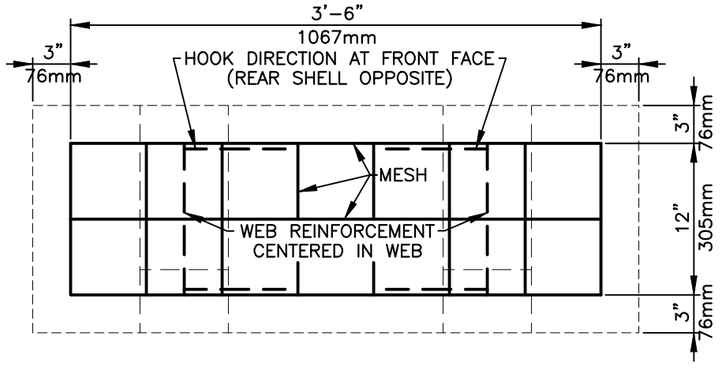

FRONT FACE MESH

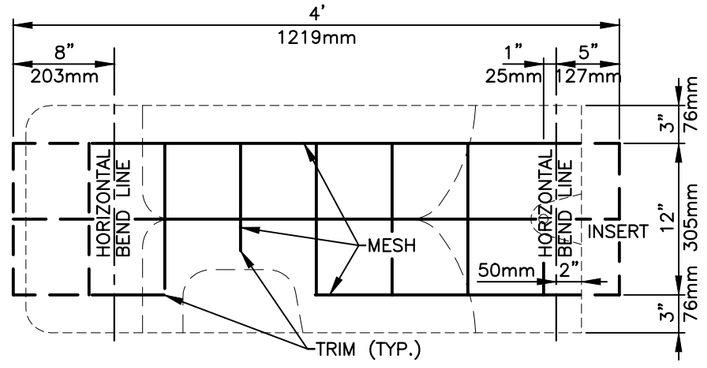

BENT WEB MESH (2 REQUIRED)

6 SF HEAVY DUTY PARAWEB UNIT (6SF–HDP) – MESH OPTION

NOT TO SCALE

DISCLAIMER:

These typical details are preliminary and conceptual in nature. They are provided for general information purposes only. Anyone making use of these details and related information does so at their own risk and assumes all liability for such use. Site specific design should be performed by a licensed Professional Engineer who is familiar with the actual site conditions, materials, and local practices.

Thiele Geotech, Inc. and Stone Strong LLC are the authors of these drawings and retain all common law, statutory, and other reserved rights including the copyright. Limited license is granted to copy, reproduce, or modify the details to prepare construction drawings for Stone Strong retaining walls. Thiele Geotech, Inc. and Stone Strong LLC make no warranties, either expressed or implied, of merchantability or fitness for any particular purpose, and accept no responsibility for the accuracy, suitability, or completeness of information contained herein.

STONE STRONG SYSTEMS®

www.stonestrong.com

PROJECT

REINFORCING DETAILS

STONE STRONG SYSTEMS

DATE: 12/16/19 | FILE: 12_6SF–HDP Mesh

NOTES:

1. ALL STEEL SHALL BE #4 BARS, GRADE 60, U.N.O.
2. ALL #5 BARS SHALL BE GRADE 60.
3. USE IN PARAWEB MSE WALL BETWEEN 12 AND 51 FEET BELOW TOP OF WALL.

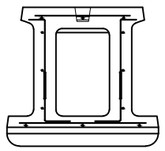

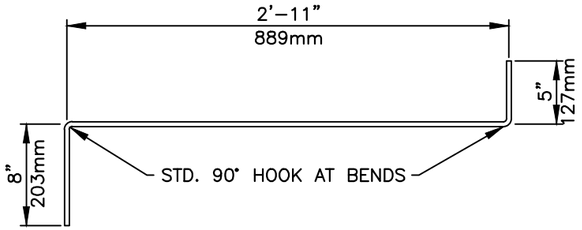

BENT WEB REBAR – PLAN VIEW

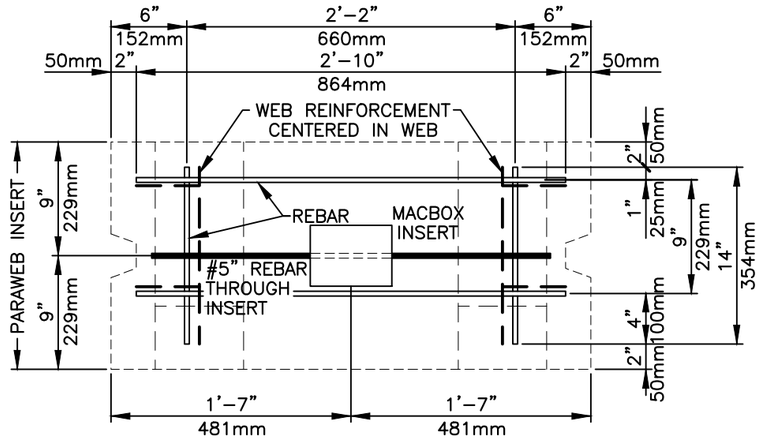

REAR SHELL REBAR

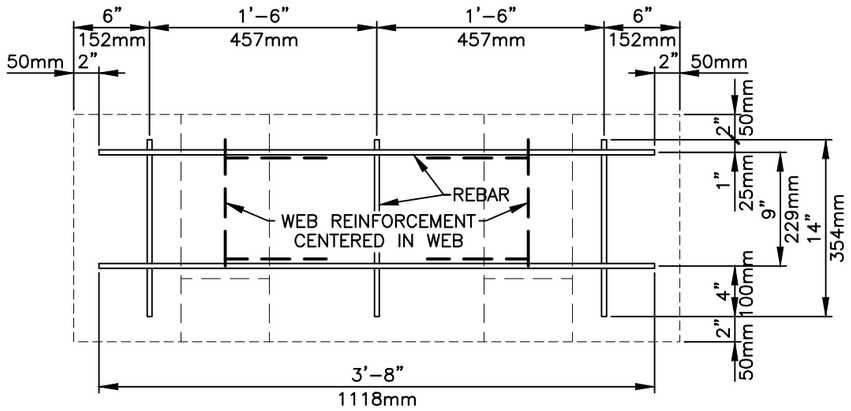

FRONT FACE REBAR

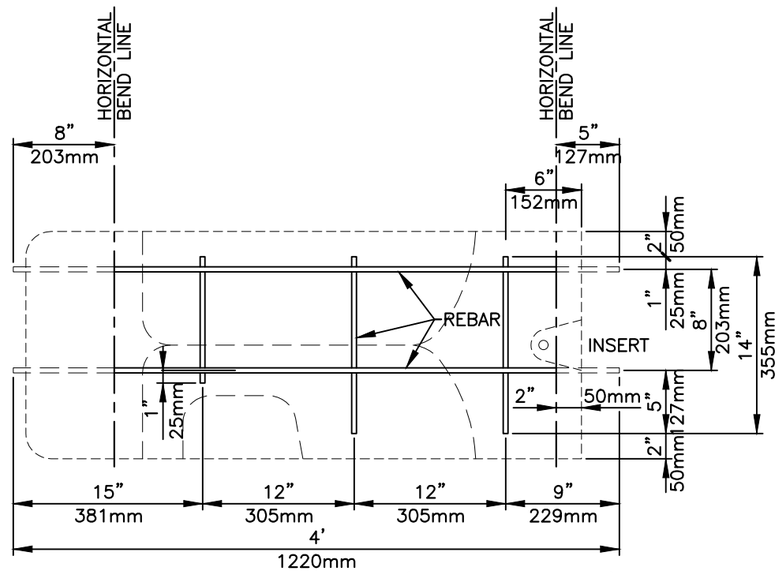

BENT WEB REBAR (2 REQUIRED)

6 SF HEAVY DUTY PARAWEB UNIT (6SF–HDP) – REBAR OPTION

NOT TO SCALE

DISCLAIMER:

These typical details are preliminary and conceptual in nature. They are provided for general information purposes only. Anyone making use of these details and related information does so at their own risk and assumes all liability for such use. Site specific design should be performed by a licensed Professional Engineer who is familiar with the actual site conditions, materials, and local practices.

Thiele Geotech, Inc. and Stone Strong LLC are the authors of these drawings and retain all common law, statutory, and other reserved rights including the copyright. Limited license is granted to copy, reproduce, or modify the details to prepare construction drawings for Stone Strong retaining walls. Thiele Geotech, Inc. and Stone Strong LLC make no warranties, either expressed or implied, of merchantability or fitness for any particular purpose, and accept no responsibility for the accuracy, suitability, or completeness of information contained herein.

STONE STRONG SYSTEMS®

www.stonestrong.com

PROJECT

REINFORCING DETAILS

STONE STRONG SYSTEMS

DATE: 7/22/19 | FILE: 13_6SF–HDP Rebar

NOTES:
1. ALL #5 BARS SHALL BE GRADE 60.
2. USE IN PARAWEB MSE WALL IN TOP 12 FEET ONLY.

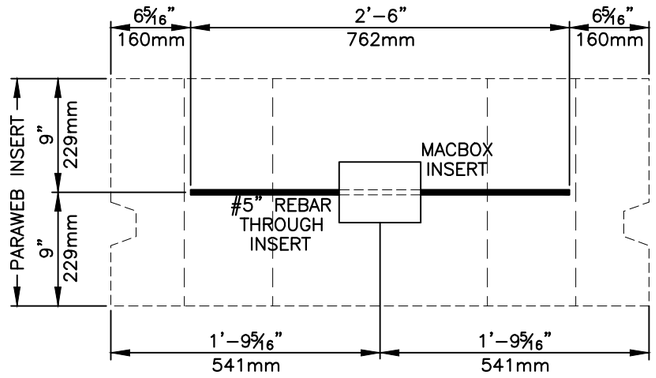

REAR SHELL

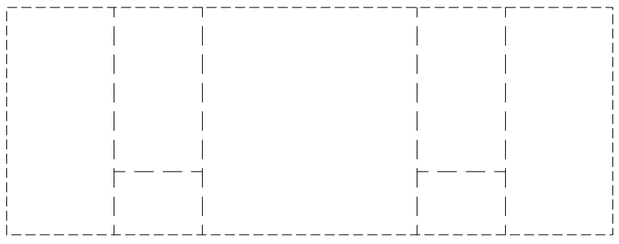

FRONT FACE

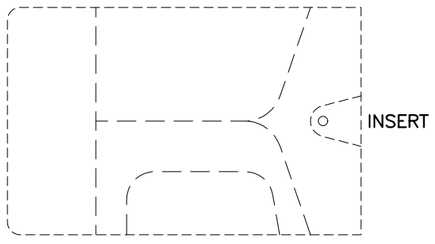

SIDE ELEVATION

6–28 PARAWEB UNIT (6–28–P)

NOT TO SCALE

DISCLAIMER:
These typical details are preliminary and conceptual in nature. They are provided for general information purposes only. Anyone making use of these details and related information does so at their own risk and assumes all liability for such use. Site specific design should be performed by a licensed Professional Engineer who is familiar with the actual site conditions, materials, and local practices.

Thiele Geotech, Inc. and Stone Strong LLC are the authors of these drawings and retain all common law, statutory, and other reserved rights including the copyright. Limited license is granted to copy, reproduce, or modify the details to prepare construction drawings for Stone Strong retaining walls. Thiele Geotech, Inc. and Stone Strong LLC make no warranties, either expressed or implied, of merchantability or fitness for any particular purpose, and accept no responsibility for the accuracy, suitability, or completeness of information contained herein.

STONE STRONG SYSTEMS®
www.stonestrong.com

PROJECT
REINFORCING DETAILS
STONE STRONG SYSTEMS

DATE: 12/16/19 | FILE: 14_6–28–P

NOTES:

1. ALL MESH SHALL BE W8xW8–6x6 WWF PER ASTM A185/A497/A1064, GRADE 65 U.N.O.
2. ALL #5 BARS SHALL BE GRADE 60.
3. USE IN PARAWEB MSE WALL BETWEEN 12 AND 51 FEET BELOW TOP OF WALL.

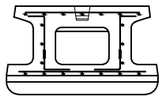

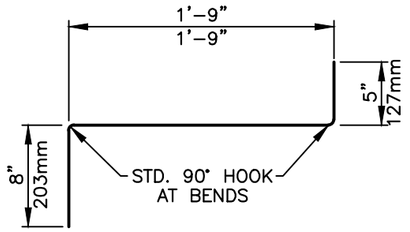

BENT WEB MESH – PLAN VIEW

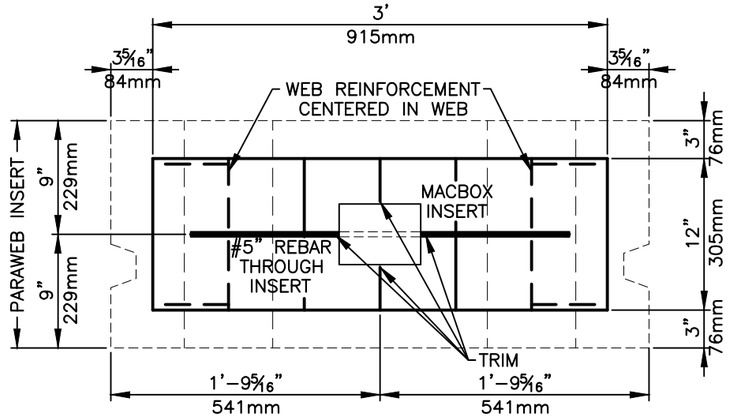

REAR SHELL MESH

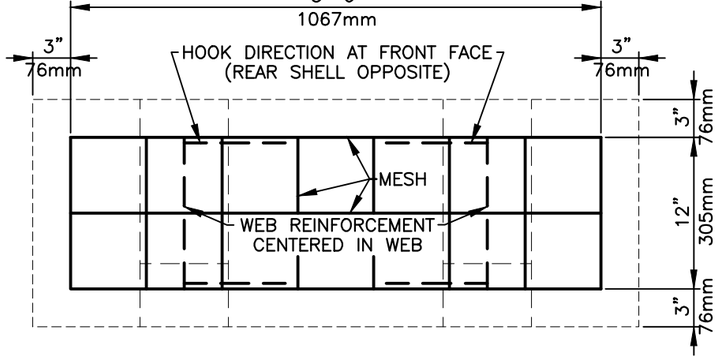

FRONT FACE MESH

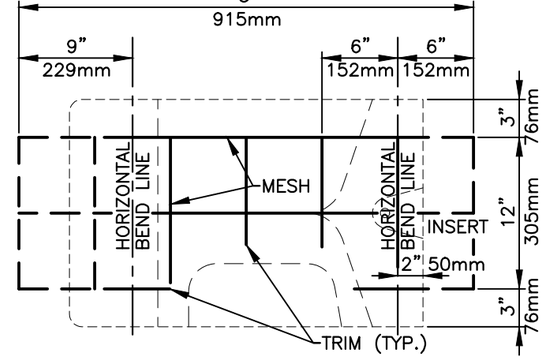

BENT WEB MESH (2 REQUIRED)

6–28 HEAVY DUTY PARAWEB UNIT (6–28–HDP) – MESH OPTION

NOT TO SCALE

DISCLAIMER:

These typical details are preliminary and conceptual in nature. They are provided for general information purposes only. Anyone making use of these details and related information does so at their own risk and assumes all liability for such use. Site specific design should be performed by a licensed Professional Engineer who is familiar with the actual site conditions, materials, and local practices.

Thiele Geotech, Inc. and Stone Strong LLC are the authors of these drawings and retain all common law, statutory, and other reserved rights including the copyright. Limited license is granted to copy, reproduce, or modify the details to prepare construction drawings for Stone Strong retaining walls. Thiele Geotech, Inc. and Stone Strong LLC make no warranties, either expressed or implied, of merchantability or fitness for any particular purpose, and accept no responsibility for the accuracy, suitability, or completeness of information contained herein.

STONE STRONG SYSTEMS®

www.stonestrong.com

PROJECT

REINFORCING DETAILS

STONE STRONG SYSTEMS

DATE: 12/16/19 | FILE: 15_6–28–HDP Mesh

NOTES:

1. ALL STEEL SHALL BE #4 BARS, GRADE 60, U.N.O.
2. ALL #5 BARS SHALL BE GRADE 60.
3. USE IN PARAWEB MSE WALL BETWEEN 12 AND 51 FEET BELOW TOP OF WALL.

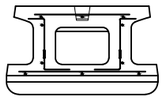

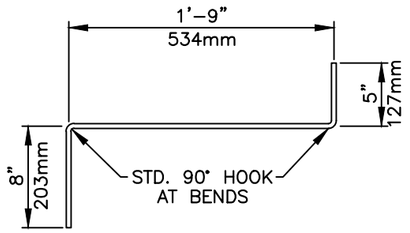

BENT WEB REBAR – PLAN VIEW

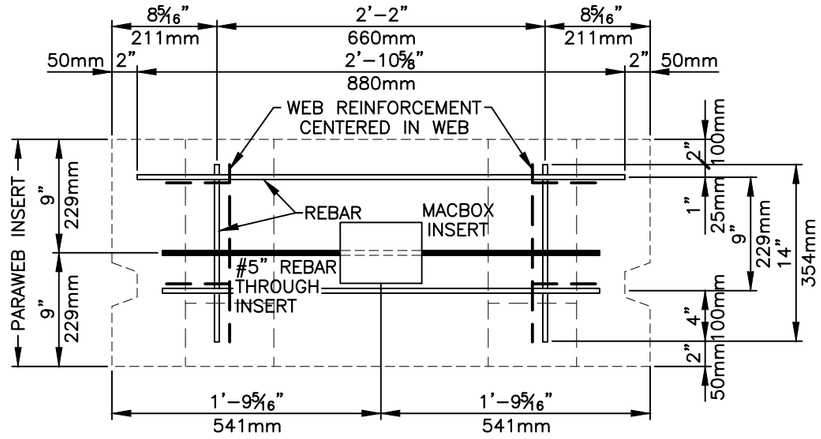

REAR SHELL REBAR

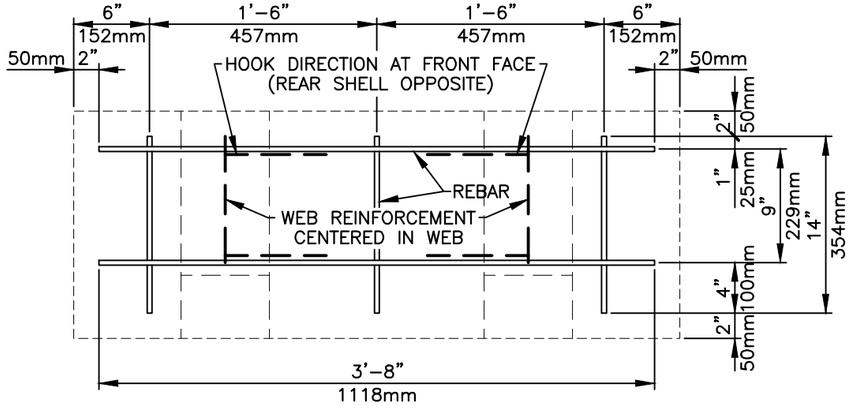

FRONT FACE REBAR

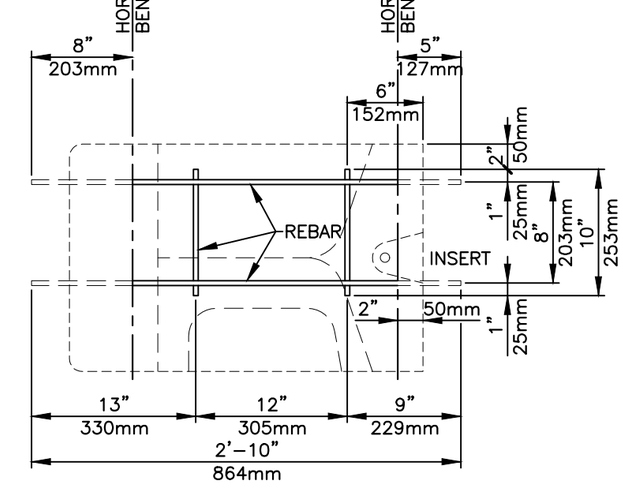

BENT WEB REBAR (2 REQUIRED)

6–28 HEAVY DUTY PARAWEB UNIT (6–28–HDP) – REBAR OPTION

NOT TO SCALE

DISCLAIMER:

These typical details are preliminary and conceptual in nature. They are provided for general information purposes only. Anyone making use of these details and related information does so at their own risk and assumes all liability for such use. Site specific design should be performed by a licensed Professional Engineer who is familiar with the actual site conditions, materials, and local practices.

Thiele Geotech, Inc. and Stone Strong LLC are the authors of these drawings and retain all common law, statutory, and other reserved rights including the copyright. Limited license is granted to copy, reproduce, or modify the details to prepare construction drawings for Stone Strong retaining walls. Thiele Geotech, Inc. and Stone Strong LLC make no warranties, either expressed or implied, of merchantability or fitness for any particular purpose, and accept no responsibility for the accuracy, suitability, or completeness of information contained herein.

STONE STRONG SYSTEMS®

www.stonestrong.com

PROJECT

REINFORCING DETAILS

STONE STRONG SYSTEMS

DATE: 12/16/19 | FILE: 16_6–28–HDP Rebar

DESIGN COMPUTATIONS FOR

Stone Strong Standard Block Analysis

12/1/2017

PREPARED FOR:

Stone Strong Systems
13460 Chandler Road
Suite 100
Omaha, Nebraska 68138

PREPARED BY:

860 Hooper Road, Endwell, New York 13760
TEL: 607-231-6600 FAX: 607-231-6650
EMAIL: precast@delta-eas.com
www.delta-eas.com

IT IS A VIOLATION OF LAW FOR ANY PERSON, UNLESS THEY ARE ACTING UNDER THE DIRECTION OF A LICENSED PROFESSIONAL ENGINEER, ARCHITECT, LANDSCAPE ARCHITECT, OR LAND SURVEYOR, TO ALTER AN ITEM IN ANY WAY. IF AN ITEM BEARING THE STAMP OF A LICENSED PROFESSIONAL IS ALTERED, THE ALTERING ENGINEER, ARCHITECT, LANDSCAPE ARCHITECT, OR LAND SURVEYOR SHALL STAMP THE DOCUMENT AND INCLUDE THE NOTATION "ALTERED BY" FOLLOWED BY THEIR SIGNATURE, THE DATE OF SUCH ALTERATION, AND A SPECIFIC DESCRIPTION OF THE ALTERATION.

Item 5.

DELTA
SPECIALTY PRECAST CONCRETE ENGINEERS
860 Hooper Road, Endwell, NY 13760
www.delta-eas.com
Phone: (607) 231-6600
Fax: (607) 231-6650

JOB 2017.478.001
DESCRIPTION Stonestrong Retaining Wall
SHEET NO. ____ OF ____ SCALE ____
CALCULATED BY YL DATE 12/1/2017
CHECKED BY ____ DATE ____

Table of Contents

Summary	Pg. 3
24-86 Block - Summary Drawings	Pg. 4 - 6
24SF Block - Summary Drawings	Pg. 7 - 9
24-62 Block - Summary Drawings	Pg. 10 - 12
6-28 Block - Summary Drawings	Pg. 13 - 15
24-86 Block Analysis - 15 ft Max. Height Gravity Wall	Pg. 16 - 37
24 SF Block Analysis - 36.5 ft Max. Height Reinforced Wall	Pg. 38 - 62
24 SF Block Analysis - 50 ft Max. Height Reinforced Wall	Pg. 63 - 88
6-28 Block Analysis - 6ft Max. Height Gravity Wall	Pg. 89 - 103
6-28 Block Analysis - 50ft Max. Height Reinforced Wall	Pg. 104 - 124
Handling Analysis - 24-86 Block	Pg. 125 - 128

Item 5.

DELTA
SPECIALTY PRECAST CONCRETE ENGINEERS
860 Hooper Road, Endwell, NY 13760
www.delta-eas.com
Phone: (607) 231-6600
Fax: (607) 231-6650

JOB 2017.478.001
DESCRIPTION Stonestrong Retaining Wall
SHEET NO. ____ OF ____ SCALE ____
CALCULATED BY YL DATE 11/22/2017
CHECKED BY ____ DATE ____

Summary

Analysis performed:

1. 24-86 block is analyzed using a maximum gravity wall height of 15ft.
2. 24SF block is analyzed using maximum reinforced wall height of 36.5ft and 50ft.
3. 6-28 block is analyzed using a maximum gravity wall height of 6ft and reinforced wall height of 50ft.
4. All blocks are analyzed for the internal at rest pressure from the infill and active pressure from the retained soil. A unit weight of 100pcf and ko=0.5 are used for the infill and 120pcf and ka=0.33 are used for the retained soil.
5. Risa-3D program is used to performed the analyses.
6. Handling analysis is perfomed using the controlling 24-86 blocks.
7. The analyses are performed per AASHTO LRFD and ACI 318-11.

Conclusions

1. Analysis results of 24-86 and 24 SF indicate that for a maximum wall height of 36.5ft, both 24-86 and 24 SF blocks require shrinkage and temperature reinforcing only.
2. For 24SF block with a maximum wall height of 50ft, rear face reinforcing is required for bending moment.
3. For 6-28 block with a maximum wall height of 6ft, only shrinkage and temperature reinforcing is required.
4. For 6-28 block with a maximum wall height of 50ft, web reinforcing is required for tension.

Required shrinkage and temperature reinforcing area is 0.11 in^2/ft or W4XW4 - 4X4 mesh.

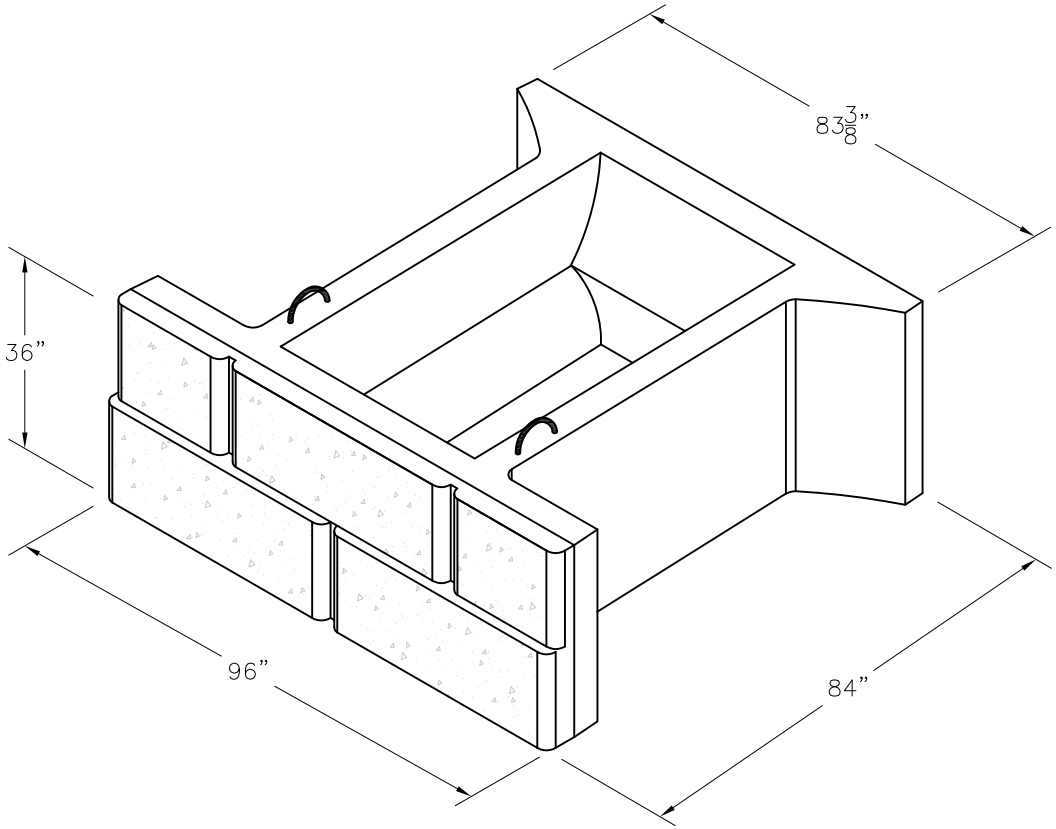

STONE STRONG 24–86 UNIT

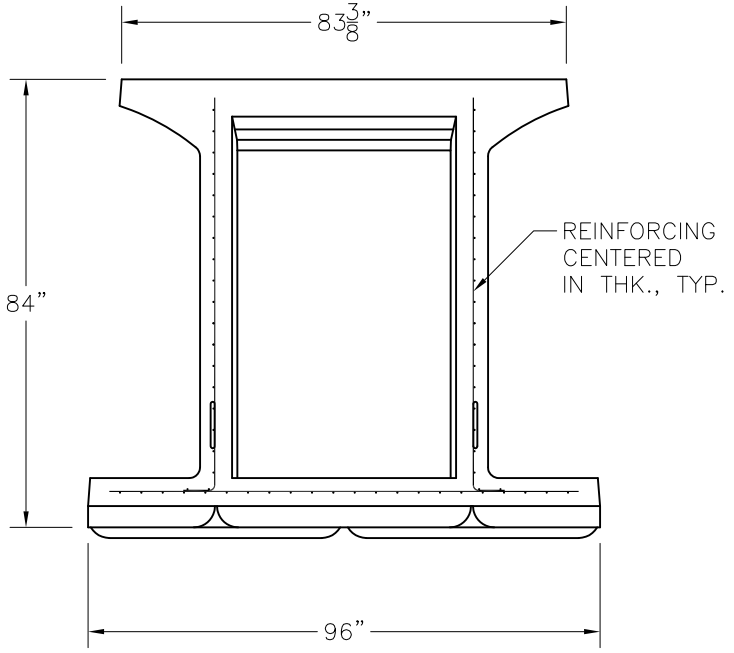

24–86 UNIT
PLAN VIEW

DISCLAIMER: These typical details are preliminary and conceptual in nature. They are provided for general information purposes only. Anyone making use of these details and related information does so at their own risk and assumes all liability for such use. Site specific design should be performed by a licensed Professional Engineer based on actual site conditions, materials, and local practices. Stone Strong LLC retains al common law, statutory, and other reserved rights to these drawings including the copyright. Limited license is granted to copy, reproduce, or modify the details to prepare construction drawings for Stone Strong retaining walls. Stone Strong LLC makes no warranties, either expressed or implied, of merchantability or fitness for any particular purpose, and accepts no responsibility for the accuracy, suitability, or completeness of information contained herein.

REV.NO.	DATE	REVISION

PREPARED FOR: STONE STRONG SYSTEMS
www.stonestrong.com

PREPARED BY:
DELTA
SPECIALTY PRECAST CONCRETE ENGINEERS
860 HOOPER ROAD, ENDWELL, NY 13760–1564
TEL: (607) 231–6600 FAX: (607) 231–6650

DATE: 11/22/17 | SHEET TITLE: BLOCK GEOMETRY | DRWN BY: YL | CKD BY:
SCALE: N.T.S.
PROJECT: STONE STRONG 24–86 UNITS 15FT MAX. WALL HEIGHT
CONTRACTOR: | DWG. I.D.
DELTA PROJ. NO.: 2017.478.001 | SHT. NO. 285

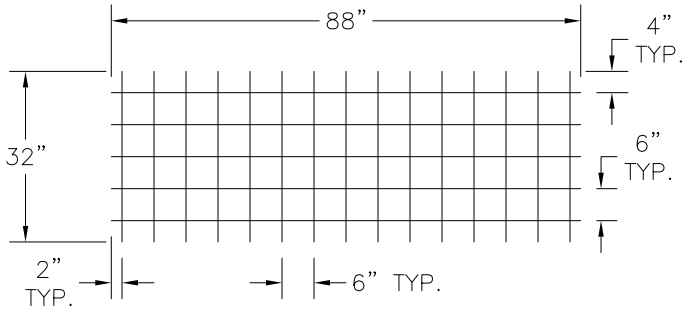

24–86 UNIT – FRONT FACE MAT

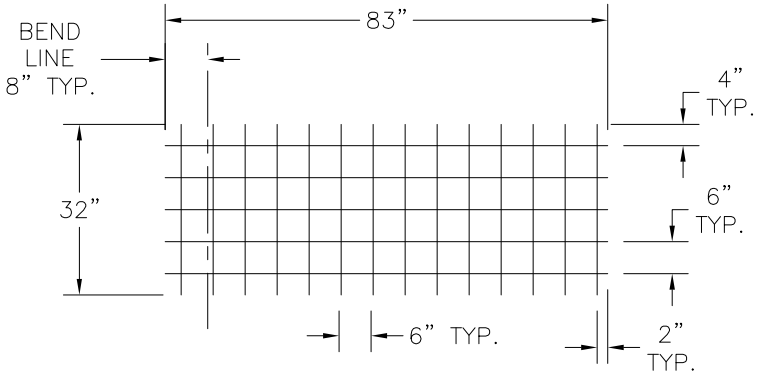

24–86 UNIT – WEB MATS – 2 REQ’D

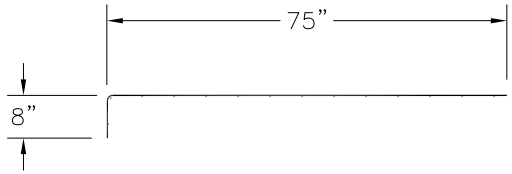

24–86 UNIT – WEB MATS – PLAN VIEW

NOTES

1. ALL REINFORCING = W8xW8 – 6x6 WWF
2. REINFORCEMENT = WWF PER ASTM A185/A497/A1064 GRADE 65

REV.NO.	DATE	REVISION

PREPARED FOR:

STONE STRONG SYSTEMS®

www.stonestrong.com

PREPARED BY:

DELTA
SPECIALTY PRECAST CONCRETE ENGINEERS
860 HOOPER ROAD, ENDWELL, NY 13760–1564
TEL: (607) 231–6600 FAX: (607) 231–6650

DATE: 11/22/17	SHEET TITLE: WWF – REINFORCING DETAILS	DRWN BY: YL	
SCALE: N.T.S.		CKD BY:	

PROJECT: STONE STRONG
24–86 UNITS
15FT MAX. WALL HEIGHT

CONTRACTOR:	DWG. I.D.
DELTA PROJ. NO.: 2017.478.001	SHT. NO. 286

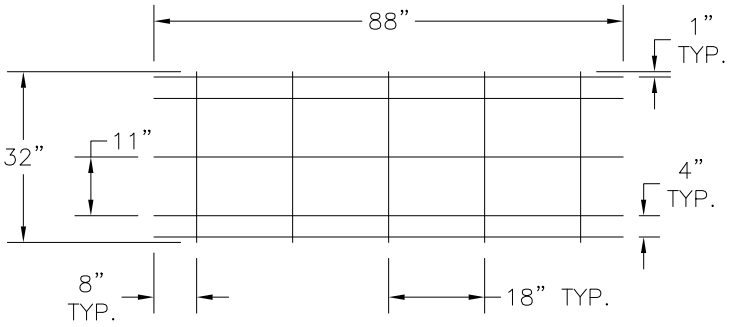

24–86 UNIT – FRONT FACE REBAR

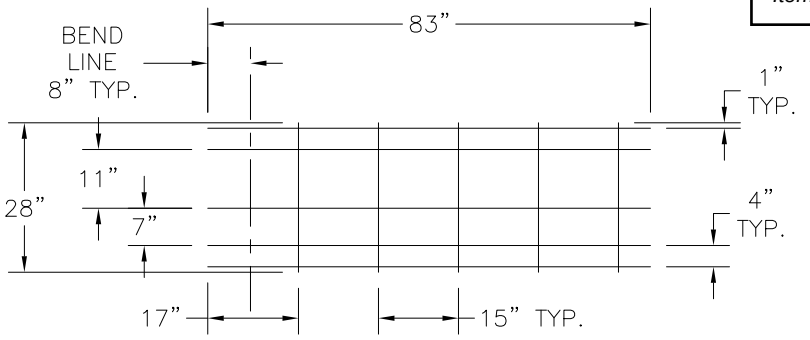

24–86 UNIT – WEB REBAR – 2 REQ'D

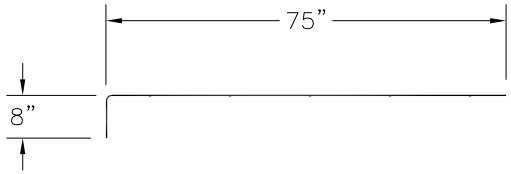

24–86 UNIT – WEB REBAR – PLAN VIEW

NOTES

1. ALL REINFORCING = #4 BARS (SPACED AS SHOWN)
2. REINFORCEMENT = BAR PER ASTM A615, GRADE 60

REV.NO.	DATE	REVISION

PREPARED FOR:

STONE STRONG SYSTEMS®
www.stonestrong.com

PREPARED BY:

DELTA
SPECIALTY PRECAST CONCRETE ENGINEERS
860 HOOPER ROAD, ENDWELL, NY 13760–1564
TEL: (607) 231–6600 FAX: (607) 231–6650

DATE: 11/22/17	SHEET TITLE: REBAR – REINFORCING DETAILS	DRWN BY: YL	
SCALE: N.T.S.		CKD BY:	

PROJECT:
STONE STRONG
24–86 UNITS
15FT MAX. WALL HEIGHT

CONTRACTOR:	DWG. I.D.
DELTA PROJ. NO.: 2017.478.001	SHT. NO. 287

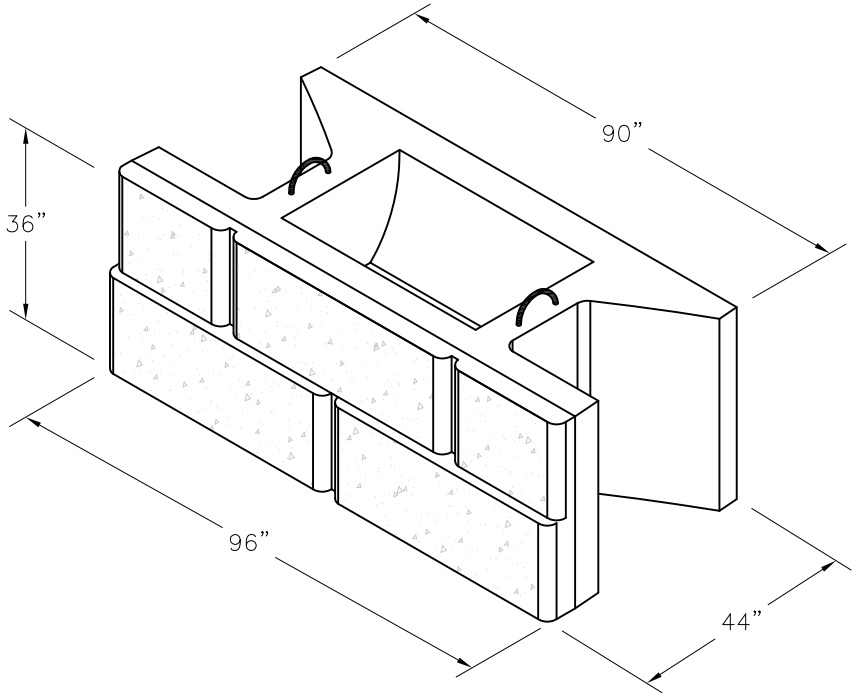

STONE STRONG 24SF UNIT

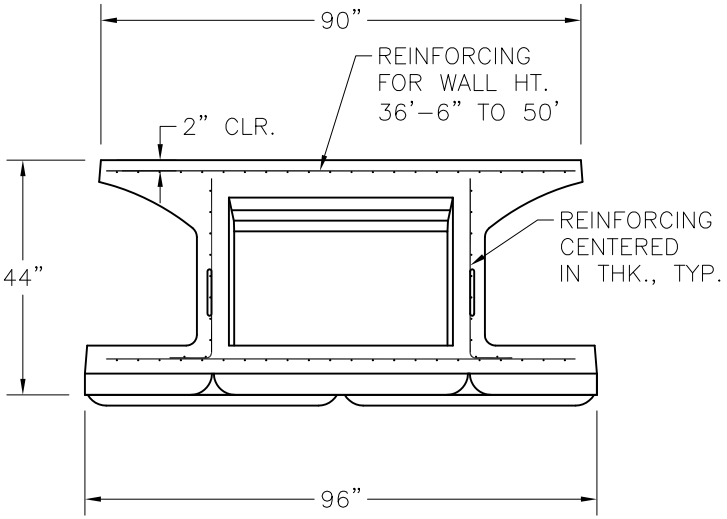

24SF UNIT
PLAN VIEW

DISCLAIMER: These typical details are preliminary and conceptual in nature. They are provided for general information purposes only. Anyone making use of these details and related information does so at their own risk and assumes all liability for such use. Site specific design should be performed by a licensed Professional Engineer based on actual site conditions, materials, and local practices. Stone Strong LLC retains al common law, statutory, and other reserved rights to these drawings including the copyright. Limited license is granted to copy, reproduce, or modify the details to prepare construction drawings for Stone Strong retaining walls. Stone Strong LLC makes no warranties, either expressed or implied, of merchantability or fitness for any particular purpose, and accepts no responsibility for the accuracy, suitability, or completeness of information contained herein.

REV.NO.	DATE	REVISION

PREPARED FOR:

STONE STRONG SYSTEMS®

www.stonestrong.com

PREPARED BY:

DELTA
SPECIALTY PRECAST CONCRETE ENGINEERS
860 HOOPER ROAD, ENDWELL, NY 13760–1564
TEL: (607) 231–6600 FAX: (607) 231–6650

DATE: 11/22/17
SCALE: N.T.S.
SHEET TITLE: BLOCK GEOMETRY
DRWN BY: YL
CKD BY:
PROJECT: STONE STRONG 24SF UNITS 50FT MAX. WALL HEIGHT
CONTRACTOR:
DWG. I.D.
DELTA PROJ. NO.: 2017.478.001
SHT. NO.

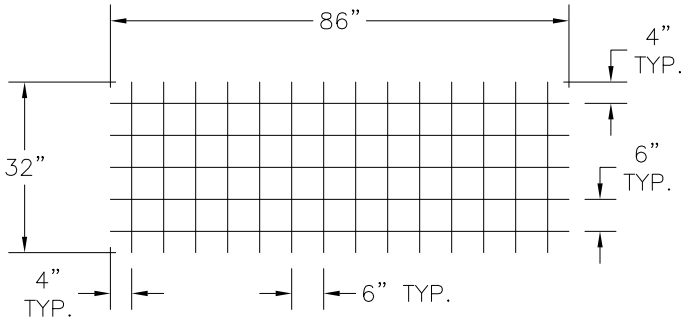

24SF UNIT – FRONT FACE MAT

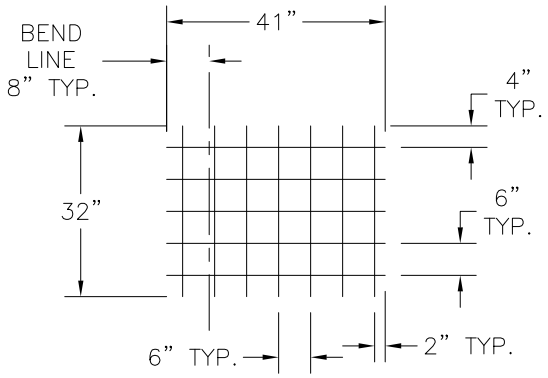

24SF UNIT – WEB MATS – 2 REQ'D

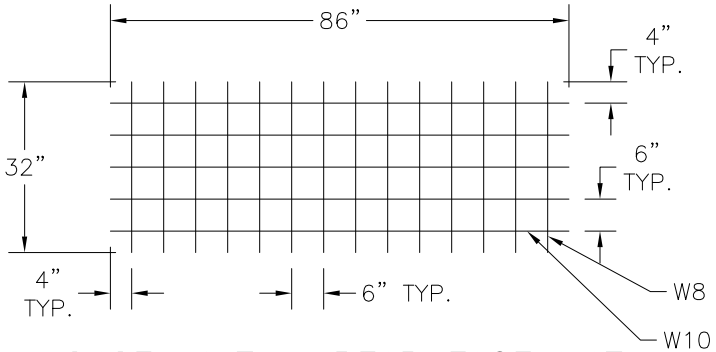

24SF UNIT – REAR FACE MAT
FOR WALL HEIGHT 36'–6" TO 50'–0"

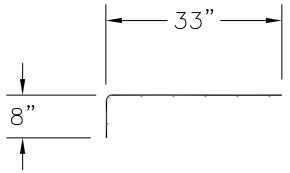

24SF UNIT – WEB MATS – PLAN VIEW

NOTES

1. ALL REINFORCING = W8xW8 – 6x6 WWF UNO
2. REINFORCEMENT = WWF PER ASTM A185/A497/A1064 GRADE 65

REV.NO.	DATE	REVISION

PREPARED FOR: STONE STRONG SYSTEMS
www.stonestrong.com

PREPARED BY:
DELTA
SPECIALTY PRECAST CONCRETE ENGINEERS
860 HOOPER ROAD, ENDWELL, NY 13760–1564
TEL: (607) 231–6600 FAX: (607) 231–6650

DATE: 11/22/17
SCALE: N.T.S.
SHEET TITLE: WWF – REINFORCING DETAILS
DRWN BY: YL
CKD BY:
PROJECT: STONE STRONG 24SF UNITS 50FT MAX. WALL HEIGHT
CONTRACTOR:
DWG. I.D.
DELTA PROJ. NO.: 2017.478.001
SHT. NO.

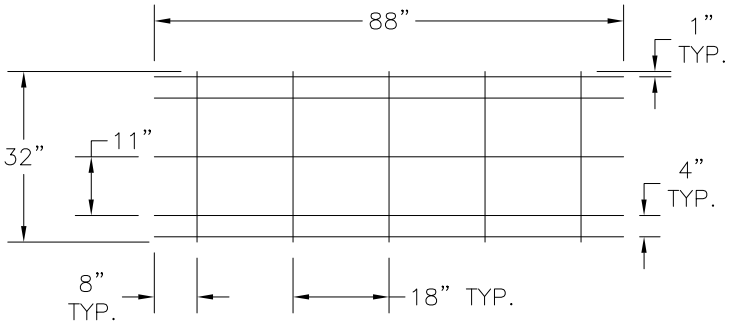

24SF UNIT – FRONT FACE REBAR

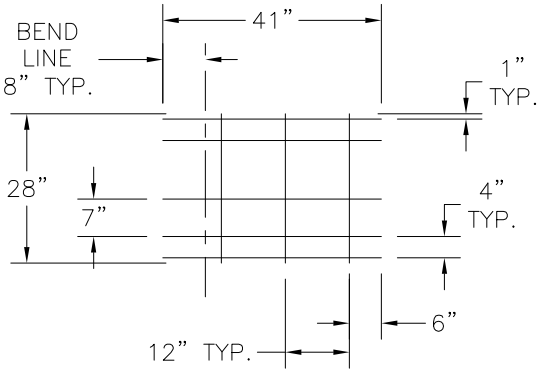

24SF UNIT – WEB REBAR – 2 REQ'D

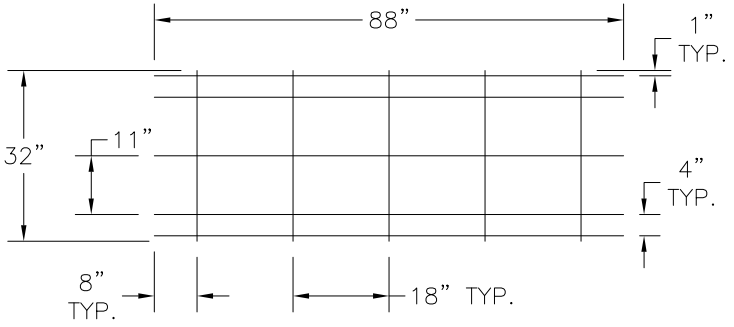

24SF UNIT – REAR FACE REBAR

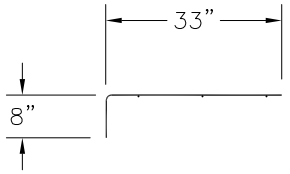

24SF UNIT – WEB REBAR – PLAN VIEW

NOTES

1. ALL REINFORCING = #4 BARS (SPACED AS SHOWN)
2. REINFORCEMENT = BAR PER ASTM A615, GRADE 60

REV.NO.	DATE	REVISION

PREPARED FOR:

STONE STRONG SYSTEMS®
www.stonestrong.com

PREPARED BY:

DELTA
SPECIALTY PRECAST CONCRETE ENGINEERS
860 HOOPER ROAD, ENDWELL, NY 13760-1564
TEL: (607) 231-6600 FAX: (607) 231-6650

DATE: 11/22/17	SHEET TITLE: REBAR – REINFORCING DETAILS	DRWN BY: YL	
SCALE: N.T.S.		CKD BY:	

PROJECT: STONE STRONG
24SF UNITS
50FT MAX. WALL HEIGHT

CONTRACTOR:	DWG. I.D.
DELTA PROJ. NO.: 2017.478.001	SHT. NO. 290

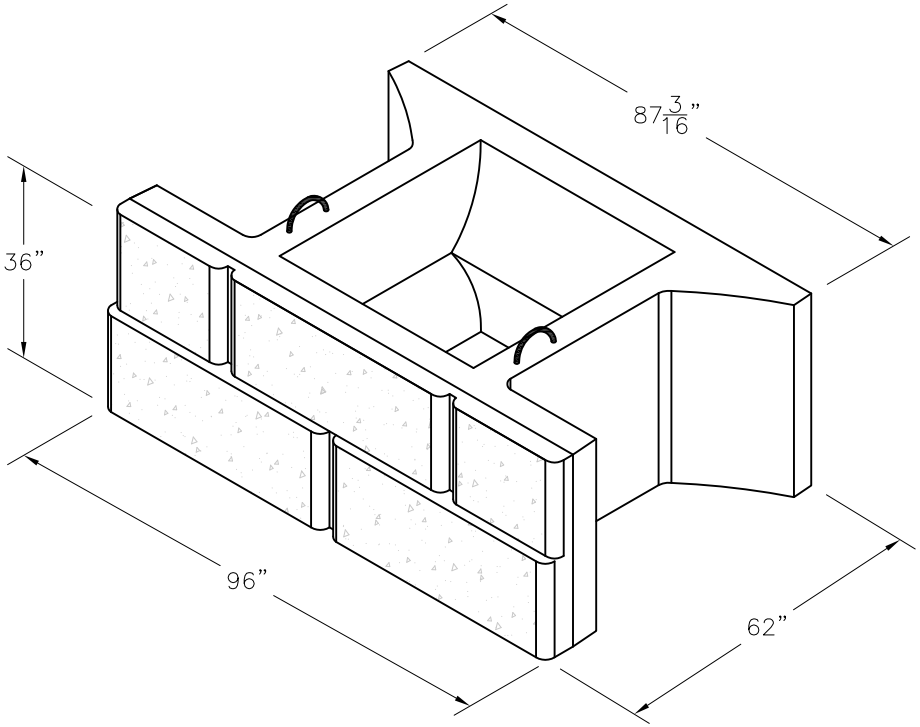

STONE STRONG 24–62 UNIT

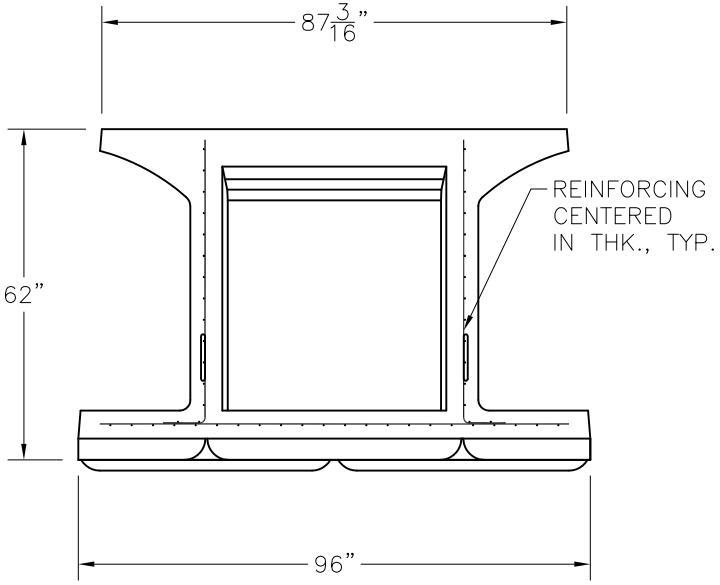

24–62 UNIT
PLAN VIEW

DISCLAIMER: These typical details are preliminary and conceptual in nature. They are provided for general information purposes only. Anyone making use of these details and related information does so at their own risk and assumes all liability for such use. Site specific design should be performed by a licensed Professional Engineer based on actual site conditions, materials, and local practices. Stone Strong LLC retains al common law, statutory, and other reserved rights to these drawings including the copyright. Limited license is granted to copy, reproduce, or modify the details to prepare construction drawings for Stone Strong retaining walls. Stone Strong LLC makes no warranties, either expressed or implied, of merchantability or fitness for any particular purpose, and accepts no responsibility for the accuracy, suitability, or completeness of information contained herein.

REV.NO.	DATE	REVISION

PREPARED FOR: STONE STRONG SYSTEMS
www.stonestrong.com

PREPARED BY:
DELTA
SPECIALTY PRECAST CONCRETE ENGINEERS
860 HOOPER ROAD, ENDWELL, NY 13760–1564
TEL: (607) 231–6600 FAX: (607) 231–6650

DATE: 11/22/17
SCALE: N.T.S.
SHEET TITLE: BLOCK GEOMETRY
DRWN BY: YL
CKD BY:
PROJECT: STONE STRONG 24–62 UNITS 15FT MAX. WALL HEIGHT
CONTRACTOR:
DWG. I.D.
DELTA PROJ. NO.: 2017.478.001
SHT. NO. 291

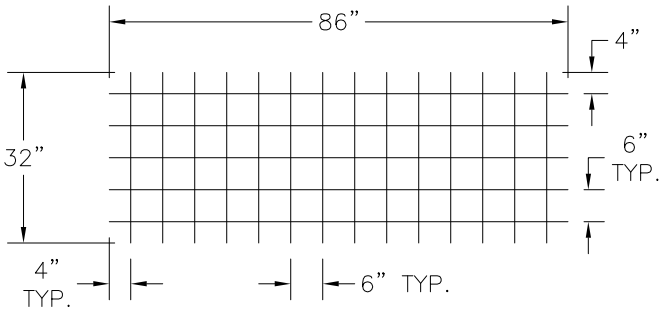

24–62 UNIT – FRONT FACE MAT

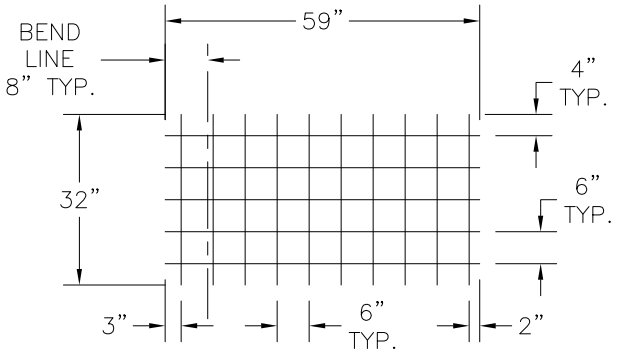

24–62 UNIT – WEB MATS – 2 REQ’D

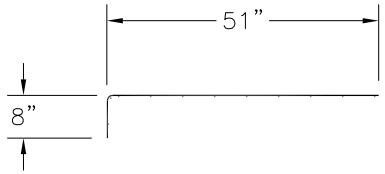

24–62 UNIT – WEB MATS – PLAN VIEW

NOTES

1. ALL REINFORCING = W8xW8 – 6x6 WWF
2. REINFORCEMENT = WWF PER ASTM A185/A497/A1064 GRADE 65

REV.NO.	DATE	REVISION

PREPARED FOR:

STONE STRONG SYSTEMS®

www.stonestrong.com

PREPARED BY:

DELTA
SPECIALTY PRECAST CONCRETE ENGINEERS
860 HOOPER ROAD, ENDWELL, NY 13760–1564
TEL: (607) 231–6600 FAX: (607) 231–6650

DATE: 11/22/17	SHEET TITLE: WWF – REINFORCING DETAILS	DRWN BY: YL	
SCALE: N.T.S.		CKD BY:	
PROJECT: STONE STRONG 24–62 UNITS 15FT MAX. WALL HEIGHT			
CONTRACTOR:		DWG. I.D.	
DELTA PROJ. NO.: 2017.478.001		SHT. NO.	292

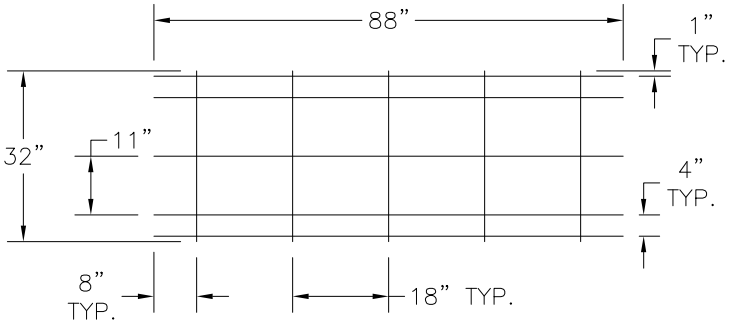

24–62 UNIT – FRONT FACE REBAR

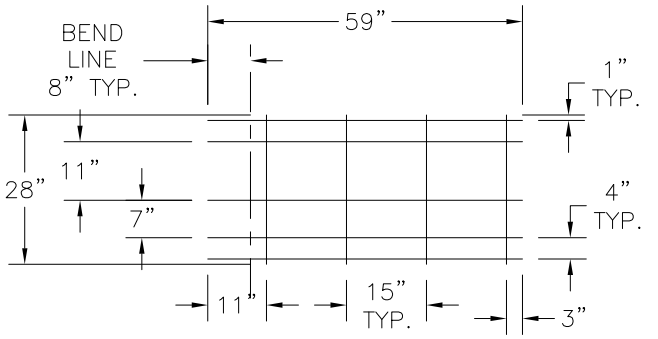

24–62 UNIT – WEB REBAR – 2 REQ'D

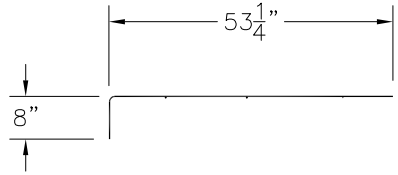

24–62 UNIT – WEB REBAR – PLAN VIEW

NOTES

1. ALL REINFORCING = #4 BARS (SPACED AS SHOWN)
2. REINFORCEMENT = BAR PER ASTM A615, GRADE 60

REV.NO.	DATE	REVISION

PREPARED FOR:

STONE STRONG SYSTEMS®
www.stonestrong.com

PREPARED BY:

DELTA
SPECIALTY PRECAST CONCRETE ENGINEERS
860 HOOPER ROAD, ENDWELL, NY 13760–1564
TEL: (607) 231–6600 FAX: (607) 231–6650

DATE: 11/22/17	SHEET TITLE: REBAR – REINFORCING DETAILS		DRWN BY: YL
SCALE: N.T.S.			CKD BY:
PROJECT: STONE STRONG 24–62 UNITS 15FT MAX. WALL HEIGHT			
CONTRACTOR:			DWG. I.D.
DELTA PROJ. NO.: 2017.478.001			SHT. NO. 293

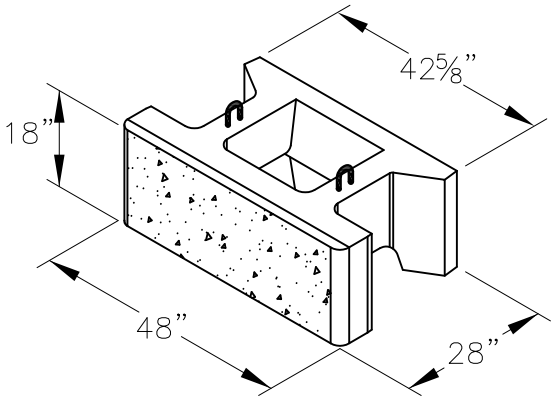

STONE STRONG 6–28 UNIT

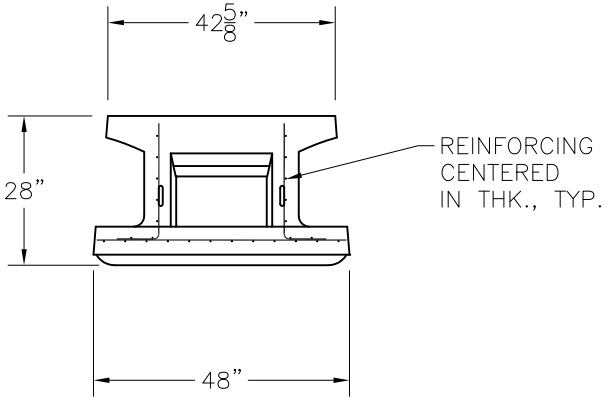

6–28 UNIT
PLAN VIEW

DISCLAIMER: These typical details are preliminary and conceptual in nature. They are provided for general information purposes only. Anyone making use of these details and related information does so at their own risk and assumes all liability for such use. Site specific design should be performed by a licensed Professional Engineer based on actual site conditions, materials, and local practices. Stone Strong LLC retains al common law, statutory, and other reserved rights to these drawings including the copyright. Limited license is granted to copy, reproduce, or modify the details to prepare construction drawings for Stone Strong retaining walls. Stone Strong LLC makes no warranties, either expressed or implied, of merchantability or fitness for any particular purpose, and accepts no responsibility for the accuracy, suitability, or completeness of information contained herein.

REV.NO.	DATE	REVISION

PREPARED FOR: STONE STRONG SYSTEMS
www.stonestrong.com

PREPARED BY:
DELTA
SPECIALTY PRECAST CONCRETE ENGINEERS
860 HOOPER ROAD, ENDWELL, NY 13760–1564
TEL: (607) 231–6600 FAX: (607) 231–6650

DATE: 11/22/17	SHEET TITLE: BLOCK GEOMETRY		DRWN BY: YL
SCALE: N.T.S.			CKD BY:

PROJECT: STONE STRONG
6–28 UNITS
50FT MAX. WALL HEIGHT

CONTRACTOR:	DWG. I.D.
DELTA PROJ. NO.: 2017.478.001	SHT. NO. 294

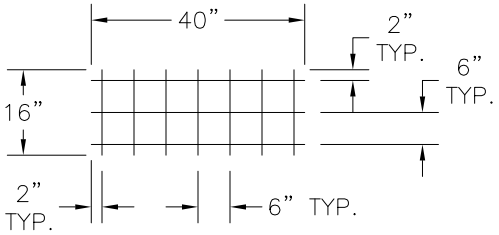

6–28 UNIT – FRONT FACE MAT

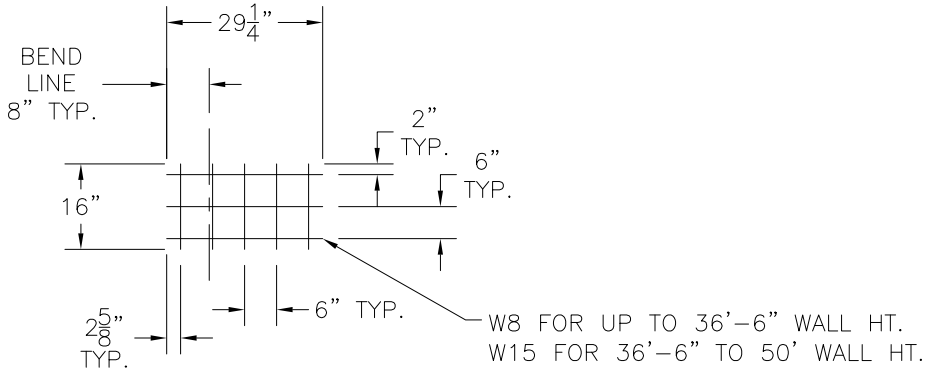

6–28 UNIT – WEB MATS – 2 REQ'D

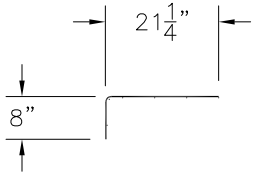

6–28 UNIT – WEB MATS – PLAN VIEW

NOTES

1. ALL REINFORCING = W8xW8 – 6x6 WWF UNO
2. REINFORCEMENT = WWF PER ASTM A185/A497/A1064 GRADE 65

REV.NO.	DATE	REVISION

PREPARED FOR: STONE STRONG SYSTEMS® www.stonestrong.com

PREPARED BY:

DELTA
SPECIALTY PRECAST CONCRETE ENGINEERS
860 HOOPER ROAD, ENDWELL, NY 13760–1564
TEL: (607) 231–6600 FAX: (607) 231–6650

DATE: 11/22/17	SHEET TITLE: WWF – REINFORCING DETAILS	DRWN BY: YL	
SCALE: N.T.S.		CKD BY:	
PROJECT: STONE STRONG 6–28 UNITS 50FT MAX. WALL HEIGHT			
CONTRACTOR:		DWG. I.D.	
DELTA PROJ. NO.: 2017.478.001		SHT. NO.	295

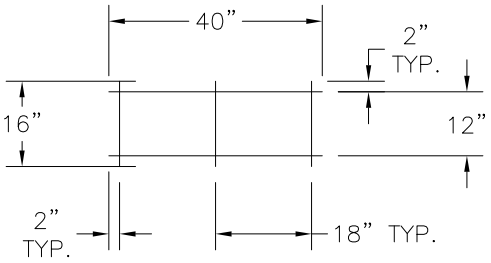

6–28 UNIT – FRONT FACE REBAR

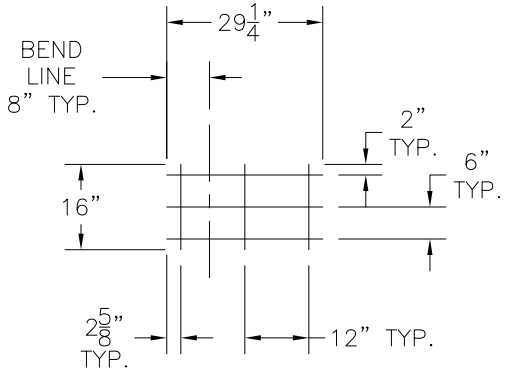

6–28 UNIT – WEB REBAR – 2 REQ'D

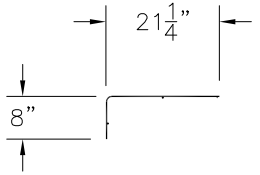

6–28 UNIT – WEB REBAR – PLAN VIEW

NOTES

1. ALL REINFORCING = #4 BARS (SPACED AS SHOWN)
2. REINFORCEMENT = BAR PER ASTM A615, GRADE 60

REV.NO.	DATE	REVISION

PREPARED FOR:

STONE STRONG SYSTEMS®
www.stonestrong.com

PREPARED BY:

DELTA
SPECIALTY PRECAST CONCRETE ENGINEERS
860 HOOPER ROAD, ENDWELL, NY 13760–1564
TEL: (607) 231–6600 FAX: (607) 231–6650

DATE: 11/22/17	SHEET TITLE: REBAR – REINFORCING DETAILS	DRWN BY: YL	
SCALE: N.T.S.		CKD BY:	

PROJECT: STONE STRONG
6–28 UNITS
50FT MAX. WALL HEIGHT

CONTRACTOR:		DWG. I.D.
DELTA PROJ. NO.: 2017.478.001		SHT. NO. 296

DELTA
SPECIALTY PRECAST CONCRETE ENGINEERS
860 Hooper Road, Endwell, NY 13760
www.delta-eas.com
Phone: (607) 231-6600
Fax: (607) 231-6650

JOB	2017.478.001		
DESCRIPTION	Gravity Wall - 24-86 Blocks		
SHEET NO.	OF	SCALE	
CALCULATED BY	YL	DATE	6/8/2017
CHECKED BY		DATE	

Gravity Wall - Maximum 15ft Wall Height
24-86 Blocks

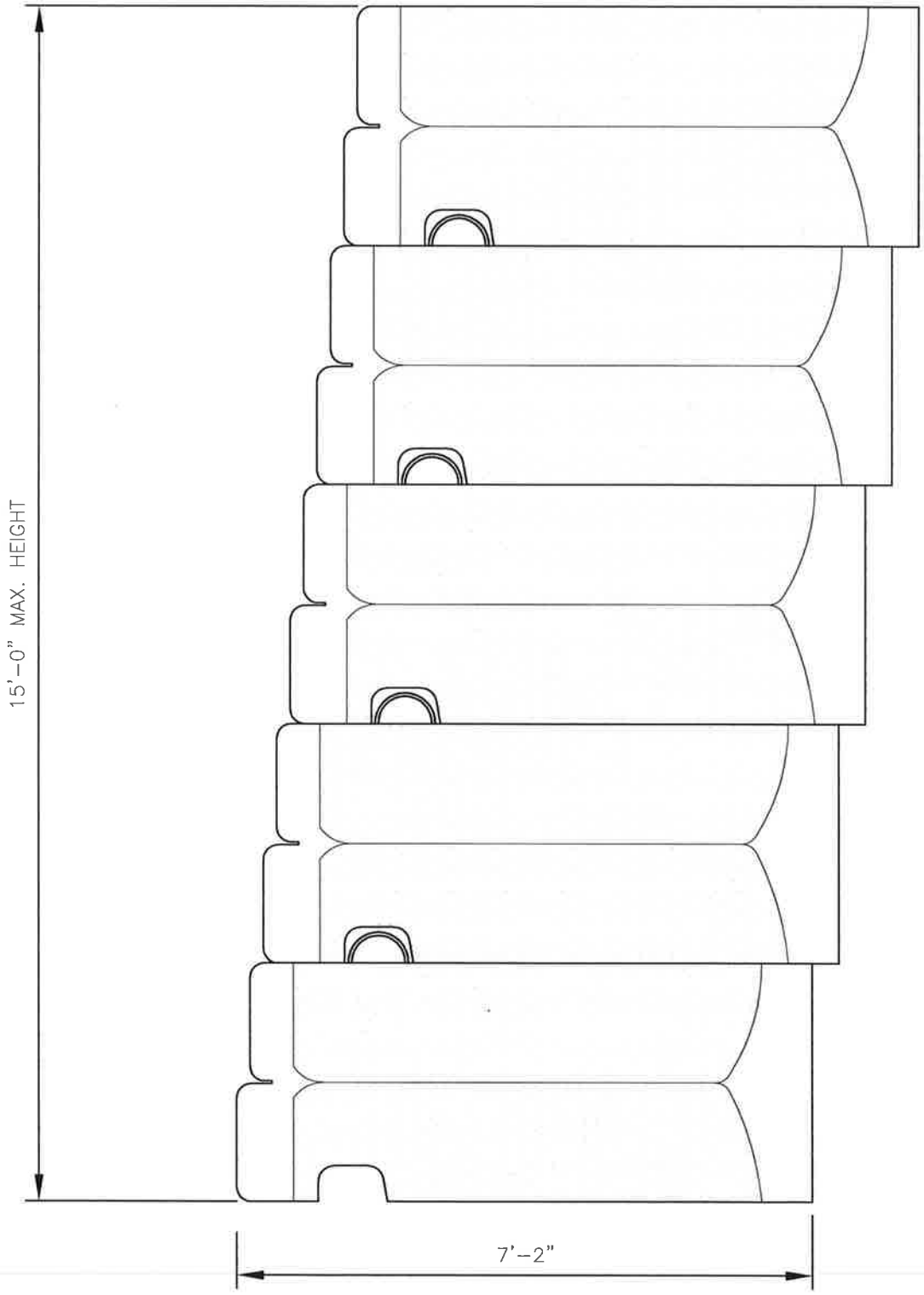

GRAVITY WALL
24-86 UNIT

NOTES:
1. SEE FACE AND WEB MESH DETAILS FOR REINFORCEMENT GRID.
2. CHISELLED GRANITE STYLE HAS 4 DIFFERENT FACE PATTERNS ON 24–86 BLOCKS. INSTALL A, B, C, & D PATTERNS AT RANDOM IN WALL.

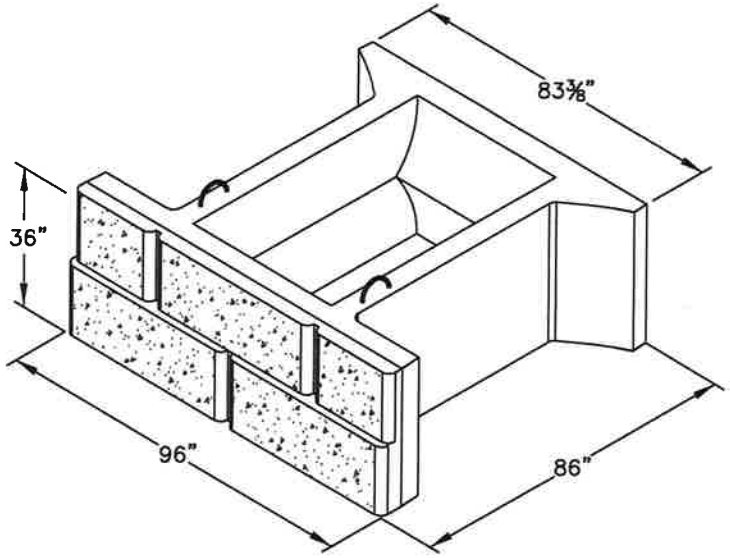

STONE STRONG 24–86 UNIT

NOT TO SCALE

CHECK ON AVAILABILITY OF ALL UNITS w/ LOCAL PRODUCER/ DEALER. SOME UNITS MAY HAVE LIMITED AVAILABILITY.

DISCLAIMER:
These typical details are preliminary and conceptual in nature. They are provided for general information purposes only. Anyone making use of these details and related information does so at their own risk and assumes all liability for such use. Site specific design should be performed by a licensed Professional Engineer based on actual site conditions, materials, and local practices.

Stone Strong LLC retains al common law, statutory, and other reserved rights to these drawings including the copyright. Limited license is granted to copy, reproduce, or modify the details to prepare construction drawings for Stone Strong retaining walls. Stone Strong LLC makes no warranties, either expressed or implied, of merchantability or fitness for any particular purpose, and accepts no responsibility for the accuracy, suitability, or completeness of information contained herein.

STONE STRONG SYSTEMS

www.stonestrong.com

PROJECT

COMPONENTS
STONE STRONG SYSTEMS

DATE: 2/10/16 | FILE: 09_Block.24–86

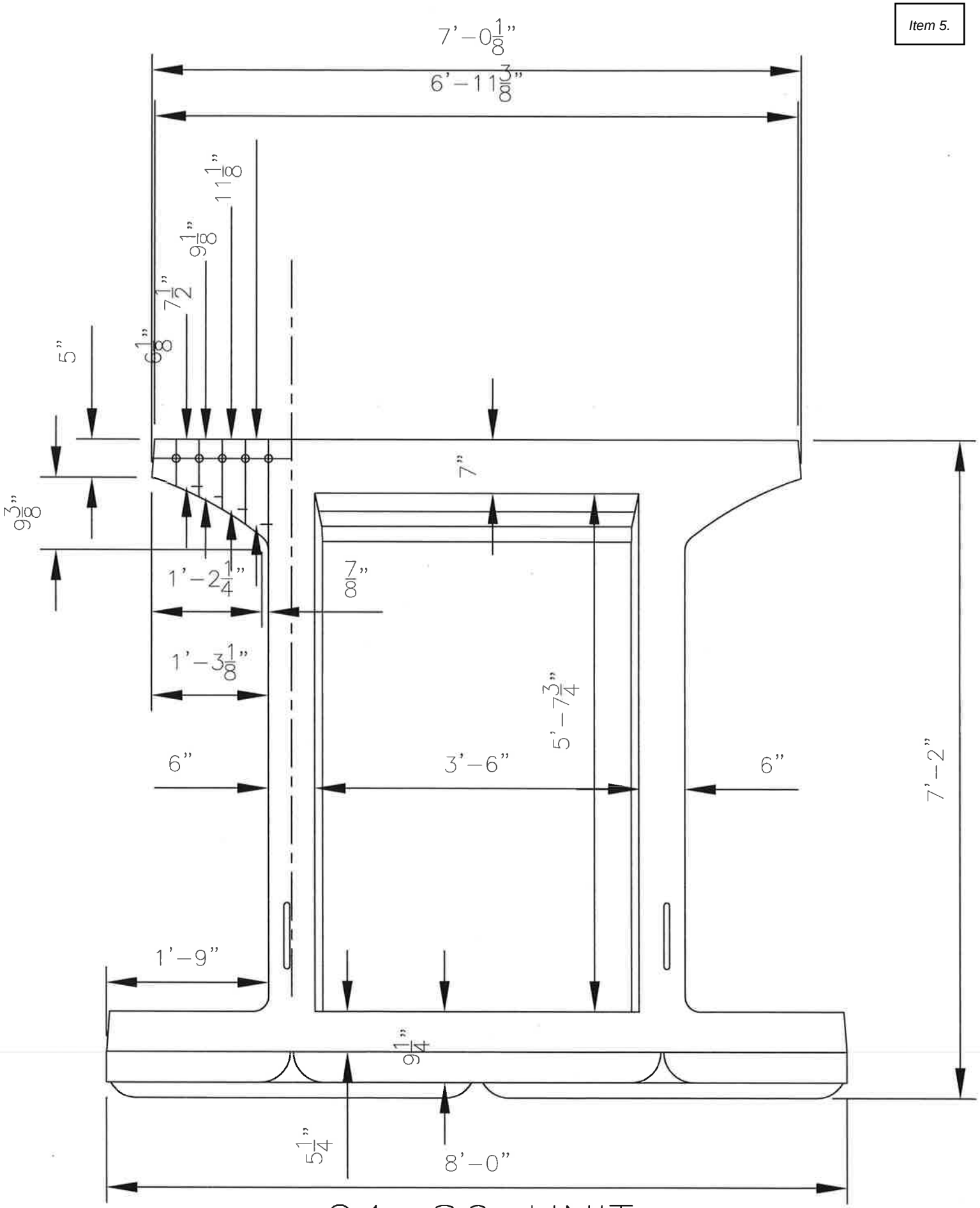
7'-0 1/8"
6'-11 3/8"
1 1/8"
9 1/8"
7 1/2"
6 1/8"
5"
9 3/8"
7"
1'-2 1/4"
7/8"
1'-3 1/8"
5'-7 3/4"
6"
3'-6"
6"
7'-2"
1'-9"
9 1/4"
5 1/4"
8'-0"

24-86 UNIT

STONE STRONG SYSTEMS®

STONE STRONG GRAVITY CALCULATIONS - ver 5.7

Project Name: 24-86 Gravity Retaining Wall
Location:
Job#: 2017.478.001
Section:
Calc by: YL

6/15/17 13:34

Notes

Wall Configuration

			setback (in)		modular units		unit fill		soil wedge		CIP Extension		Internal Stability FS		Seismic Internal FS	
unit	w (in)	h (ft)	face	tail	Wb (lb)	xb (in)	Wa (lb)	xa (in)	Ws (lb)	xs (in)	we (in)	h_t	Topple	Shear	Topple	Shear
24-86	86.0	3.00	16.0	16.0	962	54.0	1,438	59.1					16.29	5.79		OK!
24-86	86.0	3.00	12.0	12.0	962	50.0	1,438	55.1					7.09	4.16		OK!
24-86	86.0	3.00	8.0	8.0	962	46.0	1,438	51.1					4.03	3.13		OK!
24-86	86.0	3.00	4.0	4.0	962	42.0	1,438	47.1					2.67	2.52		OK!
24-86	86.0	3.00	0.0	0.0	962	38.0	1,438	43.1					**External Stability OK!**			
	86.0	15.00	16.0	16.0	4,808	46.0	7,192	51.1	0	0.0	12,000					

backfill height **15.00** feet ω= 6.34 deg interface friction angle
exposed height 14.25 feet ω'= 6.34 deg δ 15.0 deg

Retained Soil
γ **120** pcf
ϕ **30** deg

Foundation Soil
γ **120** pcf
c' psf
ϕ **30** deg
(if specified)
allowable bearing pressure **n/a** psf (net)

base embedment **9** in
base thickness **9** in
base material **agg**
toe slope H:1V slope

Aggregate Unit Fill
γ **100** pcf

composite friction coefficient μ_b 0.69

301

© STONE STRONG SYSTEMS

STONE STRONG SYSTEMS®

STONE STRONG GRAVITY CALCULATIONS - ver 5.7

Project Name: 24-86 Gravity Retaining Wall
Location:
Job#: 2017.478.001
Section:
Calc by: YL

Seismic Load Ss 0.00 G site class (A to E or 1) D Fa 1.60 k_h 0.00

Backfill Slope & Surcharge

		rise in grade	LL surcharge	tier height
length 1	30 feet (horizontal)	ft	240 psf	ft
length 2	feet (horizontal)	ft	psf	ft
length 3	feet (horizontal)	ft	psf	ft
length 4	feet (horizontal)	ft	psf	

effective slope H:1V slope β 0.0 deg avg q 232 psf
failure plane α 54.29 deg zone of influence 17.95 ft

Analysis

K_a =	0.260		Q_{lh} =	924	lb	ΔK_{AE} =	0.000	e=	1.14 ft
P_h =	3465	lb	Q_{lv} =	141	lb	P_{IR} =	0 lb	B_f' =	5.47 ft
P_v =	528	lb	R_s =	7233	lb	ΔP_{AEh} =	0 lb	e_{eq}=	0.65 ft
			q_{ult} =	10,664	psf	ΔP_{AEv} =	0 lb	$B_{f\,eq}'$ =	6.45 ft

Results

				Internal Safety Factors
Overturning:	Desired FS = 1.5	**Actual FS = 1.98**	***OK!***	Desired FS = 1.5
Sliding:	Desired FS = 1.5	**Actual FS = 1.65**	***OK!***	Desired FS = 1.5
Bearing Capacity:	Desired FS = 2	**Actual FS = 4.42**	***OK!***	
	q_{all} = 5,332 psf	q_c = 2,410 psf		

Desired FS =
Desired FS =

© STONE STRONG SYSTEMS

STONE STRONG SYSTEMS®

STONE STRONG GRAVITY CALCULATIONS - ver 5.7

Project Name:	24-86 Gravity Retaining Wall
Location:	
Job#:	2017.478.001
Section:	
Calc by:	YL

Ground Surface & Trial Wedge Plot

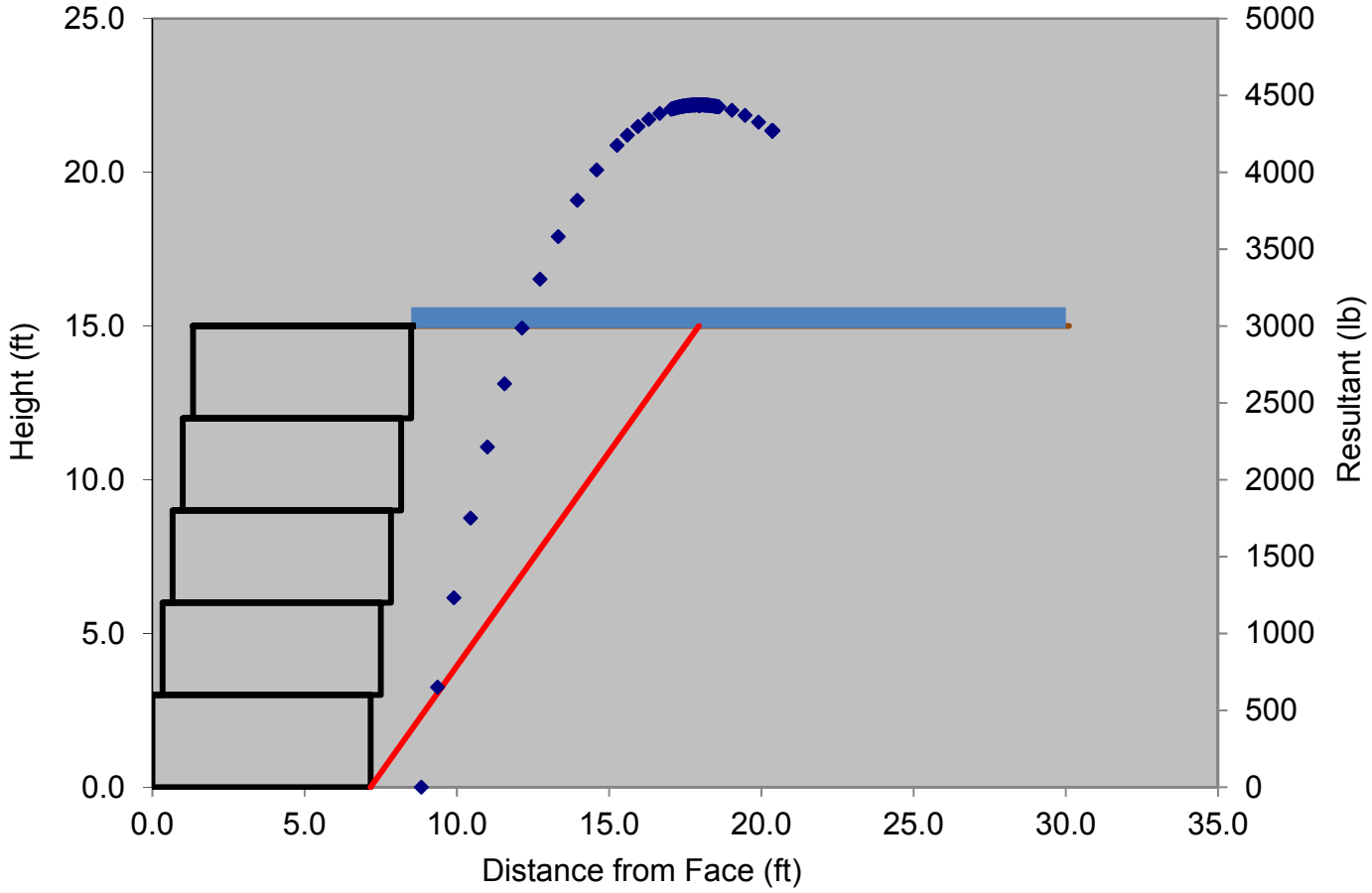

© STONE STRONG SYSTEMS

STONE STRONG SYSTEMS®

STONE STRONG GRAVITY CALCULATIONS - ver 5.7

Project Name: 24-86 Gravity Retaining Wall
Location:
Job#: 2017.478.001
Section:
Calc by: YL

(AASHTO 6th Edition, 2012)

6/15/17 13:36

Notes

Wall Configuration

			setback (in)		modular units		unit fill		soil wedge		CIP Extension		
unit	w (in)	h (ft)	face	tail	Wb (lb)	xb (in)	Wa (lb)	xa (in)	Ws (lb)	xs (in)	we (in)	h_t	Internal
6	44.0	1.50	16.0	-26.0	400	37.0	269	39.5	238	72.7			Internal Stability OK!
24-86	86.0	3.00	12.0	12.0	962	52.0	1,438	57.1	0	0.0			Internal Stability OK!
24-86	86.0	3.00	8.0	8.0	962	48.0	1,438	53.1	0	0.0			Internal Stability OK!
24-86	86.0	3.00	4.0	4.0	962	44.0	1,438	49.1	0	0.0			Internal Stability OK!
24-86	86.0	3.00	0.0	0.0	962	40.0	1,438	45.1	0	0.0			**External Stability OK!**
	86.0	13.50	16.0	-26.0	4,247	45.2	6,022	50.6	238	72.7			

backfill height 13.50 feet ω= 6.34 deg interface friction angle
exposed height 12.75 feet ω'= -9.12 deg δ 22.5 deg

Retained Soil

γ 120 pcf
ϕ 30 deg

Foundation Soil

γ 120 pcf
c' psf
ϕ 30 deg

(if specified)
bearing pressure n/a psf (net)

base embedment 9 in
base thickness 9 in
base material agg
toe slope H:1V slope

Aggregate Unit Fill

γ 100 pcf

composite friction coefficient μ_b 0.69

© STONE STRONG SYSTEMS

STONE STRONG SYSTEMS®

STONE STRONG GRAVITY CALCULATIONS - ver 5.7

Project Name: 24-86 Gravity Retaining Wall
Location:
Job#: 2017.478.001
Section:
Calc by: YL

Seismic Load PGA 0.00 G site class (A to E or 1) D Fpga 1.60 k_h 0.00

Backfill Slope & Surcharge

		rise in grade	LL surcharge	tier height
length 1	30 feet (horizontal)	ft	240 psf	ft
length 2	feet (horizontal)	ft	psf	ft
length 3	feet (horizontal)	ft	psf	ft
length 4	feet (horizontal)	ft	psf	

effective slope H:1V slope β 0.0 deg avg q 240 psf
failure plane α 58.61 deg zone of influence 15.40 ft

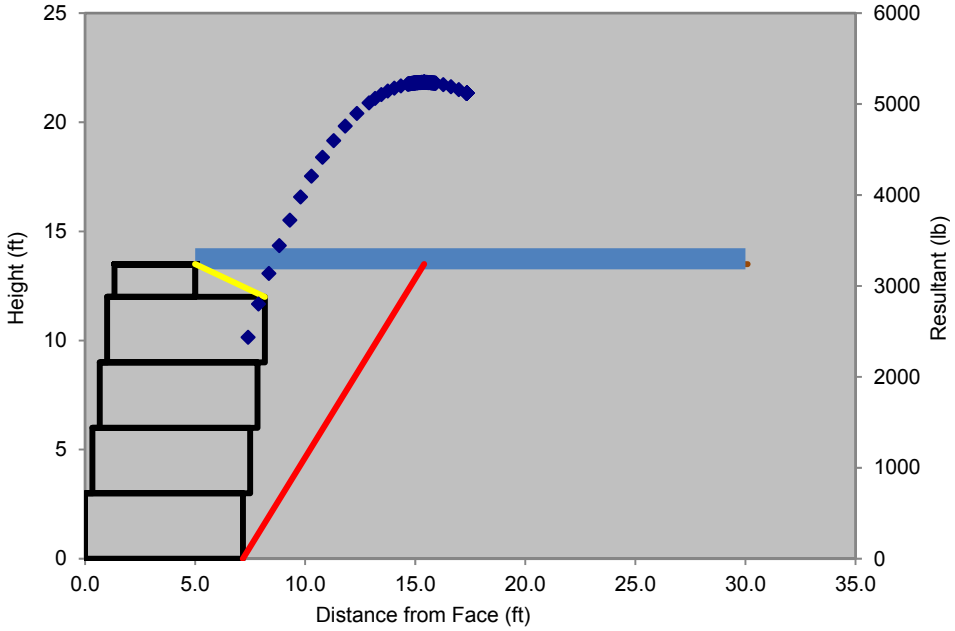

Ground Surface & Trial Wedge Plot

Unfactored Loads

K_a =	0.370	K_{AE} =	0.370
P_h =	3,441 lb	ΔK_{AE} =	0.000
P_v =	2,118 lb	P_{IR} =	0 lb
Q_{lh} =	1,020 lb	ΔP_{AEh} =	0 lb
Q_{lv} =	628 lb	ΔP_{AEv} =	0 lb

© STONE STRONG SYSTEMS

STONE STRONG SYSTEMS®

STONE STRONG GRAVITY CALCULATIONS - ver 5.7

Project Name: 24-86 Gravity Retaining Wall
Location:
Job#: 2017.478.001
Section:
Calc by: YL

	Load Cases:	Strngth I-a	Strngth I-b	Strngth IV	Extrme I-a (EQ)	Extrme I-b (EQ)	Extrme II (CT)	Service I	
Factored Loading	*Overturning (lb-ft):*	35,271	35,271	23,227	15,485	15,485	18,926	22,367	**OK!**
	Sliding (lb):	6,946	6,946	5,162	3,441	3,441	3,951	4,461	**OK!**
	Bearing (psf):	2,819	3,318	2,664	1,837	1,837	1,984	2,265	**OK!**
	e (ft):	1.47	1.03	0.51	0.45	0.45	0.67	0.84	**OK!**
	Bf' (ft):	5.36	6.16	7.13	7.24	7.24	6.85	6.51	
Factored Resistance	*Overturning (lb-ft):*	62,999	80,979	73,414	51,089	51,089	52,998	57,694	
	Sliding (lb):	7,460	10,171	9,352	7,289	7,289	7,470	8,159	
	Bearing (psf):	4,732	5,216	5,804	13,044	13,044	12,514	12,061	
	(@ top of base) Max e (ft):	2.39	2.39	2.39	2.87	2.87	2.87	2.39	
Load & Resistance Factors	LL	1.75	1.75	0.00	0.00	0.00	0.50	1.00	
	EH	1.50	1.50	1.50	1.00	1.00	1.00	1.00	
	EQ	0.00	0.00	0.00	1.00	1.00	0.00	0.00	
	CT	0.00	0.00	0.00	0.00	0.00	1.00	0.00	
	LL Surcharge over Wall	0.00	1.75	0.00	0.00	0.00	0.00	1.00	
	DC	0.90	1.25	1.50	1.00	1.00	1.00	1.00	
	EV	1.00	1.35	1.35	1.00	1.00	1.00	1.00	
	BC	0.45	0.45	0.45	1.00	1.00	1.00	1.00	
	ϕt precast to agg	0.90	0.90	0.90	1.00	1.00	1.00	1.00	
	ϕt CIP to agg/soil	0.80	0.80	0.80	1.00	1.00	1.00	1.00	
	ϕt soil to soil	0.90	0.90	0.90	1.00	1.00	1.00	1.00	
	ϕt precast to precast	0.90	0.90	0.90	1.00	1.00	1.00	1.00	
	concrete interface - eccentricity limit	0.45	0.45	0.45	0.40	0.40	0.45	0.45	
	bearing on soil - eccentricity limit	0.33	0.33	0.33	0.40	0.40	0.40	0.33	

© S T O N E S T R O N G S Y S T E M S

DELTA
SPECIALTY PRECAST CONCRETE ENGINEERS
860 Hooper Road, Endwell, NY 13760
www.delta-eas.com
Phone: (607) 231-6600
Fax: (607) 231-6650

JOB	2017.478.001		
DESCRIPTION	Gravity Wall - 24-86 Blocks		
SHEET NO	OF	SCALE	
CALCULATED BY	YL	DATE	6/8/2017
CHECKED BY		DATE	

Load Calculations - 24-86 Blocks - 15' Wall Height

Internal Pressure from Infill

Infill Density =	100	pcf
ko =	0.5	
Height to Middle of Bottom Block =	13.5	ft
Internal Pressure (at rest) =	675	psf

External Pressure from Retained Soil

Soil Density =	120	pcf
ka =	0.33	
Height to Middle of Bottom Block =	13.5	ft
External Pressure (at rest) =	535	psf
Live Load Surcharge =	80	psf

Item 5.

DELTA
SPECIALTY PRECAST CONCRETE ENGINEERS
860 Hooper Road, Endwell, NY 13760
www.delta-eas.com
Phone: (607) 231-6600
Fax: (607) 231-6650

JOB 2017.478.001
DESCRIPTION Gravity Wall - 24-86 Blocks
SHEET NO. ____ OF ____ SCALE ____
CALCULATED BY YL DATE 6/8/2017
CHECKED BY ____ DATE ____

Risa Results - 24-86 Blocks - 15' Wall Height

fc' = 5000 psi
5*√f'c = 354 psi

Front Face:

-Mu =	1.17	k-ft/ft
Thickness t =	8	in
S = 12 t²/6=	128	in³
ϕMn =0.6* 5*√f'c S =	2.26	k-ft/ft OK
+Mu =	0.63	k-ft/ft
Thickness t =	6	in
S = 12 t²/6=	72	in³
ϕMn =0.6* 5*√f'c S =	1.27	k-ft/ft OK
Vu =	3.15	k/ft
Thickness t =	8	in
ϕVn =0.6* 4/3*√f'c *12 t =	5.43	k-ft/ft OK

Front Face Reinforcing required for temperature and shrinkage only.

Rear Face:

Bending moment and shear are negaligle due to balancing of infill pressure and retained soil pressure.

Rear Face Reinforcing required for temperature and shrinkage only.

Web

Tu =	8.10	k/ft
Thickness t =	6	in
ϕTn =0.6*5*√f'c *12 t =	15.27	k-ft/ft OK

Web Reinforcing required for temperature and shrinkage only.

DELTA
SPECIALTY PRECAST CONCRETE ENGINEERS
860 Hooper Road, Endwell, NY 13760
www.delta-eas.com
Phone: (607) 231-6600
Fax: (607) 231-6650

JOB	2017.478.001		
DESCRIPTION	Stonestrong Retaining Wall		
SHEET NO		OF	SCALE
CALCULATED BY	YL	DATE	6/8/2017
CHECKED BY		DATE	

Temperature and Shrinkage Reinforcing (AASHTO LRFD 5.10.8)

$$As = \frac{1.30\,bh}{2(b + h)Fy}$$

0.11<= As <= 0.6

fy = 60 ksi

b =	36	in	Least Width of Component Section
h =	6	in	Least Thickness of Component Section

As = 0.11 in^2/ft

Provide W8xW8 - 6x6 Wire Mesh in Front Face & Webs. Bend Web Mesh into Front Face to Form a Standard Hook.

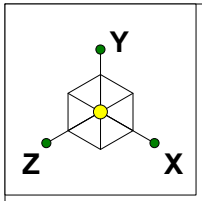

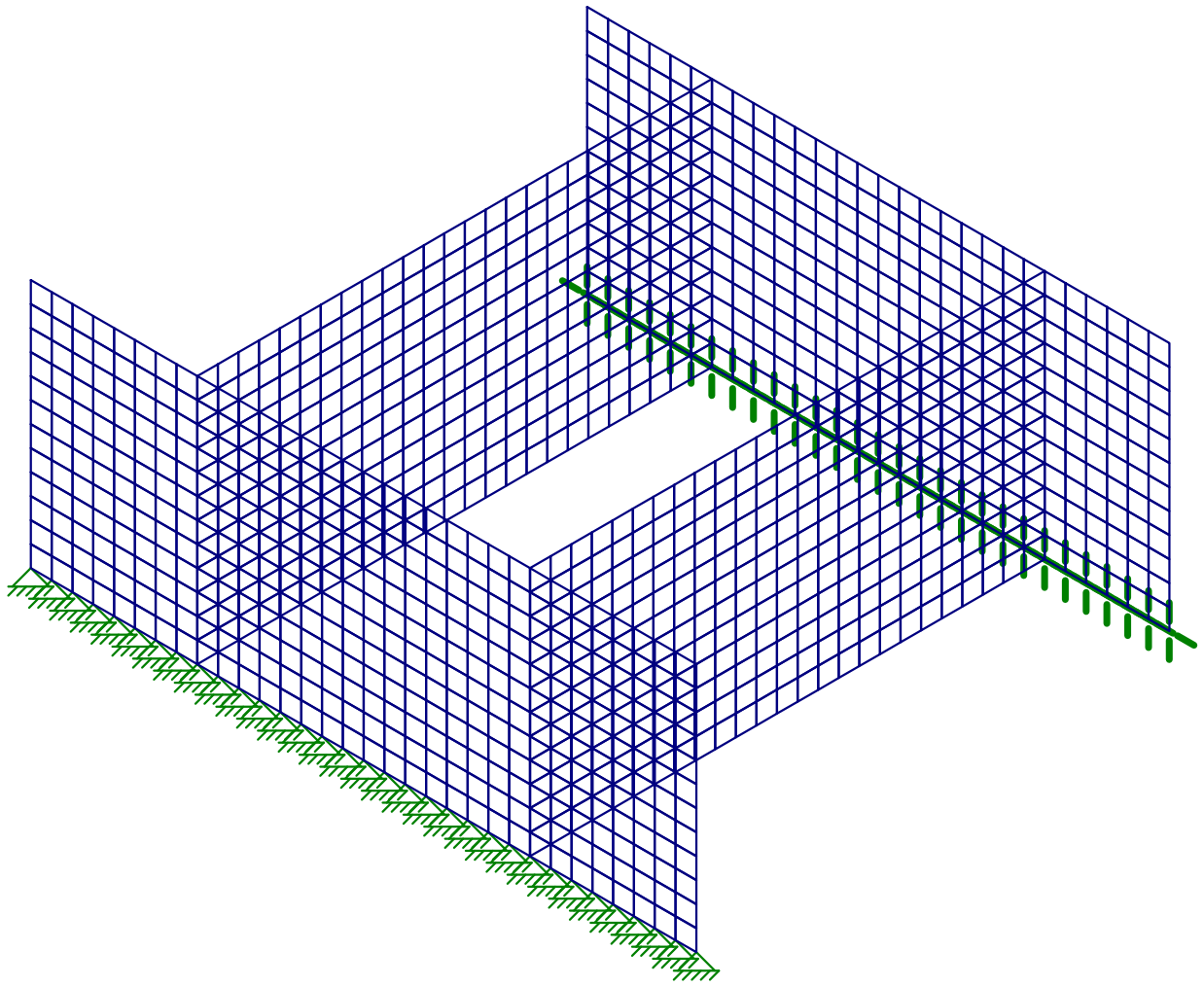

Delta Engineers,Inc	Gravity Wall - 24-86 Blocks	SK - 1
YL		June 15, 2017 at 2:25 PM
2017.478.001		24-86 Block.r3d

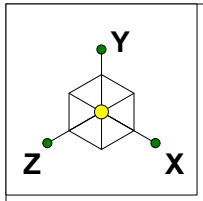

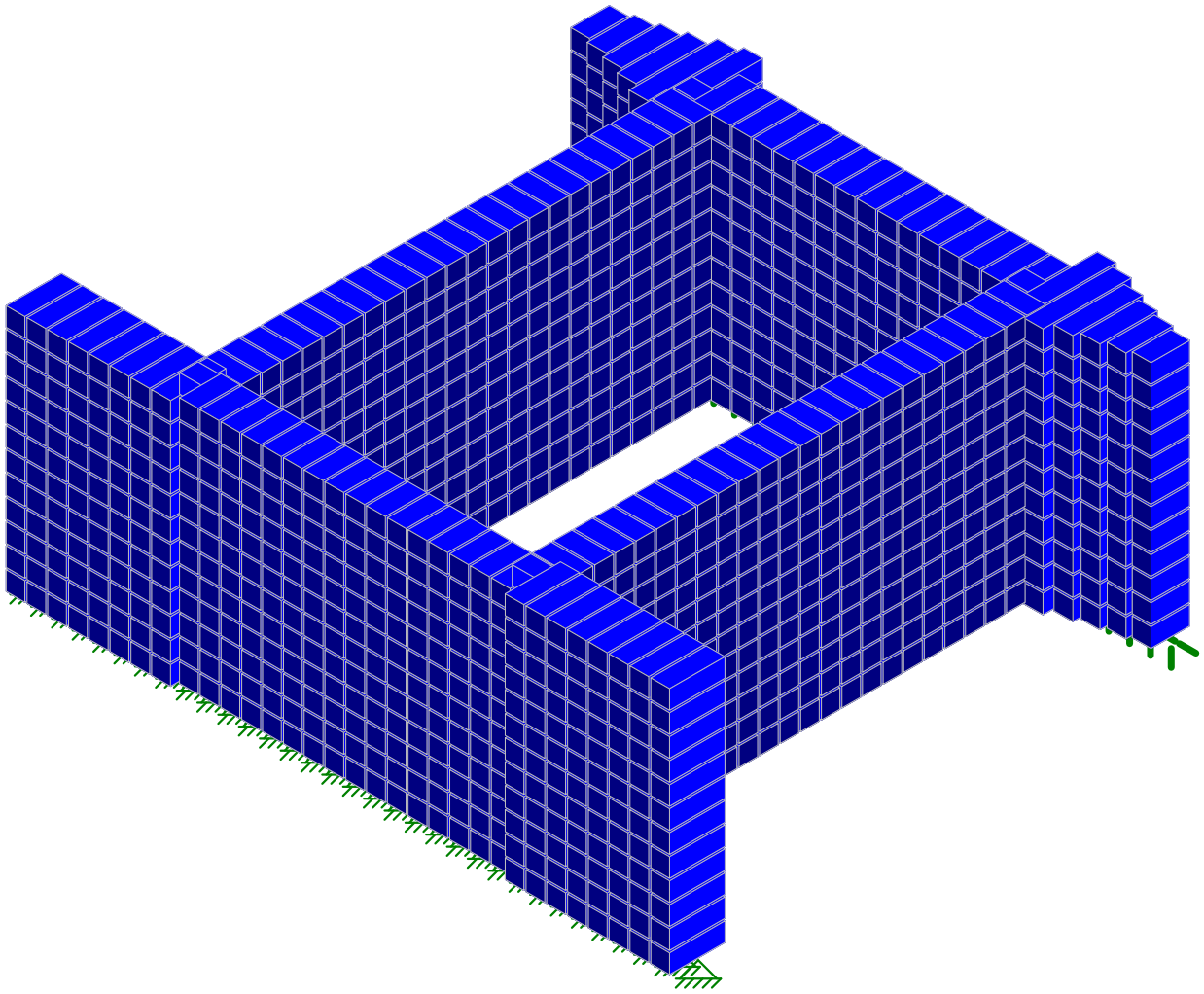

Delta Engineers,Inc	Gravity Wall - 24-86 Blocks	SK - 2
YL		June 15, 2017 at 2:26 PM
2017.478.001		24-86 Block.r3d

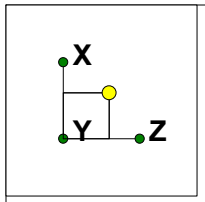

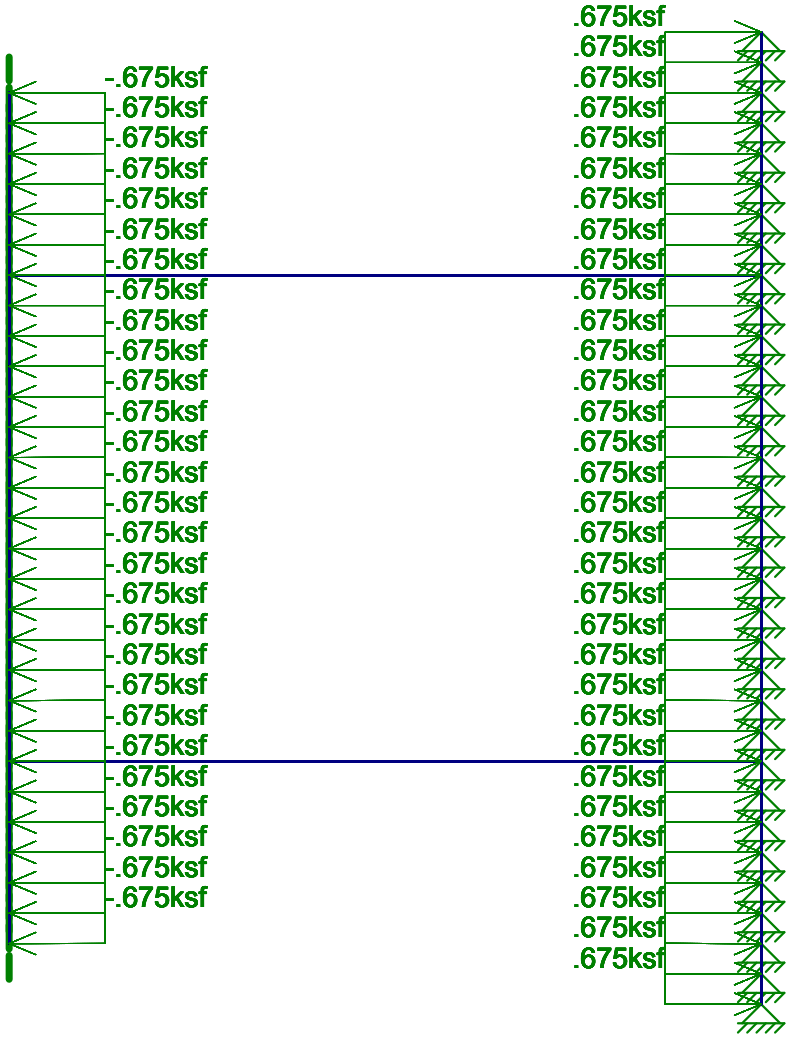
-.675ksf
-.675ksf
-.675ksf
-.675ksf
-.675ksf
-.675ksf
-.675ksf
-.675ksf
-.675ksf
-.675ksf
-.675ksf
-.675ksf
-.675ksf
-.675ksf
-.675ksf
-.675ksf
-.675ksf
-.675ksf
-.675ksf
-.675ksf
-.675ksf
-.675ksf
-.675ksf
-.675ksf
-.675ksf
.675ksf
.675ksf

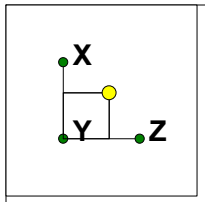

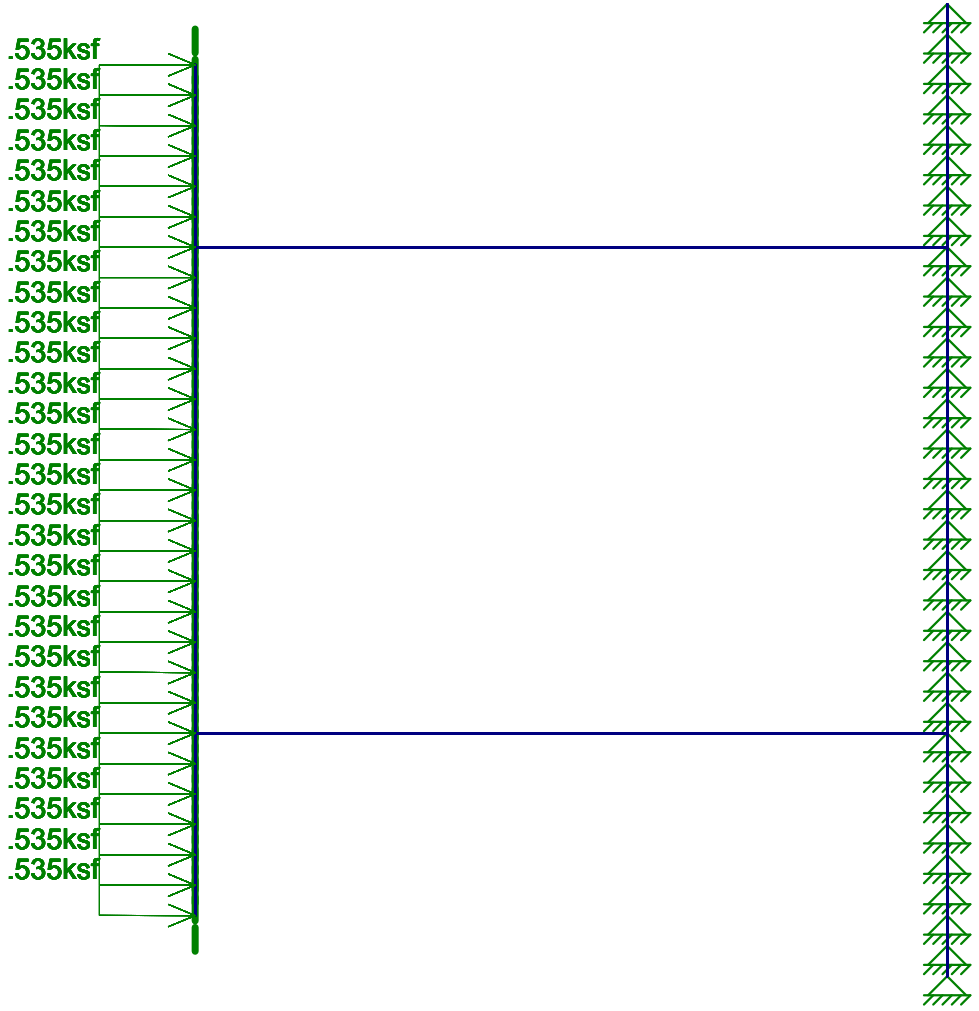

External Pressure

Loads: BLC 2, EH-active

Delta Engineers,Inc	Gravity Wall - 24-86 Blocks	SK - 4
YL		June 15, 2017 at 2:27 PM
2017.478.001		24-86 Block.r3d

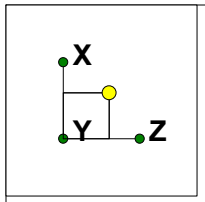

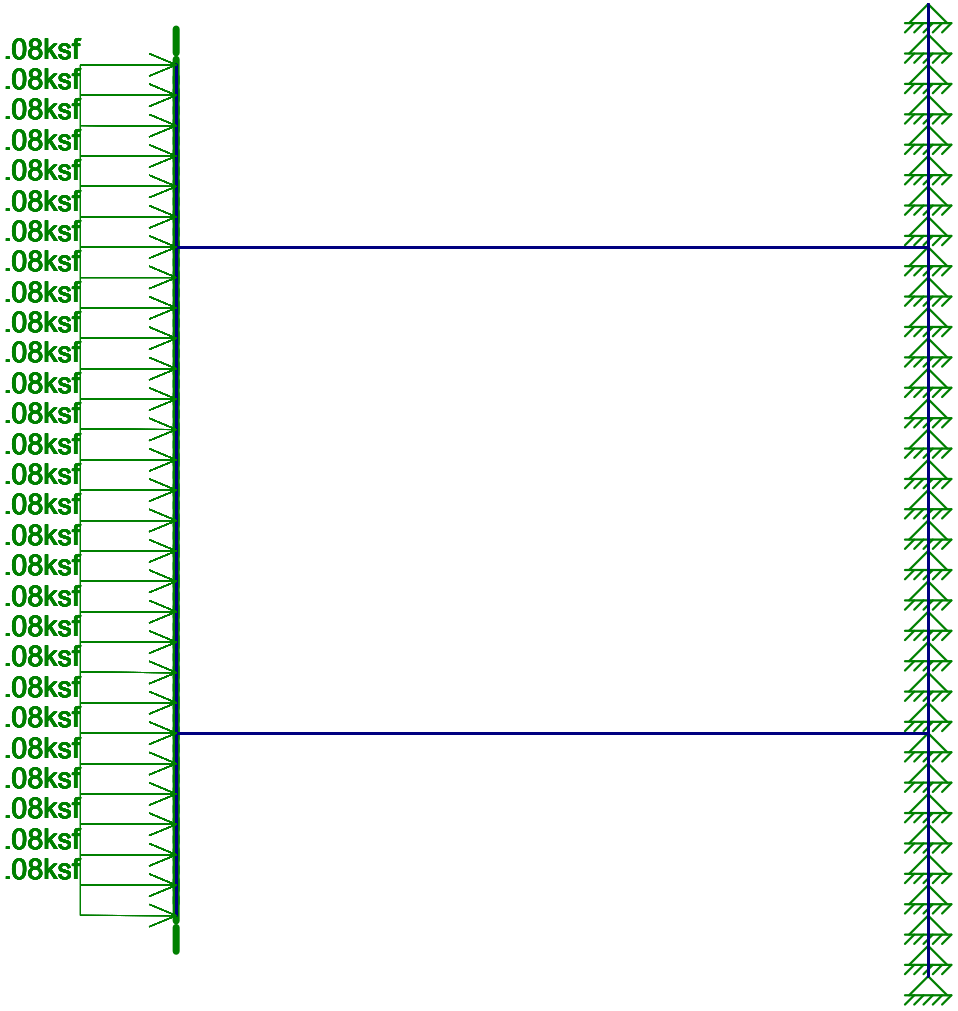

Surcharge

Loads: BLC 3, LS

Delta Engineers,Inc	Gravity Wall - 24-86 Blocks	SK - 5
YL		June 15, 2017 at 2:27 PM
2017.478.001		24-86 Block.r3d

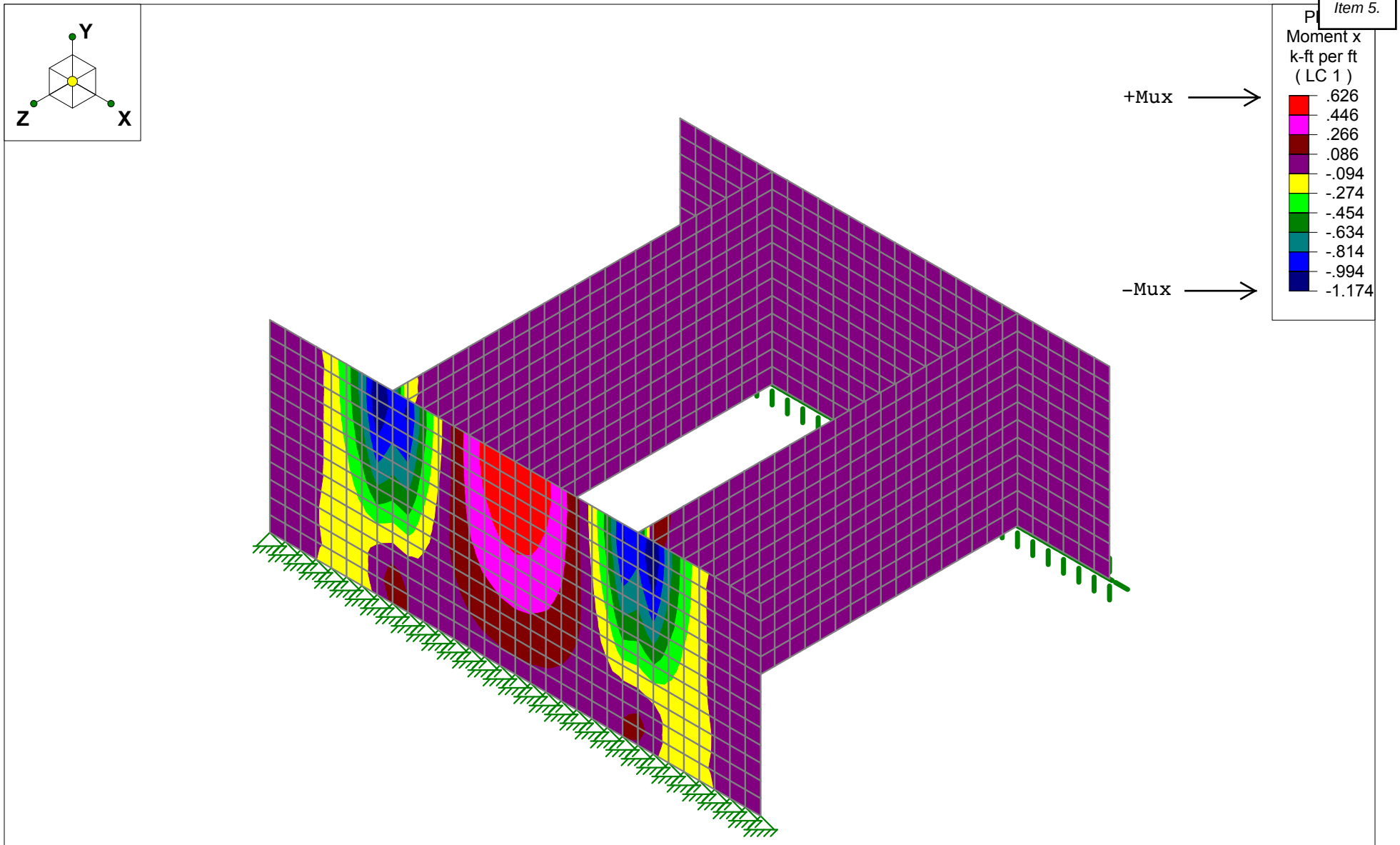

Results for LC 1, 1.35EH-at rest +1.5EH - active + 1.75LS

Delta Engineers,Inc	Gravity Wall - 24-86 Blocks	SK - 6
YL		June 15, 2017 at 2:28 PM
2017.478.001		24-86 Block.r3d

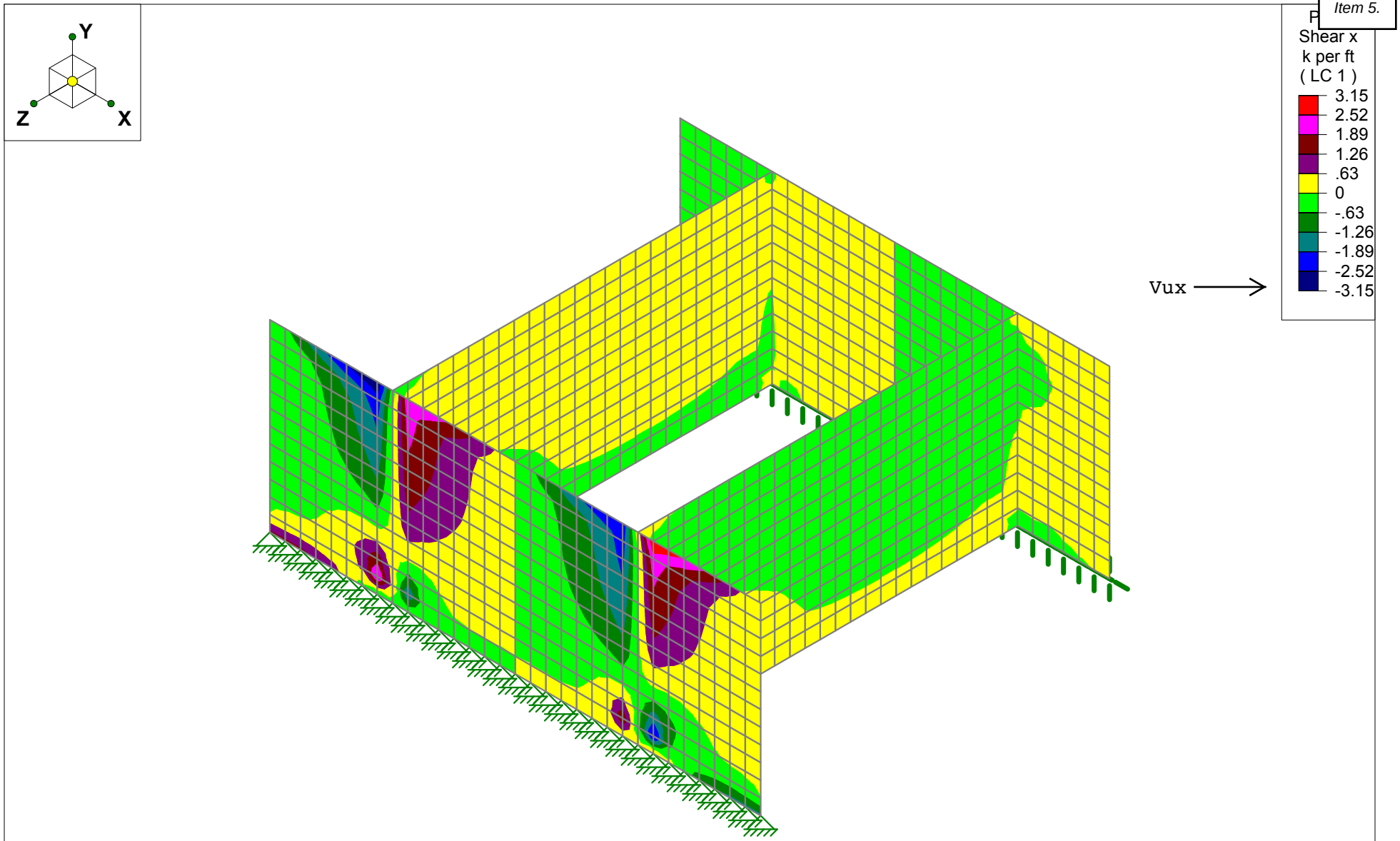

Results for LC 1, 1.35EH-at rest +1.5EH - active + 1.75LS

Delta Engineers,Inc	Gravity Wall - 24-86 Blocks	SK - 8
YL		June 15, 2017 at 2:29 PM
2017.478.001		24-86 Block.r3d

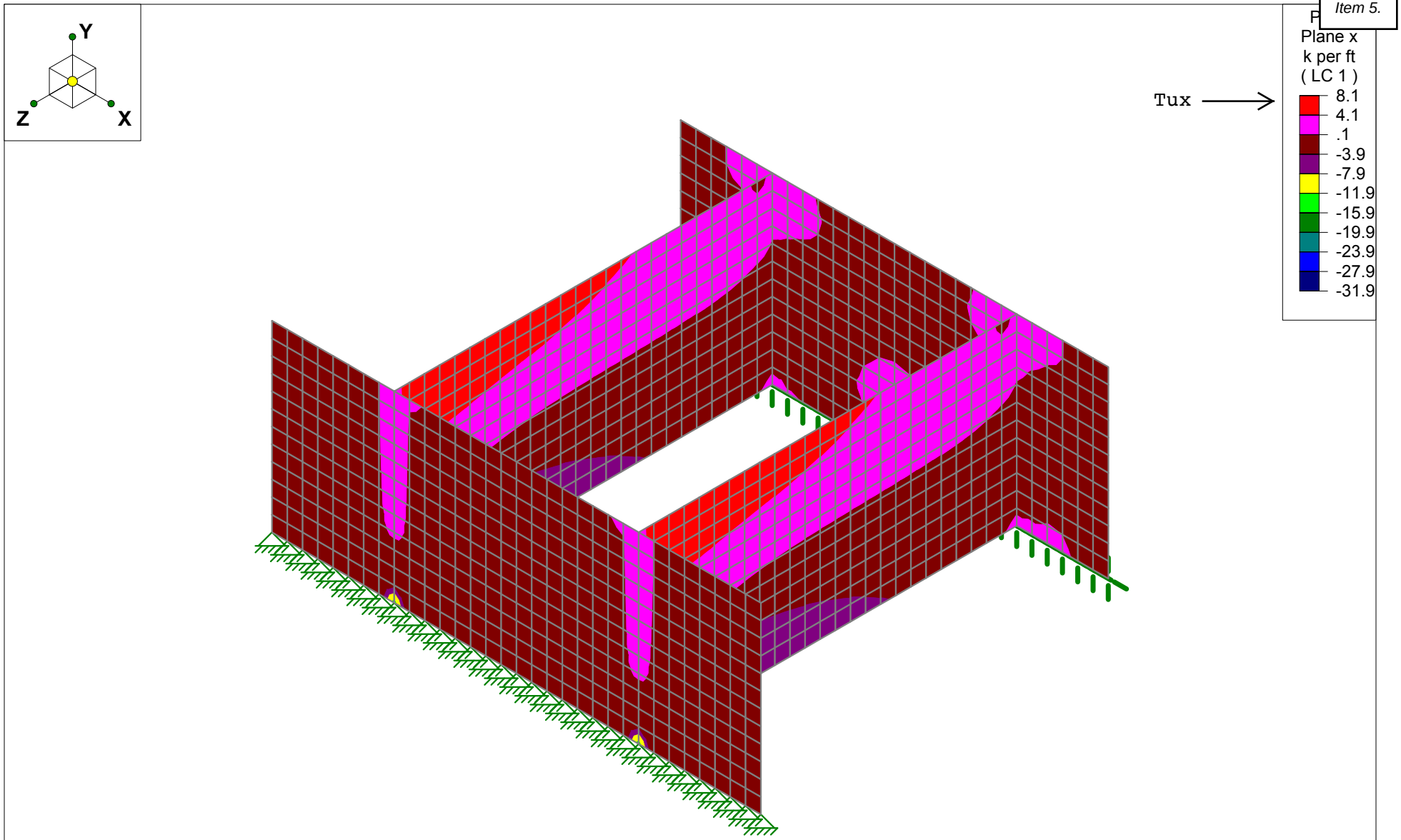

Results for LC 1, 1.35EH-at rest +1.5EH - active + 1.75LS

Delta Engineers,Inc	Gravity Wall - 24-86 Blocks	SK - 9
YL		June 15, 2017 at 2:33 PM
2017.478.001		24-86 Block.r3d

Company : Delta Engineers,Inc
Designer : YL
Job Number : 2017.478.001
Model Name : Gravity Wall - 24-86 Blocks

June 15, 2017
2:30 PM
Checked By:_____

Basic Load Cases

	BLC Description	Category	X Gravity	Y Gravity	Z Gravity	Joint	Point	Distributed	Area(Me...	Surface(...
1	EH-rest	None								720
2	EH-active	None								336
3	LS	None								336

Load Combinations

	Description	S...	P...	S...	B...	Factor	B...	Fa...	B...	Fa...	B...	Fa...	B...	Fa...	B...	Fa...	B...	Fa...	B...	Fa...	B...	Fa...	B...	Fa...	B...	Fa...
1	1.35EH-at rest +1.5EH - active + ...	Yes			1	1.35	2	1.5	3	1.75																
2	EH-at rest +EH - active +LS	Yes			1	1	2	1	3	1																

DELTA
SPECIALTY PRECAST CONCRETE ENGINEERS
860 Hooper Road, Endwell, NY 13760
www.delta-eas.com
Phone: (607) 231-6600
Fax: (607) 231-6650

JOB	2017.478.001		
DESCRIPTION	Reinforced Wall - 24SF		
SHEET NO		OF	SCALE
CALCULATED BY	YL	DATE	6/8/2017
CHECKED BY		DATE	

Reinforce Wall - Maximum 36.5ft Wall Height
24SF Blocks

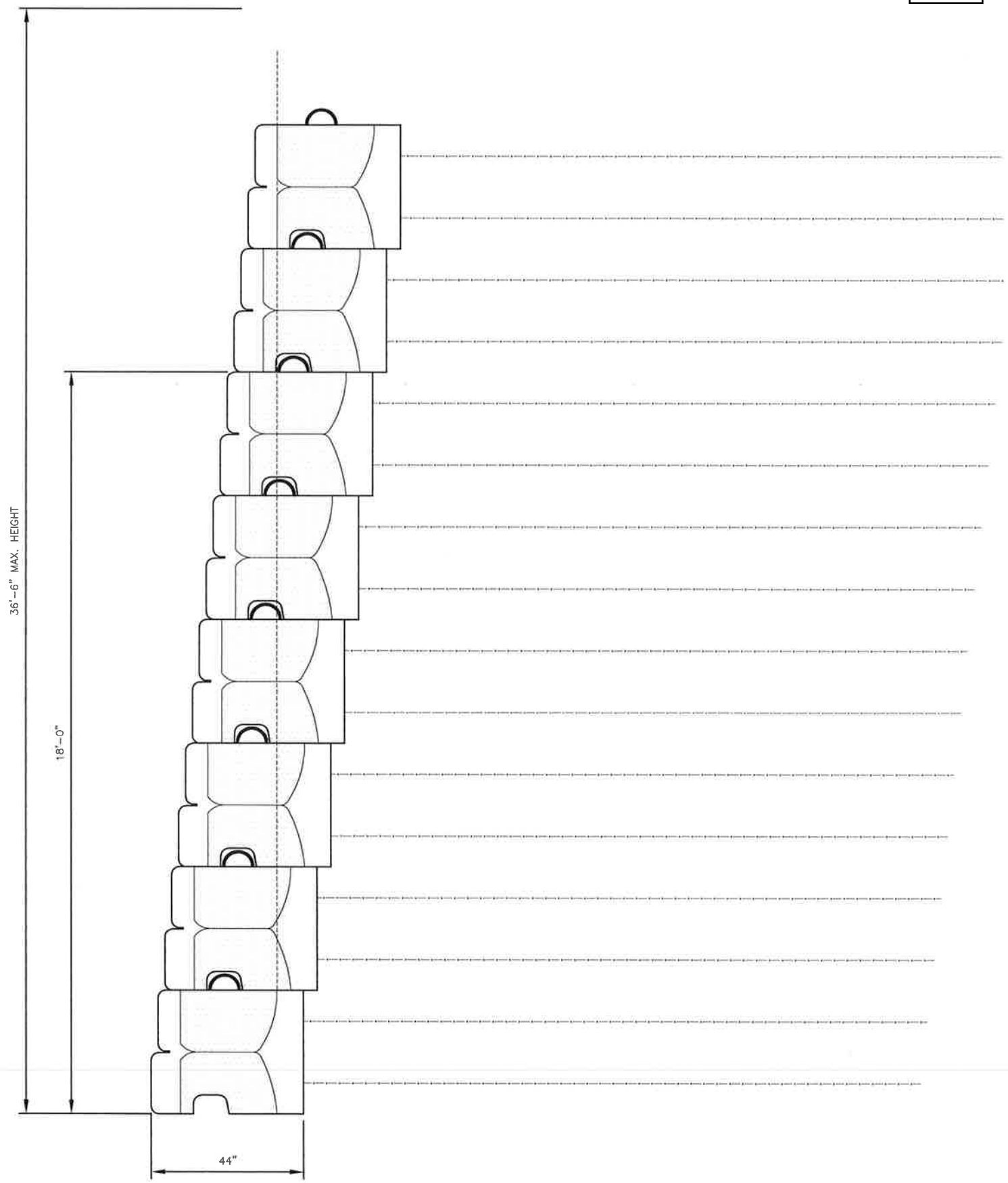

REINFORCED WALL
24 SF UNIT

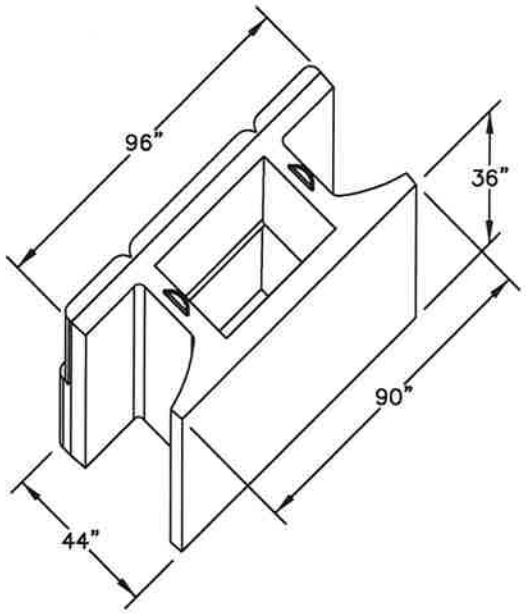

REAR VIEW
STONE STRONG 24SF UNIT

NOT TO SCALE

DISCLAIMER:

These typical details are preliminary and conceptual in nature. They are provided for general information purposes only. Anyone making use of these details and related information does so at their own risk and assumes all liability for such use. Site specific design should be performed by a licensed Professional Engineer based on actual site conditions, materials, and local practices.

Stone Strong LLC retains al common law, statutory, and other reserved rights to these drawings including the copyright. Limited license is granted to copy, reproduce, or modify the details to prepare construction drawings for Stone Strong retaining walls. Stone Strong LLC makes no warranties, either expressed or implied, of merchantability or fitness for any particular purpose, and accepts no responsibility for the accuracy, suitability, or completeness of information contained herein.

STONE STRONG SYSTEMS

www.stonestrong.com

PROJECT

COMPONENTS
STONE STRONG SYSTEMS

DATE: 2/10/16 | FILE: 05_Block.24sf.Rear

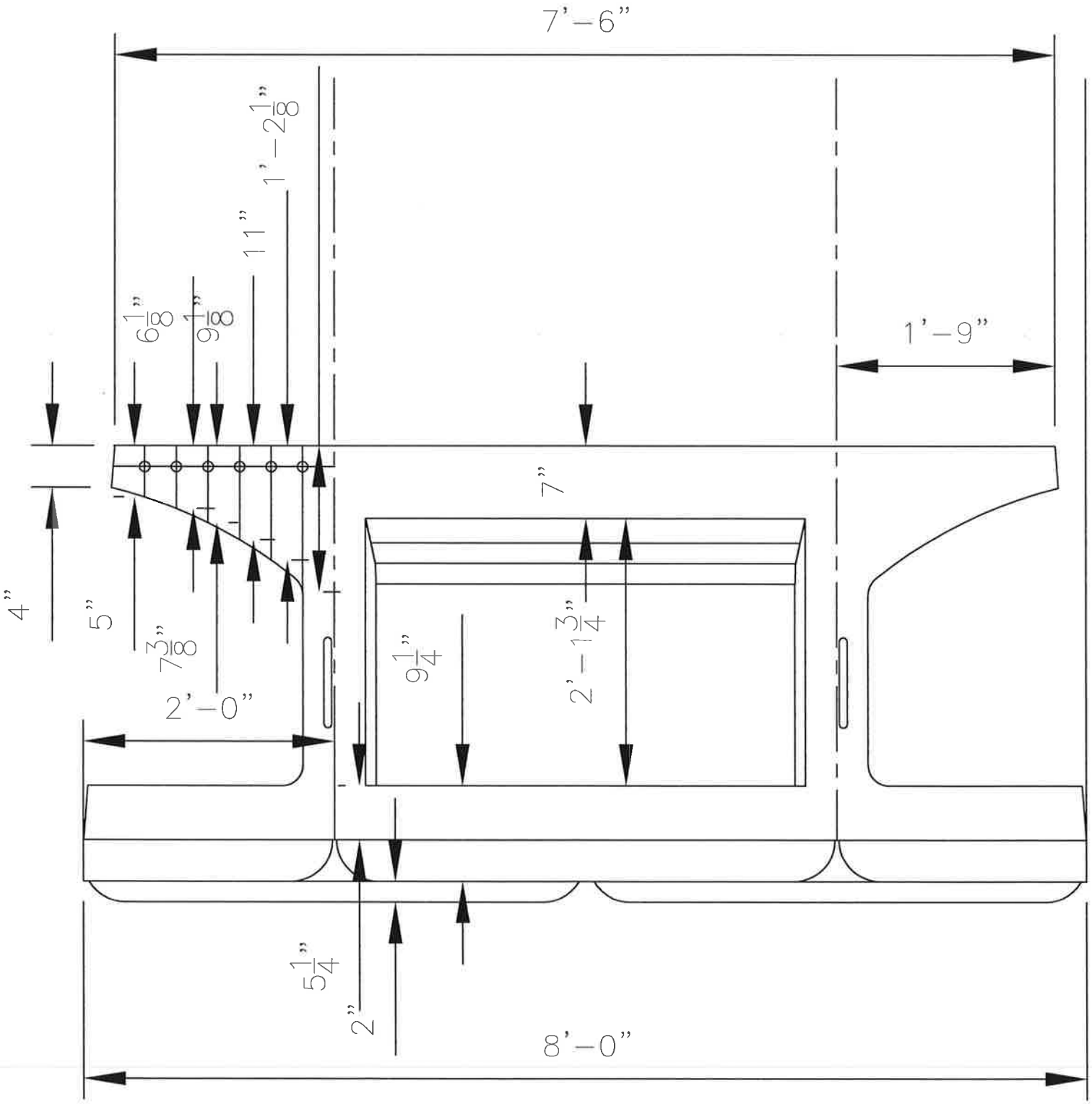

24 SF UNIT

DELTA
SPECIALTY PRECAST CONCRETE ENGINEERS
860 Hooper Road, Endwell, NY 13760
www.delta-eas.com
Phone: (607) 231-6600
Fax: (607) 231-6650

JOB	2017.478.001		
DESCRIPTION	Reinforced Wall - 24SF		
SHEET NO.	OF	SCALE	
CALCULATED BY	YL	DATE	6/8/2017
CHECKED BY		DATE	

Load Calculations - 24 SF Blocks - 36.5' Wall Height

Internal Pressure from Infill

Infill Density =	100	pcf
ko =	0.5	
Height to Middle of Bottom Block =	16.5	ft
Internal Pressure (at rest) =	825	psf

External Pressure from Retained Soil

Soil Density =	120	pcf
ka =	0.33	
Height to Middle of Bottom Block =	35	ft
External Pressure (at rest) =	1386	psf
Live Load Surcharge =	0	psf

Item 5.

DELTA
SPECIALTY PRECAST CONCRETE ENGINEERS
860 Hooper Road, Endwell, NY 13760
www.delta-eas.com
Phone: (607) 231-6600
Fax: (607) 231-6650

JOB	2017.478.001		
DESCRIPTION	Reinforced Wall - 24SF		
SHEET NO	OF	SCALE	
CALCULATED BY	YL	DATE	6/8/2017
CHECKED BY		DATE	

Risa Results - 24SF - 36.5' Wall Height

fc' = 5000 psi
5*√f'c = 354 psi

Front Face:

-Mu =	1.99	k-ft/ft	
Thickness t =	8	in	
S = 12 t^2/6=	128	in^3	
ϕMn =0.6* 5*√f'c S =	2.26	k-ft/ft	OK
+Mu =	0.53	k-ft/ft	
Thickness t =	6	in	
S = 12 t^2/6=	72	in^3	
ϕMn =0.6* 5*√f'c S =	1.27	k-ft/ft	OK
Vu =	2.20	k/ft	
Thickness t =	8	in	
ϕVn =0.6* 4/3*√f'c *12 t =	5.43	k-ft/ft	OK

Front Face Reinforcing required for temperature and shrinkage only.

Rear Face:

-Mu =	1.55	k-ft/ft	
Thickness t =	8	in	
S = 12 t^2/6=	128	in^3	
ϕMn =0.6* 5*√f'c S =	2.26	k-ft/ft	OK
+Mu =	0.66	k-ft/ft	
Thickness t =	7	in	
S = 12 t^2/6=	98	in^3	
ϕMn =0.6* 5*√f'c S =	1.73	k-ft/ft	OK
Vu =	6.52	k/ft	
Thickness t =	14.13	in	
ϕVn =0.6* 4/3*√f'c *12 t =	9.59	k-ft/ft	OK

Rear Face Reinforcing required for temperature and shrinkage only.

DELTA
SPECIALTY PRECAST CONCRETE ENGINEERS
860 Hooper Road, Endwell, NY 13760
www.delta-eas.com
Phone: (607) 231-6600
Fax: (607) 231-6650

JOB	2017.478.001			
DESCRIPTION	Reinforced Wall - 24SF			
SHEET NO		OF	SCALE	
CALCULATED BY	YL		DATE	6/8/2017
CHECKED BY			DATE	

Risa Results - 24SF - 36.5' Wall Height

Web

fc' = 5000 psi

5*√f'c = 354 psi

Tu =	9.81	k/ft	
Thickness t =	6	in	
ϕTn =0.6*5*√f'c *12 t =	15.27	k-ft/ft	OK

Web Reinforcing required for temperature and shrinkage only.

DELTA
SPECIALTY PRECAST CONCRETE ENGINEERS
860 Hooper Road, Endwell, NY 13760
www.delta-eas.com
Phone: (607) 231-6600
Fax: (607) 231-6650

JOB	2017.478.001		
DESCRIPTION	Stonestrong Retaining Wall		
SHEET NO	OF	SCALE	
CALCULATED BY	YL	DATE	6/8/2017
CHECKED BY		DATE	

Temperature and Shrinkage Reinforcing (AASHTO LRFD 5.10.8)

$$As = \frac{1.30\,bh}{2(b+h)Fy}$$

0.11<= As <= 0.6

fy = 60 ksi

b = 36 in Least Width of Component Section

h = 6 in Least Thickness of Component Section

As = 0.11 in^2/ft

Provide W8xW8 - 6x6 Wire Mesh in Front Face & Webs. Bend Web Mesh into Front Face to Form a Standard Hook.

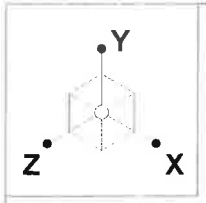

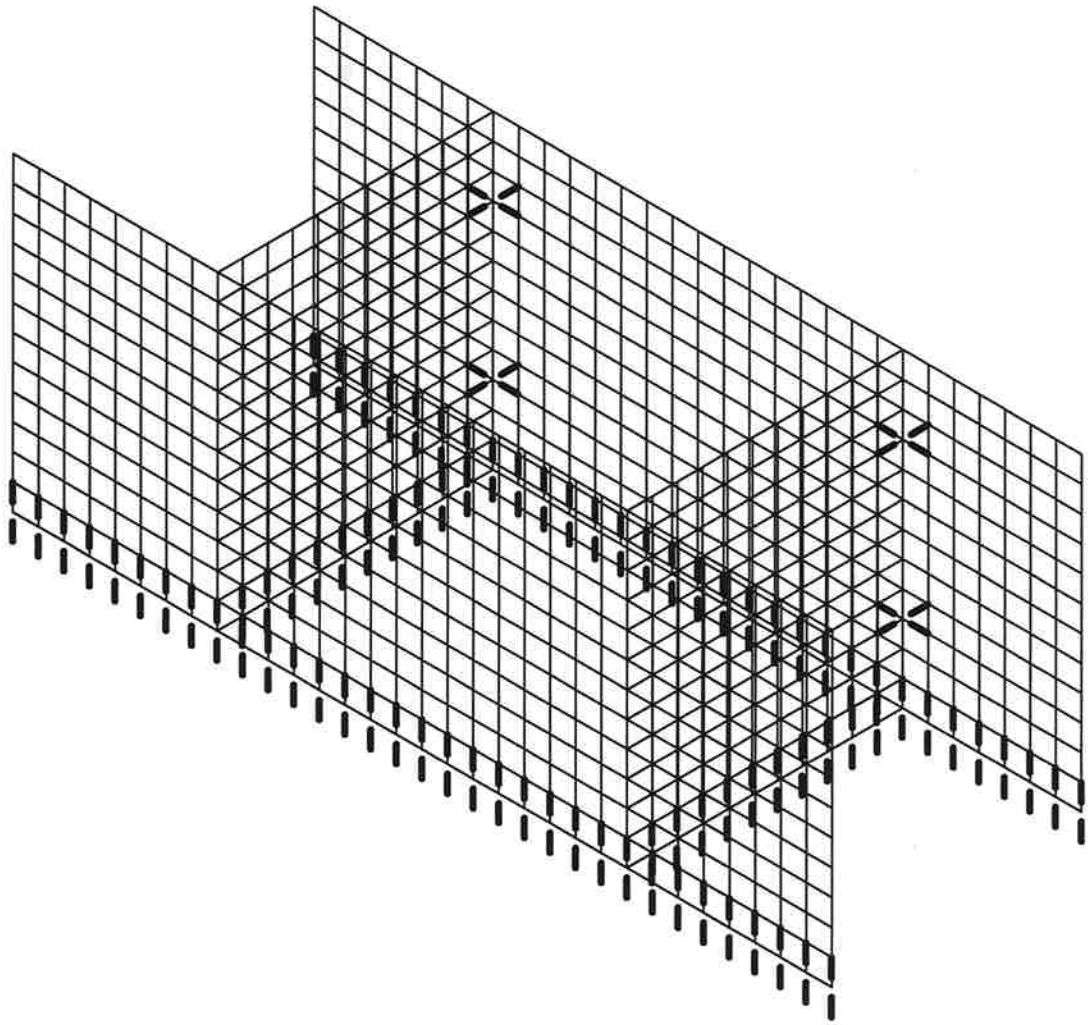

Delta Engineers,Inc	Reinforced Wall - 24 SF Blocks	SK - 1
YL		June 8, 2017 at 4:02 PM
2017.478.001		24 SF Block.r3d

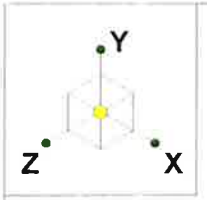

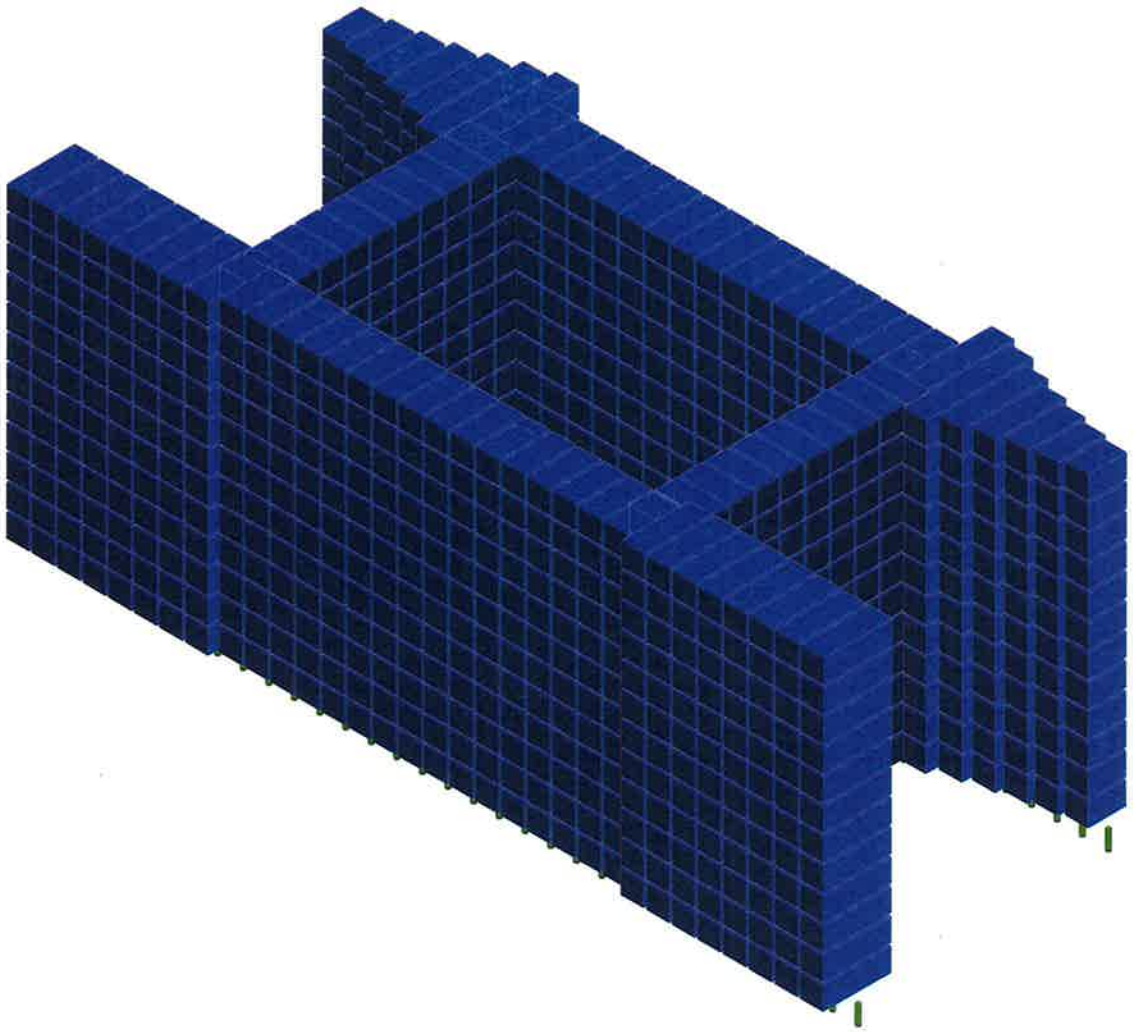

Delta Engineers,Inc	Reinforced Wall - 24 SF Blocks	SK - 2
YL		June 8, 2017 at 4:17 PM
2017.478.001		24 SF Block.r3d

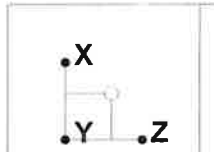

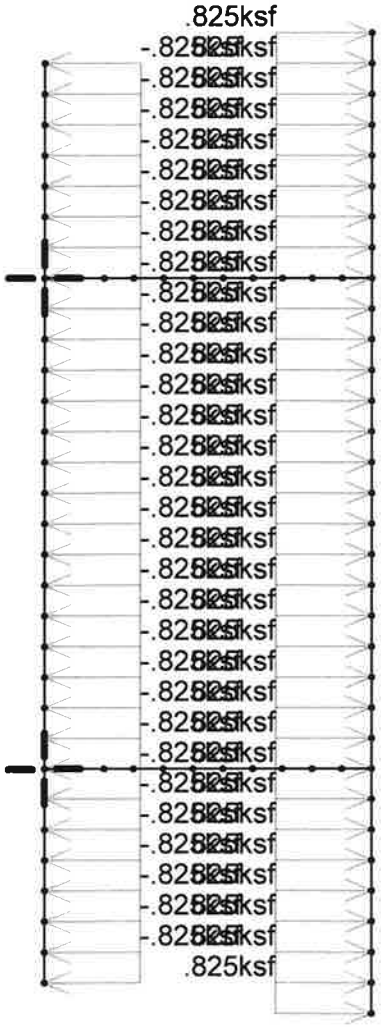

Internal Pressure

Loads: BLC 1, EH-rest

Delta Engineers,Inc	Reinforced Wall - 24 SF Blocks	SK - 3
YL		June 8, 2017 at 4:19 PM
2017.478.001		24 SF Block.r3d

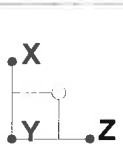

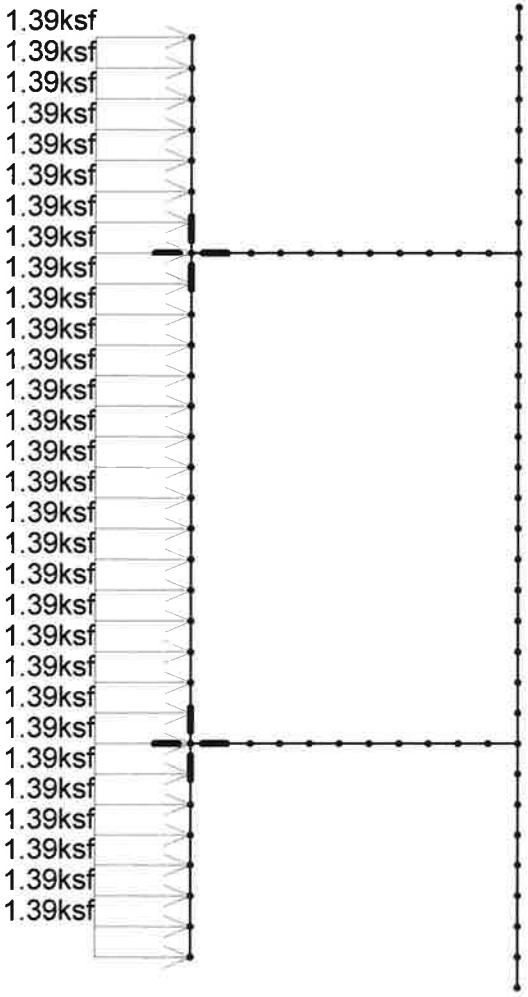

External Pressure

Loads: BLC 2, EH-active

Delta Engineers,Inc	Reinforced Wall - 24 SF Blocks	SK - 4
YL		June 8, 2017 at 4:20 PM
2017.478.001		24 SF Block.r3d

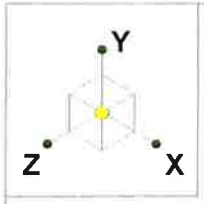

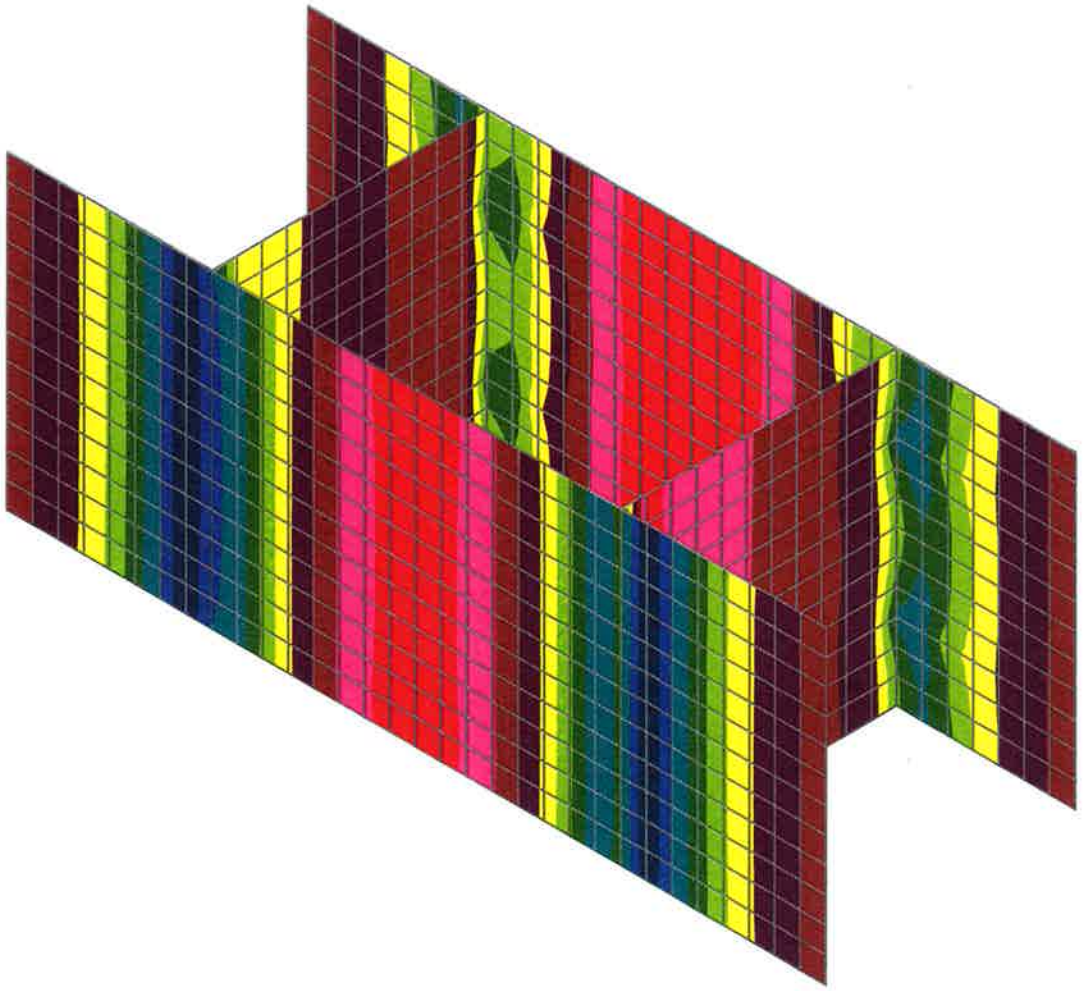

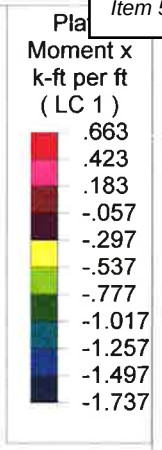

Results for LC 1, 1.35EH-at rest +1.5EH - active + 1.75LS

Delta Engineers,Inc	Reinforced Wall - 24 SF Blocks	SK - 5
YL		June 8, 2017 at 4:21 PM
2017.478.001		24 SF Block.r3d

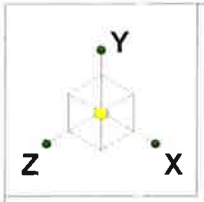

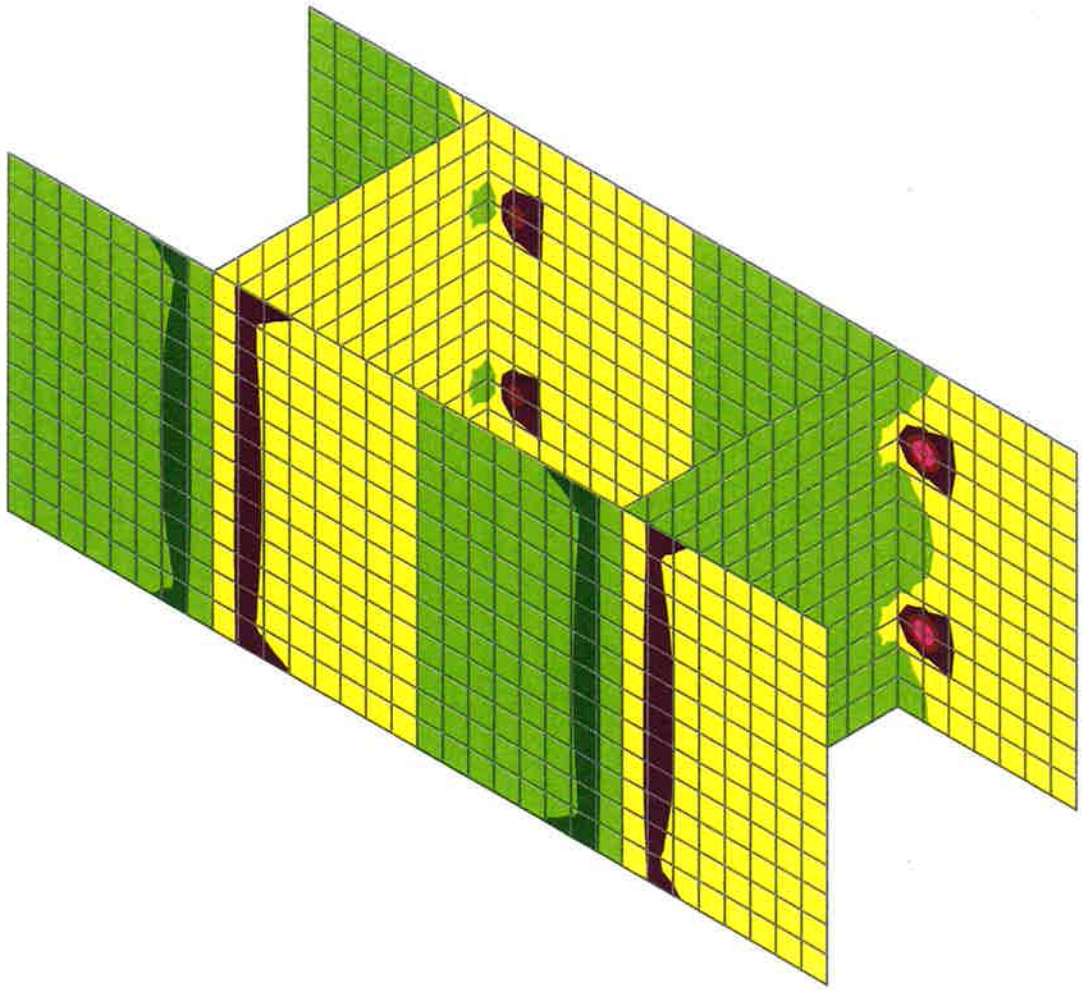

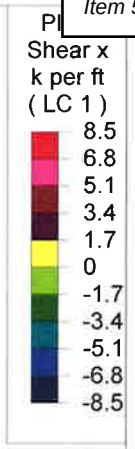

Results for LC 1, 1.35EH-at rest +1.5EH - active + 1.75LS

Delta Engineers,Inc	Reinforced Wall - 24 SF Blocks	SK - 6
YL		June 8, 2017 at 4:21 PM
2017.478.001		24 SF Block.r3d

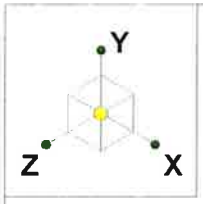

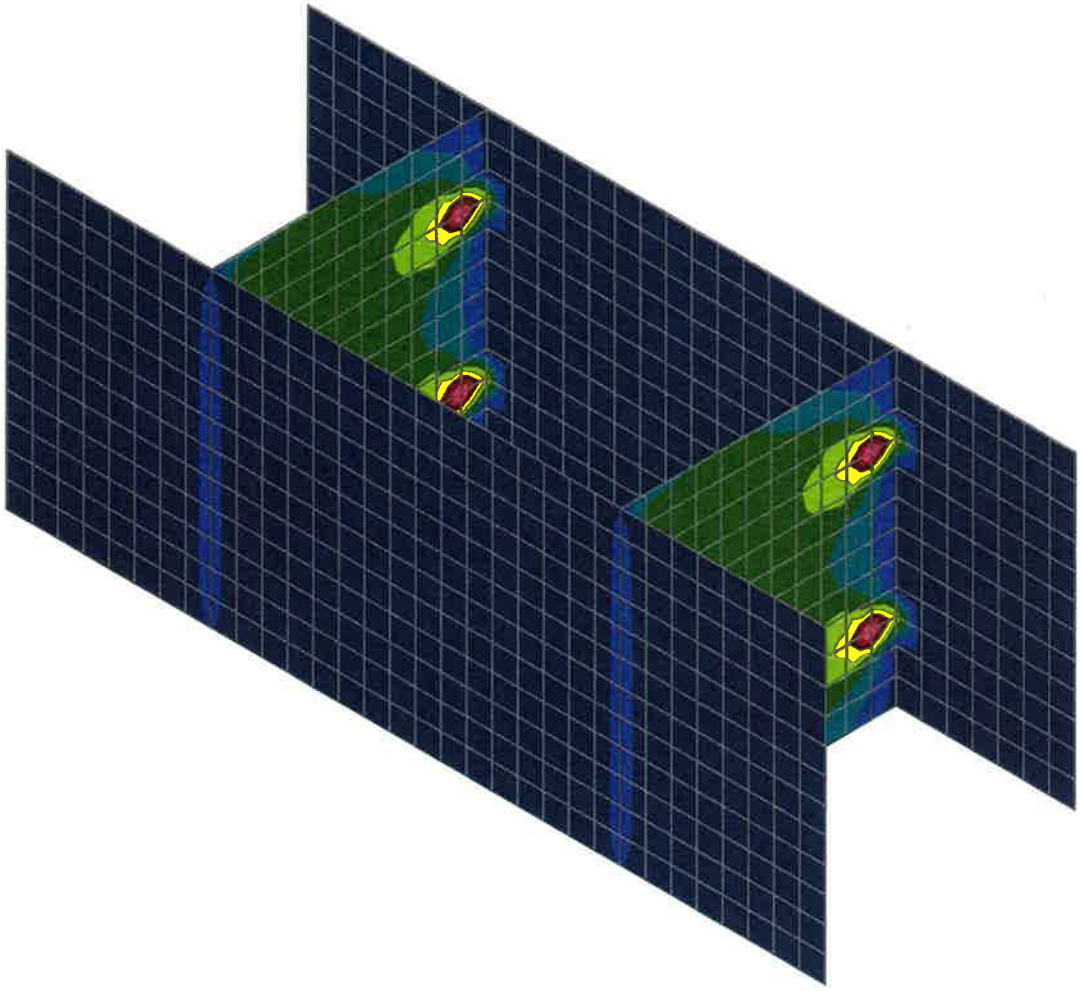

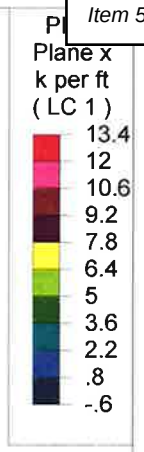

Results for LC 1, 1.35EH-at rest +1.5EH - active + 1.75LS

Delta Engineers,Inc	Reinforced Wall - 24 SF Blocks	SK - 7
YL		June 8, 2017 at 4:22 PM
2017.478.001		24 SF Block.r3d

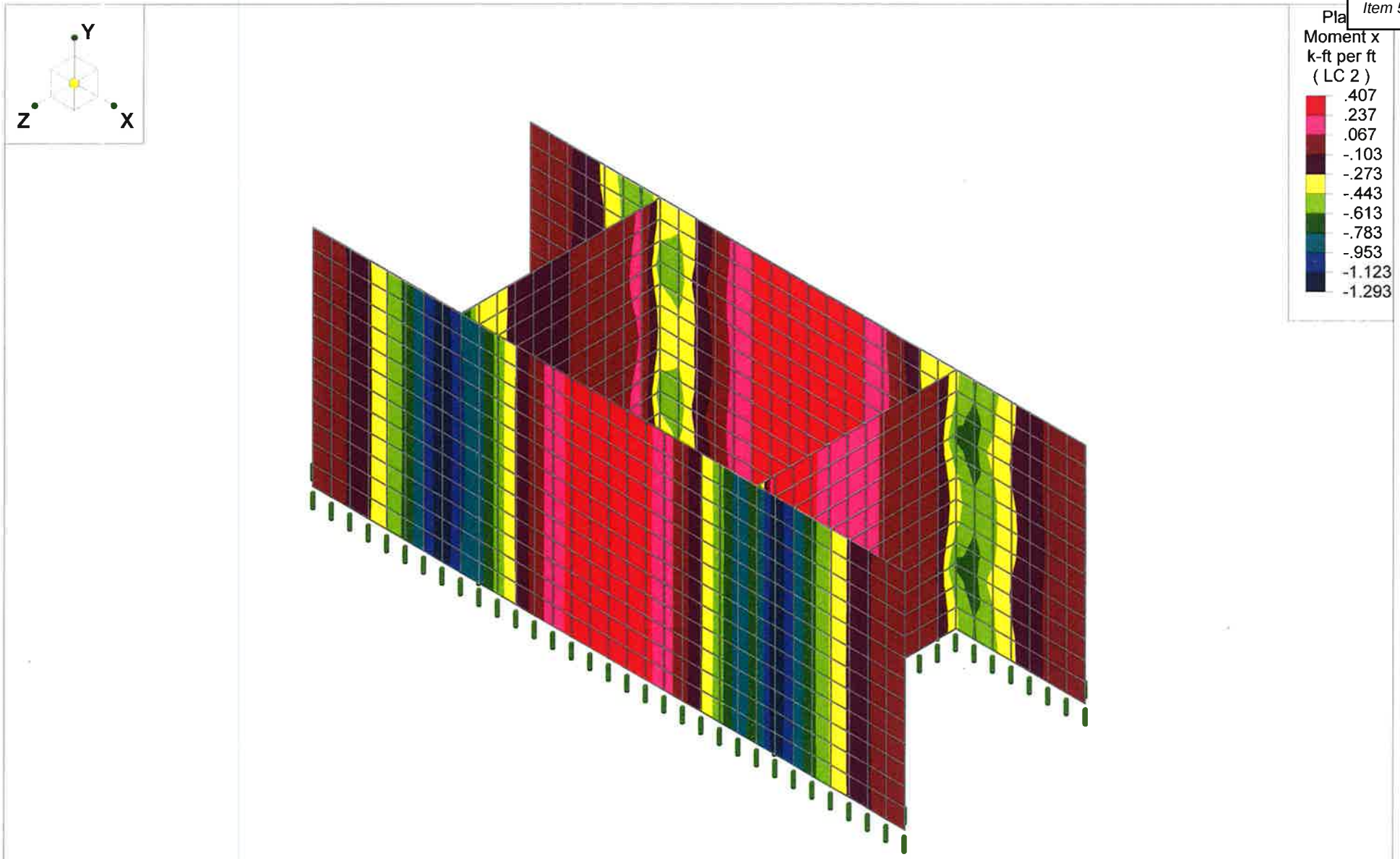

Results for LC 2, EH-at rest +EH - active +LS

Delta Engineers,Inc	Reinforced Wall - 24 SF Blocks	SK - 8
YL		June 8, 2017 at 4:51 PM
2017.478.001		24 SF Block.r3d

RISA

Company : Delta Engineers,Inc
Designer : YL
Job Number : 2017.478.001
Model Name : Reinforced Wall - 24 SF Blocks

June 9, 2017
11:45 AM
Checked By:_____

Basic Load Cases

	BLC Description	Category	X Gravity	Y Gravity	Z Gravity	Joint	Point	Distributed	Area(Me...	Surface(...
1	EH-rest	None								744
2	EH-active	None								360
3	LS	None								

Load Combinations

	Description	S...	P...	S...	B...	Factor	B...	Fa...	B...	Fa...	B...	Fa...	B...	Fa...	B...	Fa...	B...	Fa...	B...	Fa...	B...	Fa...	B...	Fa...
1	1.35EH-at rest +1.5EH - active + ...	Yes			1	1.35	2	1.5	3	1.75														
2	EH-at rest +EH - active +LS	Yes			1	1	2	1	3	1														

RISA

Company : Delta Engineers,Inc
Designer : YL
Job Number : 2017.478.001
Model Name : Reinforced Wall - 24 SF Blocks

June 9, 2017
11:44 AM
Checked By:_____

Plate Forces (per ft) (By Combination) FRONT FACE MAX. +Mux

	LC	Plate Label	Qx[k]	Qy[k]	Mx[k-ft]	My[k-ft]	Mxy[k-ft]	Fx[k]	Fy[k]	Fxy[k]
1	1	P372	.168	-.038	.533	.011	-.004	-.206	0	0
2	1	P373	-.168	-.038	.533	.011	.004	-.206	0	0
3	1	P548	.168	.038	.533	.01	.004	-.3	-.09	0
4	1	P549	-.168	.038	.533	.01	-.004	-.3	-.09	0
5	1	P532	.135	.053	.533	.032	.006	-.3	-.087	0
6	1	P533	-.135	.053	.533	.032	-.006	-.3	-.087	0
7	1	P389	-.135	-.054	.533	.032	.006	-.237	0	0
8	1	P388	.135	-.054	.533	.032	-.006	-.237	0	0
9	1	P517	-.132	.04	.526	.052	-.004	-.301	-.081	0
10	1	P516	.132	.04	.526	.052	.004	-.301	-.081	0

RISA

Company : Delta Engineers,Inc
Designer : YL
Job Number : 2017.478.001
Model Name : Reinforced Wall - 24 SF Blocks

June 9, 2017
11:44 AM
Checked By:_____

Plate Forces (per ft) (By Combination) FRONT FACE. MAX. - Mux

	LC	Plate Label	Qx[k]	Qy[k]	Mx[k-ft]	My[k-ft]	Mxy[k-ft]	Fx[k]	Fy[k]	Fxy[k]
1	1	P64	-2.197	-.003	-1.988	-.256	0	.054	-.153	-.076
2	1	P152	2.197	-.003	-1.988	-.256	0	.054	-.153	.076
3	1	P72	-2.2	-.052	-1.988	-.248	.005	.062	-.165	-.067
4	1	P160	2.2	-.052	-1.988	-.248	-.005	.062	-.165	.067
5	1	P56	-2.189	.041	-1.986	-.252	-.004	.047	-.137	-.086
6	1	P144	2.189	.041	-1.986	-.252	.004	.047	-.137	.086
7	1	P80	-2.191	-.116	-1.984	-.226	.01	.069	-.176	-.06
8	1	P168	2.191	-.116	-1.984	-.226	-.01	.069	-.176	.06
9	1	P48	-2.176	.085	-1.983	-.237	-.008	.039	-.116	-.095
10	1	P136	2.176	.085	-1.983	-.237	.008	.039	-.116	.095

RISA

Company : Delta Engineers,Inc
Designer : YL
Job Number : 2017.478.001
Model Name : Reinforced Wall - 24 SF Blocks

June 9, 2017
11:48 AM
Checked By:_____

Plate Forces (per ft) (By Combination) FRONT FACE MAX Qux

	LC	Plate Label	Qx[k]	Qy[k]	Mx[k-ft]	My[k-ft]	Mxy[k-ft]	Fx[k]	Fy[k]	Fxy[k]
1	1	P72	-2.2	-.052	-1.988	-.248	.005	.062	-.165	-.067
2	1	P160	2.2	-.052	-1.988	-.248	-.005	.062	-.165	.067
3	1	P64	-2.197	-.003	-1.988	-.256	0	.054	-.153	-.076
4	1	P152	2.197	-.003	-1.988	-.256	0	.054	-.153	.076
5	1	P80	-2.191	-.116	-1.984	-.226	.01	.069	-.176	-.06
6	1	P168	2.191	-.116	-1.984	-.226	-.01	.069	-.176	.06
7	1	P56	-2.189	.041	-1.986	-.252	-.004	.047	-.137	-.086
8	1	P144	2.189	.041	-1.986	-.252	.004	.047	-.137	.086
9	1	P48	-2.176	.085	-1.983	-.237	-.008	.039	-.116	-.095
10	1	P136	2.176	.085	-1.983	-.237	.008	.039	-.116	.095

RISA

Company : Delta Engineers,Inc
Designer : YL
Job Number : 2017.478.001
Model Name : Reinforced Wall - 24 SF Blocks

June 9, 2017
11:50 AM
Checked By:_____

Plate Forces (per ft) (By Combination) REAR FACE, MAX. +Mux

	LC	Plate Label	Qx[k]	Qy[k]	Mx[k-ft]	My[k-ft]	Mxy[k-ft]	Fx[k]	Fy[k]	Fxy[k]
1	1	P723	.119	.028	.659	.017	.003	.045	-.043	0
2	1	P724	-.119	.028	.659	.017	-.003	.045	-.043	0
3	1	P579	.119	-.027	.659	.016	-.003	.087	0	0
4	1	P580	-.119	-.027	.659	.016	.003	.087	0	0
5	1	P740	-.137	.02	.657	.006	-.002	.044	-.044	0
6	1	P739	.137	.02	.657	.006	.002	.044	-.044	0
7	1	P563	.136	-.019	.657	.006	-.002	.097	0	0
8	1	P564	-.136	-.019	.657	.006	.002	.097	0	0
9	1	P595	.118	-.021	.656	.027	-.002	.08	-.009	0
10	1	P596	-.118	-.021	.656	.027	.002	.08	-.009	0

RISA

Company : Delta Engineers,Inc
Designer : YL
Job Number : 2017.478.001
Model Name : Reinforced Wall - 24 SF Blocks

June 9, 2017
11:50 AM
Checked By:____

Plate Forces (per ft) (By Combination) REAR FACE . MAX . - Mwx

	LC	Plate Label	Qx[k]	Qy[k]	Mx[k-ft]	My[k-ft]	Mxy[k-ft]	Fx[k]	Fy[k]	Fxy[k]
1	1	P296	6.522	8.127	-1.55	-1.686	.401	.102	1.28	.048
2	1	P219	-6.522	8.127	-1.55	-1.686	-.401	.102	1.28	-.048
3	1	P303	6.456	-8.508	-1.542	-1.619	-.392	.13	1.157	.271
4	1	P226	-6.456	-8.508	-1.542	-1.619	.392	.13	1.157	-.271
5	1	P345	6.335	-8.006	-1.535	-1.579	-.39	.246	.823	.155
6	1	P268	-6.335	-8.006	-1.535	-1.579	.39	.246	.823	-.155
7	1	P338	6.297	8.337	-1.525	-1.525	.383	.244	.867	.024
8	1	P261	-6.297	8.337	-1.525	-1.525	-.383	.244	.867	-.024
9	1	P603	-4.217	4.016	-1.291	-.432	-.019	-.162	.657	.185
10	1	P588	4.217	4.016	-1.291	-.432	.019	-.162	.657	-.185

RISA

Company : Delta Engineers,Inc
Designer : YL
Job Number : 2017.478.001
Model Name : Reinforced Wall - 24 SF Blocks

June 9, 2017
11:51 AM
Checked By:_____

Plate Forces (per ft) (By Combination) REAR FACE. MAX. Qux

	LC	Plate Label	Qx[k]	Qy[k]	Mx[k-ft]	My[k-ft]	Mxy[k-ft]	Fx[k]	Fy[k]	Fxy[k]
1	1	P219	-6.522	8.127	-1.55	-1.686	-.401	.102	1.28	-.048
2	1	P296	6.522	8.127	-1.55	-1.686	.401	.102	1.28	.048
3	1	P226	-6.456	-8.508	-1.542	-1.619	.392	.13	1.157	-.271
4	1	P303	6.456	-8.508	-1.542	-1.619	-.392	.13	1.157	.271
5	1	P268	-6.335	-8.006	-1.535	-1.579	.39	.246	.823	-.155
6	1	P345	6.335	-8.006	-1.535	-1.579	-.39	.246	.823	.155
7	1	P261	-6.297	8.337	-1.525	-1.525	-.383	.244	.867	-.024
8	1	P338	6.297	8.337	-1.525	-1.525	.383	.244	.867	.024
9	1	P588	4.217	4.016	-1.291	-.432	.019	-.162	.657	-.185
10	1	P603	-4.217	4.016	-1.291	-.432	-.019	-.162	.657	.185

RISA

Company : Delta Engineers,Inc
Designer : YL
Job Number : 2017.478.001
Model Name : Reinforced Wall - 24 SF Blocks

June 9, 2017
11:52 AM
Checked By:_____

Plate Primary Data

PLATE THICKNESS

	Label	A Joint	B Joint	C Joint	D Joint	Material	Thickness[in]
208	P214	N258	N259	N267	N266	gen_Conc3NW	5.56
209	P215	N259	N260	N268	N267	gen_Conc3NW	6.75
210	P216	N260	N261	N269	N268	gen_Conc3NW	8.25
211	P217	N261	N262	N270	N269	gen_Conc3NW	10.06
212	P218	N262	N263	N271	N270	gen_Conc3NW	12.56
213	P219	N263	N264	N272	N271	gen_Conc3NW	14.125
214	P220	N265	N266	N274	N273	gen_Conc3NW	4.5
215	P221	N266	N267	N275	N274	gen_Conc3NW	5.56
216	P222	N267	N268	N276	N275	gen_Conc3NW	6.75
217	P223	N268	N269	N277	N276	gen_Conc3NW	8.25
218	P224	N269	N270	N278	N277	gen_Conc3NW	10.06

RISA

Company : Delta Engineers,Inc
Designer : YL
Job Number : 2017.478.001
Model Name : Reinforced Wall - 24 SF Blocks

June 9, 2017
12:27 PM
Checked By:_____

Plate Forces (per ft) (By Combination) WEB. MAX. Fux

	LC	Plate Label	Qx[k]	Qy[k]	Mx[k-ft]	My[k-ft]	Mxy[k-ft]	Fx[k]	Fy[k]	Fxy[k]
1	1	P790	.387	.081	.212	.044	.006	9.812	.818	5.036
2	1	P921	-.387	-.081	-.212	-.044	-.006	9.812	.818	5.036
3	1	P845	.389	-.092	.21	.044	-.006	9.799	.813	-4.417
4	1	P976	-.389	.092	-.21	-.044	.006	9.799	.813	-4.417
5	1	P856	.398	.078	.213	.043	.009	9.726	.793	4.83
6	1	P987	-.398	-.078	-.213	-.043	-.009	9.726	.793	4.83
7	1	P779	.396	-.066	.215	.043	-.009	9.69	.802	-4.288
8	1	P910	-.396	.066	-.215	-.043	.009	9.69	.802	-4.288
9	1	P789	.322	.033	.12	.023	-.001	6.913	-.872	1.739
10	1	P920	-.322	-.033	-.12	-.023	.001	6.913	-.872	1.739

DELTA
SPECIALTY PRECAST CONCRETE ENGINEERS
860 Hooper Road, Endwell, NY 13760
www.delta-eas.com
Phone: (607) 231-6600
Fax: (607) 231-6650

JOB	2017.478.001		
DESCRIPTION	Reinforced Wall - 24SF - 50ft		
SHEET NO.		OF	SCALE
CALCULATED BY	YL	DATE	6/8/2017
CHECKED BY		DATE	

Reinforce Wall - Maximum 50ft Wall Height
24SF Blocks

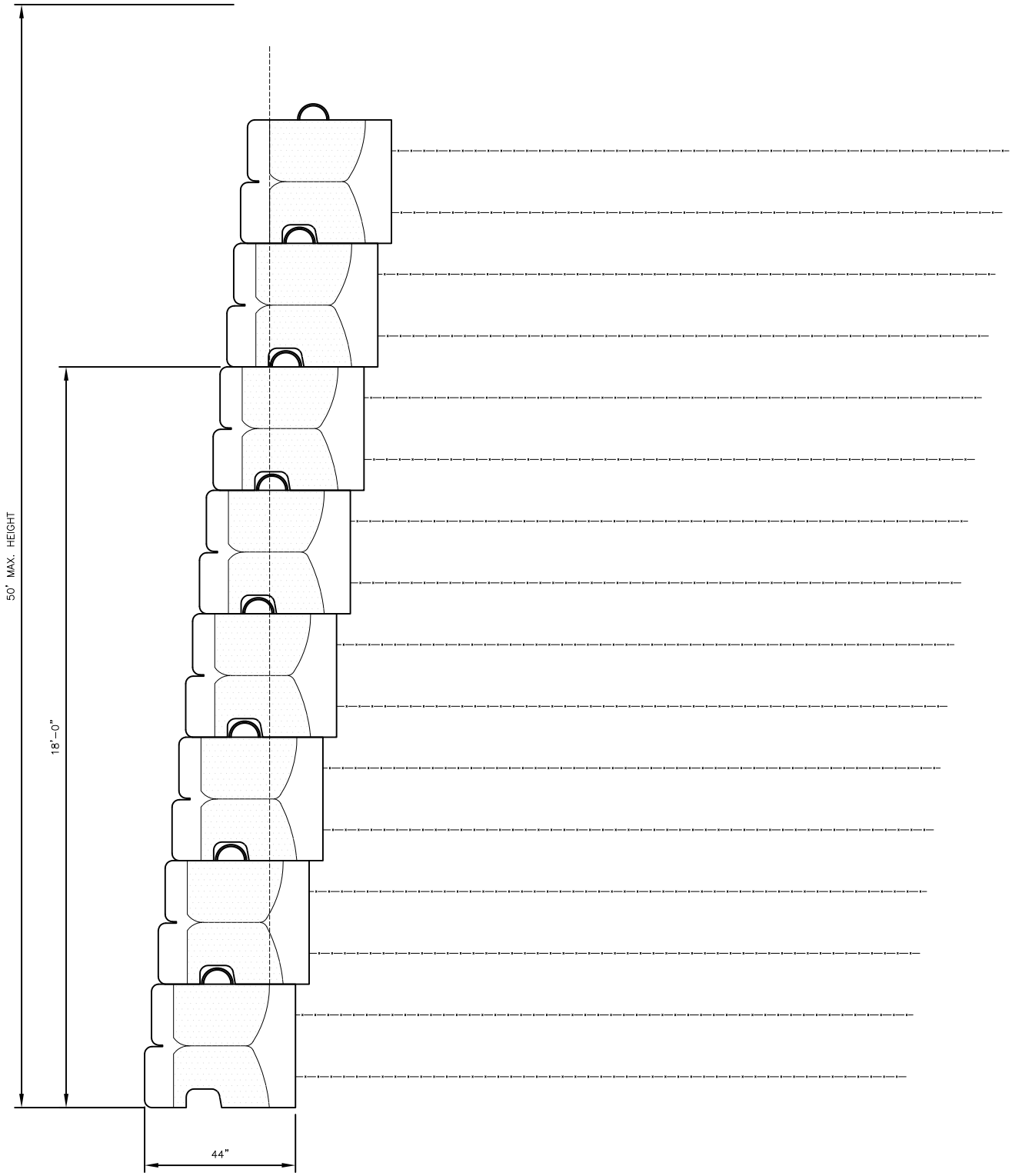

REINFORCED WALL – 50' MAX. HEIGHT
24 SF UNIT

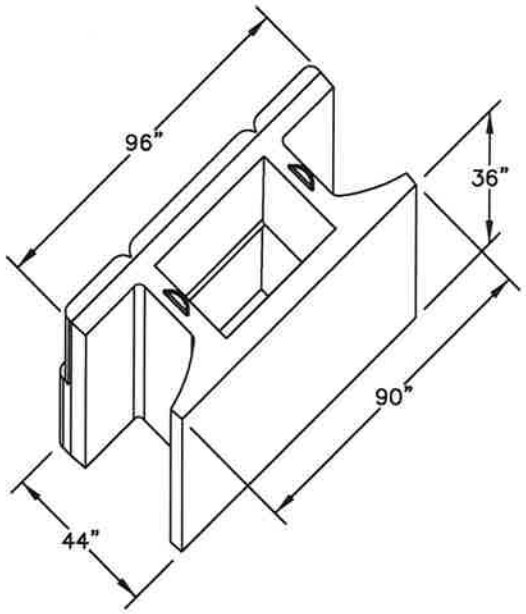

REAR VIEW
STONE STRONG 24SF UNIT

NOT TO SCALE

DISCLAIMER:

These typical details are preliminary and conceptual in nature. They are provided for general information purposes only. Anyone making use of these details and related information does so at their own risk and assumes all liability for such use. Site specific design should be performed by a licensed Professional Engineer based on actual site conditions, materials, and local practices.

Stone Strong LLC retains al common law, statutory, and other reserved rights to these drawings including the copyright. Limited license is granted to copy, reproduce, or modify the details to prepare construction drawings for Stone Strong retaining walls. Stone Strong LLC makes no warranties, either expressed or implied, of merchantability or fitness for any particular purpose, and accepts no responsibility for the accuracy, suitability, or completeness of information contained herein.

STONE STRONG SYSTEMS

www.stonestrong.com

PROJECT

COMPONENTS
STONE STRONG SYSTEMS

DATE: 2/10/16 | FILE: 05_Block.24sf.Rear

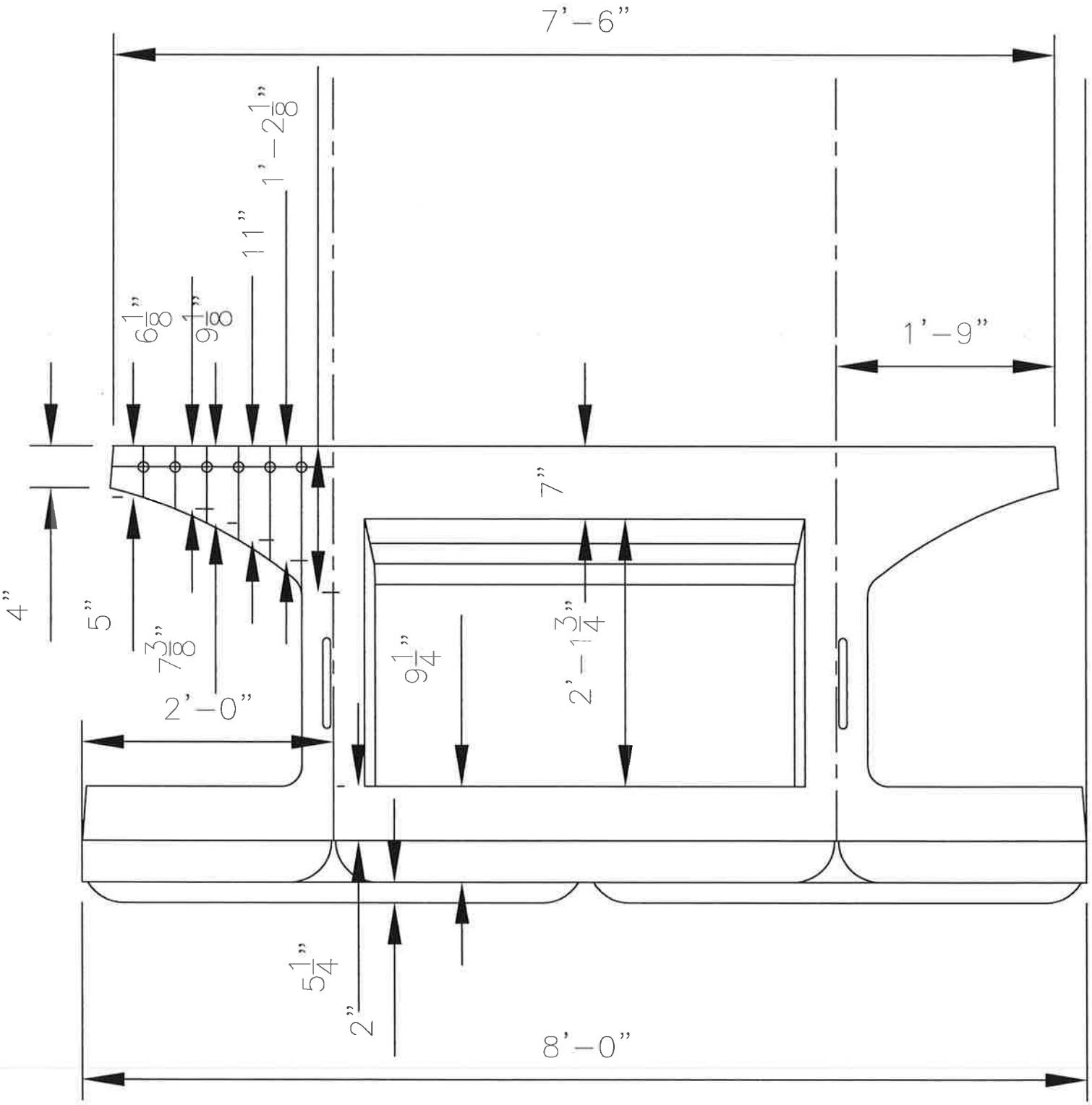

24 SF UNIT

DELTA
SPECIALTY PRECAST CONCRETE ENGINEERS
860 Hooper Road, Endwell, NY 13760
www.delta-eas.com
Phone: (607) 231-6600
Fax: (607) 231-6650

JOB	2017.478.001		
DESCRIPTION	Reinforced Wall - 24SF - 50ft		
SHEET NO.	OF	SCALE	
CALCULATED BY	YL	DATE	11/16/2017
CHECKED BY		DATE	

Load Calculations - 24 SF Blocks - 50' Wall Height

Internal Pressure from Infill

Infill Density =	100	pcf
ko =	0.5	
Height to Middle of Bottom Block =	16.5	ft
Internal Pressure (at rest) =	825	psf

External Pressure from Retained Soil

Soil Density =	120	pcf
ka =	0.33	
Height to Middle of Bottom Block =	48.5	ft
External Pressure (active) =	1921	psf
Live Load Surcharge =	0	psf

Item 5.

DELTA
SPECIALTY PRECAST CONCRETE ENGINEERS
860 Hooper Road, Endwell, NY 13760
www.delta-eas.com
Phone: (607) 231-6600
Fax: (607) 231-6650

JOB	2017.478.001		
DESCRIPTION	Reinforced Wall - 24SF - 50ft		
SHEET NO.	OF	SCALE	
CALCULATED BY	YL	DATE	6/8/2017
CHECKED BY		DATE	

Risa Results - 24SF - 50' Wall Height

fc' = 5000 psi
5*√f'c = 354 psi

Front Face:

-Mu =	1.99	k-ft/ft	
Thickness t =	8	in	
S = 12 t^2/6=	128	in^3	
ϕMn =0.6* 5*√f'c S =	2.26	k-ft/ft	OK
+Mu =	0.55	k-ft/ft	
Thickness t =	6	in	
S = 12 t^2/6=	72	in^3	
ϕMn =0.6* 5*√f'c S =	1.27	k-ft/ft	OK
Vu =	2.20	k/ft	
Thickness t =	8	in	
ϕVn =0.6* 4/3*√f'c *12 t =	5.43	k-ft/ft	OK

Front Face Reinforcing required for temperature and shrinkage only.

Rear Face:

-Mu =	2.70	k-ft/ft	
Thickness t =	7	in	
S = 12 t^2/6=	98	in^3	
ϕMn =0.6* 5*√f'c S =	1.73	k-ft/ft	NG PROVIDE REINFORCING SEE ATTACHED.
+Mu =	1.12	k-ft/ft	
Thickness t =	7	in	
S = 12 t^2/6=	98	in^3	
ϕMn =0.6* 5*√f'c S =	1.73	k-ft/ft	OK
Vu =	9.60	k/ft	
Thickness t =	14.13	in	
ϕVn =0.6* 4/3*√f'c *12 t =	9.59	k-ft/ft	~~NG~~ SAY OK

Rear Face Reinforcing required for strength.

DELTA
SPECIALTY PRECAST CONCRETE ENGINEERS
860 Hooper Road, Endwell, NY 13760
www.delta-eas.com
Phone: (607) 231-6600
Fax: (607) 231-6650

JOB	2017.478.001			
DESCRIPTION	Reinforced Wall - 24SF - 50ft			
SHEET NO.		OF	SCALE	
CALCULATED BY	YL		DATE	6/8/2017
CHECKED BY			DATE	

Risa Results - 24SF - 50' Wall Height

Web

			fc' =	5000 psi
			5*√f'c =	354 psi
Tu =	11.75	k/ft		
Thickness t =	6	in		
ϕTn =0.6*5*√f'c *12 t =	15.27	k-ft/ft	OK	

Web Reinforcing required for temperature and shrinkage only.

Item 5.

DELTA
SPECIALTY PRECAST CONCRETE ENGINEERS
860 Hooper Road, Endwell, NY 13760
www.delta-eas.com
Phone: (607) 231-6600
Fax: (607) 231-6650

JOB	2017.478.001			
DESCIPTION	Stonestrong Retaining Wall			
SHEET NO.		OF	SCALE	
CALCULATED BY	YL	DATE	11/20/2017	
CHECKED BY		DATE		

24SF Block Rear Face Reinforcing

AASHTO LRFD - 7th Edition

Limit State: Strength 1

MATERIAL PROPERTIES:

1 Concrete Strength, F'c	5	ksi
2 Reinforcing Steel Yield, Fy	60	ksi
3 Concrete Unit Weight	150	pcf
4 Soil Unit Weight	120	pcf

Member Design Width b =	12.00	in
Member Thickness Ts =	7.00	in
Bar Cover =	2.00	in
Bar Size =	4	
de=Ts-Cov-Bar Size/2 =	4.75	in

$E_c = 120{,}000\ K_1\ wc^{2.0}\ f'c^{0.33}$ = 4.59E+03 ksi

Es = 29000 ksi

n = Es / Ec = 6.32

0.65 < β1 < 0.85 = 0.80

$$\rho_b = \frac{0.85\beta_1 \bullet f'c}{f_y} \bullet \left[\frac{87{,}000}{87{,}000 + f_y}\right] = 0.0335$$

fr = .24 * λ * √f'c = 0.54 ksi AASHTO 5.7.3.3

Capacity Reduction Factors

(ϕM=0.75+0.15[(εt-εcl)/(εtl-εcl)], 0.75min, 0.9max, Fig. C5.5.4.2.1-1)

Unfactored Moment, Ma =	1.07	kip-ft
Design Ultimate Moment, Mu =	2.70	kip-ft
Ultimate Shear, Vu =		kips

Moment, ΦM = 0.9

Shear, ΦV = 0.9

β = 2.0

dv = Greater of .72h or 0.9 de = 5.04 in

Vc=ϕ(0.0316)β√f'c*b*dv= 7.69 kips/ft **> Vu OK**

$$\rho = \left[1 - \left(\sqrt{1 - \frac{2 \bullet M_u}{\phi b d^2 \bullet .85 f'c}}\right)\right] \bullet \frac{.85 f'c}{f_y} = 0.00225$$

Steel Area Req'd; As =ρ * b * d = 0.128 in²/ft

#4 Bar @ 12.00 in oc

As Prov = 0.20 in²/ft

Use #4 Prov = 0.00344 **OK**

Check c/d Ratio: (Art. 5.7.2.1)

c=As*Fy/.85*f'c*β1*b = 0.289 in

c/de ≤ 0.003/(0.003+εcl); c/de = 0.061 **OK, Use Fy**

a = β1c = 0.231 in

Sc = bt²/6 = 98 in³

Flexural cracking var. fac. (Other Con. Strs.) 1.60 γ1

A615, Gr. 60 Reinforcement (Carbon steel) 0.67 γ3

AASHTO 5.7.3.3.2-1 Mcr = γ3 * [(γ1 * fr)*Sc] = 4.70 kip-ft

φMn = φAsfy(de-a/2)/12 = 4.095 kip-ft **OK**
AASHTO 5.7.3.2.2-1

Mr = ϕMn > (lesser of Mcr or 1.33 Mu)

Mcr = 4.70 kip-ft

1.33 * Mu = 3.59 kip-ft <= Controls

Mr = ϕMn = 4.09 kip-ft **OK**

CHECK CRACKING AASHTO 5.7.3.4

$$k = \sqrt{2\rho n + (\rho n)^2} - \rho n = 0.188$$

j = 1 - (k/3) = 0.937

fs = Ma/(As*j*d) = 14.69 ksi

max spa ≤ [(700γe) / (βsfs)] - 2dc = 17 in **OK**

dc= 2.25 in

Bs=1+dc/(0.7*(h-dc))= 1.677

γe= 0.75

DELTA
SPECIALTY PRECAST CONCRETE ENGINEERS
860 Hooper Road, Endwell, NY 13760
www.delta-eas.com
Phone: (607) 231-6600
Fax: (607) 231-6650

JOB	2017.478.001		
DESCRIPTION	Stonestrong Retaining Wall -24 SF Blocks		
SHEET NO.		OF	SCALE
CALCULATED BY	YL	DATE	6/8/2017
CHECKED BY		DATE	

Temperature and Shrinkage Reinforcing (AASHTO LRFD 5.10.8)

fy = 60 ksi

$$As = \frac{1.30\ bh}{2(b + h)Fy}$$

0.11<= As <= 0.6

b =	36	in	Least Width of Component Section
h =	6	in	Least Thickness of Component Section

As = 0.11 in^2/ft

Provide W4xW4 - 4x4 Wire Mesh in front face, webs and rear face.

Bend web mesh into front face to form a standard hook.

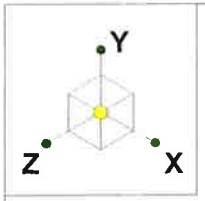

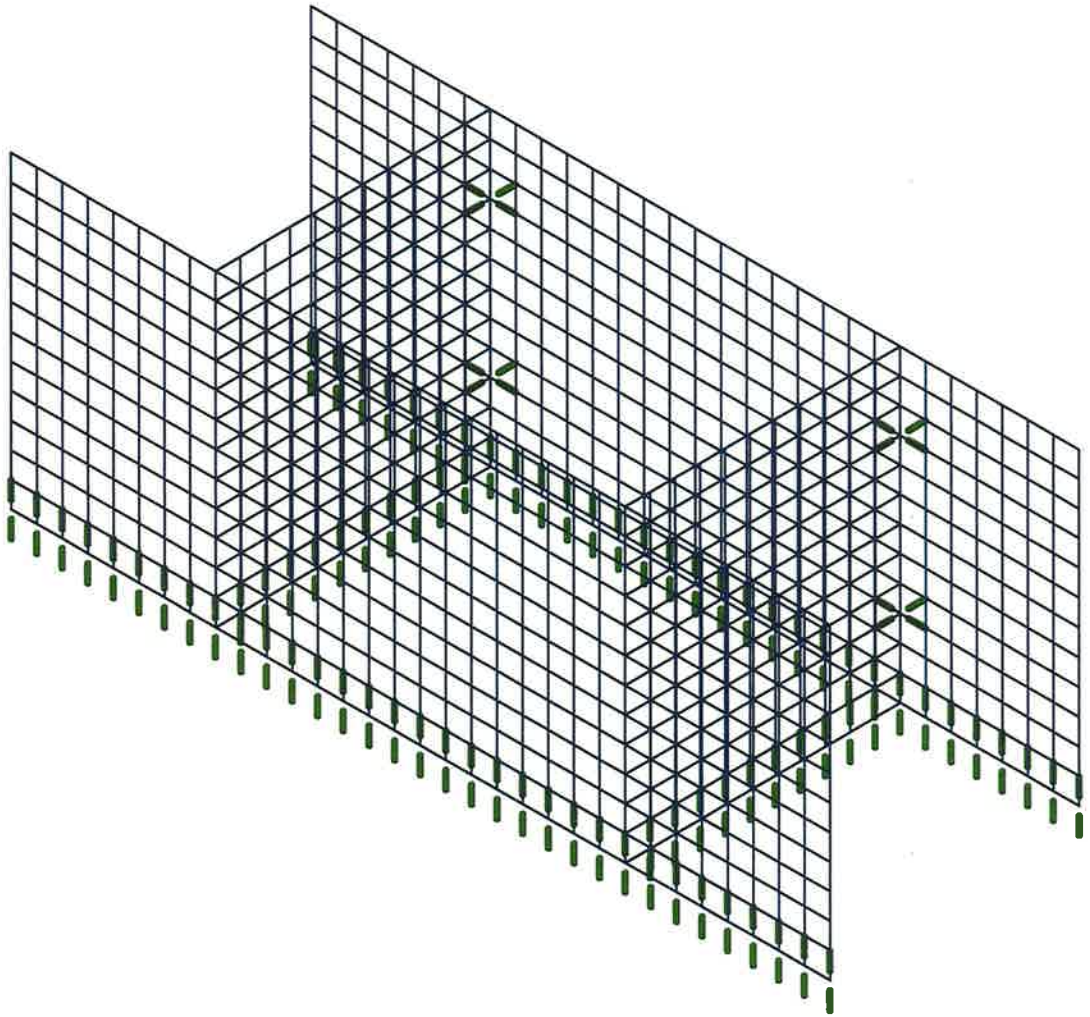

Delta Engineers,Inc	Reinforced Wall 50ft - 24 SF Blocks	SK - 1
YL		Nov 16, 2017 at 10:38 AM
2017.478.001		24 SF Block_50ft Wall.r3d

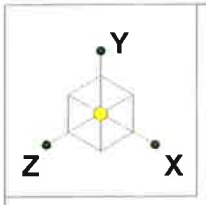

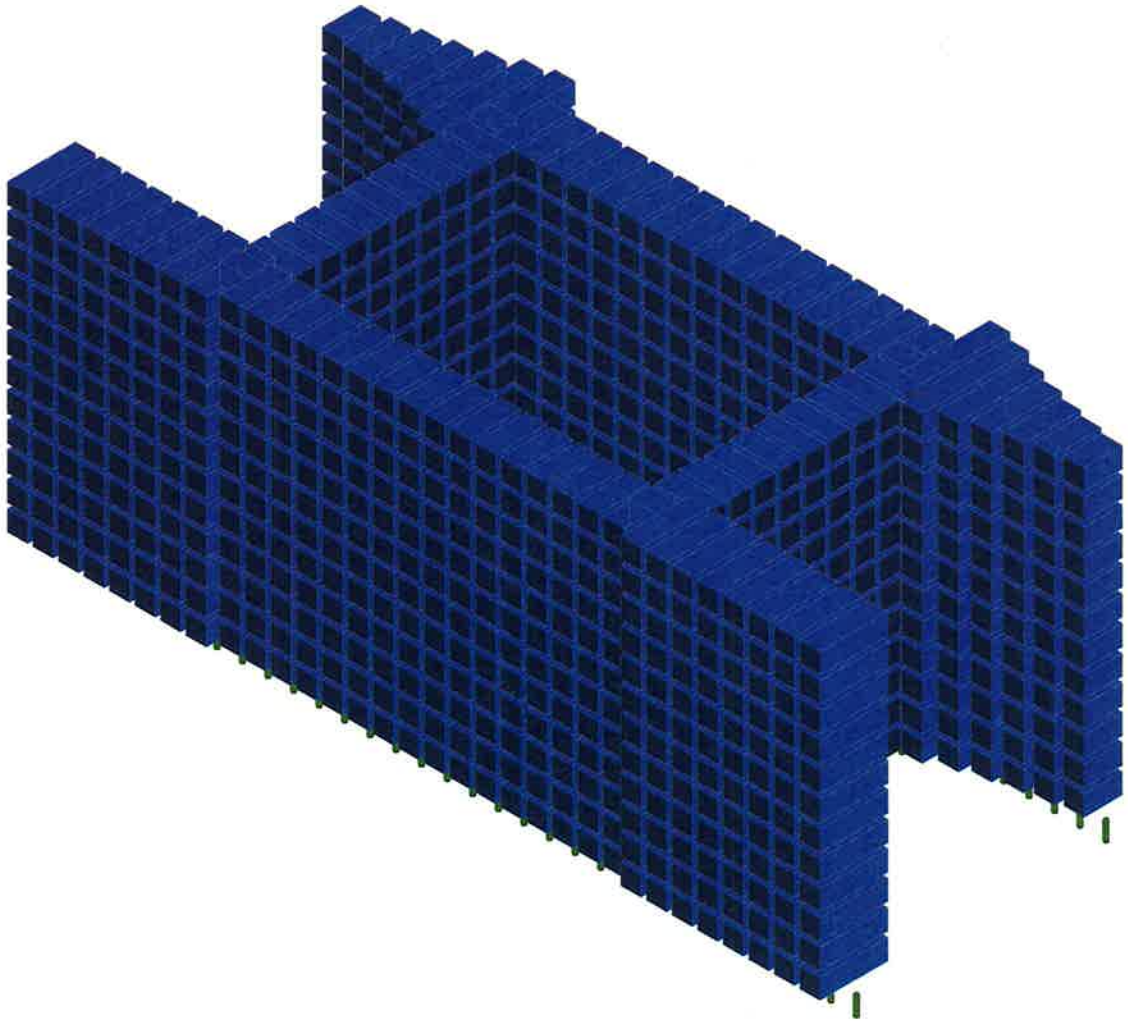

Delta Engineers,Inc	Reinforced Wall 50ft - 24 SF Blocks	SK - 2
YL		Nov 16, 2017 at 10:38 AM
2017.478.001		24 SF Block_50ft Wall.r3d

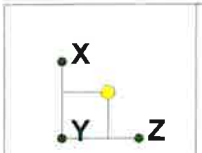

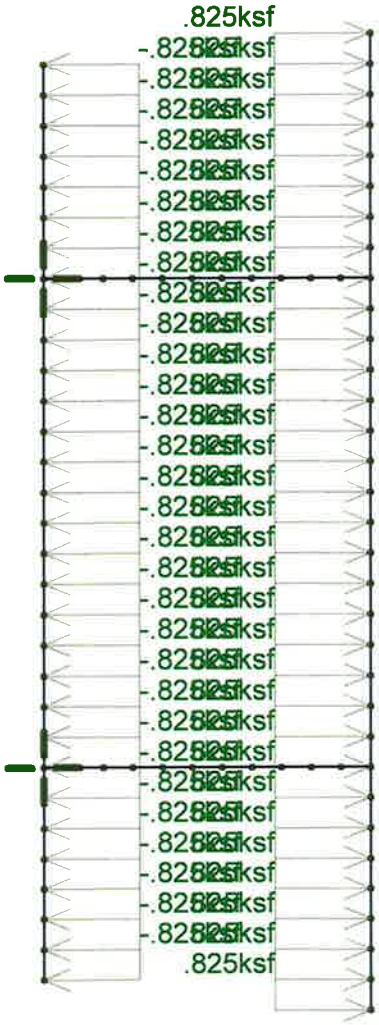

Internal Pressure

Loads: BLC 1, EH-rest

Delta Engineers,Inc	Reinforced Wall 50ft - 24 SF Blocks	SK - 3
YL		Nov 16, 2017 at 10:39 AM
2017.478.001		24 SF Block_50ft Wall.r3d

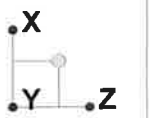

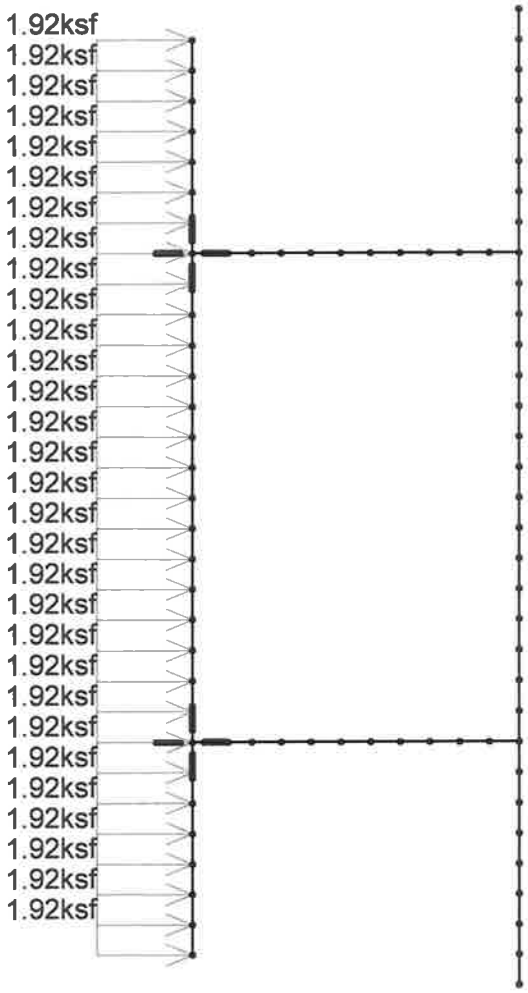

External Pressure

Loads: BLC 2, EH-active

Delta Engineers,Inc	Reinforced Wall 50ft - 24 SF Blocks	SK - 4
YL		Nov 16, 2017 at 10:39 AM
2017.478.001		24 SF Block_50ft Wall.r3d

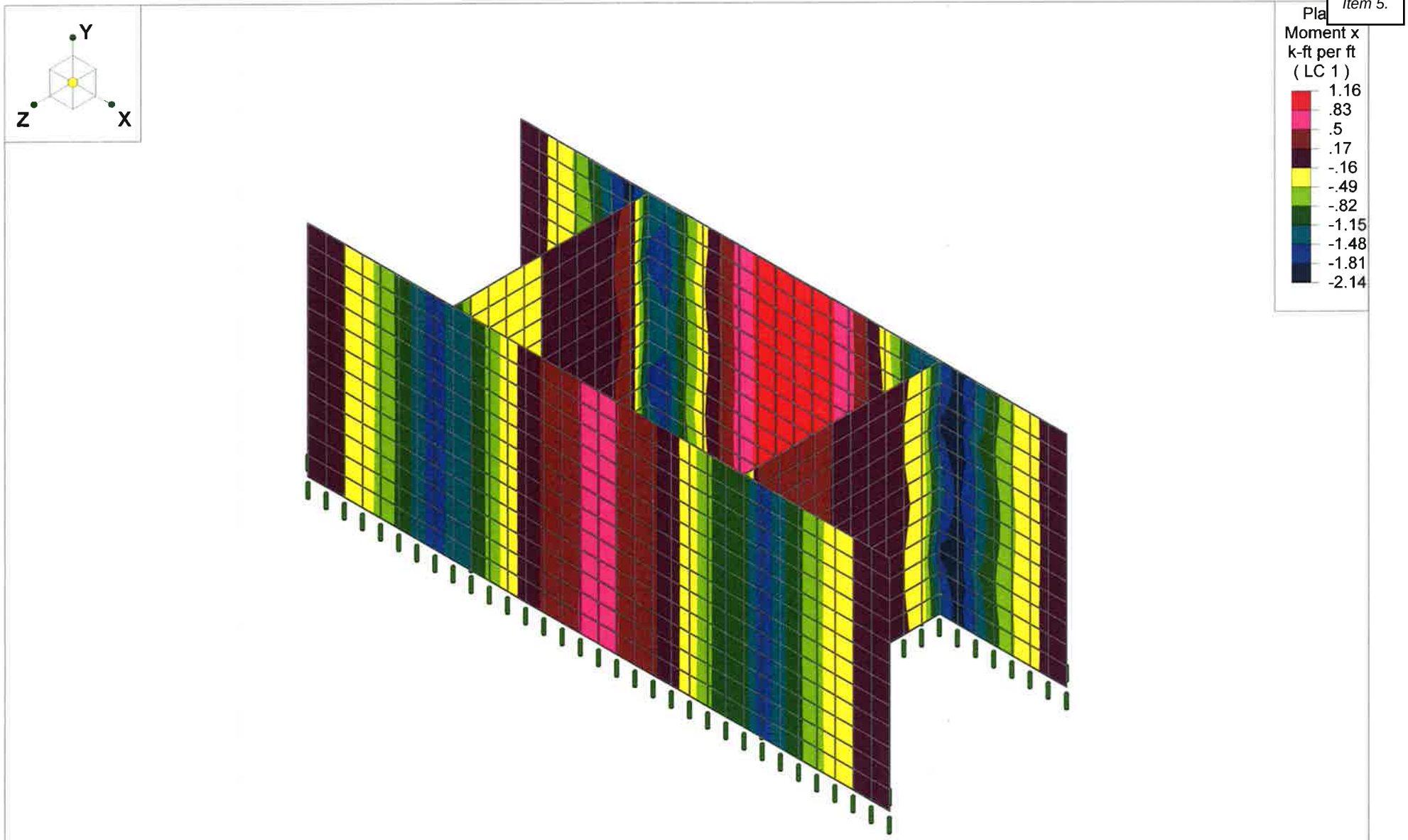

Results for LC 1, 1.35EH-at rest +1.5EH - active + 1.75LS

Delta Engineers,Inc	Reinforced Wall 50ft - 24 SF Blocks	SK - 5
YL		Nov 16, 2017 at 10:39 AM
2017.478.001		24 SF Block_50ft Wall.r3d

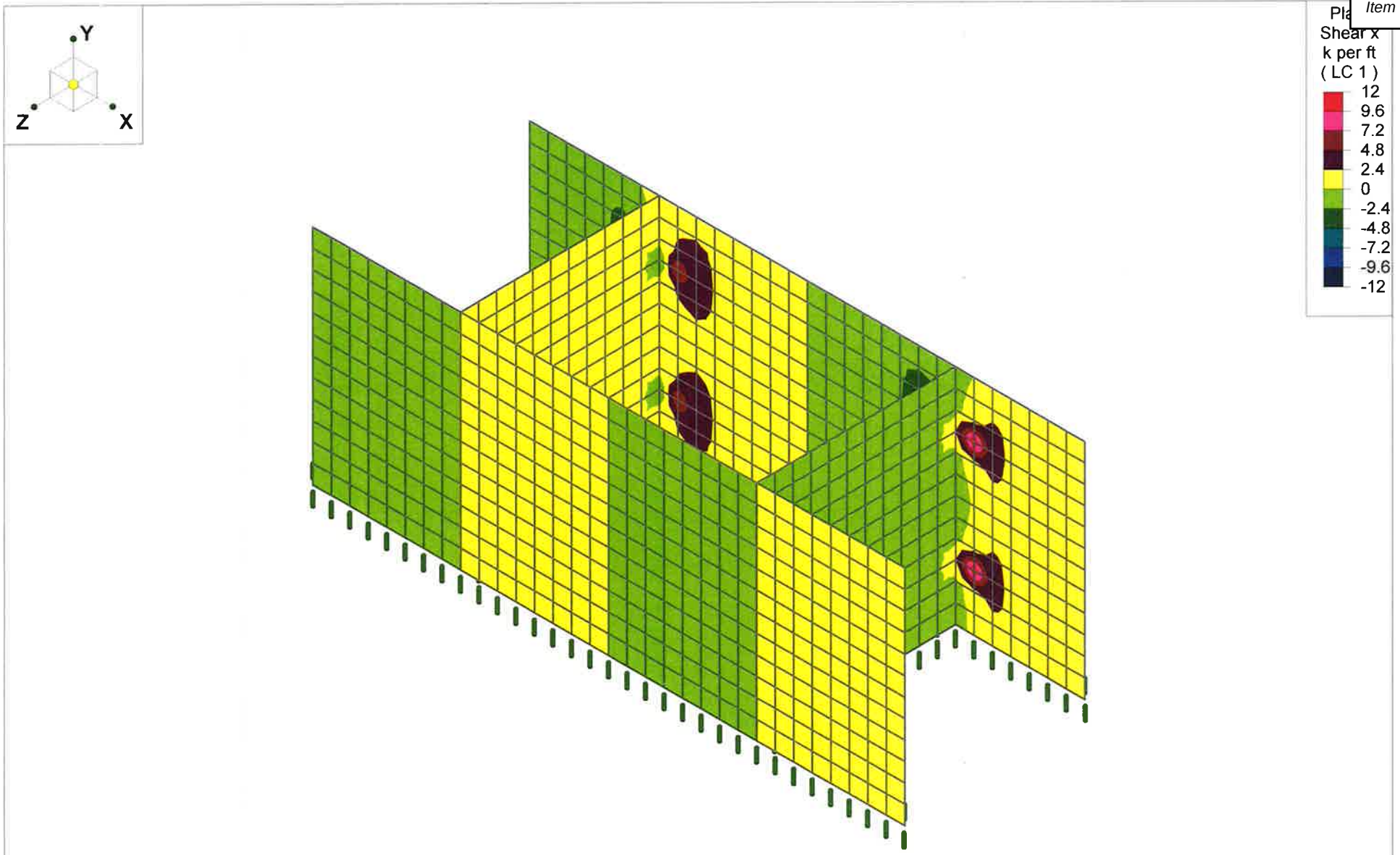

Results for LC 1, 1.35EH-at rest +1.5EH - active + 1.75LS

Delta Engineers,Inc	Reinforced Wall 50ft - 24 SF Blocks	SK - 6
YL		Nov 16, 2017 at 10:40 AM
2017.478.001		24 SF Block_50ft Wall.r3d

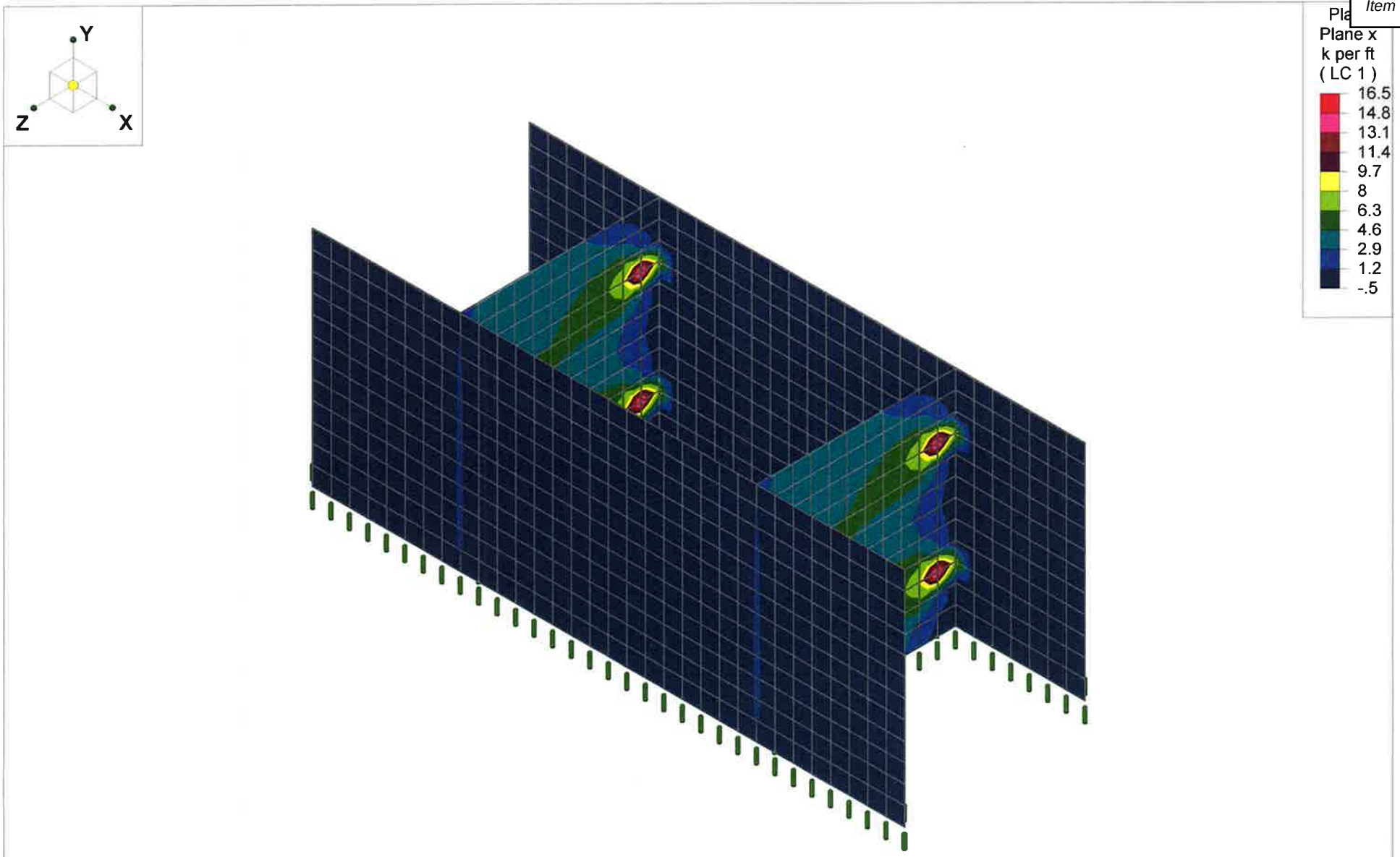

Results for LC 1, 1.35EH-at rest +1.5EH - active + 1.75LS

Delta Engineers,Inc	Reinforced Wall 50ft - 24 SF Blocks	SK - 7
YL		Nov 16, 2017 at 10:41 AM
2017.478.001		24 SF Block_50ft Wall.r3d

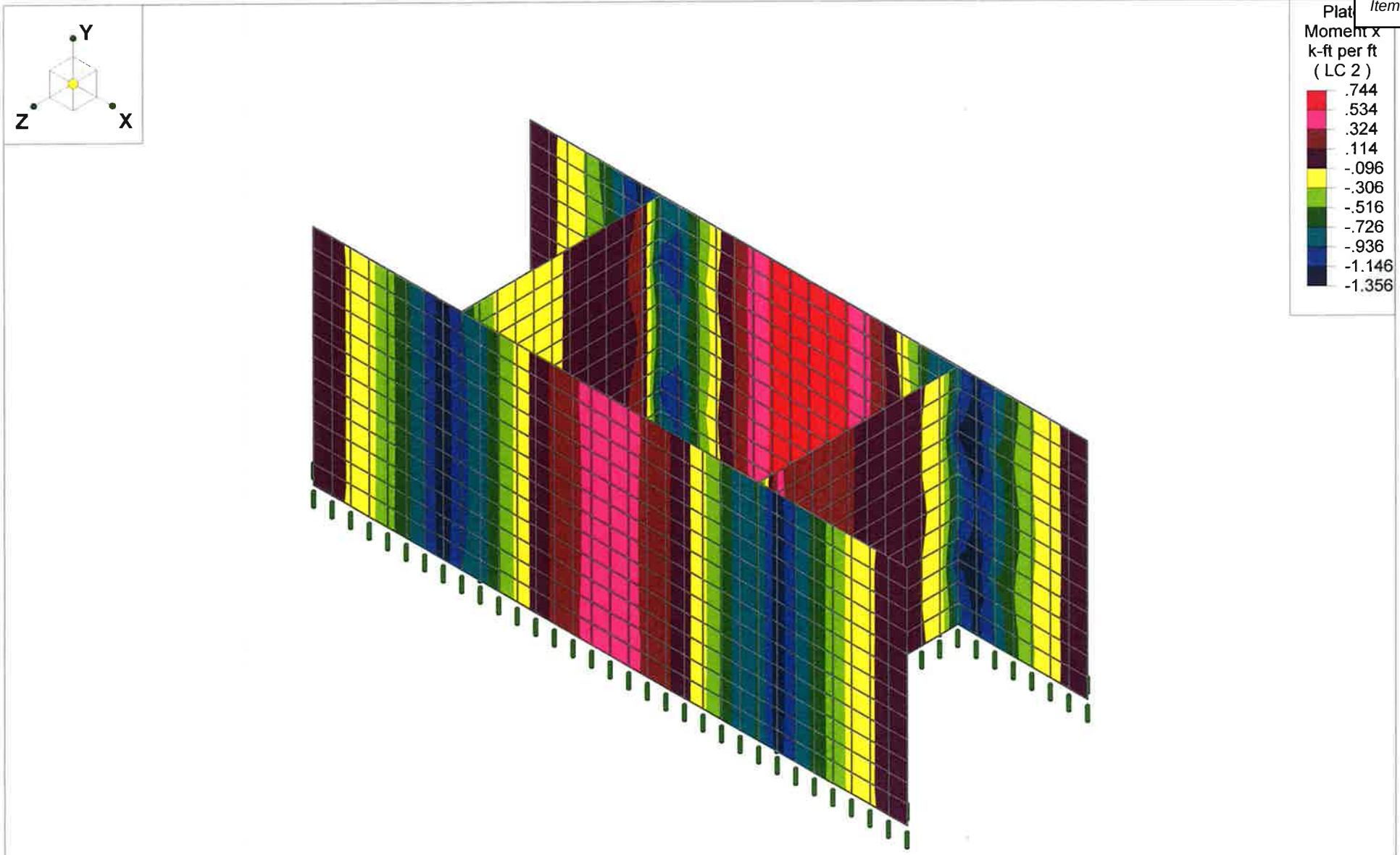

Results for LC 2, EH-at rest +EH - active +LS

Delta Engineers,Inc	Reinforced Wall 50ft - 24 SF Blocks	SK - 8
YL		Nov 16, 2017 at 10:41 AM
2017.478.001		24 SF Block_50ft Wall.r3d

Company : Delta Engineers,Inc
Designer : YL
Job Number : 2017.478.001
Model Name : Reinforced Wall 50ft - 24 SF Blocks

Nov 16, 2017
10:42 AM
Checked By:_____

Basic Load Cases

	BLC Description	Category	X Gravity	Y Gravity	Z Gravity	Joint	Point	Distributed	Area(Me...	Surface(...
1	EH-rest	None								744
2	EH-active	None								360
3	LS	None								

Load Combinations

	Description	S...	P...	S...	B...	Factor	B...	Fa...	B...	Fa...	B...	Fa...	B...	Fa...	B...	Fa...	B...	Fa...	B...	Fa...	B...	Fa...	B...	Fa...
1	1.35EH-at rest +1.5EH - active + ...	Yes			1	1.35	2	1.5	3	1.75														
2	EH-at rest +EH - active +LS	Yes			1	1	2	1	3	1														

Item 5.

Plate Forces (per ft) (By Combination) FRONT FACE MAX +Mux

	LC	Plate Label	Qx[k]	Qy[k]	Mx[k-ft]	My[k-ft]	Mxy[k-ft]	Fx[k]	Fy[k]	Fxy[k]
1	1	P372	.168	-.039	.546	.011	-.005	-.242	0	0
2	1	P373	-.168	-.039	.546	.011	.005	-.242	0	0
3	1	P549	-.168	.038	.546	.01	-.004	-.341	-.094	0
4	1	P548	.168	.038	.546	.01	.004	-.341	-.094	0
5	1	P533	-.135	.054	.546	.032	-.006	-.342	-.091	0
6	1	P532	.135	.054	.546	.032	.006	-.342	-.091	0
7	1	P389	-.135	-.054	.546	.032	.006	-.274	0	0
8	1	P388	.135	-.054	.546	.032	-.006	-.274	0	0
9	1	P517	-.132	.041	.54	.053	-.004	-.343	-.085	0
10	1	P516	.132	.041	.54	.053	.004	-.343	-.085	0

Item 5.

Plate Forces (per ft) (By Combination) FRONT FACE MAX. −Mux

	LC	Plate Label	Qx[k]	Qy[k]	Mx[k-ft]	My[k-ft]	Mxy[k-ft]	Fx[k]	Fy[k]	Fxy[k]
1	1	P64	-2.195	-.002	-1.987	-.256	0	.054	-.158	-.08
2	1	P152	2.195	-.002	-1.987	-.256	0	.054	-.158	.08
3	1	P72	-2.199	-.051	-1.987	-.248	.006	.061	-.171	-.071
4	1	P160	2.199	-.051	-1.987	-.248	-.006	.061	-.171	.071
5	1	P56	-2.187	.041	-1.985	-.252	-.004	.046	-.14	-.09
6	1	P144	2.187	.041	-1.985	-.252	.004	.046	-.14	.09
7	1	P80	-2.191	-.114	-1.983	-.226	.01	.069	-.183	-.063
8	1	P168	2.191	-.114	-1.983	-.226	-.01	.069	-.183	.063
9	1	P48	-2.174	.085	-1.982	-.237	-.008	.037	-.118	-.098
10	1	P136	2.174	.085	-1.982	-.237	.008	.037	-.118	.098

RISA

Company : Delta Engineers,Inc
Designer : YL
Job Number : 2017.478.001
Model Name : Reinforced Wall 50ft - 24 SF Blocks

Nov 16, 2017
10:44 AM
Checked By:_____

Plate Forces (per ft) (By Combination) FRONT FACE MAX Qux

	LC	Plate Label	Qx[k]	Qy[k]	Mx[k-ft]	My[k-ft]	Mxy[k-ft]	Fx[k]	Fy[k]	Fxy[k]
1	1	P72	-2.199	-.051	-1.987	-.248	.006	.061	-.171	-.071
2	1	P160	2.199	-.051	-1.987	-.248	-.006	.061	-.171	.071
3	1	P64	-2.195	-.002	-1.987	-.256	0	.054	-.158	-.08
4	1	P152	2.195	-.002	-1.987	-.256	0	.054	-.158	.08
5	1	P80	-2.191	-.114	-1.983	-.226	.01	.069	-.183	-.063
6	1	P168	2.191	-.114	-1.983	-.226	-.01	.069	-.183	.063
7	1	P56	-2.187	.041	-1.985	-.252	-.004	.046	-.14	-.09
8	1	P144	2.187	.041	-1.985	-.252	.004	.046	-.14	.09
9	1	P48	-2.174	.085	-1.982	-.237	-.008	.037	-.118	-.098
10	1	P136	2.174	.085	-1.982	-.237	.008	.037	-.118	.098

Item 5.

Plate Forces (per ft) (By Combination) REAR FACE. MAX. +Mux

	LC	Plate Label	Qx[k]	Qy[k]	Mx[k-ft]	My[k-ft]	Mxy[k-ft]	Fx[k]	Fy[k]	Fxy[k]
1	1	P723	.217	.059	1.117	.035	.006	.058	-.032	0
2	1	P724	-.217	.059	1.117	.035	-.006	.058	-.032	0
3	1	P579	.217	-.057	1.117	.034	-.006	.094	0	0
4	1	P580	-.217	-.057	1.117	.034	.006	.094	0	0
5	1	P739	.252	.041	1.114	.012	.005	.056	-.033	0
6	1	P740	-.252	.041	1.114	.012	-.005	.056	-.033	0
7	1	P563	.251	-.04	1.114	.012	-.005	.099	0	0
8	1	P564	-.251	-.04	1.114	.012	.005	.099	0	0
9	1	P595	.213	-.044	1.111	.057	-.004	.092	-.01	0
10	1	P596	-.213	-.044	1.111	.057	.004	.092	-.01	0

Item 5.

RISA

Company : Delta Engineers,Inc
Designer : YL
Job Number : 2017.478.001
Model Name : Reinforced Wall 50ft - 24 SF Blocks

Nov 16, 2017
10:45 AM
Checked By:_____

Plate Forces (per ft) (By Combination)

REAR FACE MAX. $-M_{ux}$

	LC	Plate Label	Qx[k]	Qy[k]	Mx[k-ft]	My[k-ft]	Mxy[k-ft]	Fx[k]	Fy[k]	Fxy[k]
1	1	P296	9.607	11.156	-2.7	-2.282	.549	.094	1.821	-.032
2	1	P219	-9.607	11.156	-2.7	-2.282	-.549	.094	1.821	.032
3	1	P303	9.539	-11.579	-2.691	-2.207	-.532	.123	1.662	.372
4	1	P226	-9.539	-11.579	-2.691	-2.207	.532	.123	1.662	-.372
5	1	P345	9.393	-11.02	-2.682	-2.159	-.536	.254	1.256	.255
6	1	P268	-9.393	-11.02	-2.682	-2.159	.536	.254	1.256	-.255
7	1	P338	9.358	11.383	-2.672	-2.099	.522	.251	1.306	-.05
8	1	P261	-9.358	11.383	-2.672	-2.099	-.522	.251	1.306	.05
9	1	P603	-6.592	5.518	-2.318	-.657	-.023	-.201	.929	.264
10	1	P588	6.592	5.518	-2.318	-.657	.023	-.201	.929	-.264

RISA

Company : Delta Engineers,Inc
Designer : YL
Job Number : 2017.478.001
Model Name : Reinforced Wall 50ft - 24 SF Blocks

Nov 16, 2017
10:46 AM
Checked By:_____

Plate Forces (per ft) (By Combination)

REAR FACE. MAX. Qux

	LC	Plate Label	Qx[k]	Qy[k]	Mx[k-ft]	My[k-ft]	Mxy[k-ft]	Fx[k]	Fy[k]	Fxy[k]
1	1	P219	-9.607	11.156	-2.7	-2.282	-.549	.094	1.821	.032
2	1	P226	-9.539	-11.579	-2.691	-2.207	.532	.123	1.662	-.372
3	1	P268	-9.393	-11.02	-2.682	-2.159	.536	.254	1.256	-.255
4	1	P261	-9.358	11.383	-2.672	-2.099	-.522	.251	1.306	.05
5	1	P603	-6.592	5.518	-2.318	-.657	-.023	-.201	.929	.264
6	1	P619	-6.535	-5.691	-2.305	-.649	.031	-.182	.85	-.494
7	1	P715	-6.49	-5.451	-2.3	-.637	.022	-.146	.654	-.47
8	1	P699	-6.444	5.599	-2.286	-.63	-.034	-.158	.678	.316
9	1	P218	-3.793	.593	-1.578	-1.193	-.304	.222	.238	-.16
10	1	P225	-3.754	-.845	-1.582	-1.157	.259	.226	.156	.07

Item 5.

RISA

Company : Delta Engineers,Inc
Designer : YL
Job Number : 2017.478.001
Model Name : Reinforced Wall 50ft - 24 SF Blocks

Nov 16, 2017
11:01 AM
Checked By:_____

Plate Primary Data PLATE THICKNESS

	Label	A Joint	B Joint	C Joint	D Joint	Material	Thickness[in]
210	P216	N260	N261	N269	N268	gen_Conc3NW	8.25
211	P217	N261	N262	N270	N269	gen_Conc3NW	10.06
212	P218	N262	N263	N271	N270	gen_Conc3NW	12.56
213	P219	N263	N264	N272	N271	gen_Conc3NW	14.125
214	P220	N265	N266	N274	N273	gen_Conc3NW	4.5
215	P221	N266	N267	N275	N274	gen_Conc3NW	5.56
216	P222	N267	N268	N276	N275	gen_Conc3NW	6.75
217	P223	N268	N269	N277	N276	gen_Conc3NW	8.25
218	P224	N269	N270	N278	N277	gen_Conc3NW	10.06
219	P225	N270	N271	N279	N278	gen_Conc3NW	12.56
220	P226	N271	N272	N280	N279	gen_Conc3NW	14.125

RISA

Company : Delta Engineers,Inc
Designer : YL
Job Number : 2017.478.001
Model Name : Reinforced Wall 50ft - 24 SF Blocks

Nov 16, 2017
11:02 AM
Checked By:_____

Plate Forces (per ft) (By Combination) WEB MAX. Fux

	LC	Plate Label	Qx[k]	Qy[k]	Mx[k-ft]	My[k-ft]	Mxy[k-ft]	Fx[k]	Fy[k]	Fxy[k]
1	1	P790	.469	.089	.315	.061	.01	11.75	.944	6.797
2	1	P921	-.469	-.089	-.315	-.061	-.01	11.75	.944	6.797
3	1	P845	.471	-.1	.312	.061	-.009	11.732	.931	-6.104
4	1	P976	-.471	.1	-.312	-.061	.009	11.732	.931	-6.104
5	1	P856	.478	.102	.314	.059	.011	11.647	.909	6.564
6	1	P987	-.478	-.102	-.314	-.059	-.011	11.647	.909	6.564
7	1	P779	.477	-.09	.316	.059	-.012	11.607	.931	-5.95
8	1	P910	-.477	.09	-.316	-.059	.012	11.607	.931	-5.95
9	1	P789	.383	.037	.203	.034	0	7.785	-1.294	2.303
10	1	P920	-.383	-.037	-.203	-.034	0	7.785	-1.294	2.303

DELTA
SPECIALTY PRECAST CONCRETE ENGINEERS
860 Hooper Road, Endwell, NY 13760
www.delta-eas.com
Phone: (607) 231-6600
Fax: (607) 231-6650

JOB	2017.478.001		
DESCRIPTION	Gravity Wall - 6-28 Blocks - 6ft		
SHEET NO	OF	SCALE	
CALCULATED BY	YL	DATE	6/8/2017
CHECKED BY		DATE	

Gravity Wall - Maximum 6ft Wall Height
6-28 Blocks

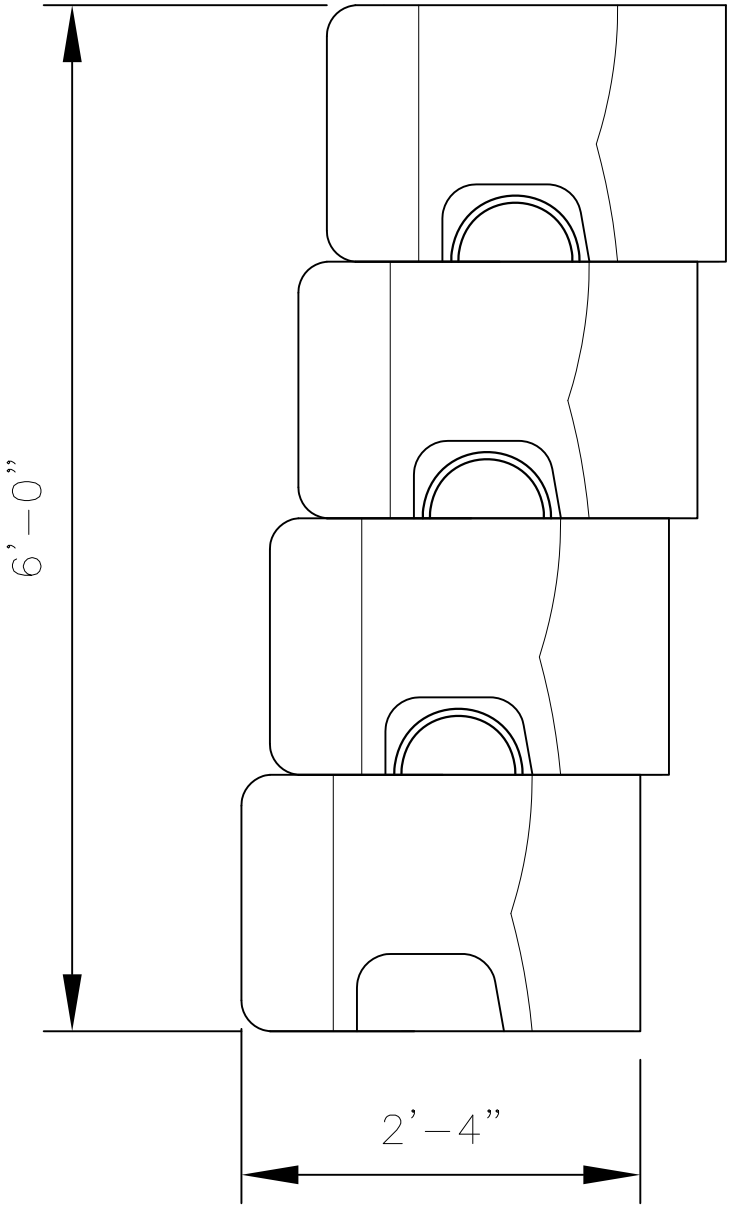

GRAVITY WALL
6-28 UNIT

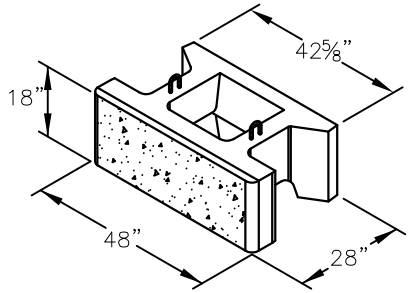

STONE STRONG 6–28 UNIT

NOT TO SCALE

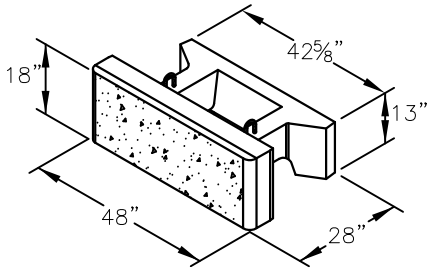

STONE STRONG 6–28 TOP UNIT

NOT TO SCALE

CHECK ON AVAILABILITY OF ALL UNITS w/ LOCAL PRODUCER/ DEALER. SOME UNITS MAY HAVE LIMITED AVAILABILITY.

DISCLAIMER:

These typical details are preliminary and conceptual in nature. They are provided for general information purposes only. Anyone making use of these details and related information does so at their own risk and assumes all liability for such use. Site specific design should be performed by a licensed Professional Engineer based on actual site conditions, materials, and local practices.

Stone Strong LLC retains al common law, statutory, and other reserved rights to these drawings including the copyright. Limited license is granted to copy, reproduce, or modify the details to prepare construction drawings for Stone Strong retaining walls. Stone Strong LLC makes no warranties, either expressed or implied, of merchantability or fitness for any particular purpose, and accepts no responsibility for the accuracy, suitability, or completeness of information contained herein.

Z:\Title Sheets\LOGOS\StoneStrong_Stacked_CMYK.jpg

www.stonestrong.com

PROJECT

COMPONENTS
STONE STRONG SYSTEMS

DATE: 3/15/16 | FILE: 16_Block.6–28

DELTA
SPECIALTY PRECAST CONCRETE ENGINEERS
860 Hooper Road, Endwell, NY 13760
www.delta-eas.com
Phone: (607) 231-6600
Fax: (607) 231-6650

JOB	2017.478.001		
DESCRIPTION	Gravity Wall - 6-28 Blocks - 6ft		
SHEET NO.	OF	SCALE	
CALCULATED BY	YL	DATE	6/8/2017
CHECKED BY		DATE	

Load Calculations - 6-28 Blocks - 6' Wall Height

Internal Pressure from Infill

Infill Density =	100	pcf
ko =	0.5	
Height to Middle of Bottom Block =	5.25	ft
Internal Pressure (at rest) =	262.5	psf

External Pressure from Retained Soil

Soil Density =	120	pcf
ka =	0.33	
Height to Middle of Bottom Block =	5.25	ft
External Pressure (at rest) =	208	psf

Live Load Surcharge =	80	psf

DELTA
SPECIALTY PRECAST CONCRETE ENGINEERS
860 Hooper Road, Endwell, NY 13760
www.delta-eas.com
Phone: (607) 231-6600
Fax: (607) 231-6650

JOB	2017.478.001		
DESCRIPTION	Gravity Wall - 6-28 Blocks - 6ft		
SHEET NO.	OF	SCALE	
CALCULATED BY	YL	DATE	6/8/2017
CHECKED BY		DATE	

Risa Results - 6-28 Blocks - 6' Wall Height

fc' = 5000 psi
5*√f'c = 354 psi

Front Face:

-Mu =	0.06	k-ft/ft	
Thickness t =	6	in	
S = 12 t^2/6=	72	in^3	
ϕMn =0.6* 5*√f'c S =	1.27	k-ft/ft	OK
+Mu =	0.08	k-ft/ft	
Thickness t =	7.01	in	
S = 12 t^2/6=	98	in^3	
ϕMn =0.6* 5*√f'c S =	1.74	k-ft/ft	OK
Vu =	0.60	k/ft	
Thickness t =	6	in	
ϕVn =0.6* 4/3*√f'c *12 t =	4.07	k-ft/ft	OK

Front Face Reinforcing required for temperature and shrinkage only.

Rear Face:

Bending moment and shear are negaligle due to balancing of infill pressure and retained soil pressure.

Rear Face Reinforcing required for temperature and shrinkage only.

Web

Tu =	1.39	k/ft	
Thickness t =	5	in	
ϕTn =0.6*5*√f'c *12 t =	12.73	k/ft	OK

Web Reinforcing required for temperature and shrinkage only.

DELTA
SPECIALTY PRECAST CONCRETE ENGINEERS
860 Hooper Road, Endwell, NY 13760
www.delta-eas.com
Phone: (607) 231-6600
Fax: (607) 231-6650

JOB	2017.478.001		
DESCRIPTION	Stonestrong Retaining Wall 6-28 Blocks		
SHEET NO		OF	SCALE
CALCULATED BY	YL	DATE	6/8/2017
CHECKED BY		DATE	

Temperature and Shrinkage Reinforcing (AASHTO LRFD 5.10.8)

fy = 60 ksi

$$As = \frac{1.30\,bh}{2(b + h)Fy}$$

0.11<= As <= 0.6

b =	18	in	Least Width of Component Section
h =	6	in	Least Thickness of Component Section

As = 0.11 in^2/ft

Provide W4xW4 - 4x4 Wire Mesh in front face, webs and rear face.

Bend web mesh into front face to form a standard hook.

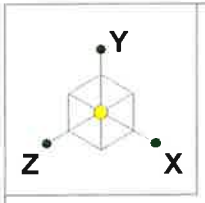

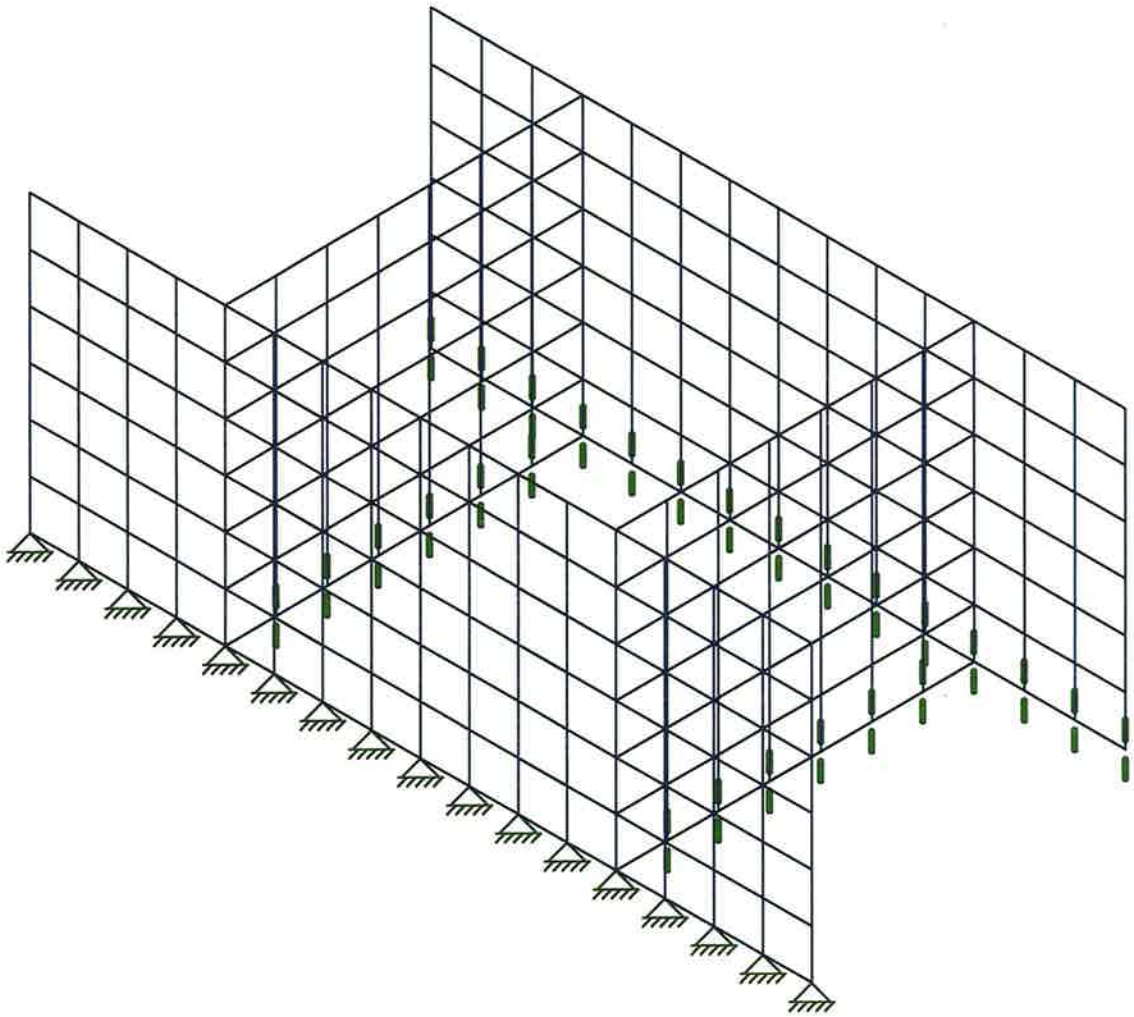

Delta Engineers,Inc	Gravity Wall 6ft 6-28 Blocks	SK - 1
YL		Nov 20, 2017 at 1:55 PM
2017.478.001		6-28 Block_6ft Wall.r3d

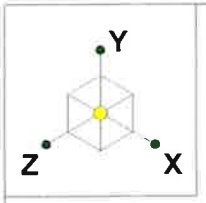

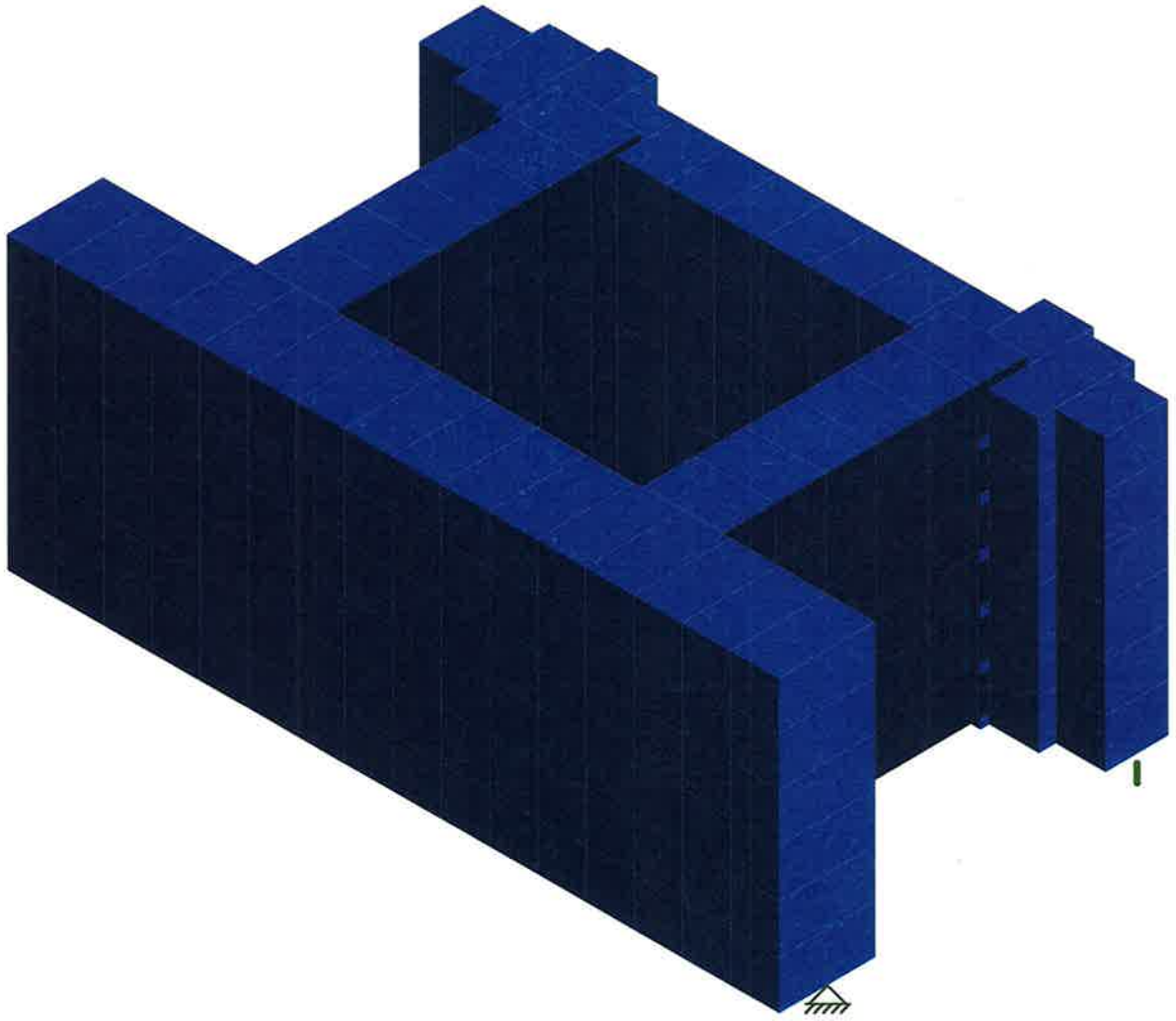

Delta Engineers,Inc	Gravity Wall 6ft 6-28 Blocks	SK - 2
YL		Nov 20, 2017 at 1:55 PM
2017.478.001		6-28 Block_6ft Wall.r3d

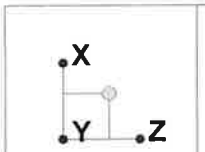

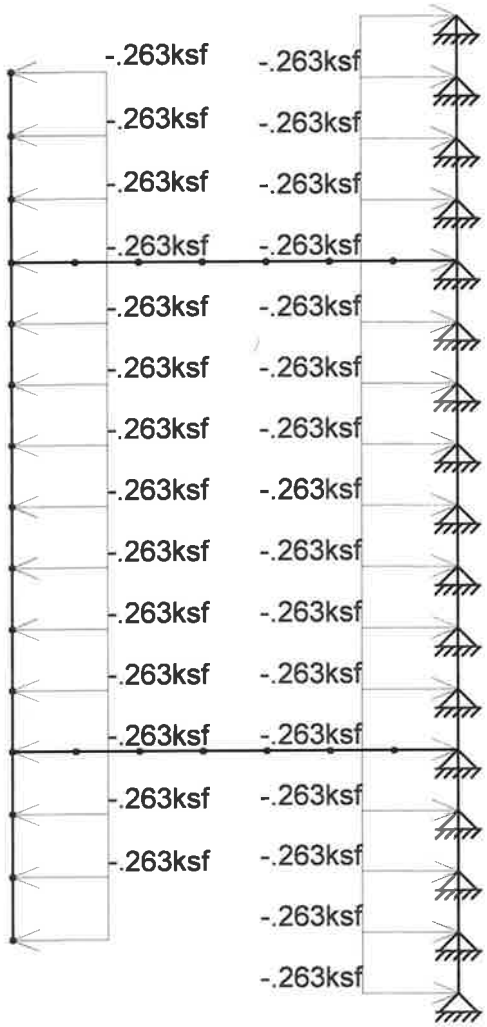

INTERNAL PRESSURE

Loads: BLC 1, EH-rest

Delta Engineers,Inc	Gravity Wall 6ft 6-28 Blocks	SK - 3
YL		Nov 20, 2017 at 1:56 PM
2017.478.001		6-28 Block_6ft Wall.r3d

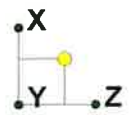

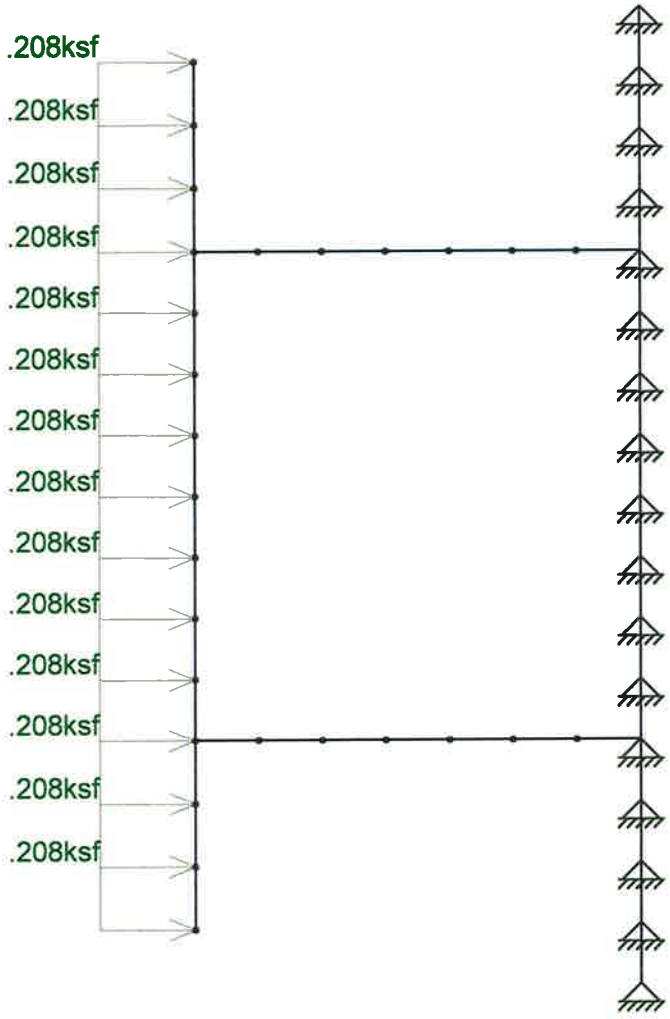

EXTERNAL PRESSURE

Loads: BLC 2, EH-active

Delta Engineers,Inc	Gravity Wall 6ft 6-28 Blocks	SK - 4
YL		Nov 20, 2017 at 1:56 PM
2017.478.001		6-28 Block_6ft Wall.r3d

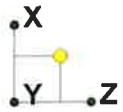

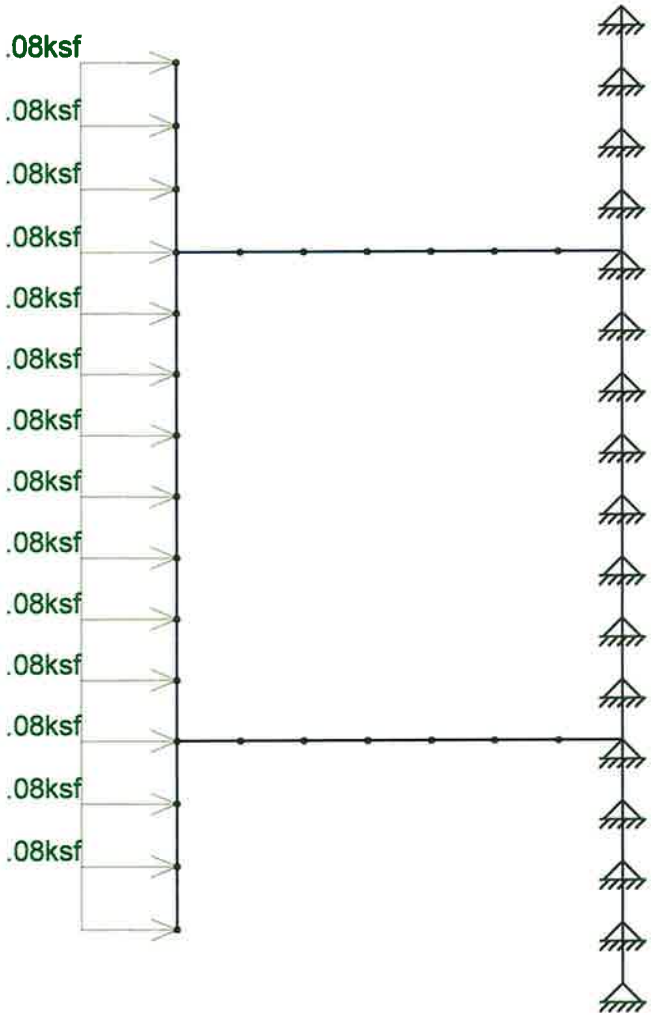

LIVE LOAD SURCHARGE

Loads: BLC 3, LS

Delta Engineers,Inc	Gravity Wall 6ft 6-28 Blocks	SK - 5
YL		Nov 20, 2017 at 1:57 PM
2017.478.001		6-28 Block_6ft Wall.r3d

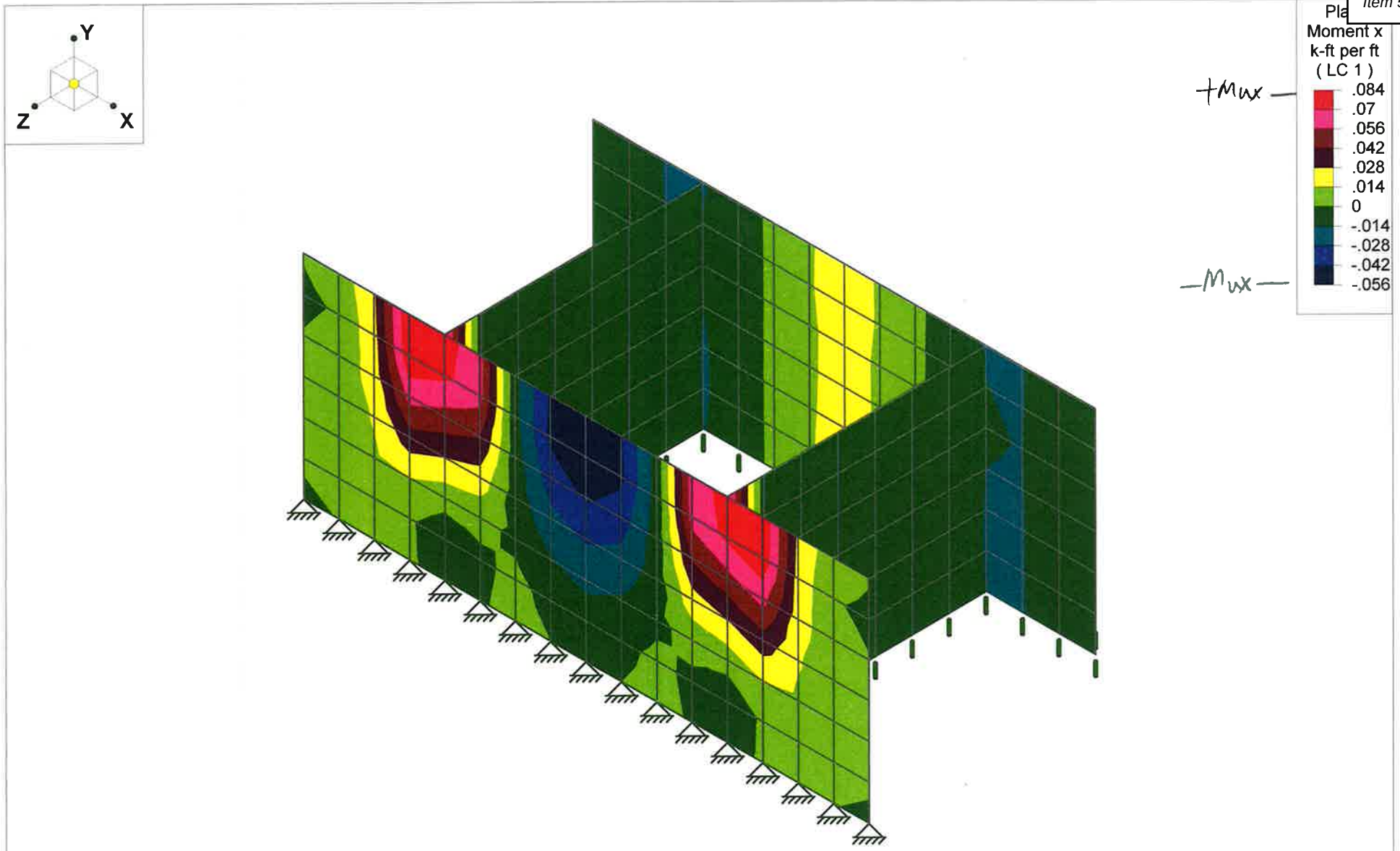

Results for LC 1, 1.35EH-at rest +1.5EH - active + 1.75LS

Delta Engineers,Inc	Gravity Wall 6ft 6-28 Blocks	SK - 6
YL		Nov 20, 2017 at 1:58 PM
2017.478.001		6-28 Block_6ft Wall.r3d

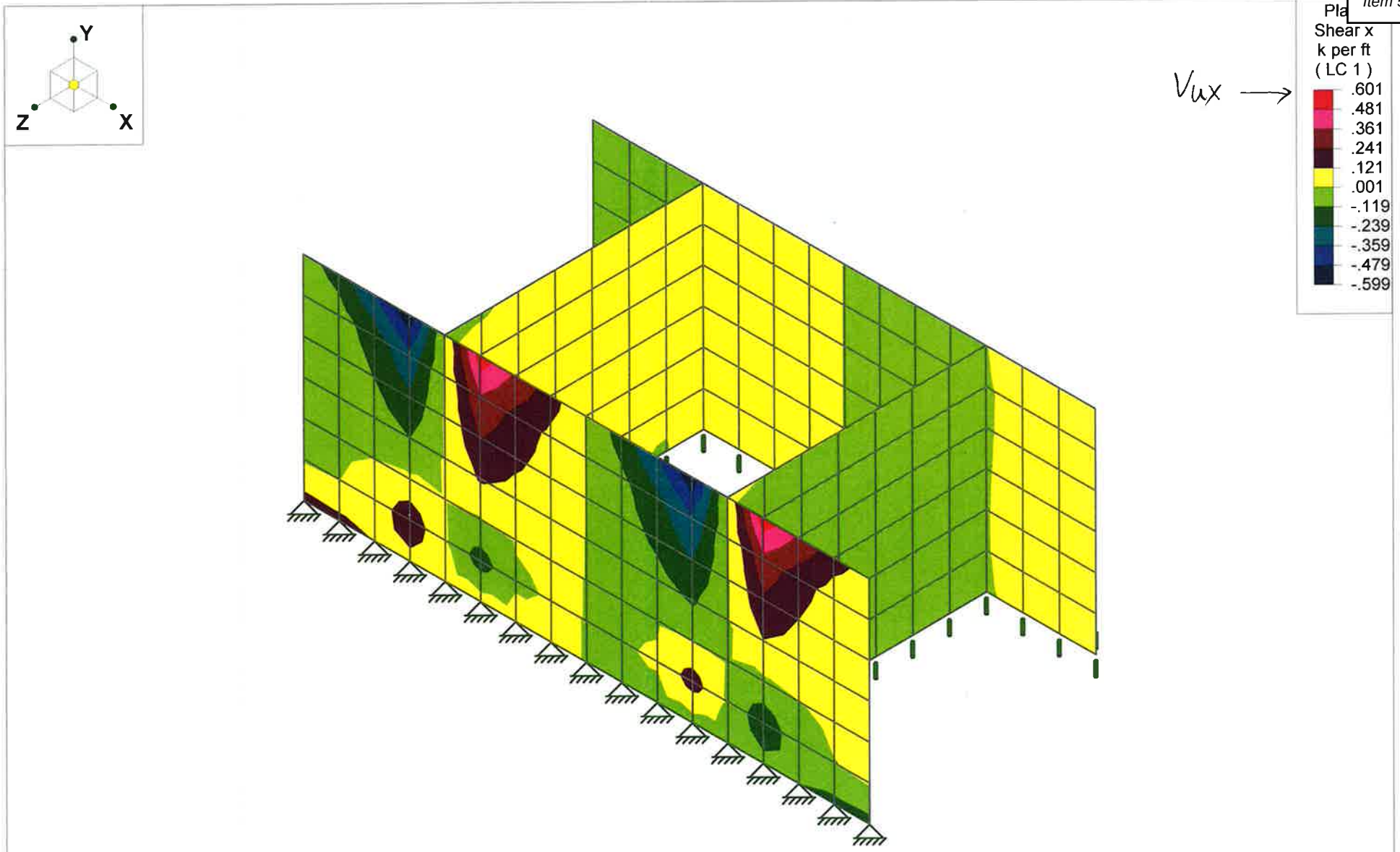

Results for LC 1, 1.35EH-at rest +1.5EH - active + 1.75LS

Delta Engineers,Inc	Gravity Wall 6ft 6-28 Blocks	SK - 7
YL		Nov 20, 2017 at 1:58 PM
2017.478.001		6-28 Block_6ft Wall.r3d

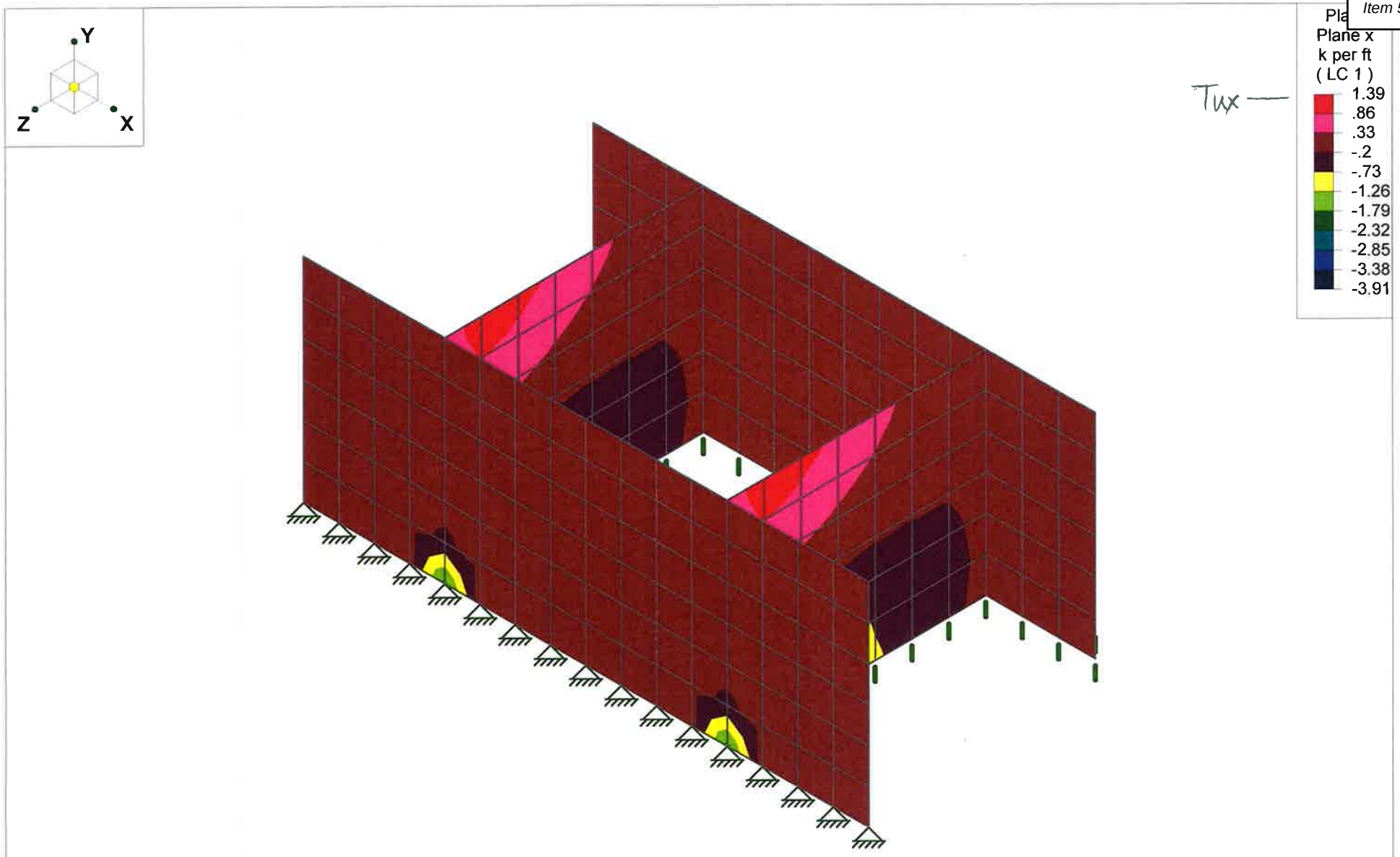

Results for LC 1, 1.35EH-at rest +1.5EH - active + 1.75LS

Delta Engineers,Inc	Gravity Wall 6ft 6-28 Blocks	SK - 8
YL		Nov 20, 2017 at 1:59 PM
2017.478.001		6-28 Block_6ft Wall.r3d

RISA

Company : Delta Engineers,Inc
Designer : YL
Job Number : 2017.478.001
Model Name : Gravity Wall 6ft 6-28 Blocks

Nov 20, 2017
1:59 PM
Checked By:_____

Basic Load Cases

	BLC Description	Category	X Gravity	Y Gravity	Z Gravity	Joint	Point	Distributed	Area(Me...	Surface(...
1	EH-rest	None								180
2	EH-active	None								84
3	LS	None								84

Load Combinations

	Description	S...	P...	S...	B...	Factor	B...	Fa...	B...	Fa...	B...	Fa...	B...	Fa...	B...	Fa...	B...	Fa...	B...	Fa...	B...	Fa...	B...	Fa...
1	1.35EH-at rest +1.5EH - active + ...	Yes			1	1.35	2	1.5	3	1.75														
2	EH-at rest +EH - active +LS	Yes			1	1	2	1	3	1														

DELTA
SPECIALTY PRECAST CONCRETE ENGINEERS
860 Hooper Road, Endwell, NY 13760
www.delta-eas.com
Phone: (607) 231-6600
Fax: (607) 231-6650

JOB	2017.478.001		
DESCRIPTION	Reinforced Wall - 6-28 Blocks -50ft		
SHEET NO.	OF	SCALE	
CALCULATED BY	YL	DATE	6/8/2017
CHECKED BY		DATE	

Reinforce Wall - Maximum 50ft Wall Height
6-28 Blocks

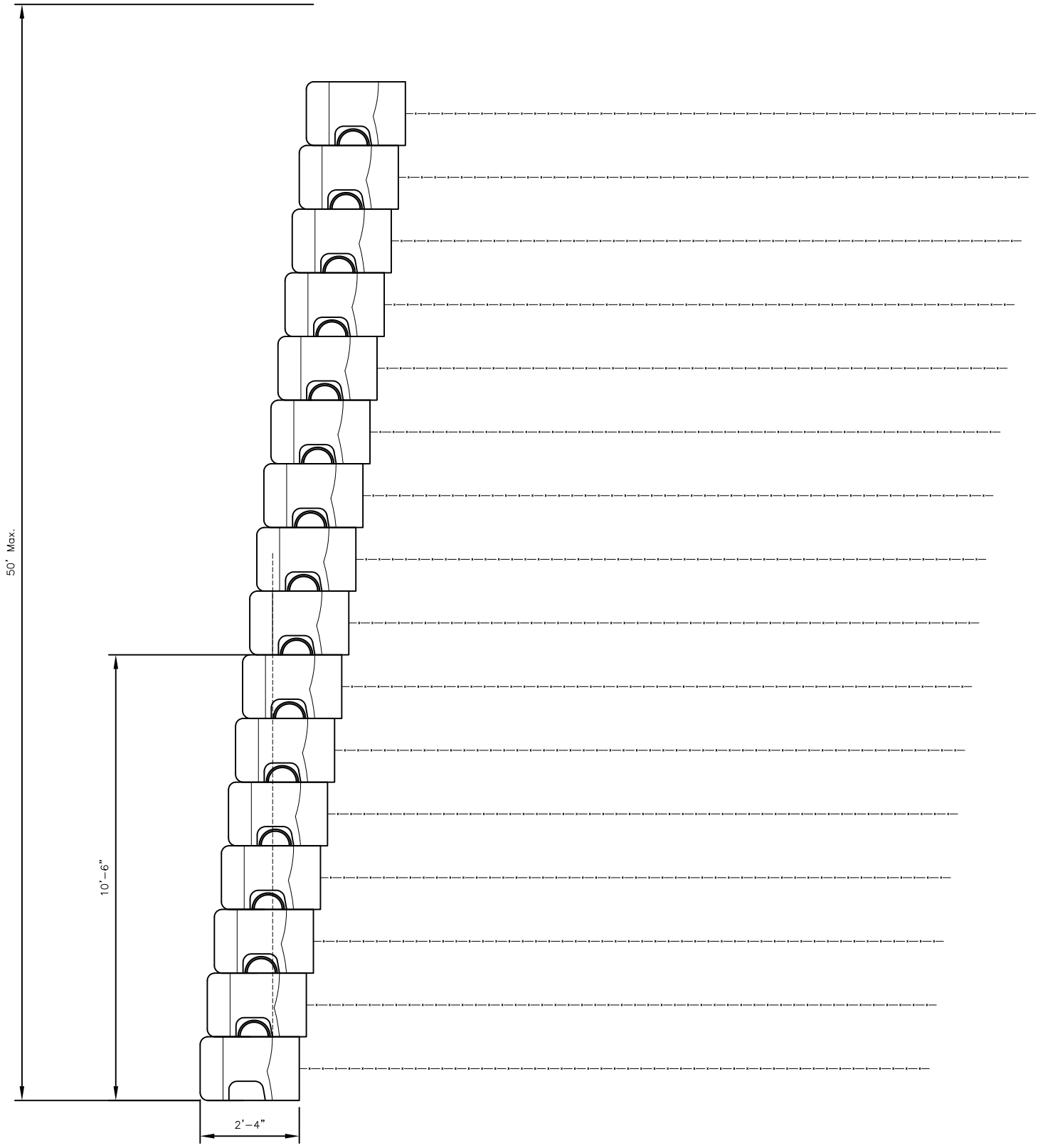

REINFORCED WALL – 50' MAX.
6–28 UNIT

Item 5.

DELTA
SPECIALTY PRECAST CONCRETE ENGINEERS
860 Hooper Road, Endwell, NY 13760
www.delta-eas.com
Phone: (607) 231-6600
Fax: (607) 231-6650

JOB	2017.478.001
DESCRIPTION	Reinforced Wall - 6-28 Blocks -50ft
SHEET NO.	OF SCALE
CALCULATED BY	YL DATE 12/1/2017
CHECKED BY	DATE

Load Calculations - 6-28 Blocks - 50' Wall Height

Internal Pressure from Infill

Infill Density =	100	pcf
ko =	0.5	
Height to Middle of Bottom Block =	9.75	ft
Internal Pressure (at rest) =	487.5	psf

External Pressure from Retained Soil

Soil Density =	120	pcf
ka =	0.33	
Height to Middle of Bottom Block =	49.25	ft
External Pressure (at rest) =	1950	psf
Live Load Surcharge =	0	psf

Item 5.

DELTA
SPECIALTY PRECAST CONCRETE ENGINEERS
860 Hooper Road, Endwell, NY 13760
www.delta-eas.com
Phone: (607) 231-6600
Fax: (607) 231-6650

JOB 2017.478.001
DESCRIPTION Reinforced Wall - 6-28 Blocks -50ft
SHEET NO. ____ OF ____ SCALE ____
CALCULATED BY YL DATE 12/1/2017
CHECKED BY ____ DATE ____

Risa Results - 6-28 Blocks - 50' Wall Height

fc' = 5000 psi
5*√f'c = 354 psi

Front Face:

-Mu =	0.26	k-ft/ft	
Thickness t =	6	in	
S = 12 t²/6=	72	in³	
ϕMn =0.6* 5*√f'c S =	1.27	k-ft/ft	OK
+Mu =	0.03	k-ft/ft	
Thickness t =	7.01	in	
S = 12 t²/6=	98	in³	
ϕMn =0.6* 5*√f'c S =	1.74	k-ft/ft	OK
Vu =	0.59	k/ft	
Thickness t =	6	in	
ϕVn =0.6* 4/3*√f'c *12 t =	4.07	k-ft/ft	OK

Front Face Reinforcing required for temperature and shrinkage only.

Rear Face:

-Mu =	0.63	k-ft/ft	
Thickness t =	6.97	in	
S = 12 t²/6=	97	in³	
ϕMn =0.6* 5*√f'c S =	1.72	k-ft/ft	OK
+Mu =	0.38	k-ft/ft	
Thickness t =	4	in	
S = 12 t²/6=	32	in³	
ϕMn =0.6* 5*√f'c S =	0.57	k-ft/ft	OK
Vu =	3.51	k/ft	
Thickness t =	6.97	in	
ϕVn =0.6* 4/3*√f'c *12 t =	4.73	k-ft/ft	OK

Rear Face Reinforcing required for temperature and shrinkage only.

Item 5.

DELTA
SPECIALTY PRECAST CONCRETE ENGINEERS
860 Hooper Road, Endwell, NY 13760
www.delta-eas.com
Phone: (607) 231-6600
Fax: (607) 231-6650

JOB	2017.478.001		
DESCRIPTION	Reinforced Wall - 6-28 Blocks -50ft		
SHEET NO.		OF	SCALE
CALCULATED BY	YL	DATE	12/1/2017
CHECKED BY		DATE	

Risa Results - 6-28 Blocks - 50' Wall Height

Web

fc' = 5000 psi

5*vf'c = 354 psi

Tu = 9.47 k/ft

Thickness t = 5 in

ϕTn =0.6*5*√f'c *12 t = 12.73 k/ft OK

Web Reinforcing required for temperature and shrinkage only.

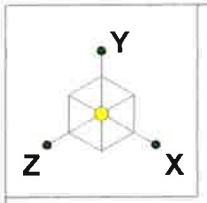

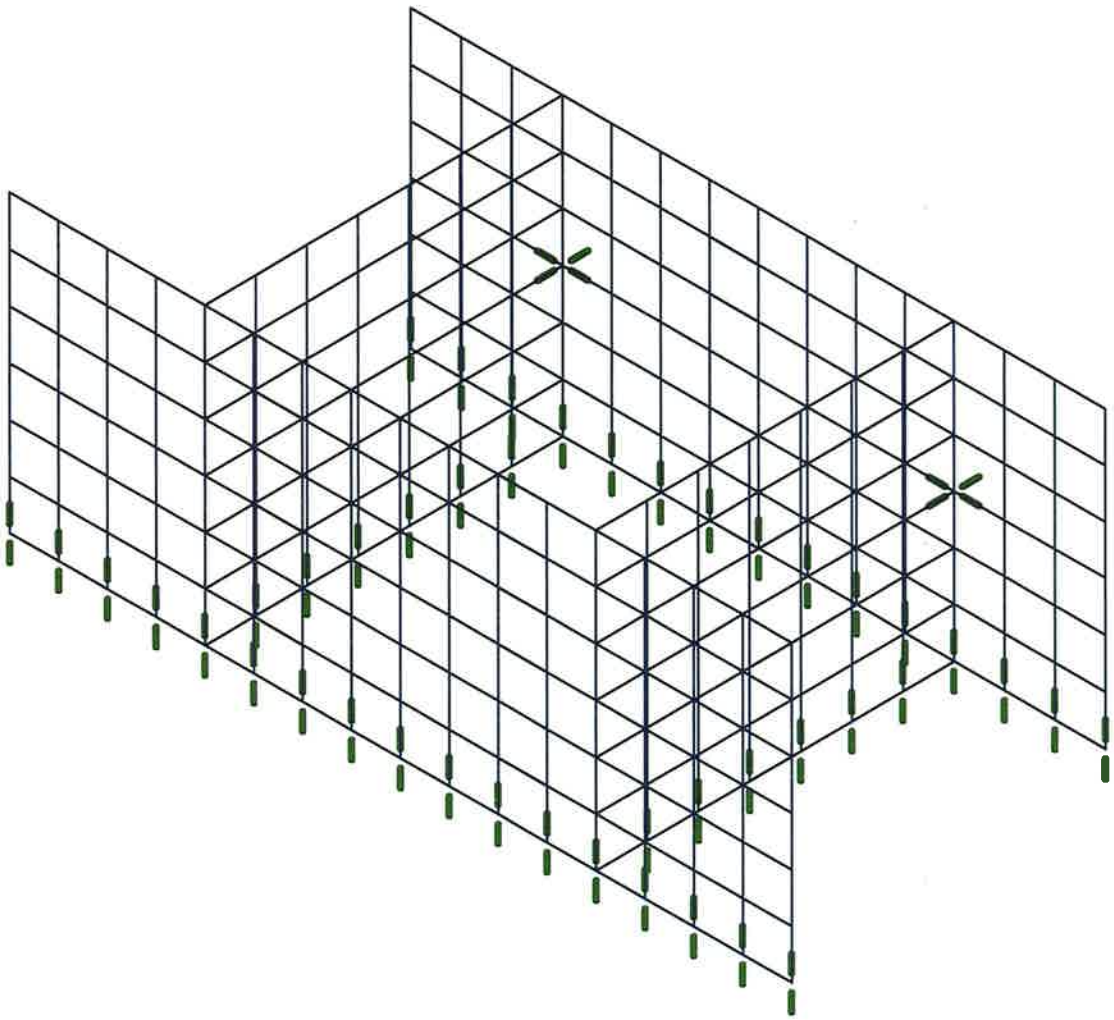

Delta Engineers,Inc	Reinforced Wall 50ft 6-28 Blocks	SK - 1
YL		Nov 20, 2017 at 2:45 PM
2017.478.001		6-28 Block_50ft Wall.r3d

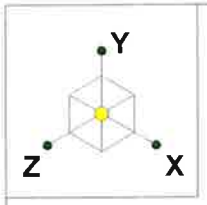

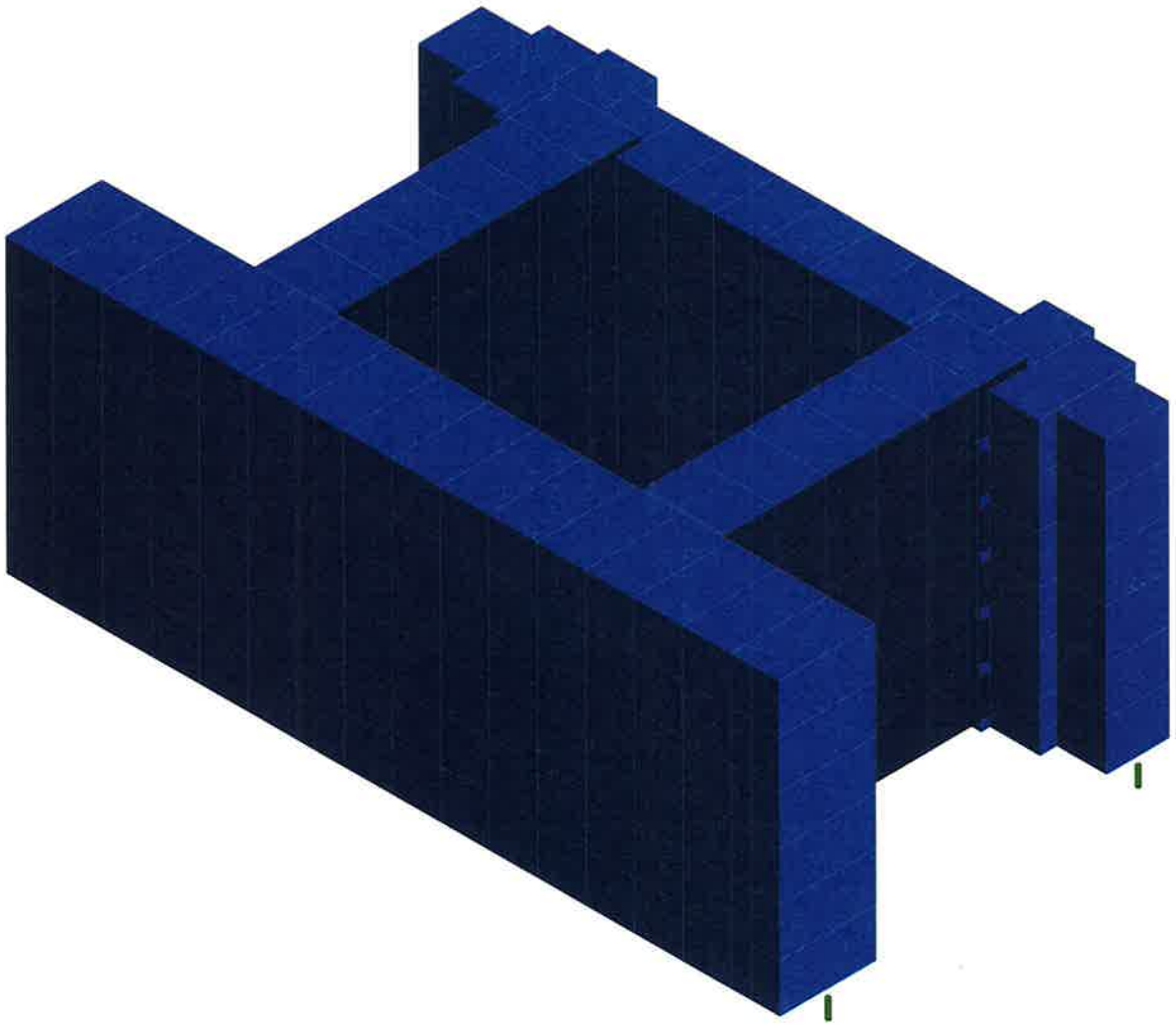

Delta Engineers,Inc	Reinforced Wall 50ft 6-28 Blocks	SK - 2
YL		Nov 20, 2017 at 2:45 PM
2017.478.001		6-28 Block_50ft Wall.r3d

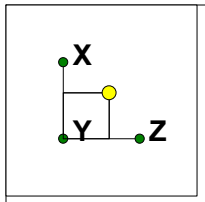

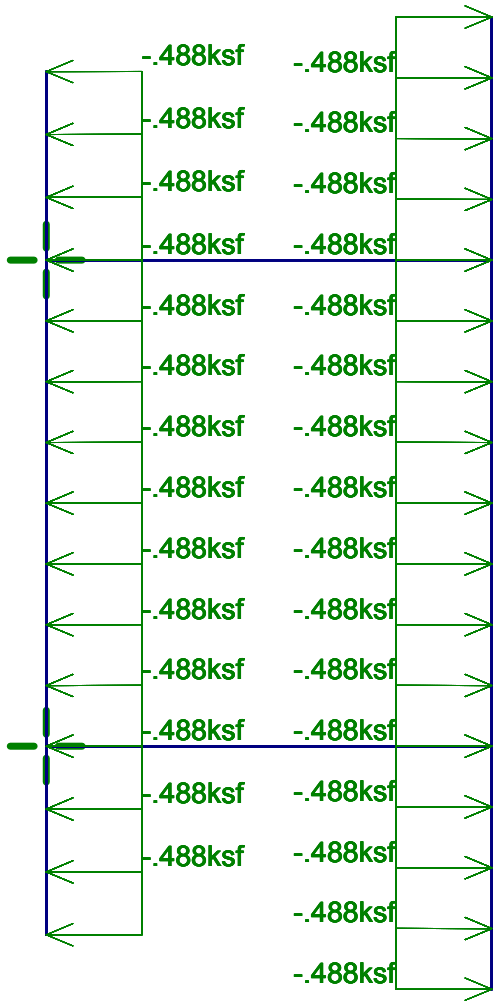

Internal Pressure

Loads: BLC 1, EH-rest

Delta Engineers,Inc		SK - 3
YL	Reinforced Wall 50ft 6-28 Blocks	Dec 1, 2017 at 8:59 AM
2017.478.001		6-28 Block_50ft Wall.r3d

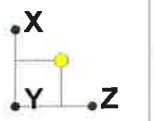

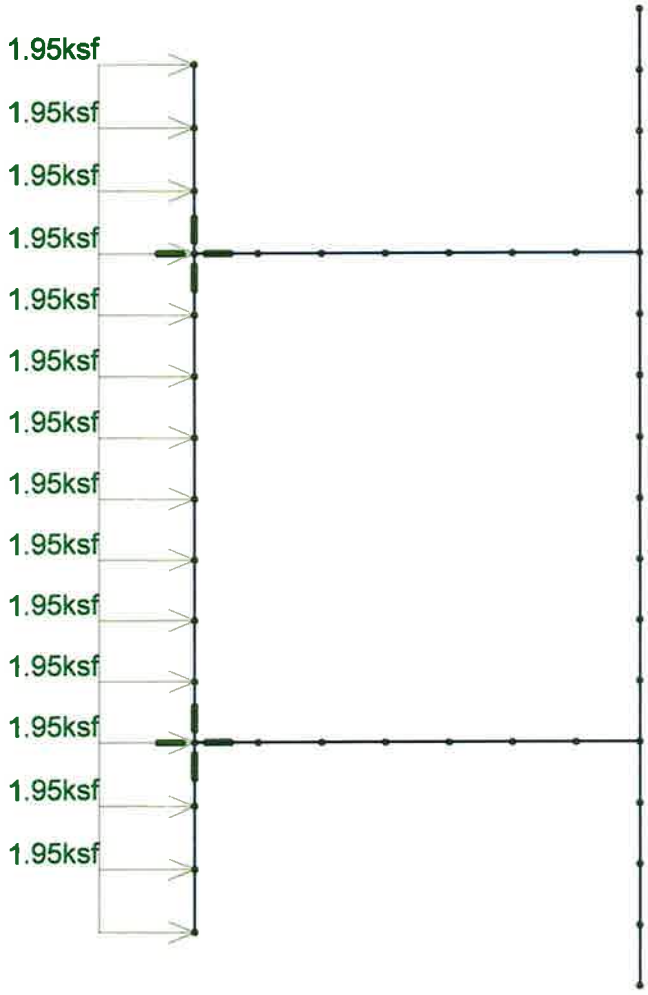

External Pressure

Loads: BLC 2, EH-active

Delta Engineers,Inc	Reinforced Wall 50ft 6-28 Blocks	SK - 4
YL		Nov 20, 2017 at 2:45 PM
2017.478.001		6-28 Block_50ft Wall.r3d

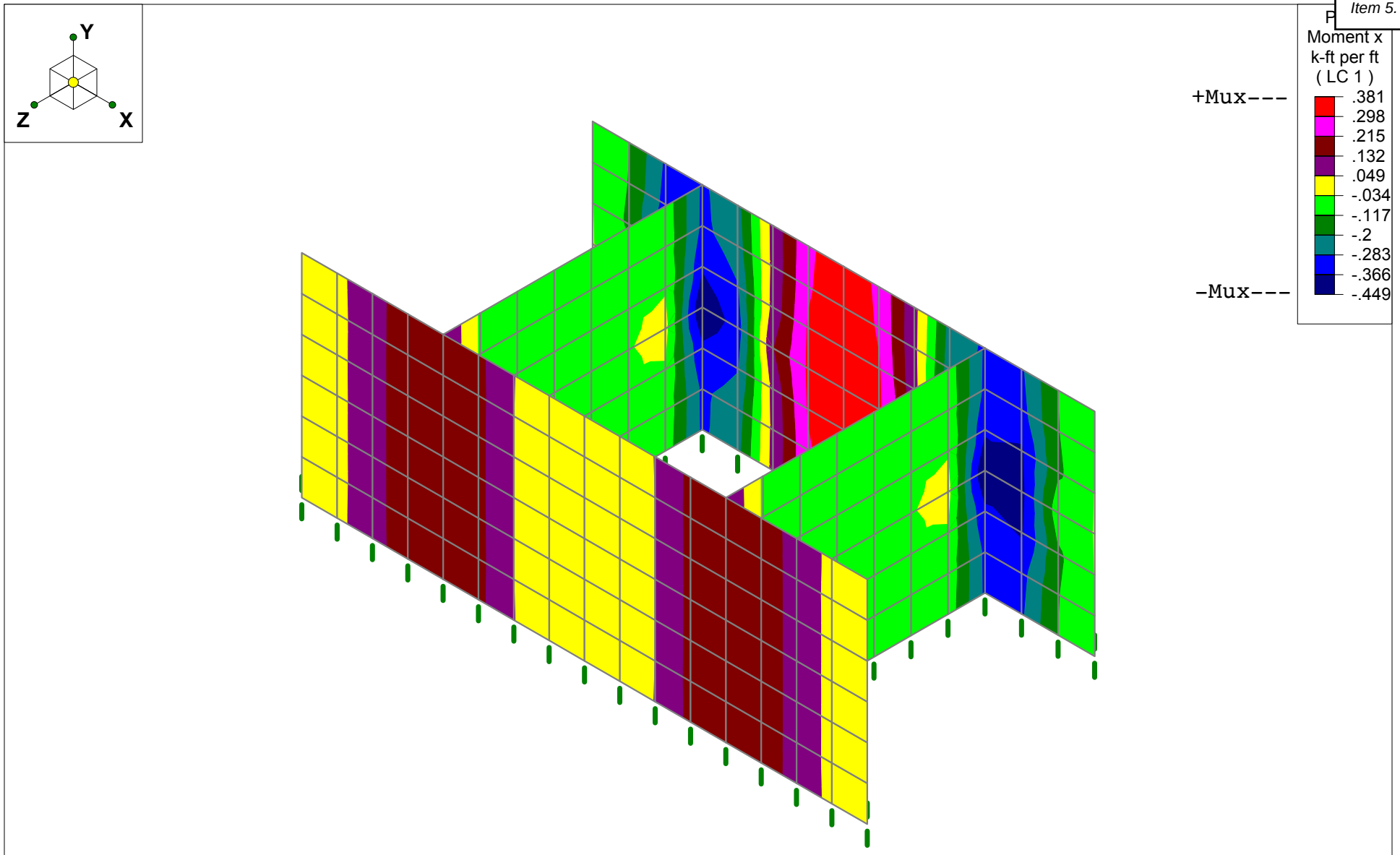

Results for LC 1, 1.35EH-at rest +1.5EH - active + 1.75LS

Delta Engineers,Inc	Reinforced Wall 50ft 6-28 Blocks	SK - 5
YL		Dec 1, 2017 at 9:01 AM
2017.478.001		6-28 Block_50ft Wall.r3d

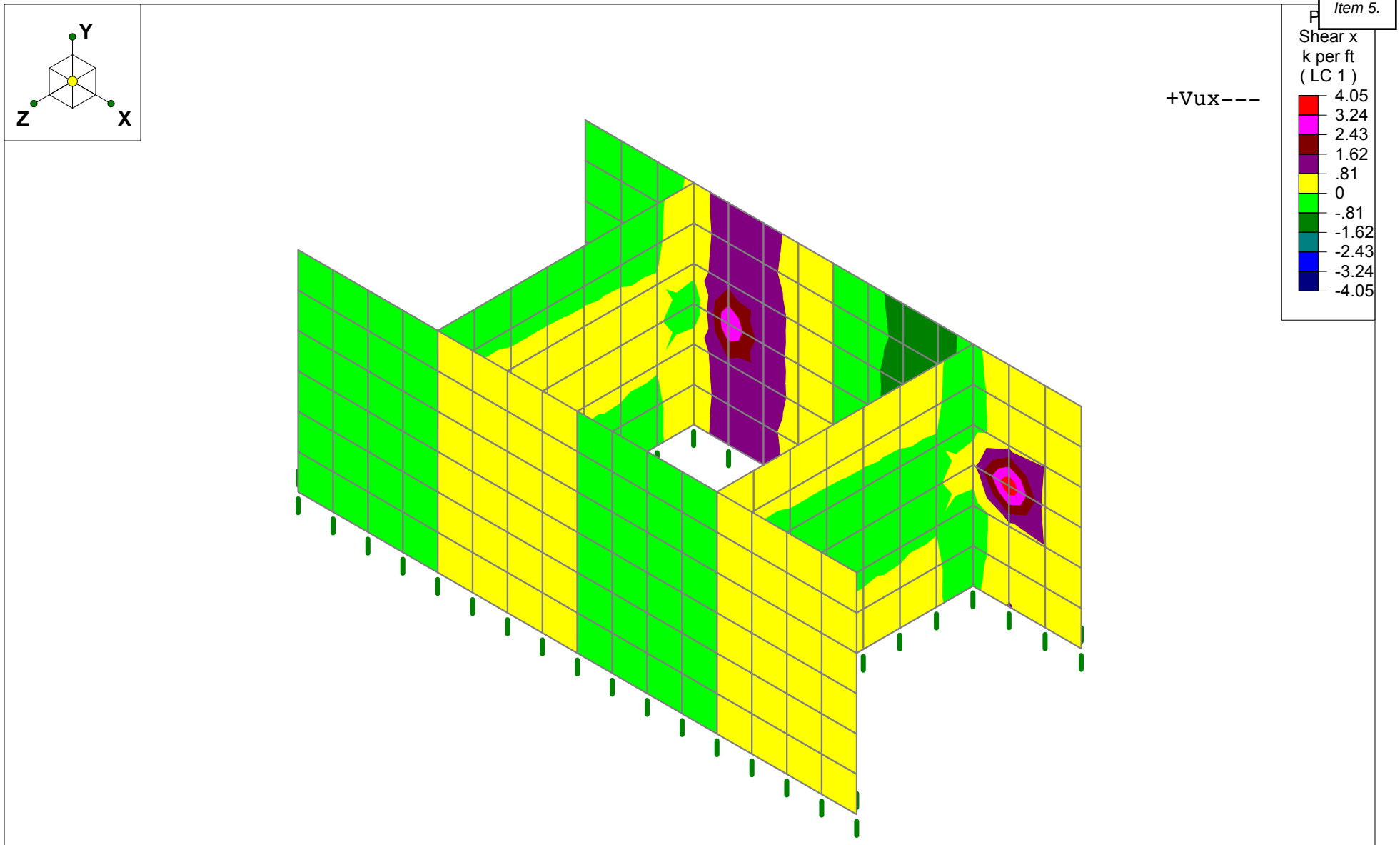

Results for LC 1, 1.35EH-at rest +1.5EH - active + 1.75LS

Delta Engineers,Inc	Reinforced Wall 50ft 6-28 Blocks	SK - 6
YL		Dec 1, 2017 at 9:03 AM
2017.478.001		6-28 Block_50ft Wall.r3d

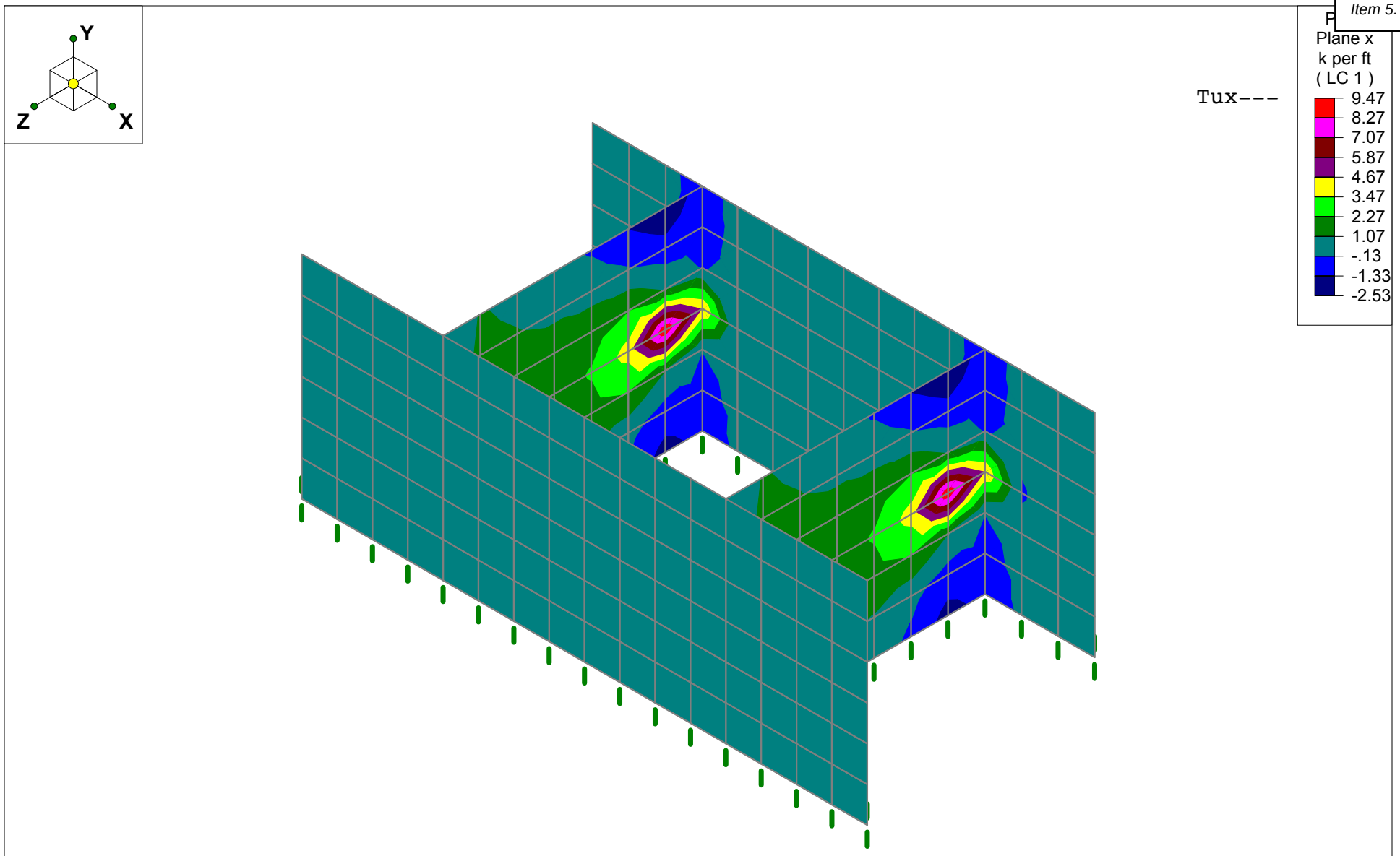

Results for LC 1, 1.35EH-at rest +1.5EH - active + 1.75LS

Delta Engineers,Inc	Reinforced Wall 50ft 6-28 Blocks	SK - 7
YL		Dec 1, 2017 at 9:06 AM
2017.478.001		6-28 Block_50ft Wall.r3d

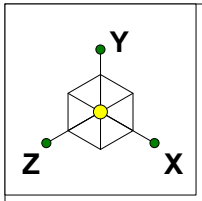

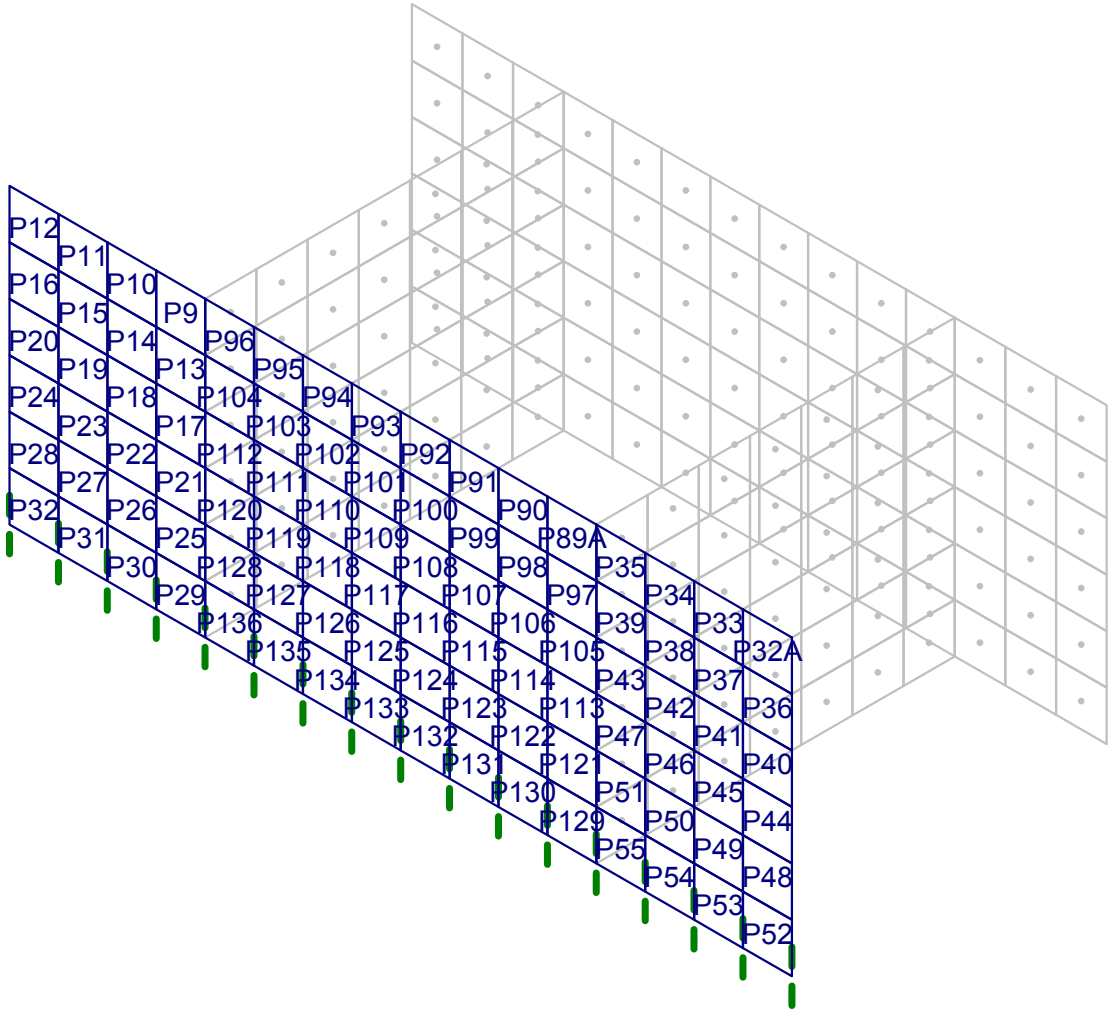

Front Face Plates

Delta Engineers,Inc	Reinforced Wall 50ft 6-28 Blocks	SK - 8
YL		Dec 1, 2017 at 9:35 AM
2017.478.001		6-28 Block_50ft Wall.r3d

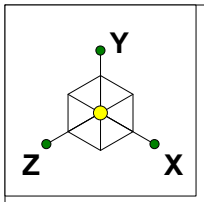

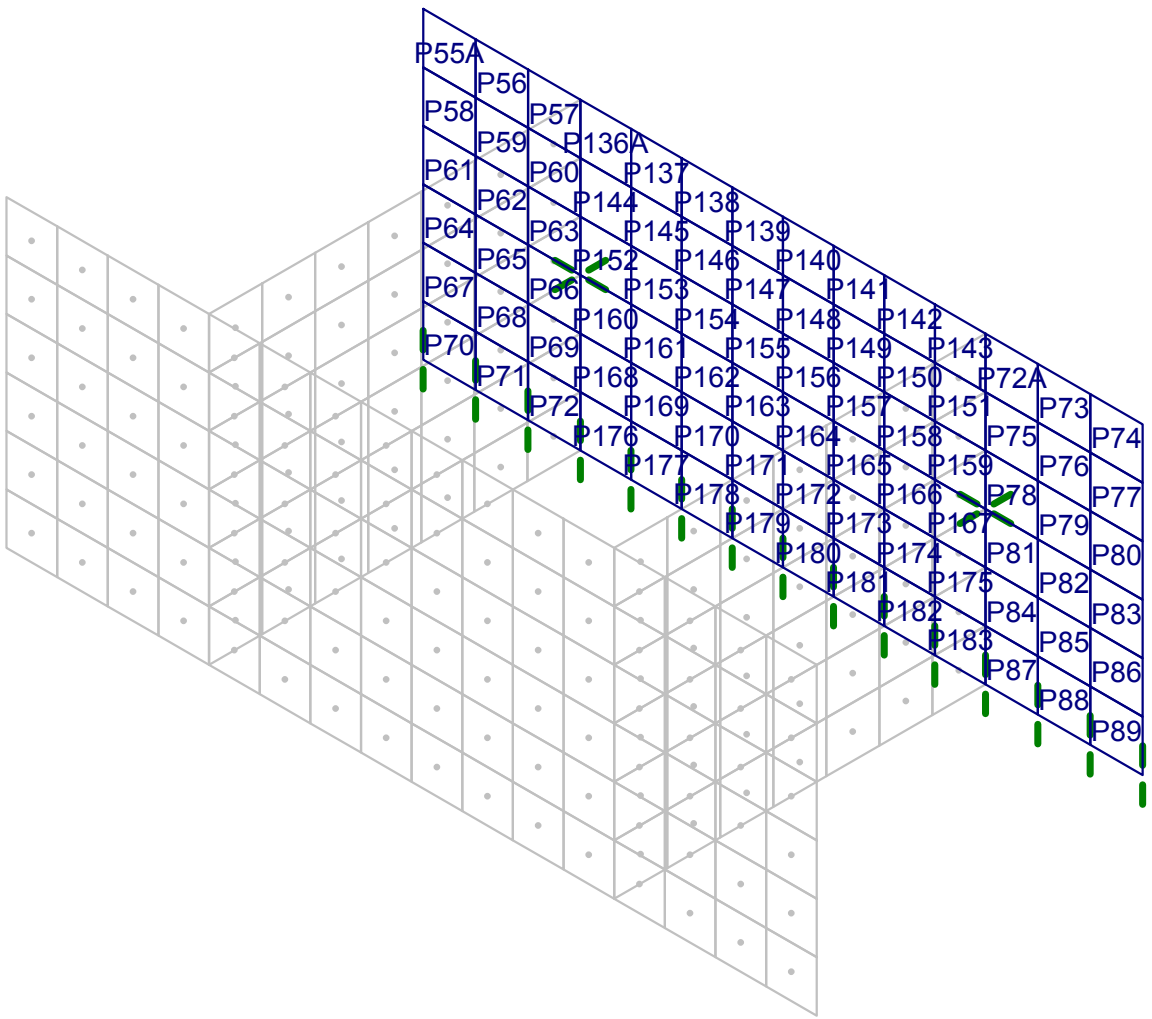

Rear Face Plates

Delta Engineers,Inc	Reinforced Wall 50ft 6-28 Blocks	SK - 9
YL		Dec 1, 2017 at 9:51 AM
2017.478.001		6-28 Block_50ft Wall.r3d

RISA

Company : Delta Engineers,Inc
Designer : YL
Job Number : 2017.478.001
Model Name : Reinforced Wall 50ft 6-28 Blocks

Nov 20, 2017
3:09 PM
Checked By:_____

Basic Load Cases

	BLC Description	Category	X Gravity	Y Gravity	Z Gravity	Joint	Point	Distributed	Area(Me...	Surface(...
1	EH-rest	None								180
2	EH-active	None								84
3	LS	None								

Load Combinations

	Description	S...	P...	S...	B...	Factor	B...	Fa...	B...	Fa...	B...	Fa...	B...	Fa...	B...	Fa...	B...	Fa...	B...	Fa...	B...	Fa...	B...	Fa...
1	1.35EH-at rest +1.5EH - active + ...	Yes			1	1.35	2	1.5	3	1.75														
2	EH-at rest +EH - active +LS	Yes			1	1	2	1	3	1														

Plate Forces (per ft) (By Combination) Front Face Max. +Mux

	LC	Plate Label	Qx[k]	Qy[k]	Mx[k-ft]	My[k-ft]	Mxy[k-ft]	Fx[k]	Fy[k]	Fxy[k]
1	1	P47	.591	0	.259	.026	0	.023	-.086	-.033
2	1	P21	-.591	0	.259	.026	0	.023	-.086	.033
3	1	P51	.587	.024	.259	.021	0	.025	-.1	-.018
4	1	P25	-.587	.024	.259	.021	0	.025	-.1	.018
5	1	P43	.583	-.016	.259	.024	0	.015	-.067	-.044
6	1	P17	-.583	-.016	.259	.024	0	.015	-.067	.044
7	1	P39	.57	-.026	.258	.018	0	0	-.047	-.051
8	1	P13	-.57	-.026	.258	.018	0	0	-.047	.051
9	1	P55	.56	.042	.255	.011	0	.012	-.113	0
10	1	P29	-.56	.042	.255	.011	0	.012	-.113	0

Company : Delta Engineers,Inc
Designer : YL
Job Number : 2017.478.001
Model Name : Reinforced Wall 50ft 6-28 Blocks

Dec 1, 2017
9:38 AM
Checked By:_____

Plate Forces (per ft) (By Combination) Front Face Max. -Mux

	LC	Plate Label	Qx[k]	Qy[k]	Mx[k-ft]	My[k-ft]	Mxy[k-ft]	Fx[k]	Fy[k]	Fxy[k]
1	1	P125	.079	-.011	-.033	-.008	.001	-.008	-.045	0
2	1	P124	-.079	-.011	-.033	-.008	-.001	-.008	-.045	0
3	1	P101	.079	.011	-.033	-.008	-.001	.008	-.009	0
4	1	P100	-.079	.011	-.033	-.008	.001	.008	-.009	0
5	1	P117	.078	-.004	-.033	-.012	0	-.008	-.034	0
6	1	P116	-.078	-.004	-.033	-.012	0	-.008	-.034	0
7	1	P133	.09	-.01	-.032	-.003	.001	0	-.05	0
8	1	P132	-.09	-.01	-.032	-.003	-.001	0	-.05	0
9	1	P109	.078	.003	-.032	-.012	0	0	-.022	0
10	1	P108	-.078	.003	-.032	-.012	0	0	-.022	0

Company : Delta Engineers,Inc
Designer : YL
Job Number : 2017.478.001
Model Name : Reinforced Wall 50ft 6-28 Blocks

Dec 1, 2017
9:48 AM
Checked By:_____

Plate Forces (per ft) (By Combination) Front Face Max. Vux

	LC	Plate Label	Qx[k]	Qy[k]	Mx[k-ft]	My[k-ft]	Mxy[k-ft]	Fx[k]	Fy[k]	Fxy[k]
1	1	P47	.591	0	.259	.026	0	.023	-.086	-.033
2	1	P21	-.591	0	.259	.026	0	.023	-.086	.033
3	1	P51	.587	.024	.259	.021	0	.025	-.1	-.018
4	1	P25	-.587	.024	.259	.021	0	.025	-.1	.018
5	1	P89A	-.585	-.016	.213	.005	.004	-.04	-.032	.045
6	1	P96	.585	-.016	.213	.005	-.004	-.04	-.032	-.045
7	1	P43	.583	-.016	.259	.024	0	.015	-.067	-.044
8	1	P17	-.583	-.016	.259	.024	0	.015	-.067	.044
9	1	P121	-.581	.021	.216	.016	-.002	.017	-.1	.035
10	1	P128	.581	.021	.216	.016	.002	.017	-.1	-.035

Company : Delta Engineers,Inc
Designer : YL
Job Number : 2017.478.001
Model Name : Reinforced Wall 50ft 6-28 Blocks

Dec 1, 2017
9:52 AM
Checked By:_____

Plate Forces (per ft) (By Combination) Rear Face Max. +Mux

	LC	Plate Label	Qx[k]	Qy[k]	Mx[k-ft]	My[k-ft]	Mxy[k-ft]	Fx[k]	Fy[k]	Fxy[k]
1	1	P155	.288	.008	.375	-.016	.002	.079	.031	-.012
2	1	P156	-.288	.008	.375	-.016	-.002	.079	.031	.012
3	1	P163	.288	-.009	.375	-.016	-.002	.069	.056	-.015
4	1	P164	-.288	-.009	.375	-.016	.002	.069	.056	.015
5	1	P148	-.278	.007	.368	-.007	-.004	.039	.01	.007
6	1	P147	.278	.007	.368	-.007	.004	.039	.01	-.007
7	1	P171	.277	-.007	.368	-.006	-.004	.031	.083	-.013
8	1	P172	-.277	-.007	.368	-.006	.004	.031	.083	.013
9	1	P140	-.285	-.004	.361	.001	-.002	-.057	0	0
10	1	P139	.285	-.004	.361	.001	.002	-.057	0	0

Company : Delta Engineers,Inc
Designer : YL
Job Number : 2017.478.001
Model Name : Reinforced Wall 50ft 6-28 Blocks

Dec 1, 2017
9:52 AM
Checked By:_____

Plate Forces (per ft) (By Combination) Rear Face Max. -Mux

	LC	Plate Label	Qx[k]	Qy[k]	Mx[k-ft]	My[k-ft]	Mxy[k-ft]	Fx[k]	Fy[k]	Fxy[k]
1	1	P63	-3.505	4.03	-.628	-.798	-.156	-.15	1.306	.247
2	1	P78	3.505	4.03	-.628	-.798	.156	-.15	1.306	-.247
3	1	P66	-3.478	-4.098	-.625	-.789	.16	-.129	1.195	-.332
4	1	P81	3.478	-4.098	-.625	-.789	-.16	-.129	1.195	.332
5	1	P152	3.083	2.271	-.58	-.238	.016	-.077	.744	-.142
6	1	P159	-3.083	2.271	-.58	-.238	-.016	-.077	.744	.142
7	1	P160	3.069	-2.306	-.579	-.236	-.016	-.06	.68	.19
8	1	P167	-3.069	-2.306	-.579	-.236	.016	-.06	.68	-.19
9	1	P151	-1.287	.551	-.454	-.072	.006	-.041	.149	.301
10	1	P144	1.287	.551	-.454	-.072	-.006	-.041	.149	-.301

Company : Delta Engineers,Inc
Designer : YL
Job Number : 2017.478.001
Model Name : Reinforced Wall 50ft 6-28 Blocks

Dec 1, 2017
9:54 AM
Checked By:_____

Plate Forces (per ft) (By Combination) Rear Face Max. Vux

	LC	Plate Label	Qx[k]	Qy[k]	Mx[k-ft]	My[k-ft]	Mxy[k-ft]	Fx[k]	Fy[k]	Fxy[k]
1	1	P63	-3.505	4.03	-.628	-.798	-.156	-.15	1.306	.247
2	1	P78	3.505	4.03	-.628	-.798	.156	-.15	1.306	-.247
3	1	P66	-3.478	-4.098	-.625	-.789	.16	-.129	1.195	-.332
4	1	P81	3.478	-4.098	-.625	-.789	-.16	-.129	1.195	.332
5	1	P152	3.083	2.271	-.58	-.238	.016	-.077	.744	-.142
6	1	P159	-3.083	2.271	-.58	-.238	-.016	-.077	.744	.142
7	1	P160	3.069	-2.306	-.579	-.236	-.016	-.06	.68	.19
8	1	P167	-3.069	-2.306	-.579	-.236	.016	-.06	.68	-.19
9	1	P176	1.613	-.023	-.413	-.032	.013	.111	-.335	.128
10	1	P183	-1.613	-.023	-.413	-.032	-.013	.111	-.335	-.128

DELTA
SPECIALTY PRECAST CONCRETE ENGINEERS
860 Hooper Road, Endwell, NY 13760
www.delta-eas.com
Phone: (607) 231-6600
Fax: (607) 231-6650

JOB	2017.478.001		
DESCRIPTION	Stonestrong Retaining Wall		
SHEET NO		OF	SCALE
CALCULATED BY	YL	DATE	6/8/2017
CHECKED BY		DATE	

Handling Analysis

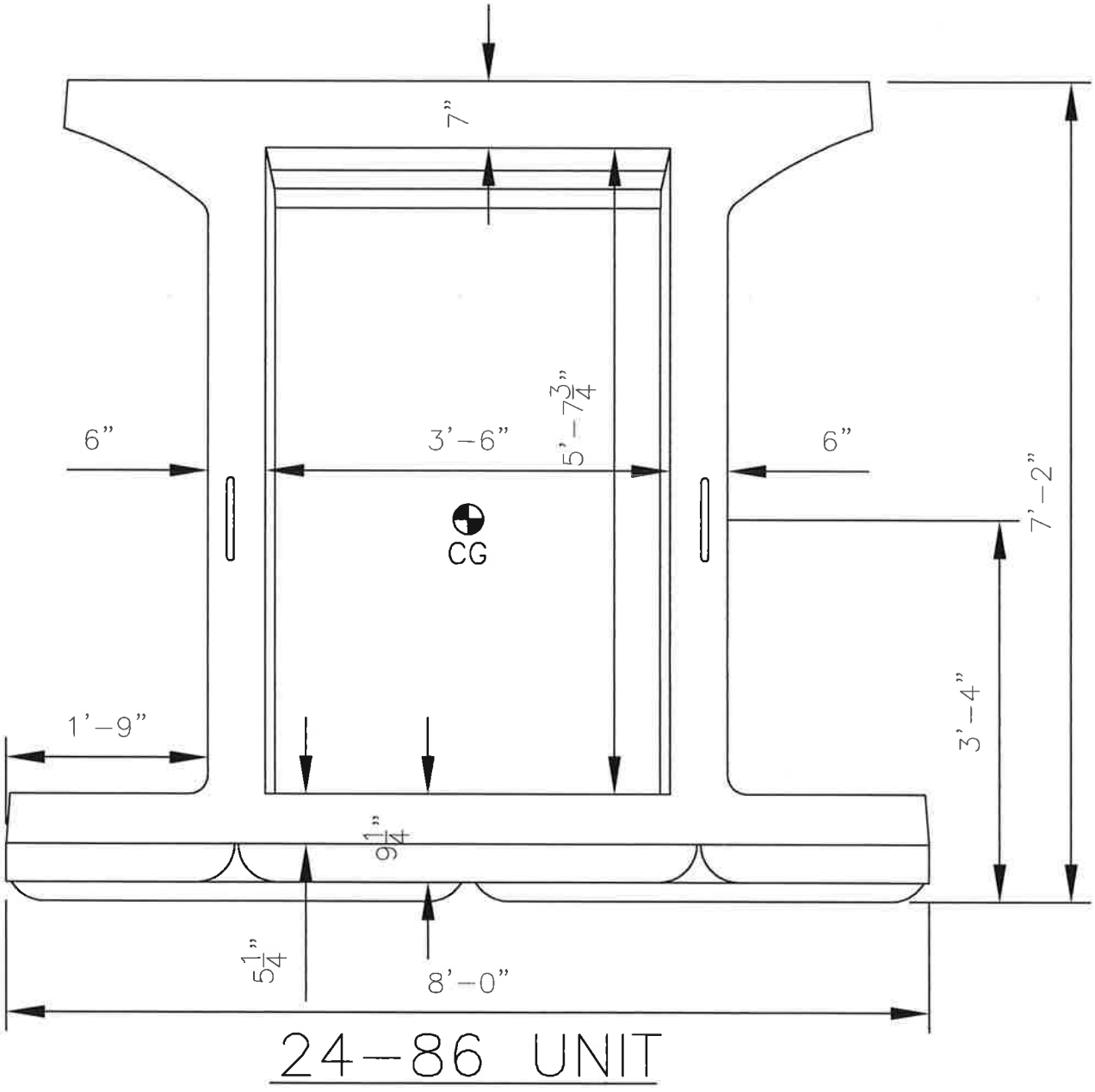

24–86 UNIT

STONE STRONG systems

Block Library

10/31/2013

Unit Type	Unit Description (check unit availability - see Note)	Conc. Wt. (lbs)	Void Vol (ft^3)	Length (ft)	Height (ft)	Unit Width (in)	Lift (in)	Align (in)	x_c (in)	x_v (in)	Special Top
6	6SF unit (6 square feet)	1,600	10.75	4	1.50	44	19.0	17.0	21.0	23.5	
24	24SF unit (24 square feet)	6,000	43.74	8	3.00	44	21.0	17.0	21.2	24.8	
24-ME	24SF Mass Extender unit	10,000	45.45	8	3.00	56	21.0	17.0	32.7	25.8	
24-M6	24SF w/ 6" Mass Extender	8,000	44.35	8	3.00	50	21.0	17.0	38.5	25.3	
24-M18	24SF w/ 18" Mass Extender	12,000	45.56	8	3.00	62	21.0	17.0	50.0	26.5	
24-M24	24SF w/ 24" Mass Extender	14,000	46.16	8	3.00	68	21.0	17.0	44.2	26.1	
24-62	24-62 unit (24 square feet)	6,855	75.87	8	3.00	62	21.0	17.0	29.1	33.0	
24-86	24-86 unit (24 square feet)	7,693	115.07	8	3.00	86	21.0	17.0	40.0	45.1	
Alternate top units (not typically used - regular 24SF top unit is used in most applications, analyzed as regular 24 SF unit)											
Cap	Cap unit	1,600	0.00	8	0.58	32.0		16.0	16.0	16.0	Yes
DF	Dual Face unit	3,500	0.00	8	1.50	28.0	14.0	14.0	14.0	14.0	Yes
Cast-in-place coping (overhang would be 19 inches less than the Alignment dimension entered - custom coping may be entered below)											
12" cp	cast-in-place concrete coping	604		1	1.00	**50.0**		**27.0**	25.0		Yes
18" cp	cast-in-place concrete coping	906		1	1.50	**50.0**		**27.0**	25.0		Yes
24" cp	cast-in-place concrete coping	1,208		1	2.00	**50.0**		**27.0**	25.0		Yes
30" cp	cast-in-place concrete coping	1,510		1	2.50	**50.0**		**27.0**	25.0		Yes
coping	custom cast-in-place concrete coping	755		1	**1.25**	**50.0**		**27.0**	25.0		Yes
Vertical stack units (modified recess and face to permit construction of a vertical face)											
V6	6SF unit (6 square feet)	1,600	10.75	4	1.50	44	21.0	21.0	21.0	23.5	
V24	24SF unit (24 square feet)	6,000	43.74	8	3.00	44	21.0	21.0	21.2	24.8	
V24-ME	24SF Mass Extender unit	10,000	45.45	8	3.00	56	21.0	21.0	32.7	25.8	
V24-M6	24SF w/ 6" Mass Extender	8,000	44.35	8	3.00	50	21.0	21.0	38.5	25.3	
V24-M18	24SF w/ 18" Mass Extender	12,000	45.56	8	3.00	62	21.0	21.0	50.0	26.5	
V24-M24	24SF w/ 24" Mass Extender	14,000	46.16	8	3.00	68	21.0	21.0	44.2	26.1	
V24-62	24-62 unit (24 square feet)	6,855	75.87	8	3.00	62	21.0	21.0	29.1	33.0	
V24-86	24-86 unit (24 square feet)	7,693	115.07	8	3.00	86	21.0	21.0	40.0	45.1	
Green Wall units (increased setback - use for green wall or as isolated planter block)											
G6	6SF unit set behind loops (6 square feet)	1,600	10.75	4	1.50	44	19.0	**-4.5**	21.0	23.5	
G24	24SF unit set behind loops (24 square feet)	6,000	43.74	8	3.00	44	21.0	**-4.5**	21.2	24.8	
Custom user entered elements below (use for any dealer specific variances from above default dimensions/weights)											

Note: Check on availability of all units w/ local Producer/Dealer. Some units may have limited availabilty.

DELTA
SPECIALTY PRECAST CONCRETE ENGINEERS
860 Hooper Road, Endwell, NY 13760
www.delta-eas.com
Phone: (607) 231-6600
Fax: (607) 231-6650

JOB	2017.478.001		
DESCRIPTION	Stonestrong Retaining Wall		
SHEET NO	OF	SCALE	
CALCULATED BY	YL	DATE	6/8/2017
CHECKED BY		DATE	

Handling Analysis

24-86 Blocks control.

Stripping fc' = 2500 psi
5*√f'c = 250 psi

Casting Position - Face Down

Assume a single strap a midpoint of rear face

Load Factor = 1.3

Weight of Block =	7693	lb	
Web Tension Tu =	5000	lb	
Web Height h =	36	in	
Web Thickness t =	6	in	
5*√f'c h t =	54000	lb	OK

Upright Position

CG of Block from Front Face =	40	in	
CG of Block from Rear Face =	46	in	
Half of Block Weight =	3847	lb	
Web Bending Mu =	9584	lb-ft	
$S = t h^2 /6 =$	1296	in^3	
5*√f'c S =	27000	lb-ft	OK

1.1.4 REINFORCEMENT CONNECTION

Paraweb Connection Insert Details
Typical Paraweb Layout

© Stone Strong Systems

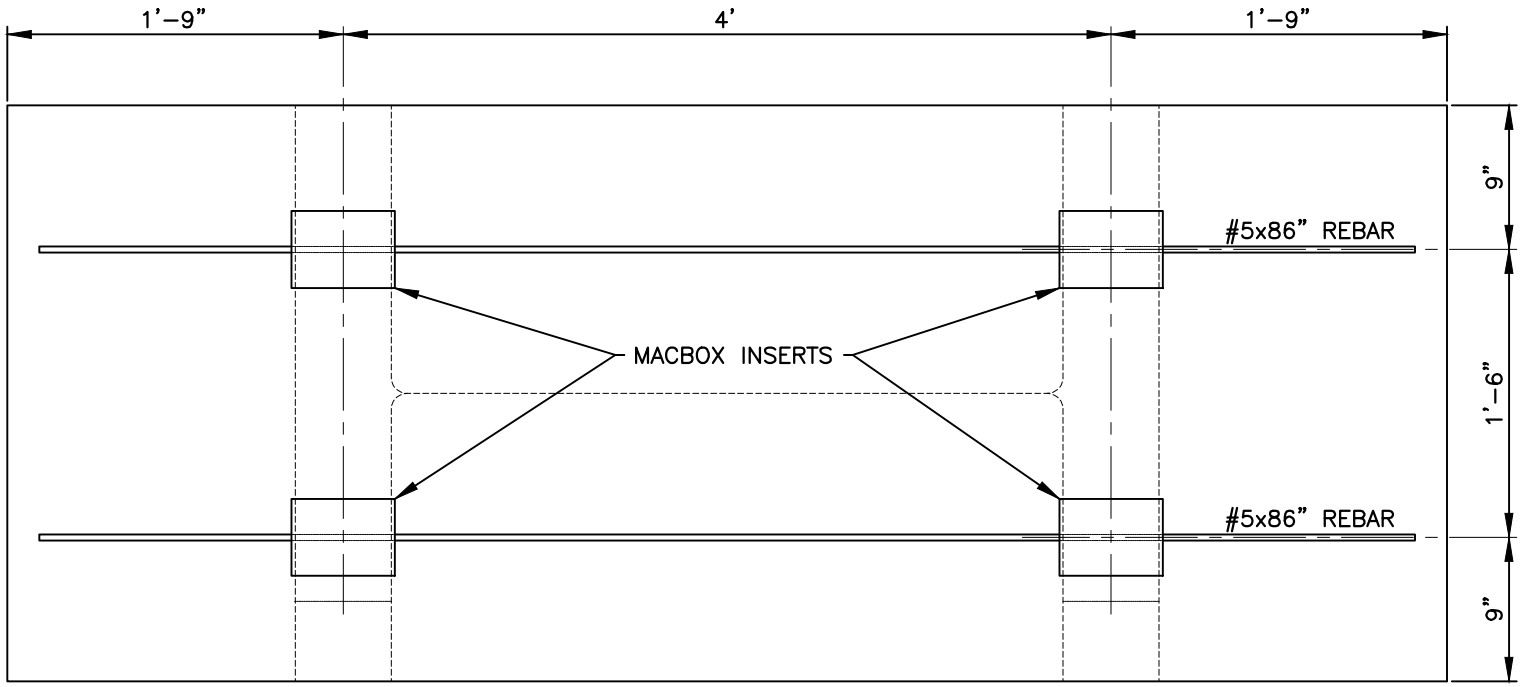

24 SF UNIT w/PARAWEB INSERTS

DISCLAIMER:

These typical details are preliminary and conceptual in nature. They are provided for general information purposes only. Anyone making use of these details and related information does so at their own risk and assumes all liability for such use. Site specific design should be performed by a licensed Professional Engineer based on actual site conditions, materials, and local practices.

Stone Strong LLC retains al common law, statutory, and other reserved rights to these drawings including the copyright. Limited license is granted to copy, reproduce, or modify the details to prepare construction drawings for Stone Strong retaining walls. Stone Strong LLC makes no warranties, either expressed or implied, of merchantability or fitness for any particular purpose, and accepts no responsibility for the accuracy, suitability, or completeness of information contained herein.

STONE STRONG SYSTEMS®

www.stonestrong.com

PROJECT

TYPICAL DETAILS
STONE STRONG SYSTEMS

DATE: 12/16/19 | FILE: 26_24sf–Rear Shell–

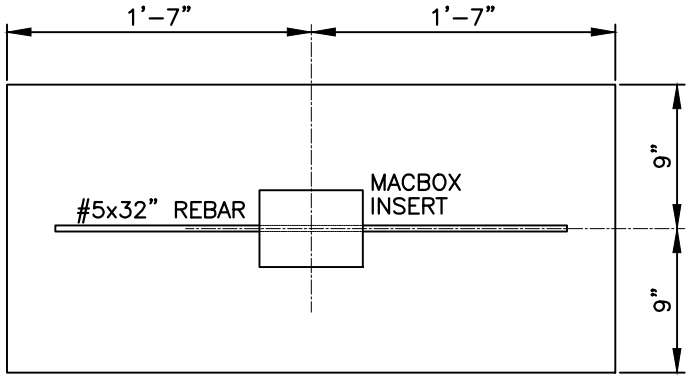

6 SF UNIT w/PARAWEB INSERT

DISCLAIMER:

These typical details are preliminary and conceptual in nature. They are provided for general information purposes only. Anyone making use of these details and related information does so at their own risk and assumes all liability for such use. Site specific design should be performed by a licensed Professional Engineer based on actual site conditions, materials, and local practices.

Stone Strong LLC retains al common law, statutory, and other reserved rights to these drawings including the copyright. Limited license is granted to copy, reproduce, or modify the details to prepare construction drawings for Stone Strong retaining walls. Stone Strong LLC makes no warranties, either expressed or implied, of merchantability or fitness for any particular purpose, and accepts no responsibility for the accuracy, suitability, or completeness of information contained herein.

STONE STRONG SYSTEMS®

www.stonestrong.com

PROJECT

TYPICAL DETAILS
STONE STRONG SYSTEMS

DATE: 12/16/19 | FILE: 27_6sf–Rear Shell–Ir

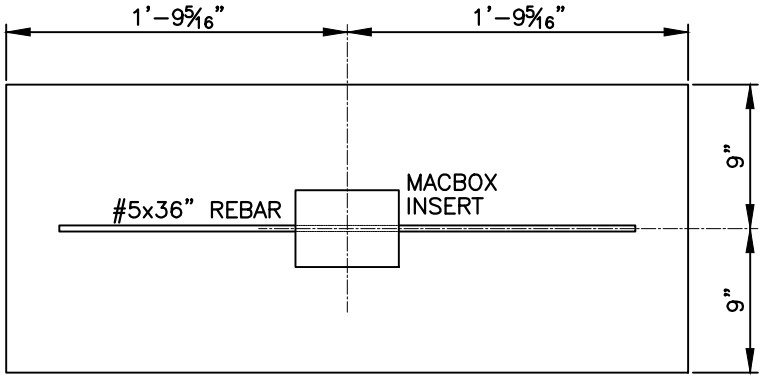

6-28 UNIT w/PARAWEB INSERT

DISCLAIMER:
These typical details are preliminary and conceptual in nature. They are provided for general information purposes only. Anyone making use of these details and related information does so at their own risk and assumes all liability for such use. Site specific design should be performed by a licensed Professional Engineer based on actual site conditions, materials, and local practices.

Stone Strong LLC retains al common law, statutory, and other reserved rights to these drawings including the copyright. Limited license is granted to copy, reproduce, or modify the details to prepare construction drawings for Stone Strong retaining walls. Stone Strong LLC makes no warranties, either expressed or implied, of merchantability or fitness for any particular purpose, and accepts no responsibility for the accuracy, suitability, or completeness of information contained herein.

STONE STRONG SYSTEMS®

www.stonestrong.com

PROJECT

TYPICAL DETAILS
STONE STRONG SYSTEMS

DATE: 12/16/19 | FILE: 28_6-28 Rear Shell-

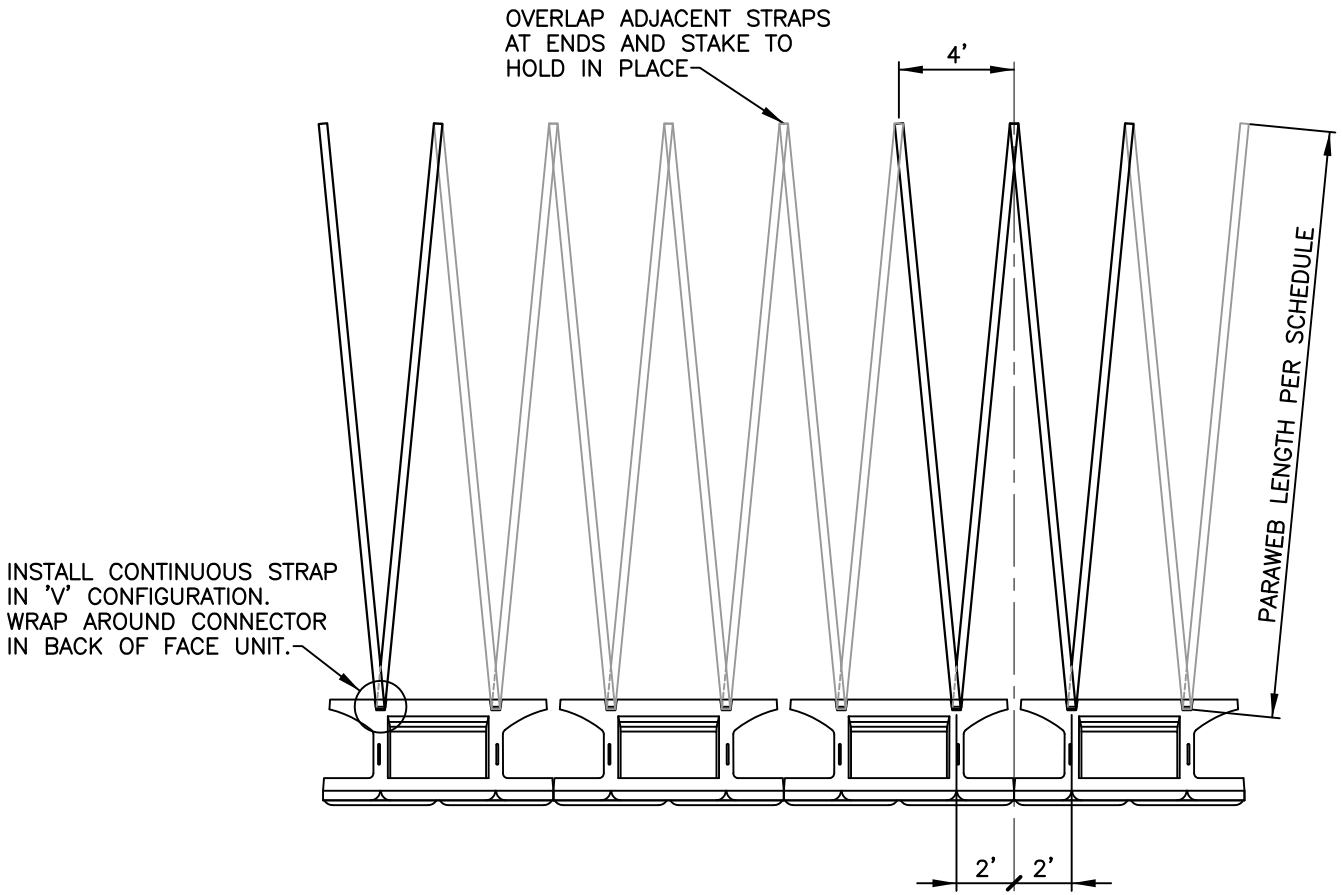

TYPICAL PARAWEB LAYOUT

NOT TO SCALE

DISCLAIMER:

These typical details are preliminary and conceptual in nature. They are provided for general information purposes only. Anyone making use of these details and related information does so at their own risk and assumes all liability for such use. Site specific design should be performed by a licensed Professional Engineer based on actual site conditions, materials, and local practices.

Stone Strong LLC retains al common law, statutory, and other reserved rights to these drawings including the copyright. Limited license is granted to copy, reproduce, or modify the details to prepare construction drawings for Stone Strong retaining walls. Stone Strong LLC makes no warranties, either expressed or implied, of merchantability or fitness for any particular purpose, and accepts no responsibility for the accuracy, suitability, or completeness of information contained herein.

STONE STRONG SYSTEMS®

www.stonestrong.com

PROJECT

TYPICAL DETAILS
STONE STRONG SYSTEMS

DATE: 6/29/18 | FILE: 18_Typical Paraweb L

1.1.5 UNIT DIMENSIONS AND TOLERANCES

System Components

© Stone Strong Systems

STONE STRONG SYSTEMS®
www.stonestrong.com

SYSTEM COMPONENTS

24 SF BLOCK

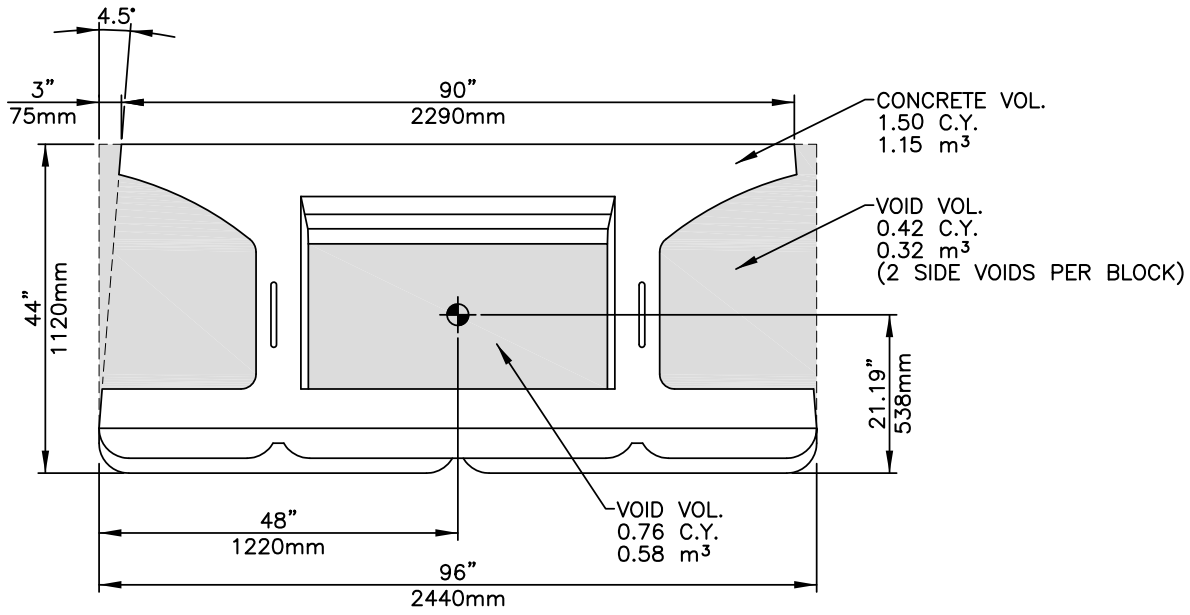

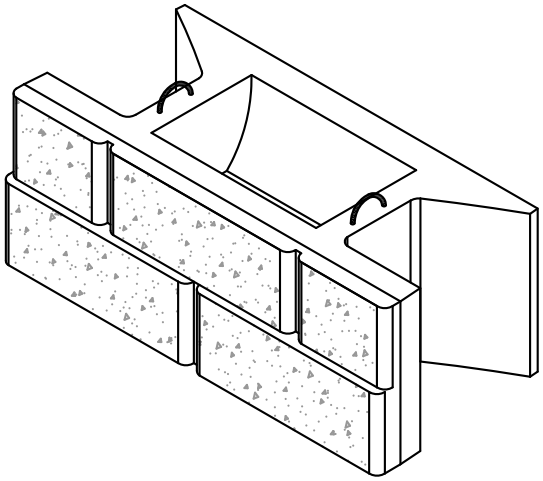

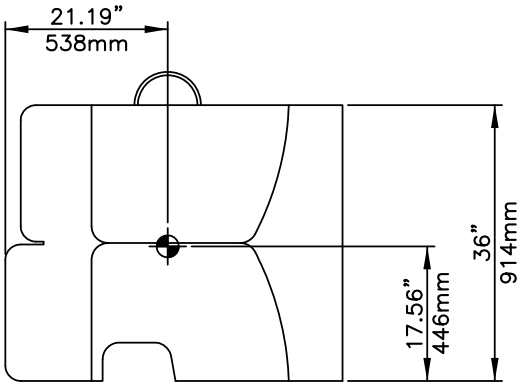

Block Wt.	**6,000 lbs**	**2,720 kg**
Form Wt.	**4,600 lbs**	**2,090 kg**
Concrete Volume	**1.50 CY**	**1.15 m³**
Aggregate Infill	**1.60 CY**	**1.22 m³**
(per face area)	**0.1 tons/sf**	**1,000 kg/m²**

STONE STRONG SYSTEMS®
www.stonestrong.com

SYSTEM COMPONENTS

24 SF TOP BLOCK

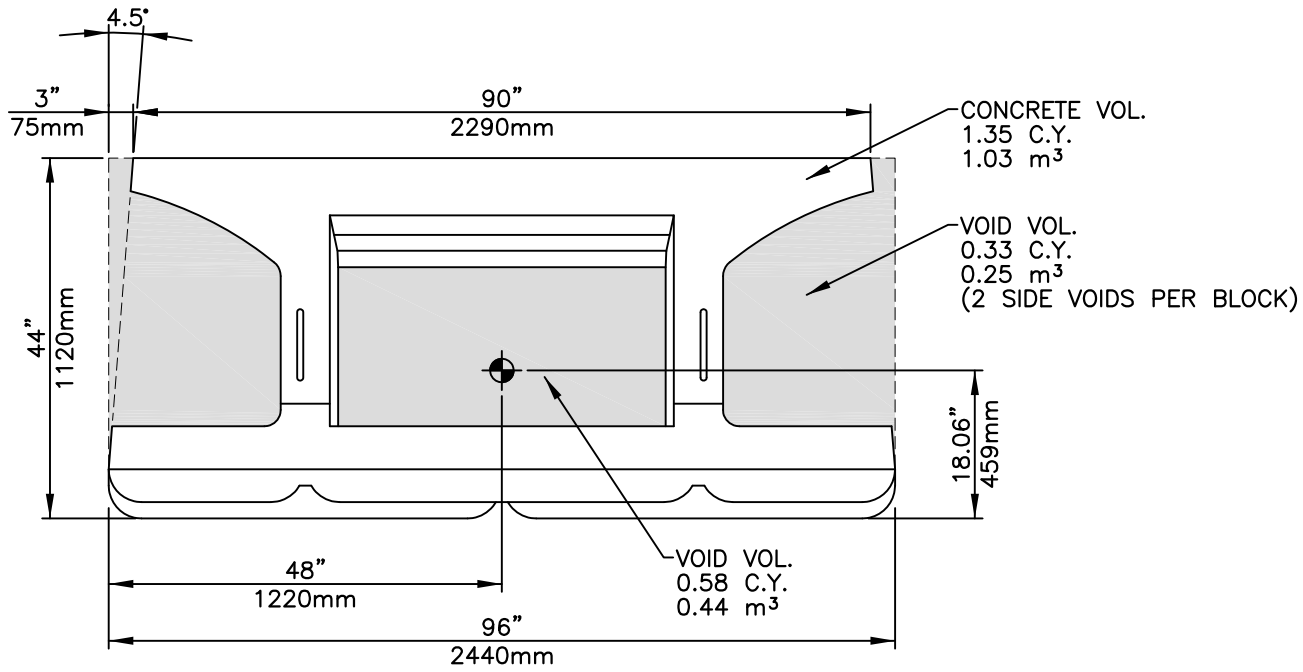

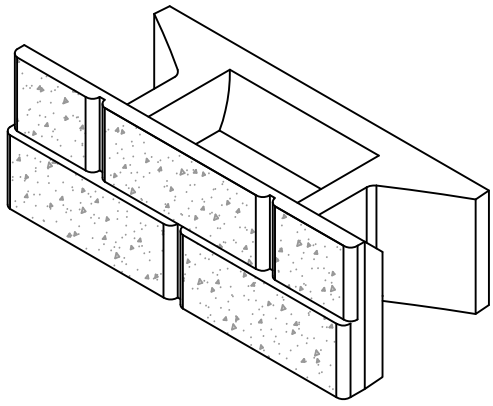

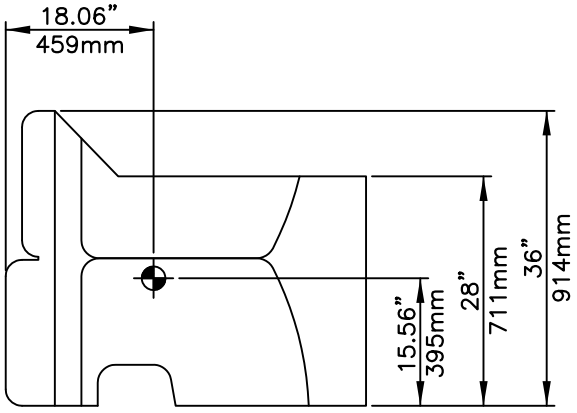

Block Wt.	**5,400 lbs**	**2,445 kg**
Form Wt.	**4,930 lbs**	**2,235 kg**
Concrete Volume	**1.35 CY**	**1.03 m^3**
Aggregate Infill	**1.24 CY**	**0.94 m^3**
(per face area)	**0.1 tons/sf**	**1,000 kg/m^2**

STONE STRONG SYSTEMS®
www.stonestrong.com

SYSTEM COMPONENTS

24 – 62 BLOCK

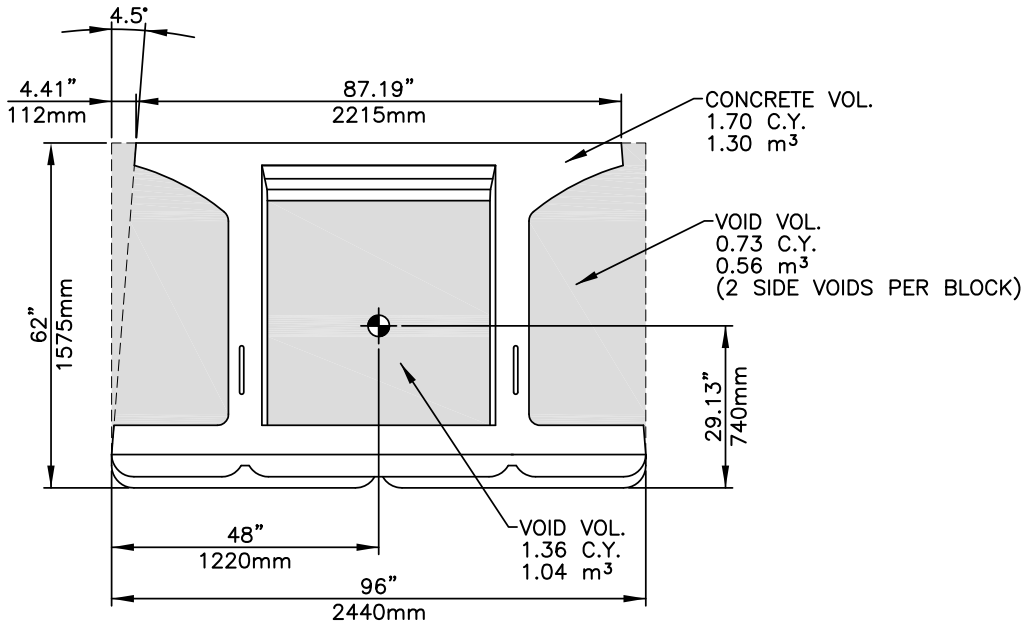

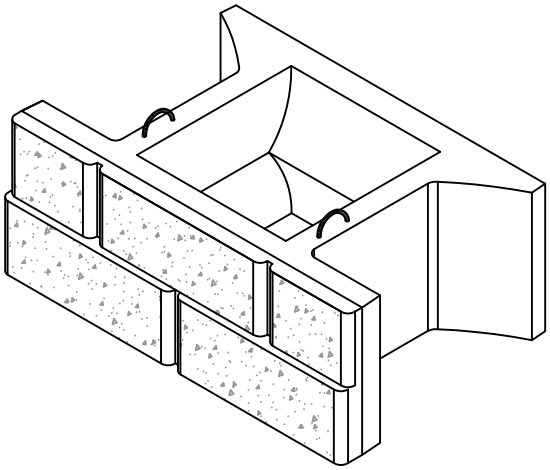

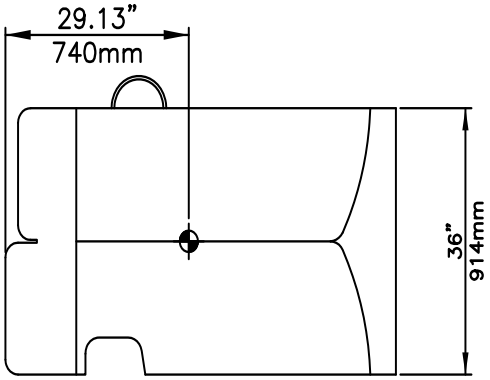

Block Wt.	**6,800 lbs**	**3,080 kg**
Form Wt.	**6,580 lbs**	**2,990 kg**
Concrete Volume	**1.70 CY**	**1.30 m^3**
Aggregate Infill	**2.82 CY**	**2.16 m^3**
(per face area)	**0.2 tons/sf**	**2,000 kg/m^2**

STONE STRONG SYSTEMS®
www.stonestrong.com

SYSTEM COMPONENTS

24 – 86 BLOCK

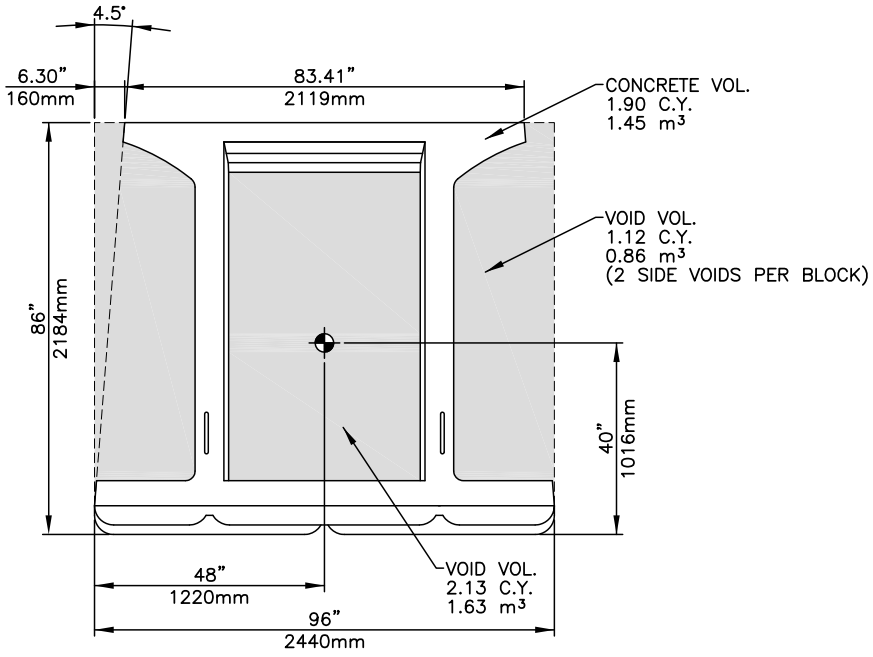

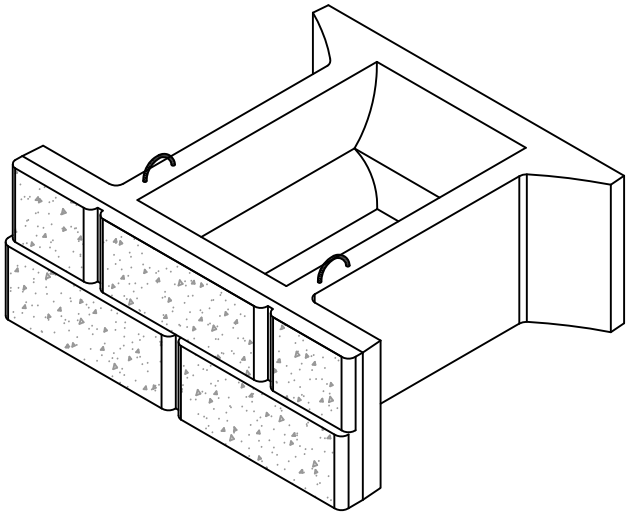

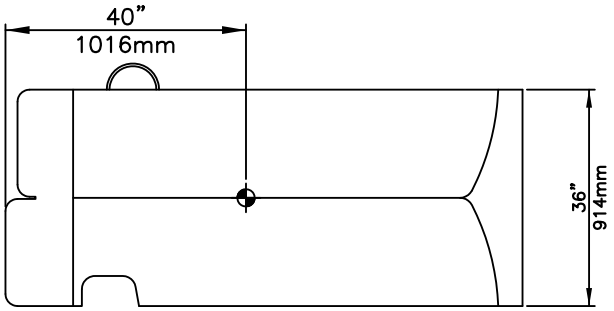

Block Wt.	**7,600 lbs**	**3,445 kg**
Form Wt.	**7,695 lbs**	**3,490 kg**
Concrete Volume	**1.90 CY**	**1.45 m^3**
Aggregate Infill	**4.37 CY**	**3.35 m^3**
(per face area)	**0.3 tons/sf**	**3,000 kg/m^2**

STONE STRONG SYSTEMS®
www.stonestrong.com

SYSTEM COMPONENTS

24 SF MASS EXTENDER BLOCK

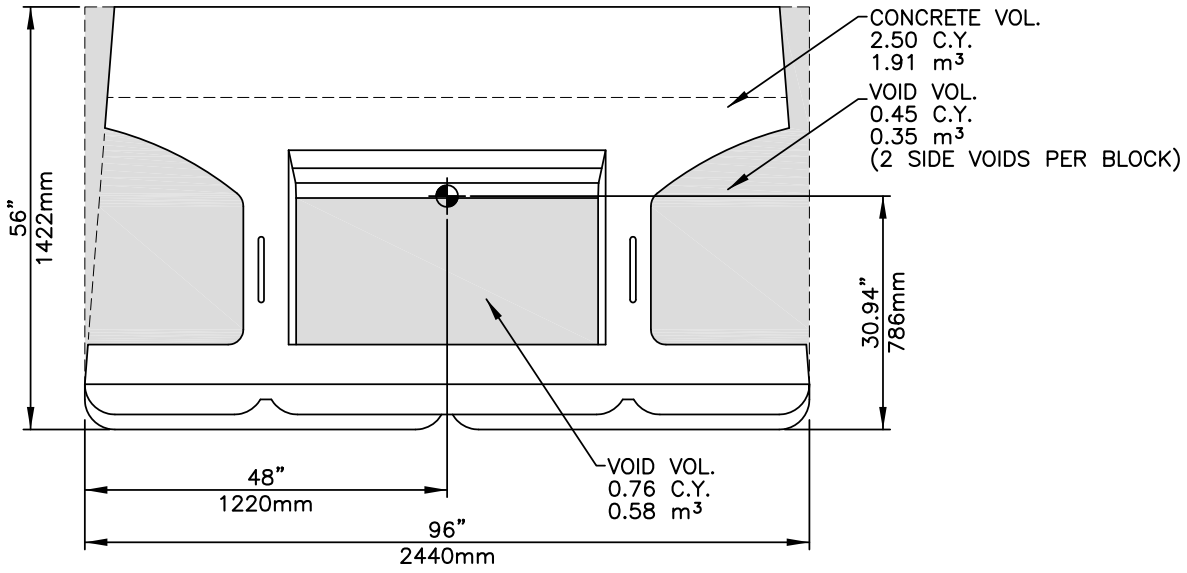

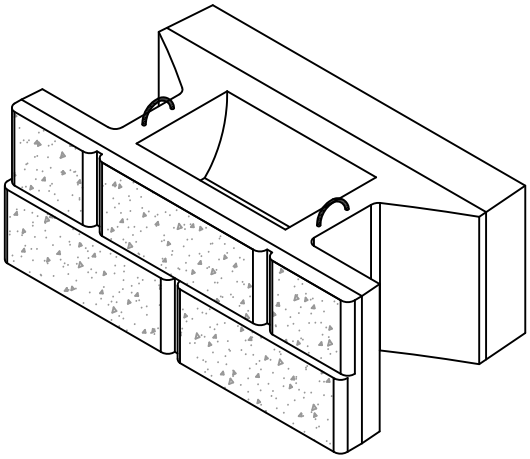

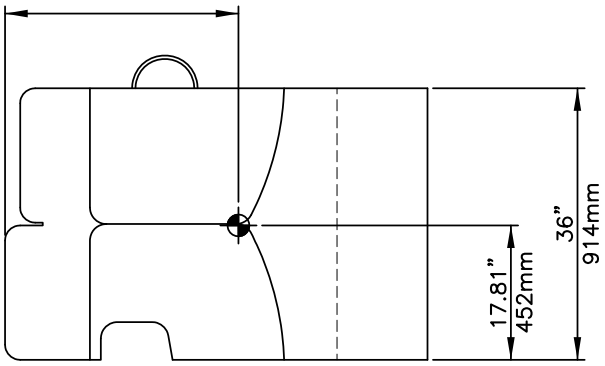

Block Wt.	**10,000 lbs**	**4,585 kg**
Form Wt.	**5,120 lbs**	**2,320 kg**
Concrete Volume	**2.50 CY**	**1.91 m³**
Aggregate Infill	**1.66 CY**	**1.28 m³**
(per face area)	**0.1 tons/sf**	**1,000 kg/m²**

STONE STRONG SYSTEMS®
www.stonestrong.com

SYSTEM COMPONENTS

6 SF BLOCK

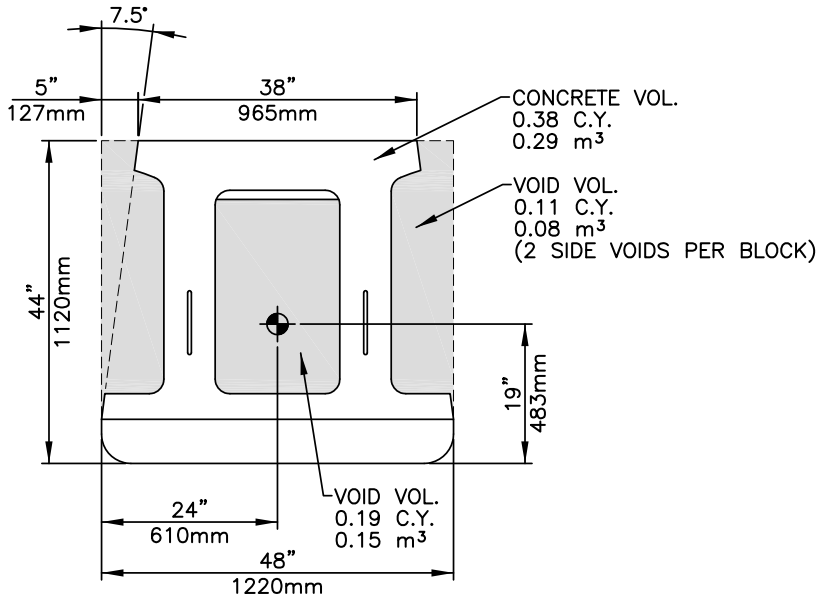

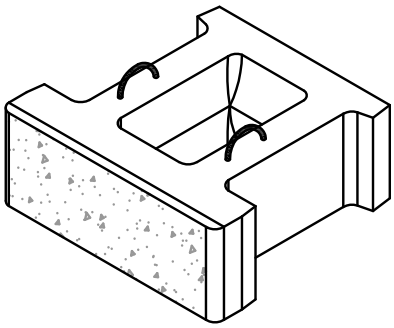

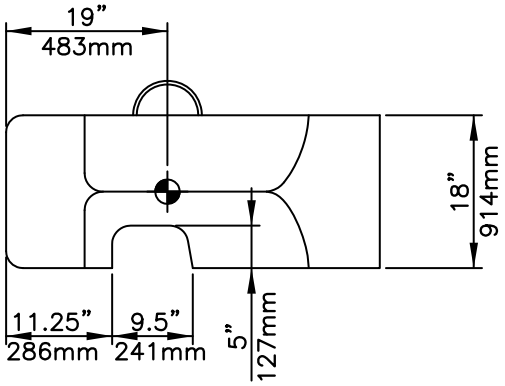

Block Wt.	**1,500 lbs**	**680 kg**
Form Wt.	**1,800 lbs**	**815 kg**
Concrete Volume	**0.38 CY**	**0.29 m³**
Aggregate Infill	**0.41 CY**	**0.31 m³**
(per face area)	**0.1 tons/sf**	**1,000 kg/m²**

STONE STRONG SYSTEMS®
www.stonestrong.com

SYSTEM COMPONENTS

6SF TOP BLOCK

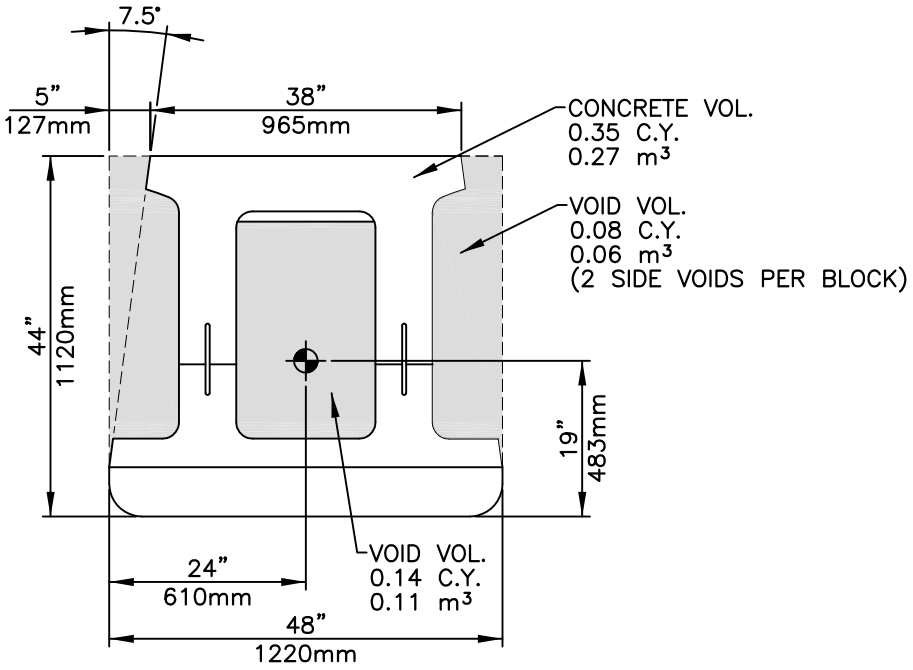

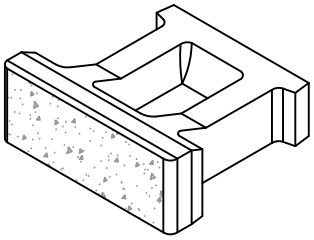

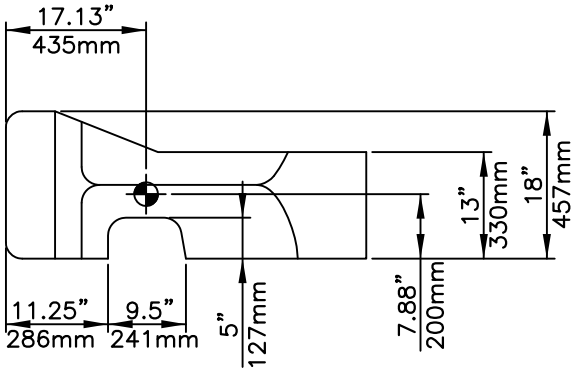

Block Wt.	**1,400 lbs**	**635 kg**
Form Wt.	**1,955 lbs**	**885 kg**
Concrete Volume	**0.5 CY**	**0.27 m^3**
Aggregate Infill	**0.30 CY**	**0.23 m^3**
(per face area)	**0.1 ton/sf**	**1,000 kg/ m^2**

STONE STRONG SYSTEMS®
www.stonestrong.com

SYSTEM COMPONENTS

3SF BLOCK

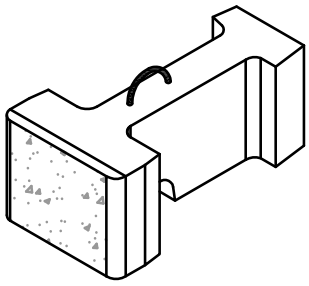

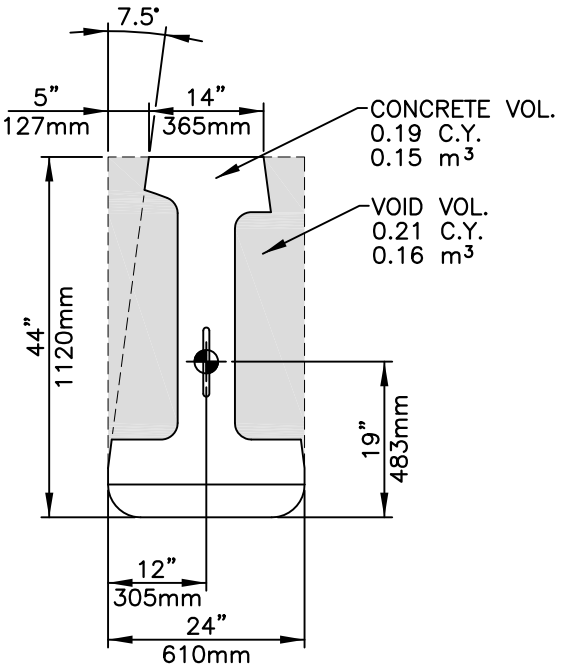

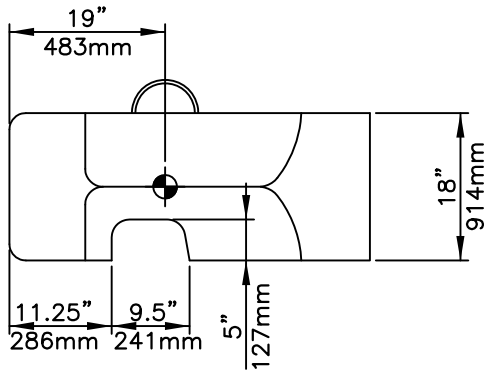

Block Wt.	**740 lbs**	**355 kg**
Form Wt.	**1,820 lbs**	**825 kg**
Concrete Volume	**0.19 CY**	**0.15 m^3**
Aggregate Infill	**0.21 CY**	**0.16 m^3**
(per face area)	**.01 ton/sf**	**1,000 kg/ m^2**

STONE STRONG SYSTEMS®
www.stonestrong.com

SYSTEM COMPONENTS

3SF TOP BLOCK

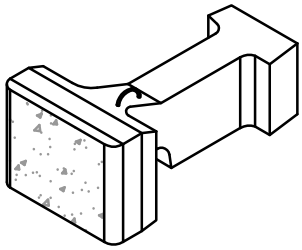

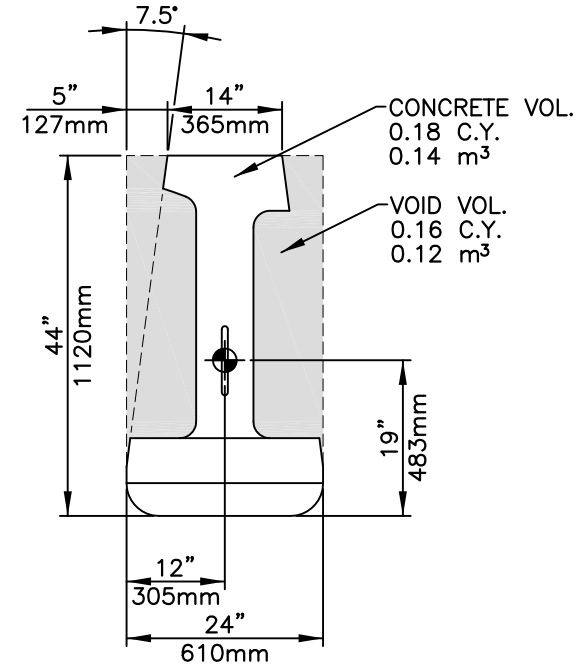

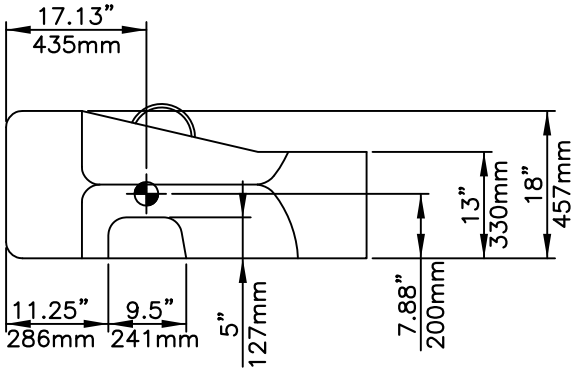

Block Wt.	**690 lbs**	**310 kg**
Form Wt.	**1,975 lbs**	**895 kg**
Concrete Volume	**0.18 CY**	**0.14 m³**
Aggregate Infill	**0.16 CY**	**0.12 m³**
(per face area)	**.01 ton/sf**	**1,000 kg/ m²**

STONE STRONG SYSTEMS®
www.stonestrong.com

SYSTEM COMPONENTS

6 – 28 BLOCK

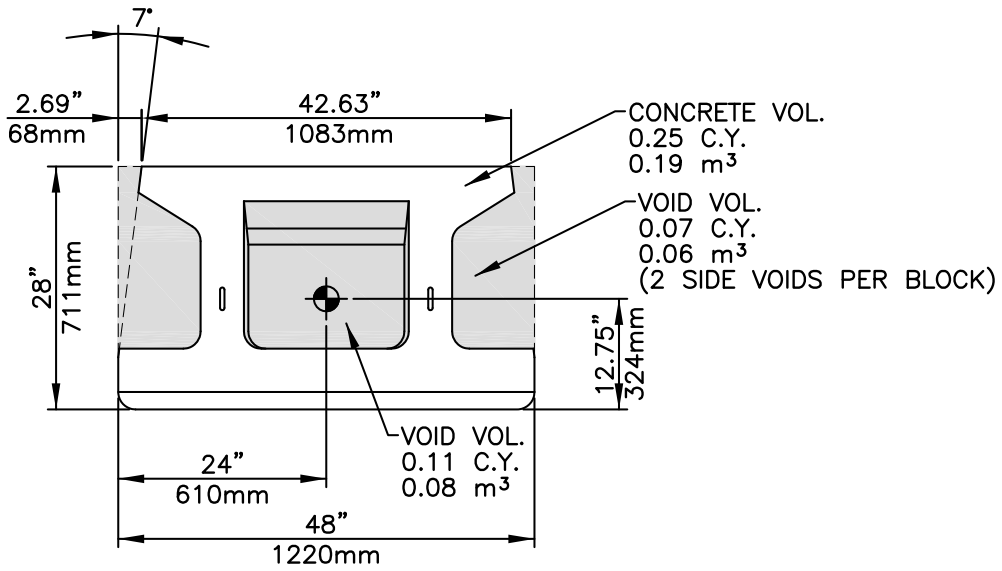

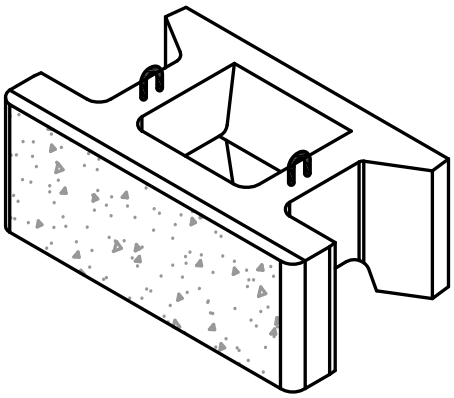

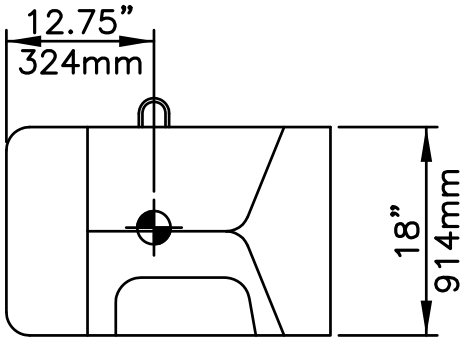

Block Wt.	**950 lbs**	**430 kg**
Form Wt.	**1,500 lbs**	**680 kg**
Concrete Volume	**0.25 CY**	**0.19 m³**
Aggregate Infill	**0.25 CY**	**0.19 m³**
(per face area)	**0.07 tons/sf**	**700 kg/m²**

STONE STRONG SYSTEMS®
www.stonestrong.com

SYSTEM COMPONENTS

6 – 28 TOP BLOCK

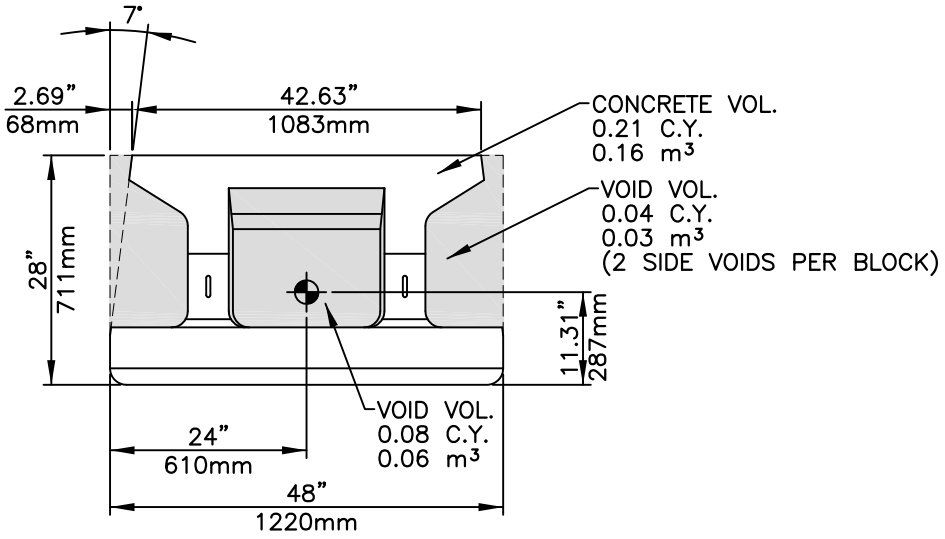

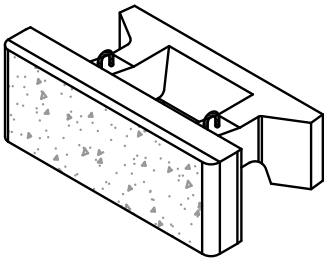

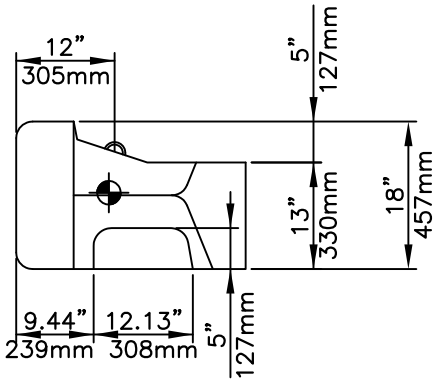

Block Wt.	**840 lbs**	**380 kg**
Form Wt.	**1,580 lbs**	**715 kg**
Concrete Volume	**0.21 CY**	**0.16 m^3**
Aggregate Infill	**0.16 CY**	**0.12 m^3**
(per face area)	**0.07 ton/sf**	**700 kg/ m^2**

STONE STRONG SYSTEMS®
www.stonestrong.com

SYSTEM COMPONENTS

END – CORNER BLOCK

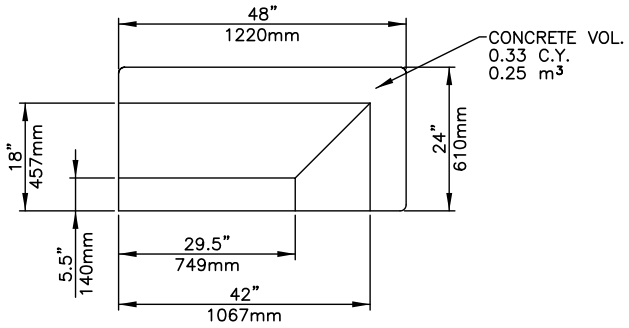

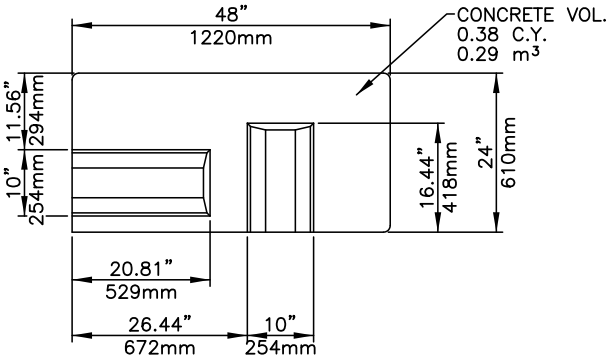

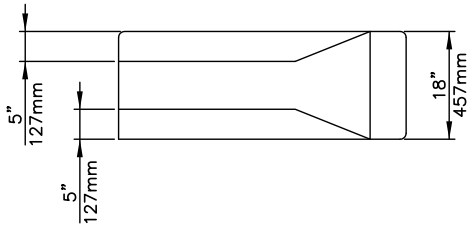

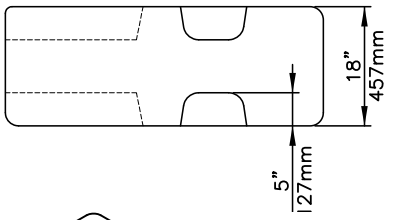

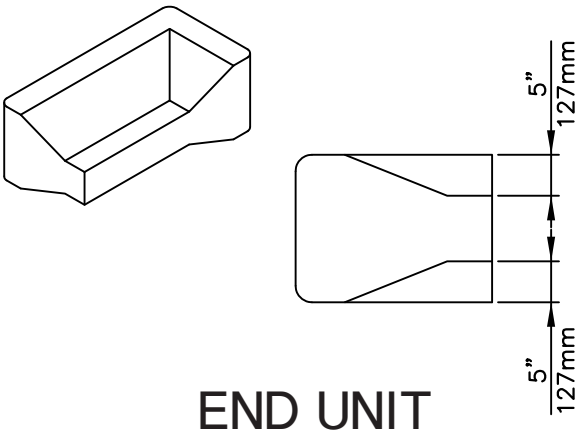

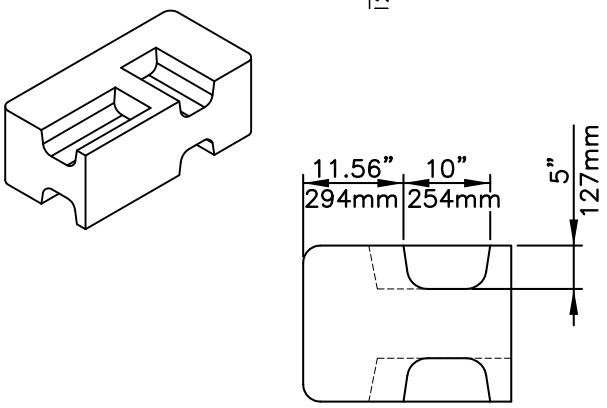

END UNIT

Block Wt.	1,300 lbs	590 kg
Form Wt.	1,650 lbs	750 kg
Concrete Volume	0.33 CY	0.25 m^3

CORNER UNIT

Block Wt.	1,500 lbs	680 kg
Form Wt.	1,490 lbs	675 kg
Concrete Volume	0.38 CY	0.29 m^3

STONE STRONG SYSTEMS®
www.stonestrong.com

SYSTEM COMPONENTS

DUAL FACE BLOCK

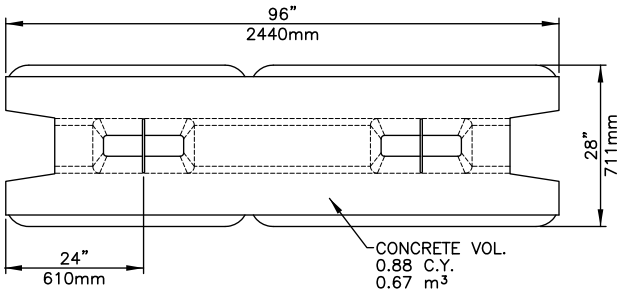

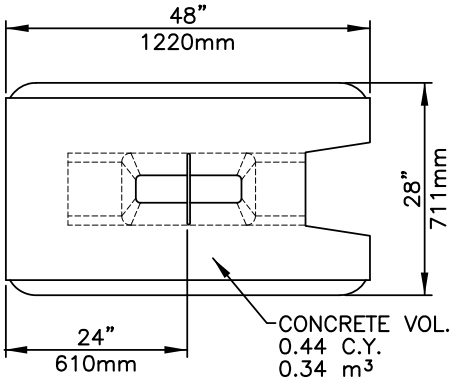

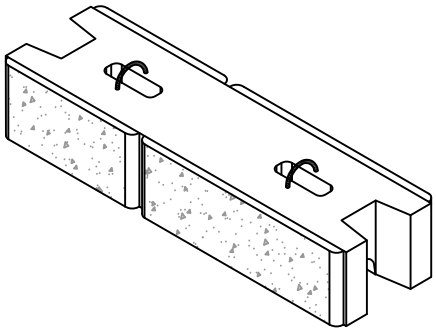

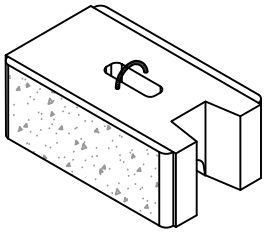

DUAL FACE UNIT

Block Wt.	**3,520 lbs**	**1,595 kg**
Form Wt.	**2,430 lbs**	**1,100 kg**
Concrete Volume	**0.88 CY**	**0.67 m³**

DUAL FACE HALF UNIT

Block Wt.	**1,760 lbs**	**800 kg**
Form Wt.	**2,430 lbs**	**1,100 kg**
Concrete Volume	**0.44 CY**	**0.34 m³**

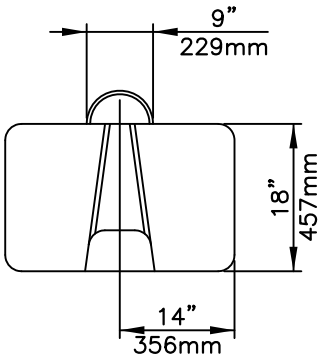

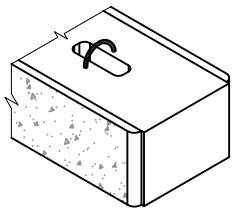

ALTERNATE FINISHED END

STONE STRONG SYSTEMS®
www.stonestrong.com

SYSTEM COMPONENTS

DUAL FACE END BLOCK

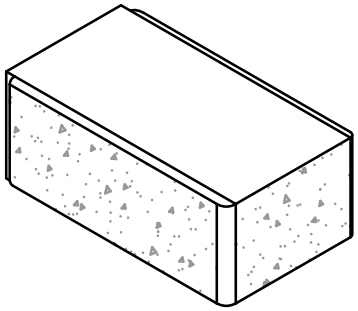

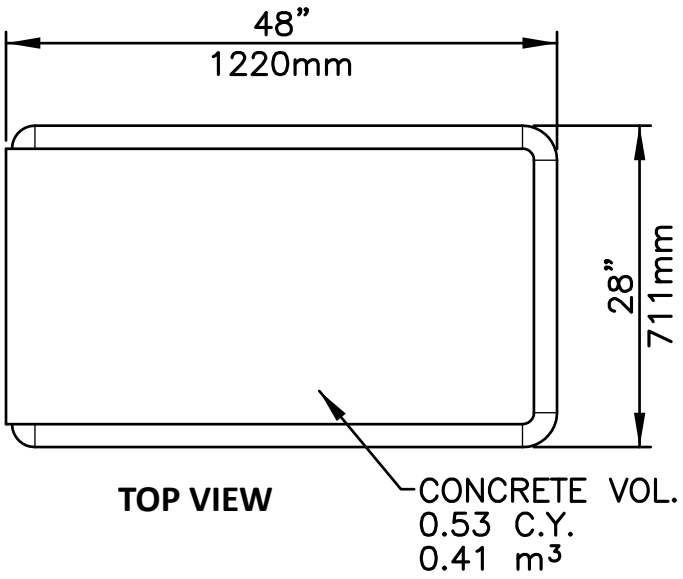

TOP VIEW

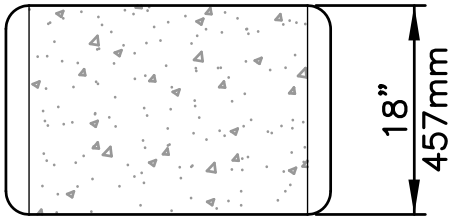

END VIEW

Block Wt.	**2,150 lbs**	**975 kg**
Form Wt.	**1,889 lbs**	**857 kg**
Concrete Volume	**0.53 CY**	**0.41 m³**

STONE STRONG SYSTEMS®
www.stonestrong.com

SYSTEM COMPONENTS

CAP BLOCK

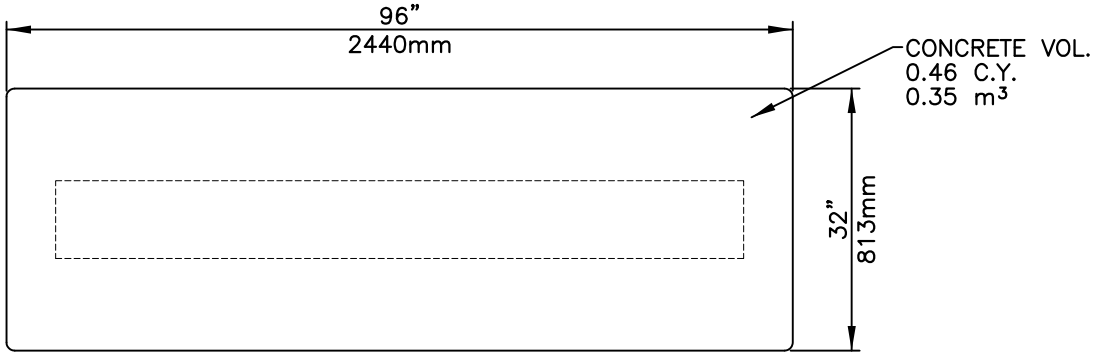

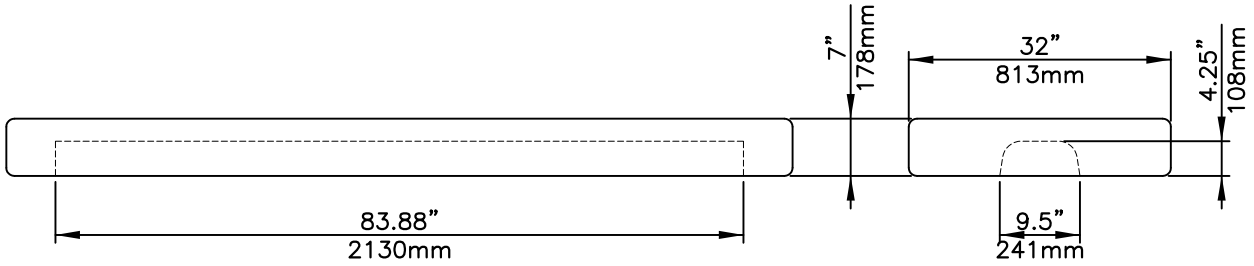

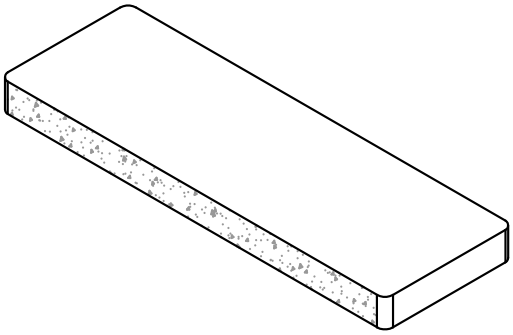

Block Wt.	**1,800 lbs**	**815 kg**
Form Wt.	**1,425 lbs**	**645 kg**
Concrete Volume	**0.46 CY**	**0.35 m³**

STONE STRONG SYSTEMS®
www.stonestrong.com

SYSTEM COMPONETS

OUTSIDE CORNER BLOCK

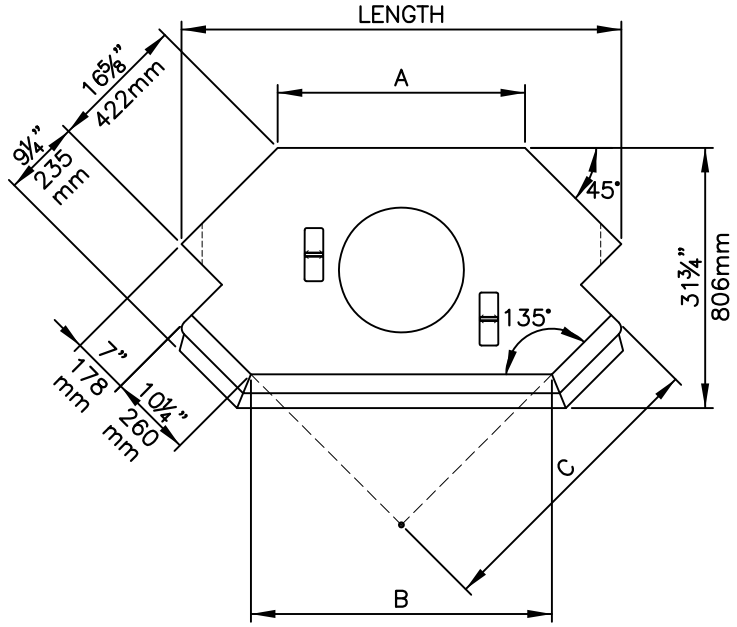

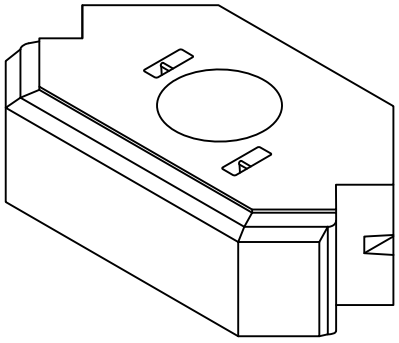

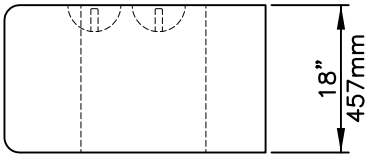

Block #	Length	A	B	C	Block Weight
1	65 in 1652 mm	42 in 1054 mm	48 in 1221 mm	44 in 1124 mm	2600 lbs 1180 kg
2	59 in 1508 mm	36 in 910 mm	42 in 1077 mm	40 in 1022 mm	2330 lbs 1055 kg
3	56 in 1415 mm	30 in 767 mm	37 in 933 mm	36 in 920 mm	2050 lbs 930 kg
4	48 in 1221 mm	25 in 623 mm	31 in 790 mm	32 in 819 mm	1770 lbs 805 kg
5	42 in 1077 mm	19 in 479 mm	25 in 646 mm	28 in 717 mm	1500 lbs 680 kg
6	37 in 933 mm	13 in 336 mm	20 in 502 mm	24 in 616 mm	1220 lbs 555 kg

STONE STRONG SYSTEMS®
www.stonestrong.com

SYSTEM COMPONETS

INSIDE CORNER BLOCK

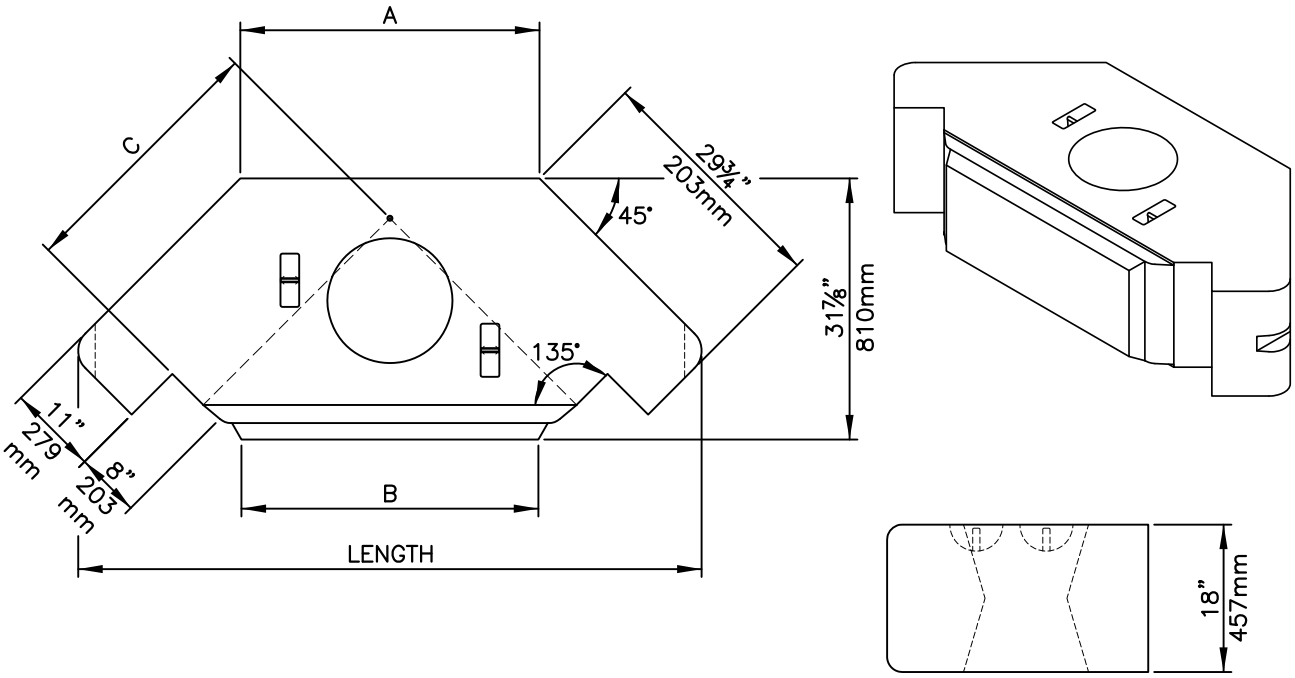

Block #	Length	A	B	C	Block Weight
1	65 in 1646 mm	25 in 641 mm	25 in 633 mm	19 in 485 mm	2070 lbs 940 kg
2	70 in 1790 mm	31 in 784 mm	31 in 777 mm	23 in 593 mm	2350 lbs 1065 kg
3	76 in 1934 mm	37 in 928 mm	36 in 921 mm	27 in 694 mm	2630 lbs 1195 kg
4	82 in 2077 mm	42 in 1072 mm	42 in 1064 mm	31 in 796 mm	2900 lbs 1315 kg
5	87 in 2221 mm	48 in 1215 mm	48 in 1208 mm	35 in 896 mm	3180 lbs 1445 kg
6	93 in 2365 mm	54 in 1359 mm	53 in 1352 mm	39 in 997 mm	3460 lbs 1570 kg

STONE STRONG SYSTEMS®
www.stonestrong.com

SYSTEM COMPONENTS

90° CORNER BLOCK

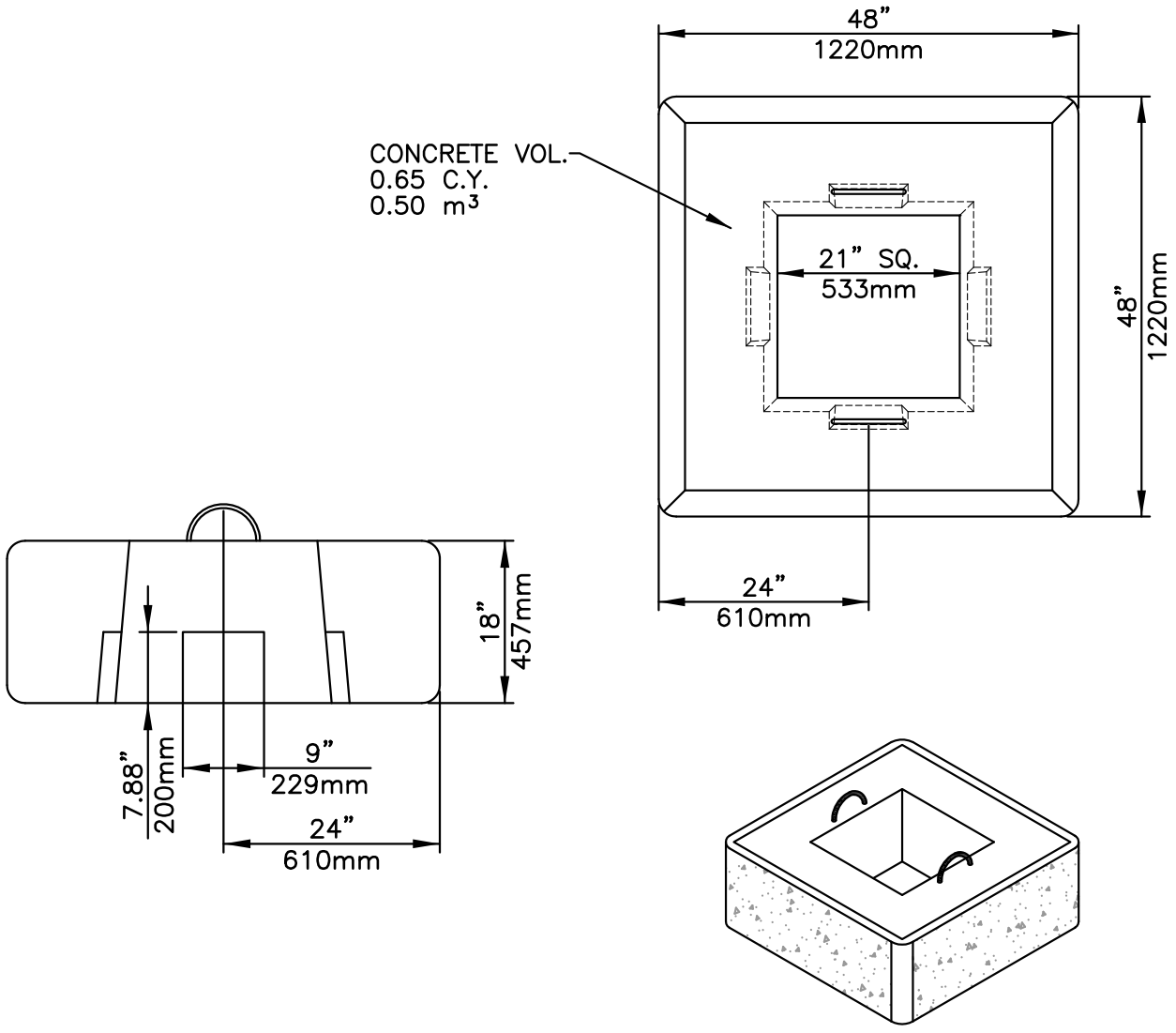

Block Wt.	**2,600 lbs**	**1,180 kg**
Form Wt.	**2,455 lbs**	**1,115 kg**
Concrete Volume	**0.65 CY**	**0.50 m³**

STONE STRONG SYSTEMS®
www.stonestrong.com

SYSTEM COMPONENTS

45° CORNER BLOCK

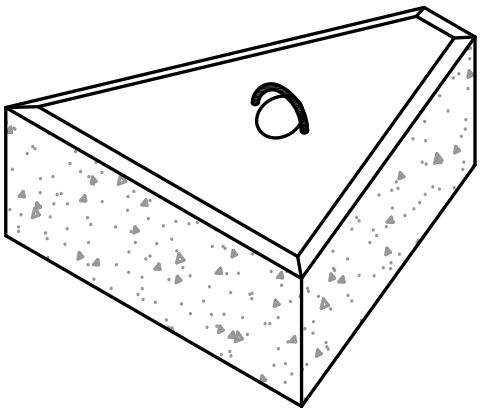

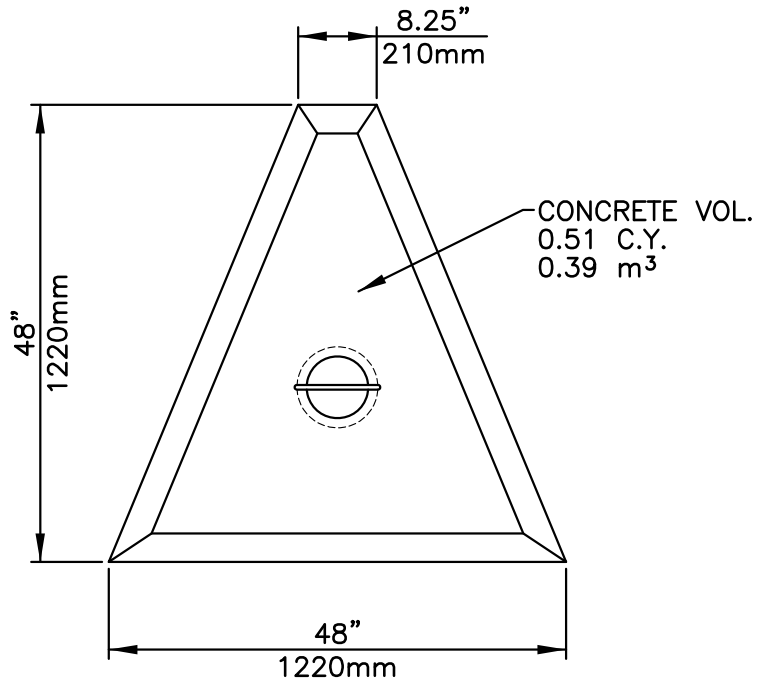

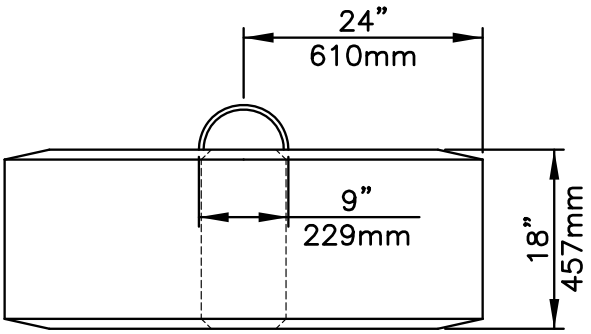

Block Wt.	**2,040 lbs**	**925 kg**
Form Wt.	**3,325 lbs**	**1,510 kg**
Concrete Volume	**0.51 CY**	**0.39 m³**

STONE STRONG SYSTEMS®
www.stonestrong.com

SYSTEM COMPONENTS

CUSTOM TOP BLOCK

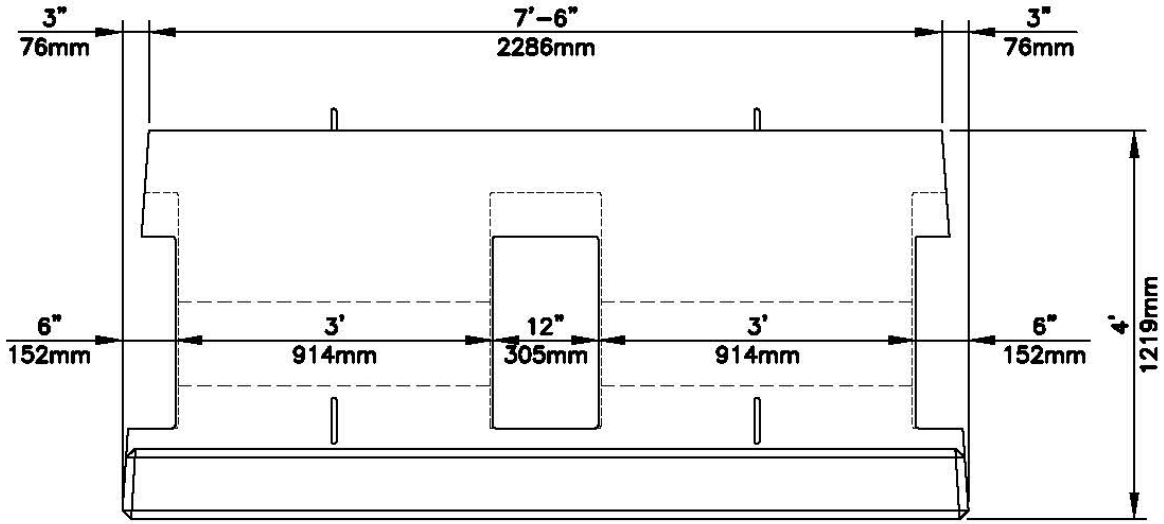

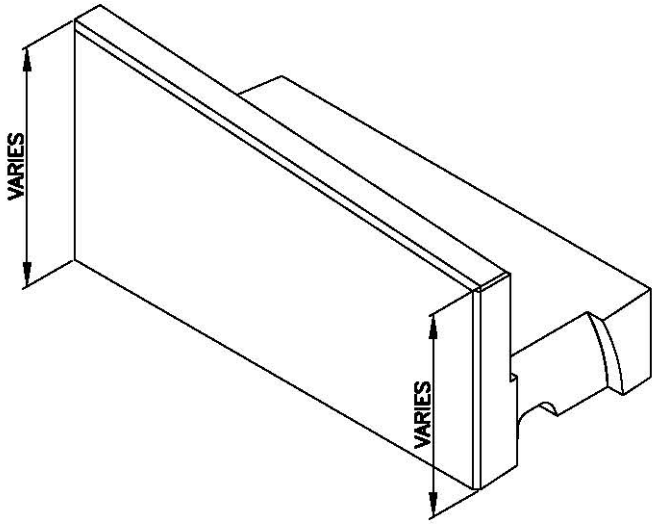

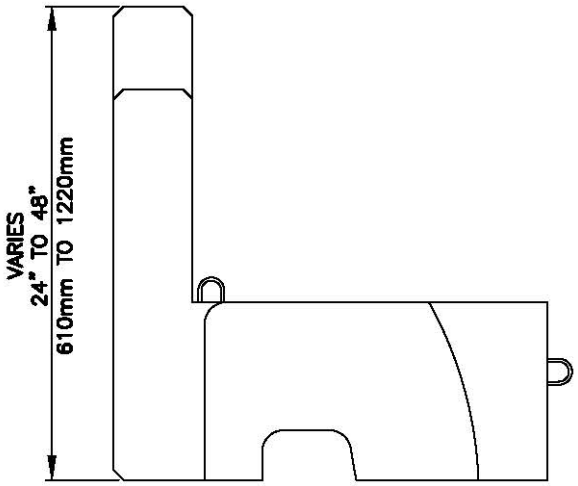

Block Wt.	varies	varies
Form Wt.	4,500 lbs	2,040 kg
Concrete Volume	varies	varies

1.1.6 UNIT FABRICATION

No attachments

© Stone Strong Systems

1.1.7 CONCRETE COMPRESSIVE STRENGTH

No attachments

© Stone Strong Systems

1.1.8 FACING UNIT ABSORPTION

No attachments

© Stone Strong Systems

1.1.9 CONCRETE AIR CONTENT

No attachments

© Stone Strong Systems

1.1.10 INTERFACE SHEAR PROPERTIES

Interface Shear Plot – 24SF Units
Interface Shear Plot – 6SF Units
Interaction Testing Report, 24SF Units with Synteen Geogrid
Interaction Testing Report, 6SF Units with Synteen Geogrid

Note: The interaction test reports are provided only as the source references for the excerpted interface shear plots. These reports are not intended for review of geogrid reinforced MSE systems on DOT projects.

© Stone Strong Systems

INTERFACE SHEAR TESTS

24 SF UNITS

Trial #	Normal (lbs/ft)	Approx Wall Height (ft)	Approx # of Units	Shear @ 3/4" displacement (lbs/ft)	Peak Shear (lbs/ft)
1	4,500	9.6	3.2	3,212	3,616
2	4,500	9.6	3.2	3,464	3,842
3	7,000	14.9	5.0	6,185	6,286
4	9,500	20.2	6.7	6,992	7,344
5	9,500	20.2	6.7	7,155	7,496
6	9,500	20.2	6.7	6,249	6,349
7	9,500	20.2	6.7	5,971	6,551
8	12,000	25.5	8.5	7,206	8,050
9	17,000	36.2	12.1	10,935	12,371
10	22,000	46.8	15.6	13,505	14,084
11	27,000	57.4	19.1	19,149	21,013

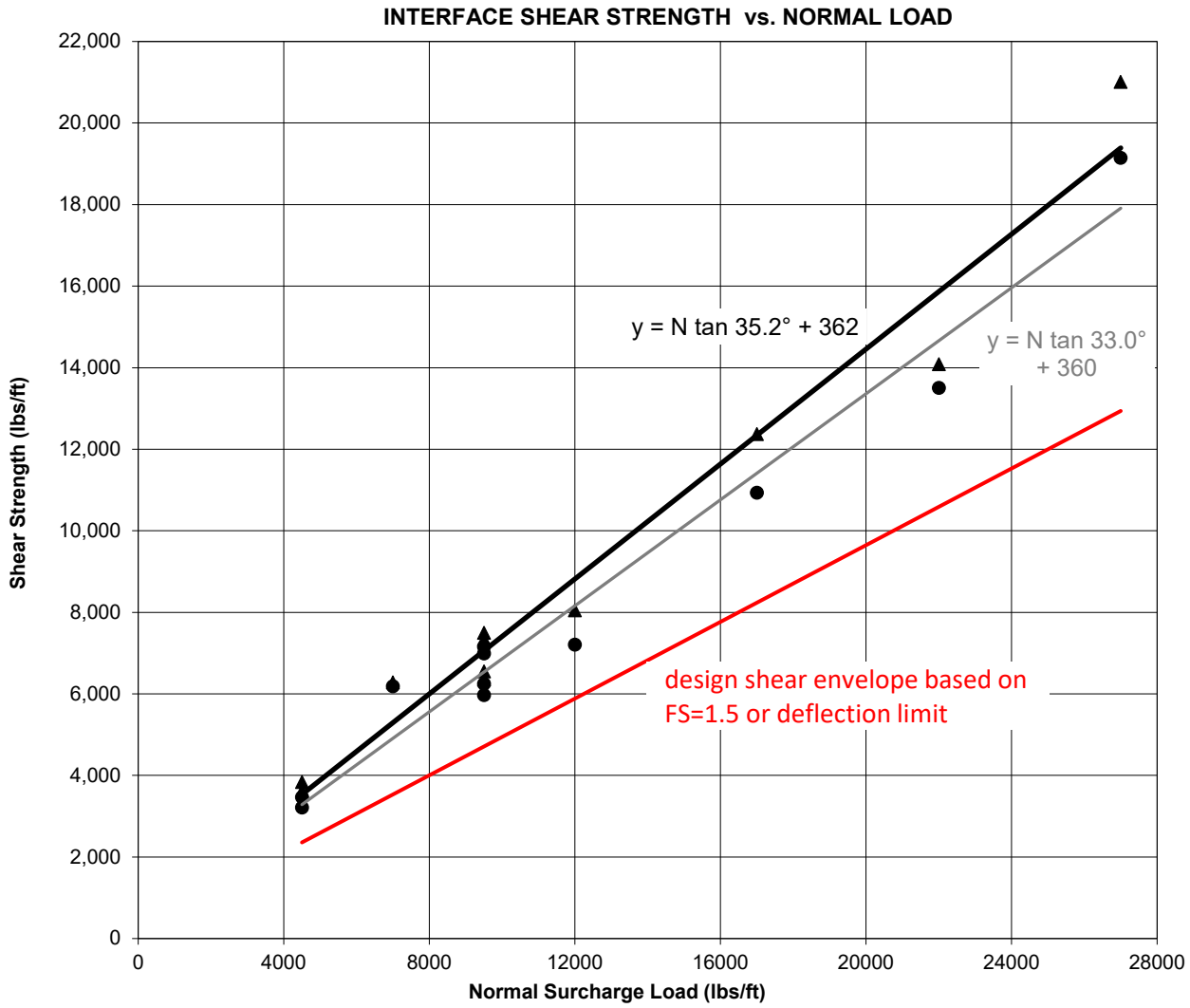

Data is excerpted from Interaction Testing Report, 24SF Units with Synteen Geogrids September 17, 2004 by Thiele Geotech, Inc. in association with Tadros Associates, LLC

INTERFACE SHEAR TESTS

6 SF UNITS

Trial #	Normal (lbs/ft)	Approx Wall Height (ft)	Approx # of Units	Shear @ 3/4" displacement (lbs/ft)	Peak Shear (lbs/ft)
1	2,167	4.6	1.5	2,284	2,385
2	3,667	7.8	2.6	3,561	3,763
3	5,333	11.3	3.8	5,190	5,543
4	7,000	14.9	5.0	6,316	6,316
5	7,000	14.9	5.0	6,383	6,500
6	7,000	14.9	5.0	6,517	6,668
7	7,000	14.9	5.0	6,887	7,156
8	8,667	18.4	6.1	7,945	7,945
9	10,333	22.0	7.3	7,609	8,634
10	12,000	25.5	8.5	9,306	9,944
11	13,667	29.1	9.7	10,767	11,304
12	15,333	32.6	10.9	12,000	12,228

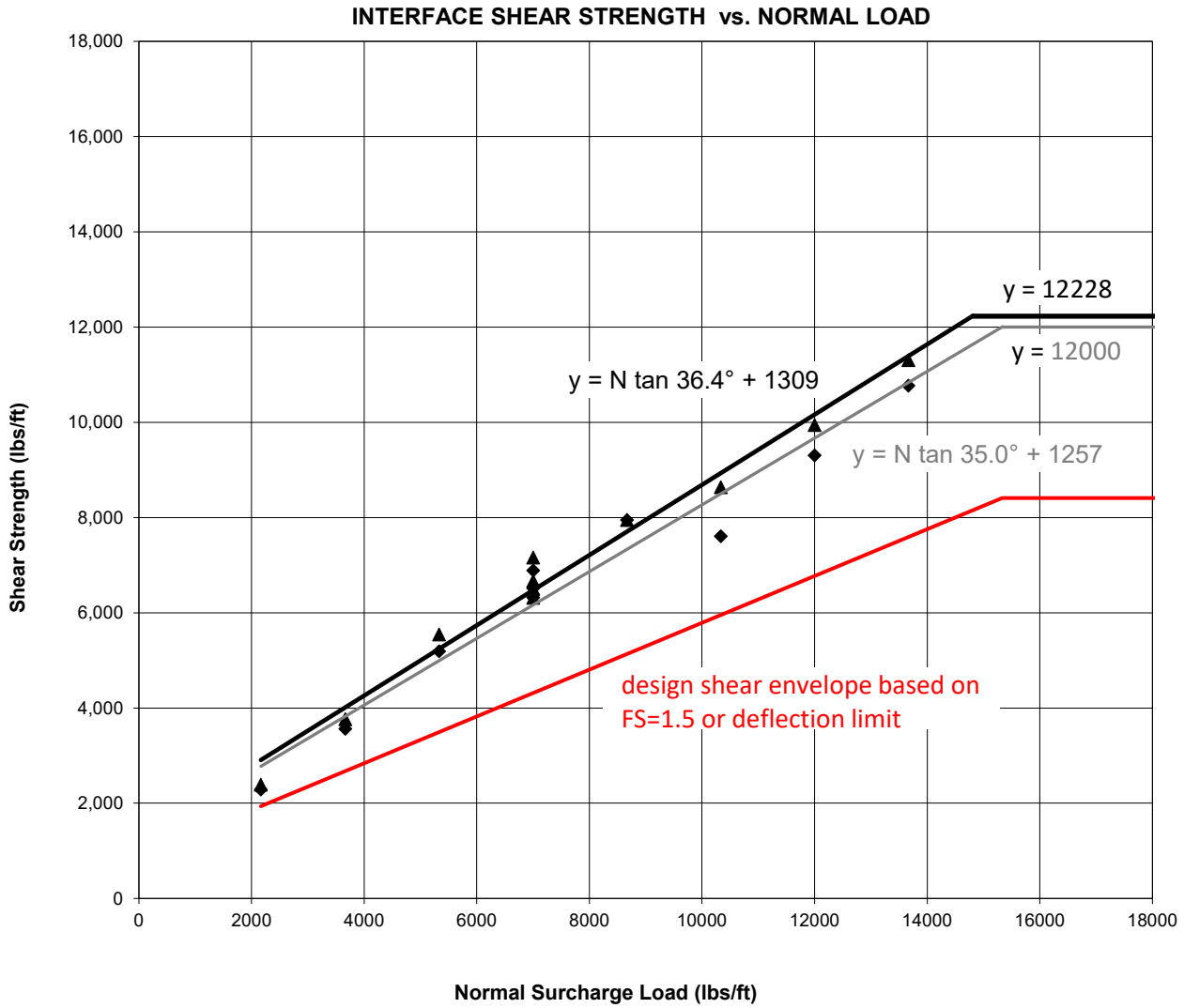

Data is excerpted from Interaction Testing Report, 6SF Units with Synteen Geogrids
May 27, 2005 by Thiele Geotech, Inc. in association with Tadros Associates, LLC

Tadros Associates, LLC
Structural Engineering Consultants

thiele geotech inc TG

Interaction Testing Report

24 SF Units with Synteen Geogrids

Stone Strong Systems
Lincoln, Nebraska

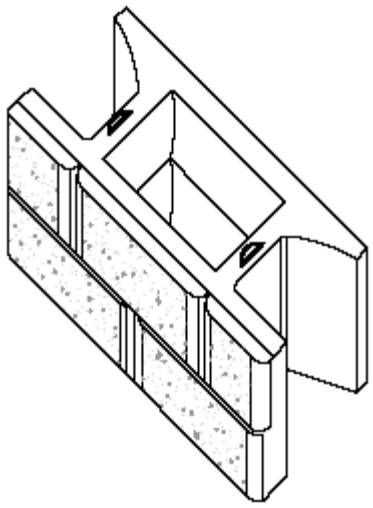

Prepared for:
Stone Strong Systems
1620 South 70th Street, Suite 105
Lincoln, Nebraska 68506

September 17, 2004
TG Project No. 02546.2

THIELE GEOTECH, INC
13478 Chandler Road
Omaha, Nebraska 68138-3716
402/556-2171 Fax 402/556-7831
www.thielegeotech.com

In association with:
TADROS ASSOCIATES, LLC
6910 Pacific Street, Suite 204
Omaha, Nebraska 68106-1045

Interaction Testing Report
24 SF Units with Synteen Geogrids

Table of Contents

INTRODUCTION **1**

MATERIALS **2**

TEST PROCEDURES **3**
- TEST FRAME 3
- INTERFACE SHEAR TESTS 3
- CONNECTION STRENGTH PULLOUT TESTS 4

TEST RESULTS **5**
- INTERFACE SHEAR TESTS 5
- CONNECTION STRENGTH PULLOUT TESTS 5
- CONCLUSIONS 6

APPENDIX

INTRODUCTION

Thiele Geotech, Inc., in association with Tadros Associates, LLC, has completed an interaction testing program to evaluate the interface shear capacity and the connection strength between Stone Strong Systems 24 SF precast concrete segmental retaining wall blocks and Synteen SF55 and SF110 geogrids used in the construction of segmental retaining walls. The results of the testing program were used to define relationships for surcharge load representing stacked Stone Strong units with facing/geogrid connection strength and with interface shear strength both with and without geogrid inclusions.

Due to the large size of the Stone Strong blocks, a custom testing frame was designed by Tadros Associates, LLC. This large test frame accommodates full scale tests under conditions that reproduced field shear and connection conditions. Testing was performed by personnel from Tadros Associates and Thiele Geotech.

MATERIALS

Stone Strong Systems 24 SF blocks are precast concrete blocks used for construction of segmental retaining walls.

The 24 SF unit has nominal face dimensions of 96 inches long and 36 inches tall for a total face area of 24 square feet. The unit has a depth (measured horizontally from the face to the tail) of approximately 44 inches. The units have a center void between twin webs, and the face and tail flanges extend beyond the webs. The rear flange is tapered to allow the blocks to be laid on a curve. Each unit weighs approximately 5,800 to 6,200 pounds empty, depending on the aggregate used to manufature the block. When installed in a retaining wall, the block voids are filled with aggregate. The infilled weight is approximately 10,200 to 11,000 pounds, depending on the unit weights of the concrete and aggregate fill.

Synteen SF55 and SF110 geogrids are uni-directional grids composed of high strength polyester yarns coated with a PVC material. The SF55 and SF110 Geogrids have average ultimate tensile strengths of 3,774 pounds per foot and 10,212 pounds per foot, respectively, based on published test data.

TEST PROCEDURES

TEST FRAME

The apparatus used to conduct the tests consisted of a steel frame anchored to a rigid concrete mat foundation. The frame is capable of resisting 150,000 pounds of surcharge load and 100,000 pounds of shear/pullout force simultaneously. Rollers were mounted between the test frame and the loading beam to allow for block movement during shear testing. Photographs and schematics of the test frame are included in the Appendix of this report.

Surcharge and shear/pullout loads were placed on the blocks using two (2) Enerpac PEJ-1301 submerged hydraulic pumps capable of delivering 20 in^3 per minute at 10,000 psi each. Loads were measured by the use of Omega PX303 pressure transducers with 0 to 10,000 psig range and an accuracy of 0.25 percent FS. Mounted on each pump is a manifold to distribute hydraulic fluid to the two (2) 25 ton, 6 inch stroke (Enerpac RC256) surcharge actuators and the two (2) 25 ton, 6 inch stroke (Enerpac RC256) shear/pullout actuators and to the pressure transducers. The flow of fluid to the shear/pullout actuators is adjustable by an Enerpac V-8F needle valve.

Displacements were measured by the use of two (2) 3 inch stroke and one (1) 6 inch stroke linear potentiometers with 0.15 percent maximum linearity (0.07 percent typical) and less than 0.01 mm hysteresis.

Loads and displacements were continuously measured and recorded during the test by a Data Translation DT9802 date acquisition module connected to a loptop computer via USB interface. Sensor excitation was provided by an Omega 5v regulated power supply. Loads and displacements were recorded a minimum of once per second using DT Measure Foundry software.

INTERFACE SHEAR TESTS

The NCMA SRWU-2 and ASTM D6638 methods of test were used to determine the shear strength between Stone Strong Systems 24 SF concrete block units. The tests were carried out with and without a layer of geosynthetic reinforcement between layers of Stone Strong units. The bottom block was installed and braced against the front of the load frame. Portions of the top of the block were recessed with a bush hammer to control the dimension of the loaded area. Crushed limestone infill was placed in the void of the bottom block. When a geogrid layer was included, the geosynthetic reinforcement was centered over the bottom block. The top Stone Strong unit layer was centered over the bottom block. Crushed limestone infill was placed in the void of the top block.

The top unit was loaded with a constant vertical surcharge load applied to the concrete webs, simulating an equivalent height of stacked blocks. The shear force was applied at a constant rate of displacement until large shear displacements were achieved. The load and displacements were

continuously measured and recorded during the test by a microcomputer/data acquisition system. The tests were continued until failure of the interface components occurred, causing a sustained loss of shearing resistance, or to a displacement of 1½ inches.

CONNECTION STRENGTH PULLOUT TESTS

The NCMA SRWU-1 and ASTM D6638 methods of test were used to determine the connection strength between geosynthetic reinforcement and Stone Strong Systems 24 SF concrete block units. The tests were carried out with a layer of geosynthetic reinforcement between layers of Stone Strong units. The bottom block was installed and braced against the back of the load frame. Crushed limestone infill was placed in the voids of the bottom block. The geosynthetic reinforcement was centered over the bottom block and attached to a clamping device. Sacrificial pieces of geogrid were placed over the extended flanges to maintain even load distribution across the block unit. The top Stone Strong unit layer was placed over the geogrid and centered over the bottom block. Crushed limestone infill was placed in the voids of the top block, and the block was braced against the back of the frame.

The top unit was loaded with a constant vertical surcharge load applied to the concrete webs, simulating an equivalent height of stacked blocks. A tensile force was placed on the geosynthetic reinforcement under constant rate of displacement until failure of the connection system occurred. The load and displacements were continuously measured and recorded during the test by a microcomputer/data acquisition system. Tests were continued until failure occurred as excessive deformation or slippage of the geogrid in the connection or failure of the blocks occurred, causing a sustained loss of tensile resistance recorded.

TEST RESULTS

INTERFACE SHEAR TESTS

Results of the interface shear tests are attached in tables and graphs recorded in the Appendix of this report. The peak interface shear capacity and shear capacity at the displacement criterion of ¾ inch were plotted versus the normal load. The minimum peak shear capacity recorded was 2,822 pounds per foot. The peak interface shear strength between Stone Strong Systems 24 SF units and Synteen SF55 and SF110 Geogrid for equivalent wall heights between 9.6 and 57.4 feet high ranged between 8,667 and 12,371 pounds per foot. Tests repeated using the same normal load had peak shear capacity values within 10 percent of the mean peak shear capacity of the identical tests; therefore, they are within the NCMA recommended limits for demonstrating test repeatability. The service state criterion is defined as the load at ¾ inch deflection.

Lines were best fit to the test data for the individual tests series. Interface shear properties were interpolated from the data, and are summarized in Table 1.

Table 1, Interface Shear Properties

Case	Ultimate			Service State Criterion		
	Minimum (lbs/ft)	Friction Angle (degrees)	Maximum (lbs/ft)	Minimum (lbs/ft)	Friction Angle (degrees)	Maximum (lbs/ft)
Block shear (no geogrid)	362	35.2	19,000	360	33.0	18,000
Shear w/ SF 55 inclusion	2,018	22.5	10,115	1,901	20.5	9,450
Shear w/ SF 110 inclusion	1,640	19.2	10,835	1,640	16.6	9,500

CONNECTION STRENGTH PULLOUT TESTS

Results of the connection strength tests are summarized in tables and graphs recorded in the Appendix of this report. The peak connection capacity and connection capacity at the displacement criterion of ¾ inch were plotted versus the normal load. The minimum peak connection capacity recorded was 2,268 pounds per foot. The recorded peak connection strengths between Stone Strong Systems 24 SF units and Synteen SF55 and SF110 Geogrid were 2,847 and 6,198 pounds per foot, respectively, for equivalent wall heights between 4.8 and 28.7 feet high. Tests repeated using the same normal load had peak shear capacity values within 10 percent of the mean peak shear capacity of the identical tests; therefore, they are within the NCMA recommended limits for demonstrating test repeatability.

Lines were best fit to the test data for the individual tests series. Interface shear properties were interpolated from the data, and are summarized in Table 2.

Table 2, Connection Strength Properties

Case	Ultimate			Service State Criterion		
	Minimum (lbs/ft)	Friction Angle (degrees)	Maximum (lbs/ft)	Minimum (lbs/ft)	Friction Angle (degrees)	Maximum (lbs/ft)
Connection Strength w/ SF 55 inclusion	1,555	16.6	3,090	806	15.0	2,822
Connection Strength w/ SF 110 inclusion	2,233	24.3	6,126	1,624	22.4	4,065

CONCLUSIONS

The design curves illustrated on the graphs in the appendix are based on interpretation of the test data, based on the NCMA Segmental Retaining Wall Design Manual. The design curves are controlled by the ¾ inch displacement criterion. The design values taken from the graphs should be used with caution, as shear and connection strengths may vary based on actual site conditions and construction quality.

Respectfully submitted,
Thiele Geotech, Inc.

Daniel J. Thiele, P.E.

P:\02546.2\REPORT - 24 SF WITH SYNTEEN.DOC

APPENDIX

Test Setup

Photographs

Interface Shear Test Results

SF55 Pullout Results

SF55 Interface Shear Results

SF110 Pullout Results

SF110 Interface Shear Results

Aggregate Test Reports

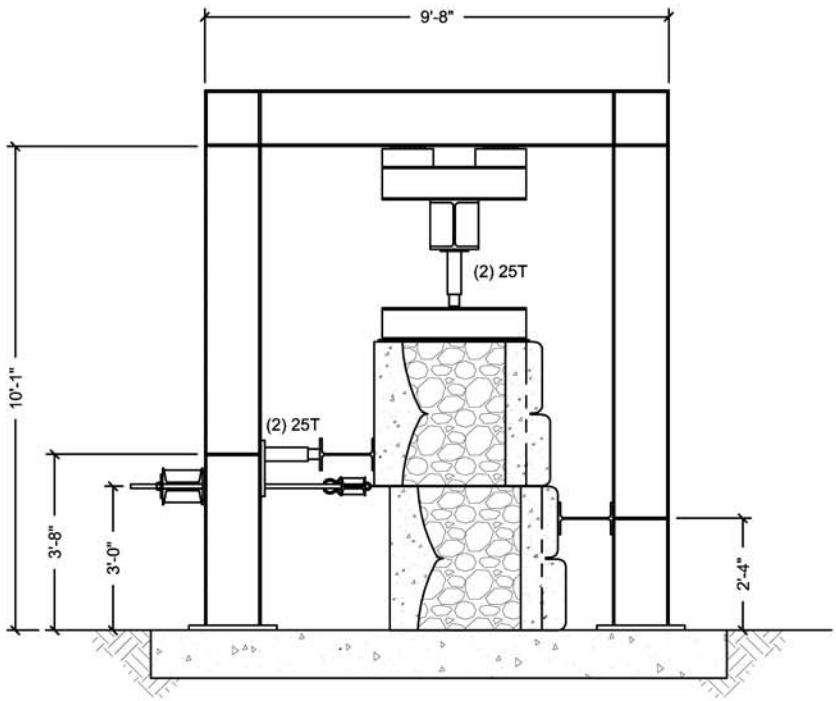

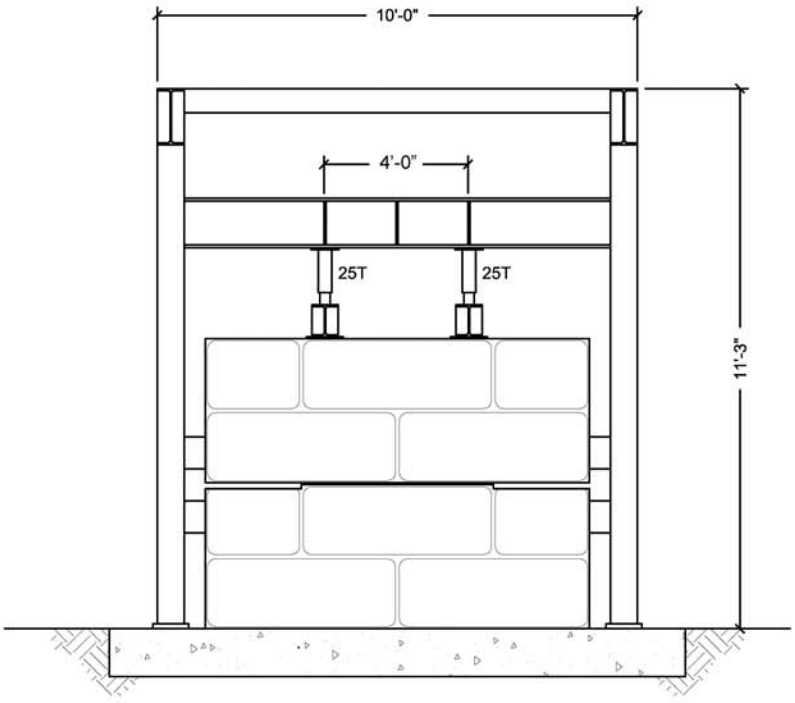

Tadros Associates, LLC
6910 Pacific Street, Suite 204, Omaha, NE 68106
Phone: (402) 553-0234 Fax: (402) 553-0201

Project: SSS Grid Testing	Project No.: NE058-04P01	Designed By:	Rev.:	
	Date: 9/15/04	Checked By:	Rev. Date:	
Title: Shear Frame Setup	Scale: None	Detailed By: NAM	Page: 452	

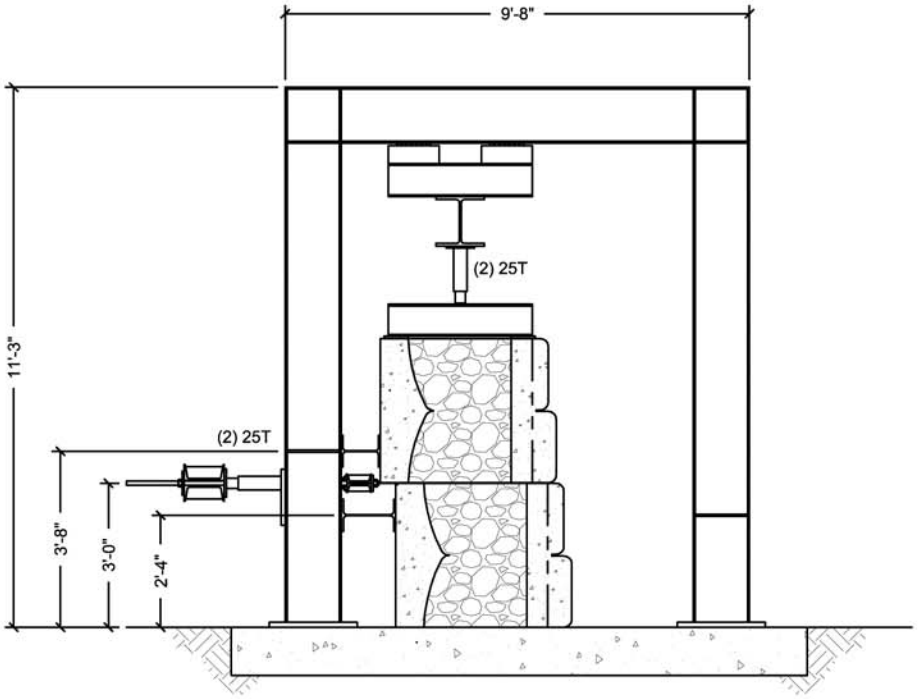

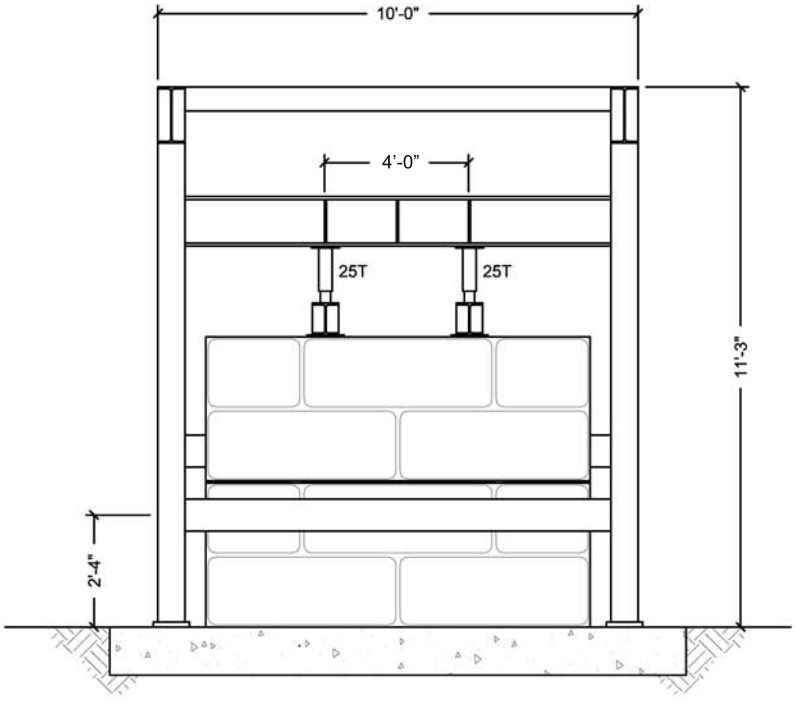

Tadros Associates, LLC
6910 Pacific Street, Suite 204, Omaha, NE 68106
Phone: (402) 553-0234 Fax: (402) 553-0201

Project: SSS Grid Testing		Project No.: NE058-04P01	Designed By:	Rev.:
Title: Grid Pullout Frame Setup		Date: 9/15/04	Checked By:	Rev. Date:
		Scale: None	Detailed By: NAM	Page: 453

24SF Block Shear

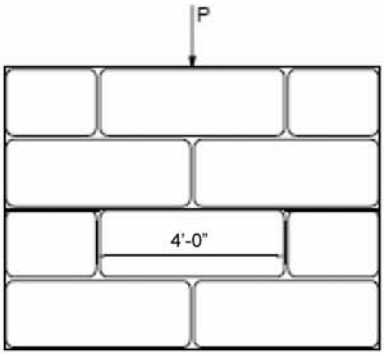

$$\text{Normal Force } \left(\frac{\text{kips}}{\text{ft}}\right) = \frac{\text{P kips}}{\text{4 ft}}$$

$$\text{Shear Force } \left(\frac{\text{kips}}{\text{ft}}\right) = \frac{\text{V kips}}{\text{4 ft}}$$

24SF Grid Shear

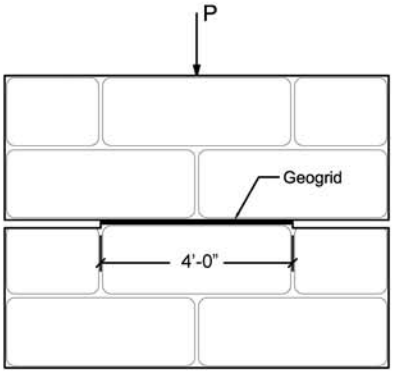

$$\text{Normal Force } \left(\frac{\text{kips}}{\text{ft}}\right) = \frac{\text{P kips}}{\text{4 ft}}$$

$$\text{Shear Force } \left(\frac{\text{kips}}{\text{ft}}\right) = \frac{\text{V kips}}{\text{4 ft}}$$

24SF Grid Pullout

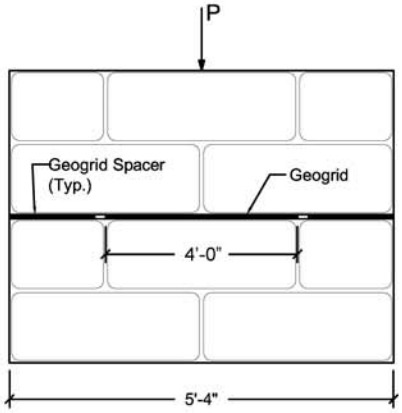

$$\text{Normal Force } \left(\frac{\text{kips}}{\text{ft}}\right) = \frac{\text{P kips}}{\text{8 ft}}$$

$$\text{Grid Pullout } \left(\frac{\text{kips}}{\text{ft}}\right) = \frac{\text{T kips}}{\text{4 ft}}$$

Tadros Associates, LLC
6910 Pacific Street, Suite 204, Omaha, NE 68106
Phone: (402) 553-0234 Fax: (402) 553-0201

Project	Project No.	Designed By	Rev.
SSS Grid Testing	NE058-04P01		
	Date: 9/15/04	Checked By	Rev. Date
Title: Test Setup	Scale: None	Detailed By: NAM	Page: 454

PHOTO NUMBER 1
Test Frame Setup

PHOTO NUMBER 2
Geogrid Pullout System

PHOTO NUMBER 3
Pullout Test Setup

INTERFACE SHEAR TESTS
24 SF UNITS

Trial #	Normal (lbs/ft)	Approx Wall Height (ft)	Approx # of Units	Shear @ 3/4" displacement (lbs/ft)	Peak Shear (lbs/ft)
1	4,500	9.6	3.2	3,212	3,616
2	4,500	9.6	3.2	3,464	3,842
3	7,000	14.9	5.0	6,185	6,286
4	9,500	20.2	6.7	6,992	7,344
5	9,500	20.2	6.7	7,155	7,496
6	9,500	20.2	6.7	6,249	6,349
7	9,500	20.2	6.7	5,971	6,551
8	12,000	25.5	8.5	7,206	8,050
9	17,000	36.2	12.1	10,935	12,371
10	22,000	46.8	15.6	13,505	14,084
11	27,000	57.4	19.1	19,149	21,013

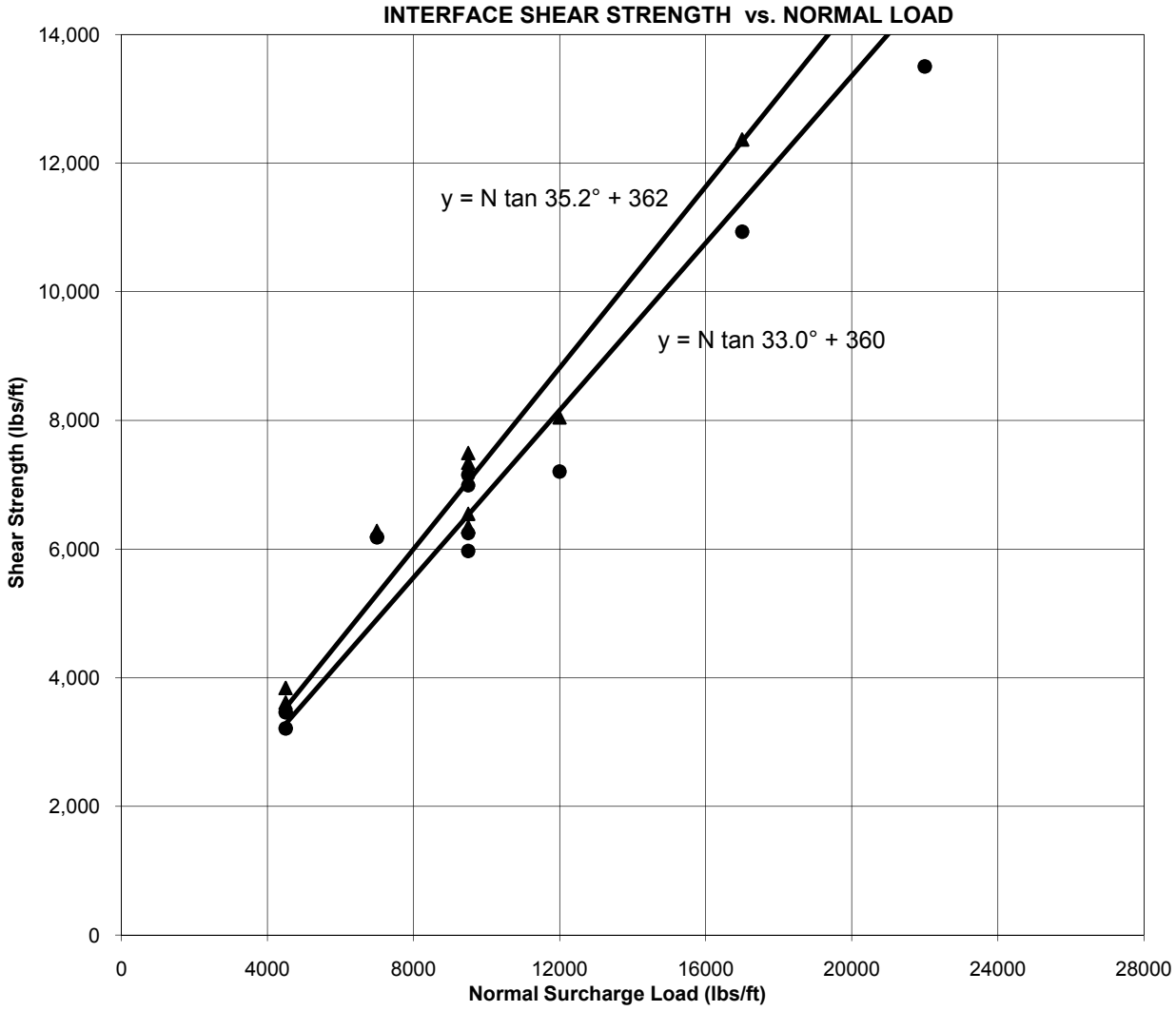

GEOGRID PULLOUT TESTS

24 SF UNITS w/ SYNTEEN SF55 GEOGRID

Trial #	Normal (lbs/ft)	Approx Wall Height (ft)	Approx # of Units	Tension @ 3/4" displ (lbs/ft)	Peak Tension (lbs/ft)
1	2,250	4.8	1.6	1,487	2,268
2	4,750	10.1	3.4	2,041	3,049
3	4,750	10.1	3.4	1,915	2,797
4	4,750	10.1	3.4	2,066	2,923
5	6,000	12.8	4.3	2,570	3,427
6	7,250	15.4	5.1	2,771	3,099
7	8,500	18.1	6.0	2,822	3,124
8	11,000	23.4	7.8	0*	3,049
9	13,500	28.7	9.6	0*	2,847

* - geogrid ruptured before reaching 3/4" displacement

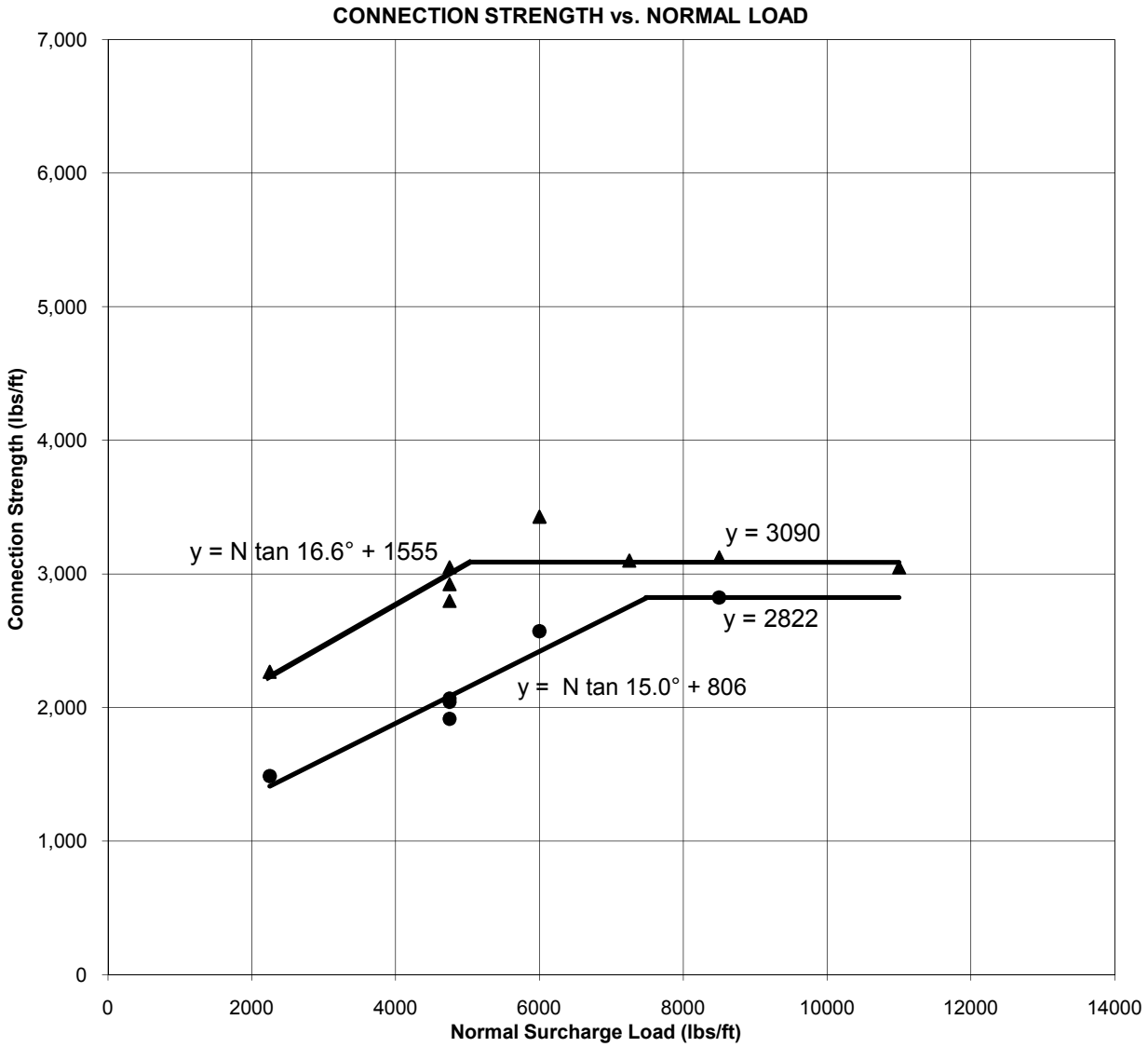

INTERFACE SHEAR TESTS

24 SF UNITS w/ SYNTEEN SF55 INCLUSION

Trial #	Normal (lbs/ft)	Approx Wall Height (ft)	Approx # of Units	Shear @ 3/4" displacement (lbs/ft)	Peak Shear (lbs/ft)
1	4,500	9.6	3.2	3,779	4,082
2	7,000	14.9	5.0	4,938	5,518
3	9,500	20.2	6.7	4,586	4,686
4	9,500	20.2	6.7	5,619	5,820
5	9,500	20.2	6.7	4,586	5,039
6	17,000	36.2	12.1	10,255	11,968
7	22,000	46.8	15.6	9,096	9,499
8	27,000	57.4	19.1	8,063	8,667
9	27,000	57.4	19.1	10,834	11,565

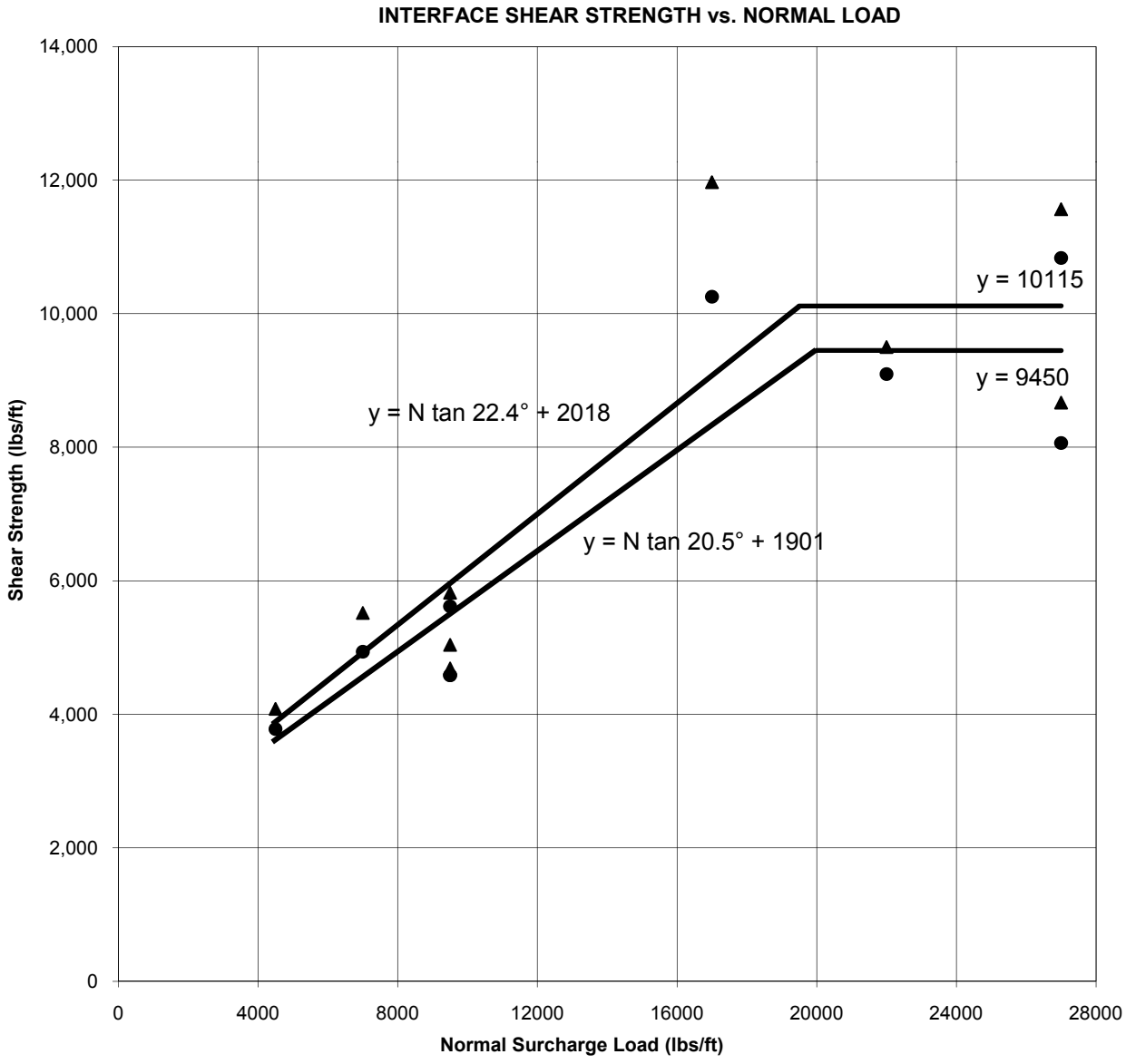

GEOGRID PULLOUT TESTS

24 SF UNITS w/ SYNTEEN SF110 GEOGRID

Trial #	Normal (lbs/ft)	Approx Wall Height (ft)	Approx # of Units	Tension @ 3/4" displ (lbs/ft)	Peak Tension (lbs/ft)
1	2,250	4.8	1.6	2,242	2,822
2	2,250	4.8	1.6	2,771	3,805
3	3,500	7.4	2.5	3,301	3,930
4	6,000	12.8	4.3	4,308	4,787
5	6,000	12.8	4.3	3,830	4,737
6	6,000	12.8	4.3	3,779	4,510
7	7,250	15.4	5.1	4,787	5,971
8	8,500	18.1	6.0	5,140	6,148
9	11,000	23.4	7.8	4,107	6,022
10	13,500	28.7	9.6	4,031	6,198

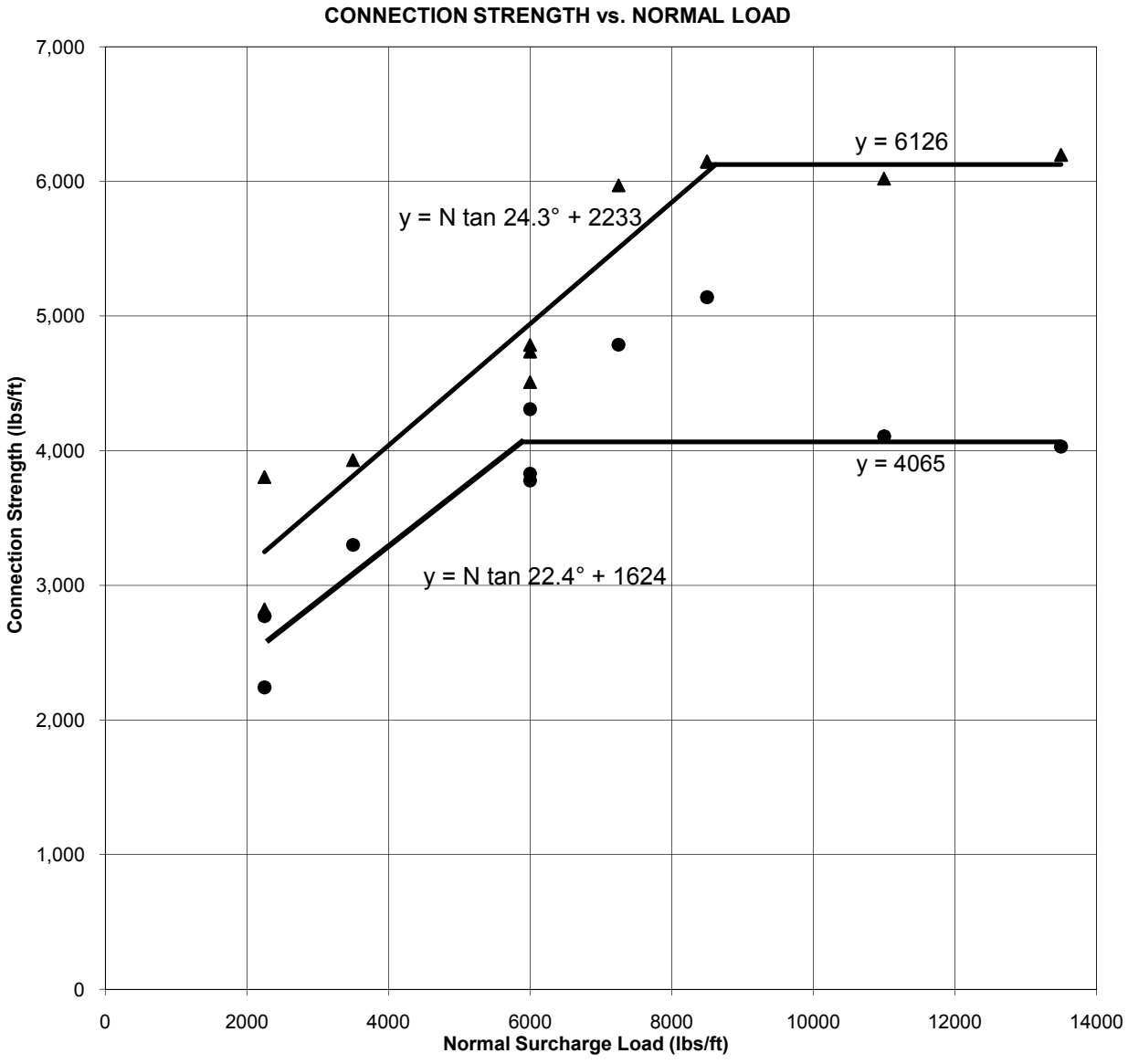

INTERFACE SHEAR TESTS

24 SF UNITS w/ SF110 INCLUSION

Trial #	Normal (lbs/ft)	Approx Wall Height (ft)	Approx # of Units	Shear @ 3/4" displacement (lbs/ft)	Peak Shear (lbs/ft)
1	4,500	9.6	3.2	2,444	2,822
2	7,000	14.9	5.0	3,250	3,754
3	9,500	20.2	6.7	5,392	5,619
4	9,500	20.2	6.7	4,913	5,089
5	9,500	20.2	6.7	4,888	5,064
6	12,000	25.5	8.5	5,089	5,719
7	14,500	30.9	10.3	5,795	6,652
8	17,000	36.2	12.1	5,820	7,407
9	19,500	41.5	13.8	7,886	8,844
10	22,000	46.8	15.6	8,516	9,171
11	27,000	57.4	19.1	9,499	10,834

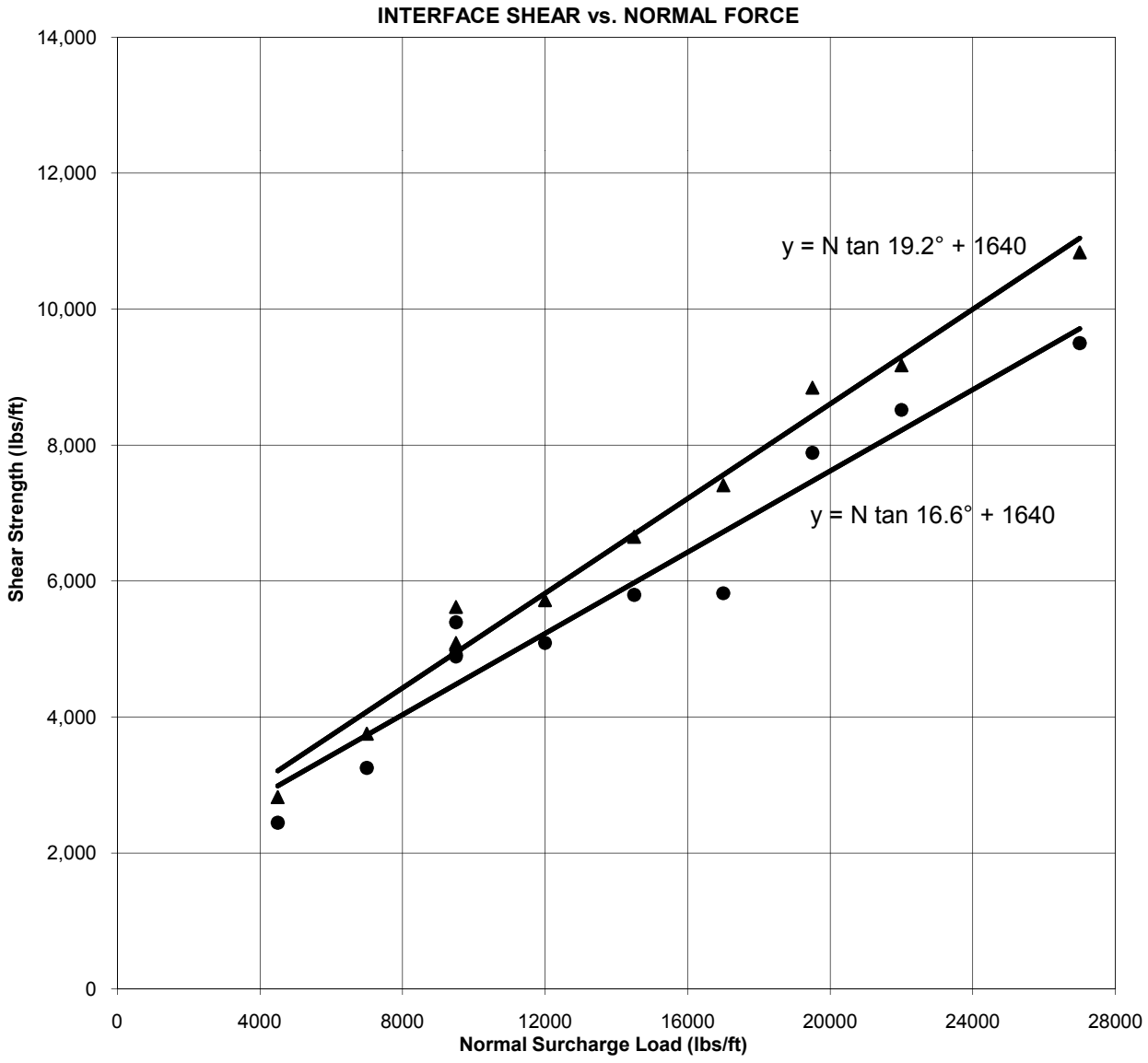

THIELE GEOTECH, INC

AGGREGATE RE[illegible]

Project	Job No.
Stone Strong Systems	02546.0
Location	**Date**
Lincoln, NE	7/31/03

US Standard Sieve No.	Cumulative Percent		Specification Percent	
	Retained	Passing	Retained	Passing
1 1/2"	0.3	99.7		
3/4"	39.4	60.6	0 to 40	60 to 100
3/8"	96.3	3.7		
# 4	96.9	3.1	60 to 100	0 to 40
# 10	97.1	2.9		
# 20	97.3	2.7		
# 40	97.5	2.5		
# 100	97.9	2.1		
# 200	98.2	1.8	95 to 100	0 to 5

Sample of: Limestone Unit Fill

Sampled at: Workman Precast from stockpile

Source:

Date Received: 7/22/03

Remarks: Dry Unit Weight by Rodding ASTM C29 90.5 pcf

Lab No._____

THIELE GEOTECH, INC

AGGREGATE RE[illegible]

Project: Stone Strong Systems

Job No.: 02546.0

Location: Lincoln, NE

Date: 8/6/03

US Standard Sieve No.	Cumulative Percent		Specification Percent	
	Retained	Passing	Retained	Passing
1 1/2"	0.0	100.0		
3/4"	33.9	66.1	0 to 40	60 to 100
3/8"	95.5	4.5		
# 4	96.4	3.6	60 to 100	0 to 40
# 10	96.6	3.4		
# 20	96.8	3.2		
# 40	96.9	3.1		
# 100	97.3	2.7		
# 200	97.5	2.5	95 to 100	0 to 5

Sample of: Limestone Unit Fill

Sampled at: Workman Precast from stockpile

Source:

Date Received:

Remarks: Sample #2

Lab No._____

THIELE GEOTECH, INC

AGGREGATE RE...

Project	Job No.
Stone Strong Systems	02546.0
Location	**Date**
Lincoln, NE	3/11/04

US Standard Sieve No.	Cumulative Percent		Specification Percent	
	Retained	Passing	Retained	Passing
1 1/2"	0.0	100.0		
3/4"	33.9	66.1	0 to 40	60 to 100
3/8"	95.5	4.5		
# 4	96.4	3.6	60 to 100	0 to 40
# 10	96.6	3.4		
# 20	96.8	3.2		
# 40	96.9	3.1		
# 100	97.3	2.7		
# 200	97.5	2.5	95 to 100	0 to 5

Sample of: Limestone Unit Fill

Sampled at: Workman Precast from stockpile

Source:

Date Received:

Remarks: Sample #3

Lab No._____

THIELE GEOTECH, INC

AGGREGATE RE...

Project	Job No.
Stone Strong Systems	02546.0
Location	**Date**
Lincoln, NE	6/1/04

US Standard Sieve No.	Cumulative Percent		Specification Percent	
	Retained	Passing	Retained	Passing
1 1/2"	0.0	100.0		
3/4"	5.4	94.6	0 to 40	60 to 100
3/8"	44.9	55.1		
# 4	81.3	18.7	60 to 100	0 to 40
# 10	89.4	10.6		
# 20	92.1	7.9		
# 40	93.3	6.7		
# 100	94.4	5.6		
# 200	94.9	5.1	95 to 100	0 to 5

Sample of: Limestone Unit Fill

Sampled at: Workman Precast from stockpile

Source:

Date Received: 5/25/04

Remarks: Sample #4

Lab No. G825

Tadros Associates, LLC
Structural Engineering Consultants

thiele geotech inc TG

Interaction Testing Report

6 SF Units with Synteen Geogrids

Stone Strong Systems
Lincoln, Nebraska

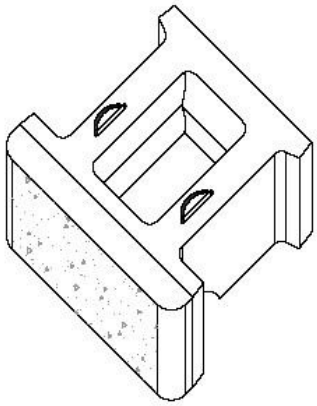

Prepared for:
Stone Strong Systems
3801 Union Drive, Suite 102
Lincoln, Nebraska 68516

May 27, 2005
TG Project No. 02546.2

THIELE GEOTECH, INC
13478 Chandler Road
Omaha, Nebraska 68138-3716
402/556-2171 Fax 402/556-7831
www.thielegeotech.com

In association with:
TADROS ASSOCIATES, LLC
6910 Pacific Street, Suite 204
Omaha, Nebraska 68106-1045

Interaction Testing Report
6 SF Units with Synteen Geogrids

Table of Contents

INTRODUCTION **1**

MATERIALS **2**

TEST PROCEDURES **3**
TEST FRAME 3
INTERFACE SHEAR TESTS 3
CONNECTION STRENGTH PULLOUT TESTS 4

TEST RESULTS **5**
INTERFACE SHEAR TESTS 5
CONNECTION STRENGTH PULLOUT TESTS 5
CONCLUSIONS 6

APPENDIX

INTRODUCTION

Thiele Geotech, Inc., in association with Tadros Associates, LLC, has completed an interaction testing program to evaluate the interface shear capacity and the connection strength between Stone Strong Systems 6 SF precast concrete segmental retaining wall blocks and Synteen SF55 and SF110 geogrids used in the construction of segmental retaining walls. The results of the testing program were used to define relationships for surcharge load representing stacked Stone Strong units with facing/geogrid connection strength and with interface shear strength both with and without geogrid inclusions.

Due to the large size of the Stone Strong blocks, a custom testing frame was designed by Tadros Associates, LLC. This large test frame accommodates full scale tests under conditions that reproduced field shear and connection conditions. Testing was performed by personnel from Tadros Associates and Thiele Geotech.

MATERIALS

Stone Strong Systems 6 SF blocks are precast concrete blocks used for construction of segmental retaining walls. These units are typically used as accessories with the 24 SF blocks to make elevation transitions, but they are sometimes used as a stand-alone product to construct tight radius curves or for other special applications.

The 6 SF unit has nominal face dimensions of 48 inches long and 18 inches tall for a total face area of 6 square feet. The unit has a depth (measured horizontally from the face to the tail) of approximately 44 inches. The units have dual center webs, and the face and tail flanges extend beyond the webs. The rear flange is tapered to allow the blocks to be laid on a curve. Each unit weighs approximately 1,450 to 1,550 pounds empty, depending on the aggregate used to manufacture the block. When installed in a retaining wall, the block voids are filled with aggregate. The infilled weight is approximately 2,550 to 2,850 pounds, depending on the unit weights of the concrete and aggregate fill.

Synteen SF55 and SF110 geogrids are uni-directional grids composed of high strength polyester yarns coated with a PVC material. The SF55 and SF110 Geogrids have average ultimate tensile strengths of 3,774 pounds per foot and 10,212 pounds per foot, respectively, based on published test data.

TEST PROCEDURES

TEST FRAME

The apparatus used to conduct the tests consisted of a steel frame anchored to a rigid concrete mat foundation. The frame is capable of applying 150,000 pounds of surcharge load and 100,000 pounds of shear/pullout force simultaneously. Rollers were mounted between the test frame and the loading beam to allow for block movement during shear testing. Photographs and schematics of the test frame are included in the Appendix of this report.

Surcharge and shear/pullout loads were placed on the blocks using two (2) Enerpac PEJ-1301 submerged hydraulic pumps capable of delivering 20 in^3 per minute at 10,000 psi each. Loads were measured by the use of Omega PX303 pressure transducers with 0 to 10,000 psig range and an accuracy of 0.25 percent FS. Mounted on each pump is a manifold to distribute hydraulic fluid to the two (2) 25 ton, 6 inch stroke (Enerpac RC256) surcharge actuators and the two (2) 25 ton, 6 inch stroke (Enerpac RC256) shear/pullout actuators and to the pressure transducers. The flow of fluid to the shear/pullout actuators is adjustable by an Enerpac V-8F needle valve.

Displacements were measured by the use of two (2) 3 inch stroke and one (1) 6 inch stroke linear potentiometers with 0.15 percent maximum linearity (0.07 percent typical) and less than 0.01 mm hysteresis.

Loads and displacements were continuously measured and recorded during the test by a Data Translation DT9802 date acquisition module connected to a laptop computer via USB interface. Sensor excitation was provided by an Omega 5v regulated power supply. Loads and displacements were recorded a minimum of once per second using DT Measure Foundry software.

INTERFACE SHEAR TESTS

The NCMA SRWU-2 and ASTM D6638 methods of test were used to determine the shear strength between Stone Strong Systems 6 SF concrete block units. The tests were carried out with and without a layer of geosynthetic reinforcement between layers of Stone Strong units. Six bottom blocks were installed and braced against the front of the load frame. Crushed limestone infill was placed in the voids between the bottom blocks. When a geogrid layer was included, the geosynthetic reinforcement was centered over the bottom blocks. Three Stone Strong units were stacked in a running bond and centered over the bottom blocks. Crushed limestone infill was placed in the voids between the top blocks.

The top unit was loaded with a constant vertical surcharge load applied to the concrete webs, simulating an equivalent height of stacked blocks. The shear force was applied at a constant rate of displacement until large shear displacements were achieved. The load and displacements were

continuously measured and recorded during the test by a microcomputer/data acquisition system. The tests were continued until failure of the interface components occurred, causing a sustained loss of shearing resistance, or to a displacement of 1½ inches.

CONNECTION STRENGTH PULLOUT TESTS

The NCMA SRWU-1 and ASTM D6638 methods of test were used to determine the connection strength between geosynthetic reinforcement and Stone Strong Systems 6 SF concrete block units. The tests were carried out with a layer of geosynthetic reinforcement between layers of Stone Strong units. Four bottom blocks were installed and braced against the back of the load frame. Crushed limestone infill was placed in the voids between the bottom blocks. The geosynthetic reinforcement was centered over the bottom blocks and attached to a clamping device. The top layer of Stone Strong units was placed over the geogrid and centered over the bottom block layer. Crushed limestone infill was placed in the voids between the top blocks, and the blocks were braced against the back of the frame.

The top units were loaded with a constant vertical surcharge load applied to the concrete webs, simulating an equivalent height of stacked blocks. A tensile force was placed on the geosynthetic reinforcement under constant rate of displacement until failure of the connection system occurred. The load and displacements were continuously measured and recorded during the test by a microcomputer/data acquisition system. Tests were continued until failure occurred as excessive deformation or slippage of the geogrid in the connection or failure of the blocks occurred, causing a sustained loss of tensile resistance recorded.

TEST RESULTS

INTERFACE SHEAR TESTS

Results of the interface shear tests are attached in tables and graphs recorded in the Appendix of this report. The peak interface shear capacity and shear capacity at the displacement criterion of ¾ inch were plotted versus the normal load. The peak interface shear strength between Stone Strong Systems 6 SF units and Synteen SF110 Geogrid for equivalent wall heights between 4.3 and 32.6 feet high ranged between 2,100 and 12,228 pounds per foot. Tests repeated using the same normal load had peak shear capacity values within 10 percent of the mean peak shear capacity of the identical tests; therefore, they are within the NCMA recommended limits for demonstrating test repeatability. The service state criterion is defined as the load at ¾ inch deflection.

Lines were best fit to the test data for the individual tests series. Interface shear properties were interpolated from the data, and are summarized in Table 1.

Table 1, Interface Shear Properties

Case	Ultimate			Service State Criterion		
	Minimum (lbs/ft)	**Friction Angle (degrees)**	**Maximum (lbs/ft)**	**Minimum (lbs/ft)**	**Friction Angle (degrees)**	**Maximum (lbs/ft)**
Block shear (no geogrid)	1,309	36.4	12,228	1,257	35.0	12,000
Shear w/ SF110 inclusion	1,271	20.2	7,038	1,036	17.0	6,198

The peak interface shear strength between Stone Strong Systems 6 SF units and Synteen SF55 Geogrid was not tested. During testing of the Stone Strong Systems 24 SF units, it was found that interface shear strengths were generally better with the Synteen SF55 Geogrid than with the Synteen SF110 Geogrid. Therefore, when using the 6 SF units with Synteen SF55 Geogrid, the interface shear test data for 6 SF units with Synteen SF110 Geogrid should be used for analysis.

CONNECTION STRENGTH PULLOUT TESTS

Results of the connection strength tests are summarized in tables and graphs recorded in the Appendix of this report. The peak connection capacity and connection capacity at the displacement criterion of ¾ inch were plotted versus the normal load. The recorded peak connection strengths between Stone Strong Systems 6 SF units and Synteen SF55 and SF110 Geogrid were 2,428 and 4,690 pounds per foot, respectively, for equivalent wall heights between 4.3 and 36.2 feet high. Tests repeated using the same normal load had peak shear capacity values within 10 percent of the mean peak shear capacity of

the identical tests; therefore, they are within the NCMA recommended limits for demonstrating test repeatability.

Lines were best fit to the test data for the individual tests series. Interface shear properties were interpolated from the data, and are summarized in Table 2.

Table 2, Connection Strength Properties

Case	Ultimate			Service State Criterion		
	Minimum (lbs/ft)	**Friction Angle (degrees)**	**Maximum (lbs/ft)**	**Minimum (lbs/ft)**	**Friction Angle (degrees)**	**Maximum (lbs/ft)**
Connection Strength w/ SF55 Geogrid	1,743	9.5	2,210	993	9.4	1,390
Connection Strength w/ SF110 Geogrid	1,765	12.1	4,690	1,238	9.5	3,614

CONCLUSIONS

The design curves illustrated on the graphs in the appendix are based on interpretation of the test data, based on the NCMA Segmental Retaining Wall Design Manual. The design curves are controlled by the ¾ inch displacement criterion. The design values taken from the graphs should be used with caution, as shear and connection strengths may vary based on actual site conditions and construction quality.

Respectfully submitted,
Thiele Geotech, Inc.

Daniel J. Thiele, P.E.

P:\02546.2\REPORT - 6 SF WITH SYNTEEN.DOC

APPENDIX

Test Setup

Photographs

Interface Shear Test Results

SF55 Pullout Results

SF110 Pullout Results

SF110 Interface Shear Results

Aggregate Test Reports

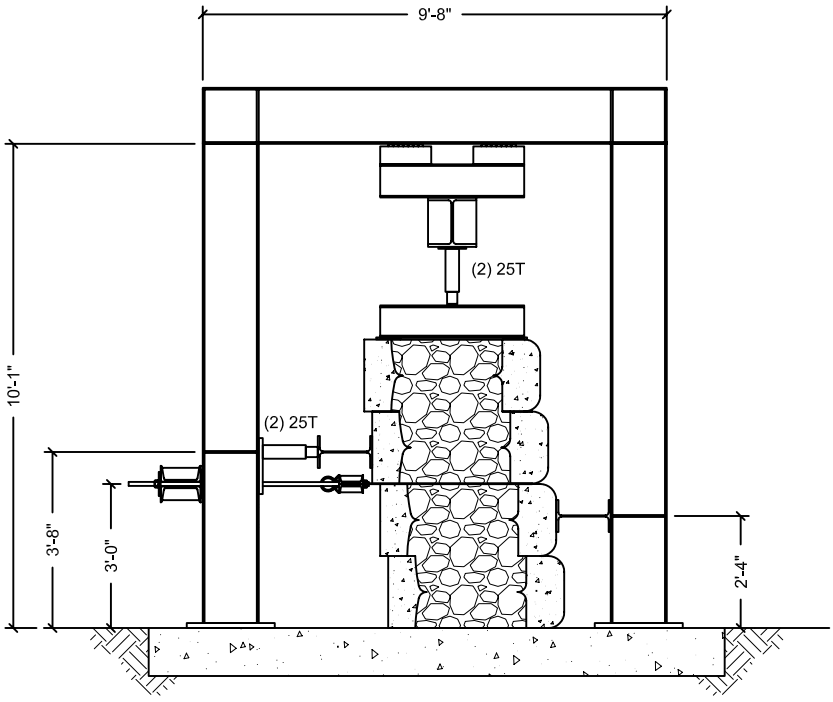

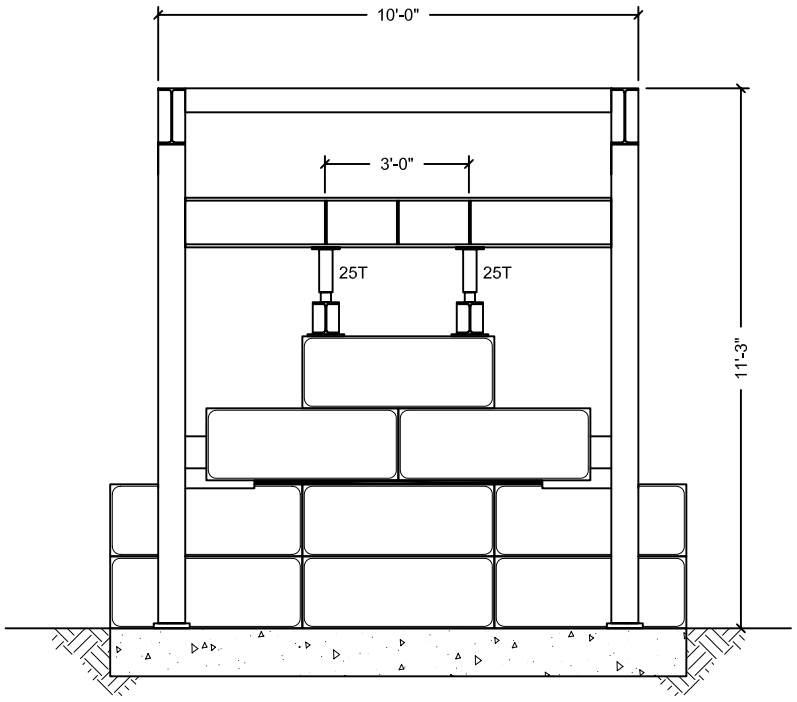

Tadros Associates, LLC
6910 Pacific Street, Suite 204, Omaha, NE 68106
Phone: (402) 553-0234 Fax: (402) 553-0201

Project: SSS Grid Testing	Project No.: NE058-04P01	Designed By:	Rev.:	
	Date: 11/03/04	Checked By:	Rev. Date:	
Title: Shear Frame Setup	Scale: None	Detailed By: NAM	Page: 475	

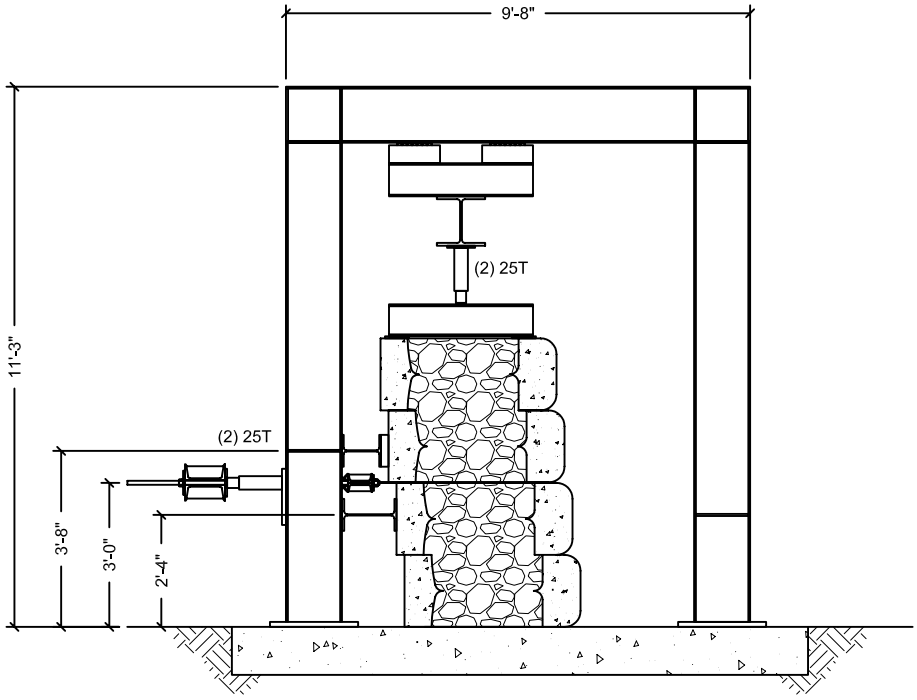

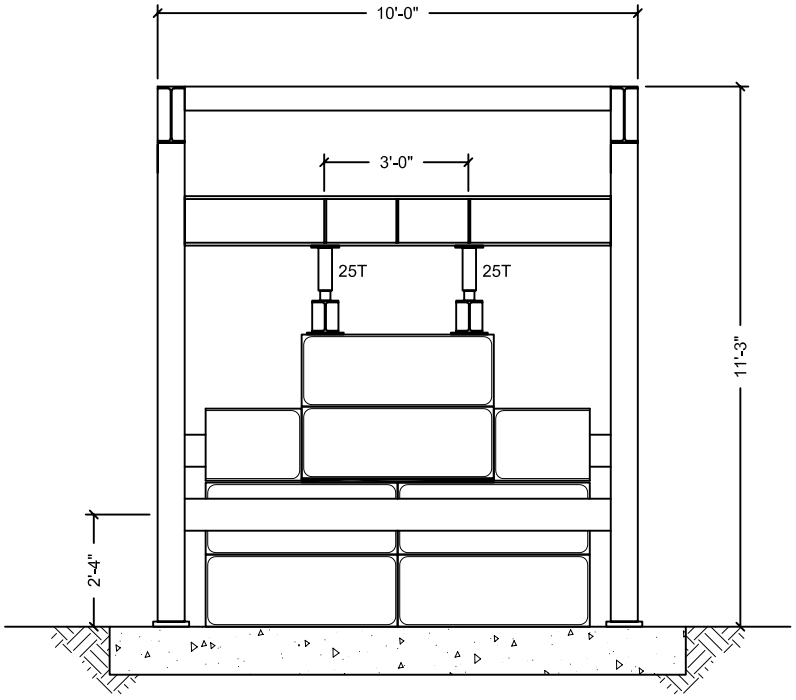

Tadros Associates, LLC
6910 Pacific Street, Suite 204, Omaha, NE 68106
Phone: (402) 553-0234 Fax: (402) 553-0201

Project: SSS Grid Testing	Project No.: NE058-04P01	Designed By:	Rev.:	
	Date: 11/03/04	Checked By:	Rev. Date:	
Title: Grid Pullout Frame Setup	Scale: None	Detailed By: NAM	Page: 476	

6SF Block Shear

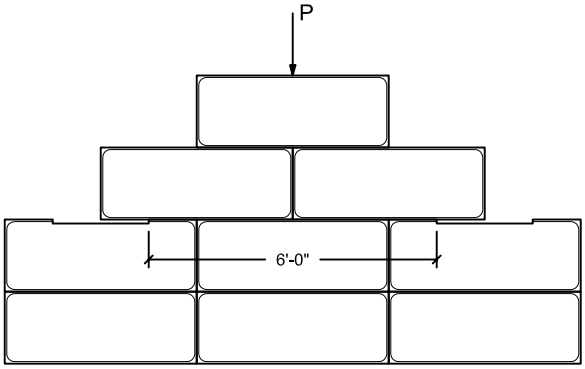

$$\text{Normal Force } \left(\frac{\text{kips}}{\text{ft}}\right) = \frac{\text{P kips}}{\text{6 ft}}$$

$$\text{Shear Force } \left(\frac{\text{kips}}{\text{ft}}\right) = \frac{\text{V kips}}{\text{6 ft}}$$

6SF Grid Shear

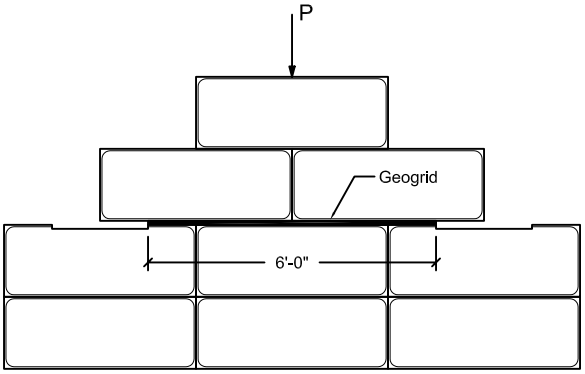

$$\text{Normal Force } \left(\frac{\text{kips}}{\text{ft}}\right) = \frac{\text{P kips}}{\text{6 ft}}$$

$$\text{Shear Force } \left(\frac{\text{kips}}{\text{ft}}\right) = \frac{\text{V kips}}{\text{6 ft}}$$

6SF Grid Pullout

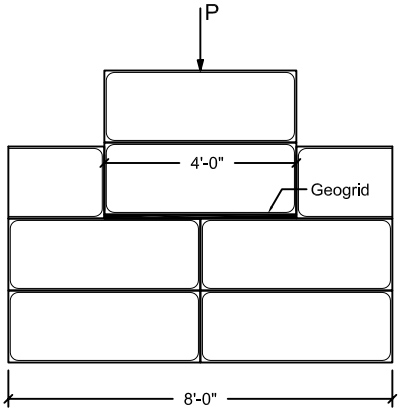

$$\text{Normal Force } \left(\frac{\text{kips}}{\text{ft}}\right) = \frac{\text{P kips}}{\text{4 ft}}$$

$$\text{Grid Pullout } \left(\frac{\text{kips}}{\text{ft}}\right) = \frac{\text{T kips}}{\text{4 ft}}$$

Tadros Associates, LLC
6910 Pacific Street, Suite 204, Omaha, NE 68106
Phone: (402) 553-0234 Fax: (402) 553-0201

Project: SSS Grid Testing	Project No.: NE058-04P01	Designed By:	Rev.:
	Date: 11/03/04	Checked By:	Rev. Date:
Title: Test Setup	Scale: None	Detailed By: NAM	Page: 477

PHOTO NUMBER 1
Front View of Test Setup

PHOTO NUMBER 2
Side View of Test Setup

INTERFACE SHEAR TESTS
6 SF UNITS

Trial #	Normal (lbs/ft)	Approx Wall Height (ft)	Approx # of Units	Shear @ 3/4" displacement (lbs/ft)	Peak Shear (lbs/ft)
1	2,000	4.3	1.4	2,284	2,385
2	3,667	7.8	2.6	3,561	3,763
3	5,333	11.3	3.8	5,190	5,543
4	7,000	14.9	5.0	6,316	6,316
5	7,000	14.9	5.0	6,383	6,500
6	7,000	14.9	5.0	6,517	6,668
7	7,000	14.9	5.0	6,887	7,156
8	8,667	18.4	6.1	7,945	7,945
9	10,333	22.0	7.3	7,609	8,634
10	12,000	25.5	8.5	9,306	9,944
11	13,667	29.1	9.7	10,767	11,304
12	15,333	32.6	10.9	12,000	12,228

INTERFACE SHEAR STRENGTH vs. NORMAL LOAD

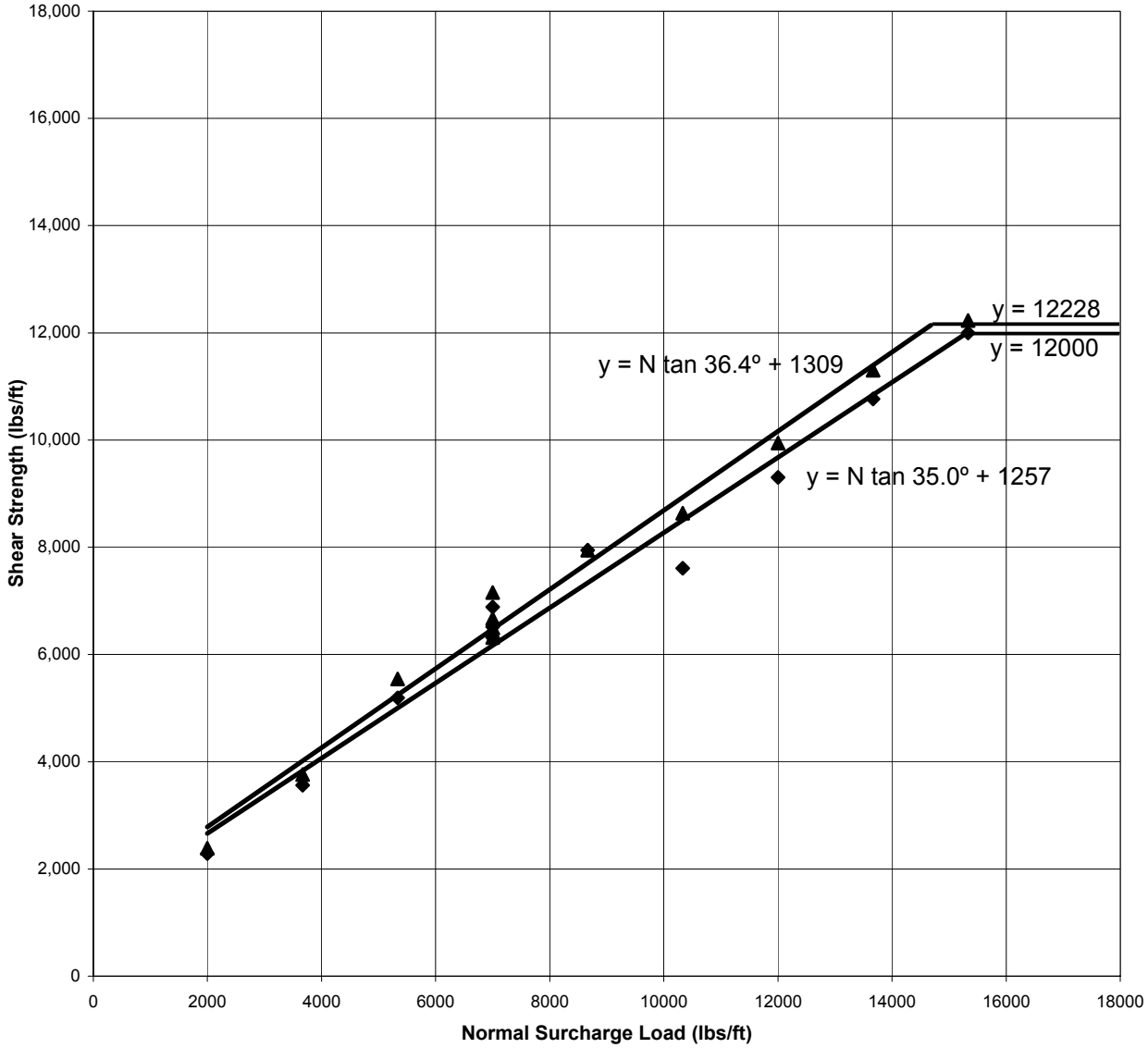

GEOGRID PULLOUT TESTS

6 SF UNITS w/ SYNTEEN SF55 GEOGRID

Trial #	Normal (lbs/ft)	Approx Wall Height (ft)	Approx # of Units	Tension @ 3/4" displ (lbs/ft)	Peak Tension (lbs/ft)
1	2,000	4.3	1.4	1,324	2,042
2	3,667	7.8	2.6	1,600	2,290
3	5,333	11.3	3.8	1,214	1,959
4	7,000	14.9	5.0	1,186	2,097
5	7,000	14.9	5.0	1,268	2,162
6	7,000	14.9	5.0	1,462	2,235
7	8,667	18.4	6.1	1,352	2,152
8	10,333	22.0	7.3	1,352	2,207
9	13,667	29.1	9.7	1,628	2,428

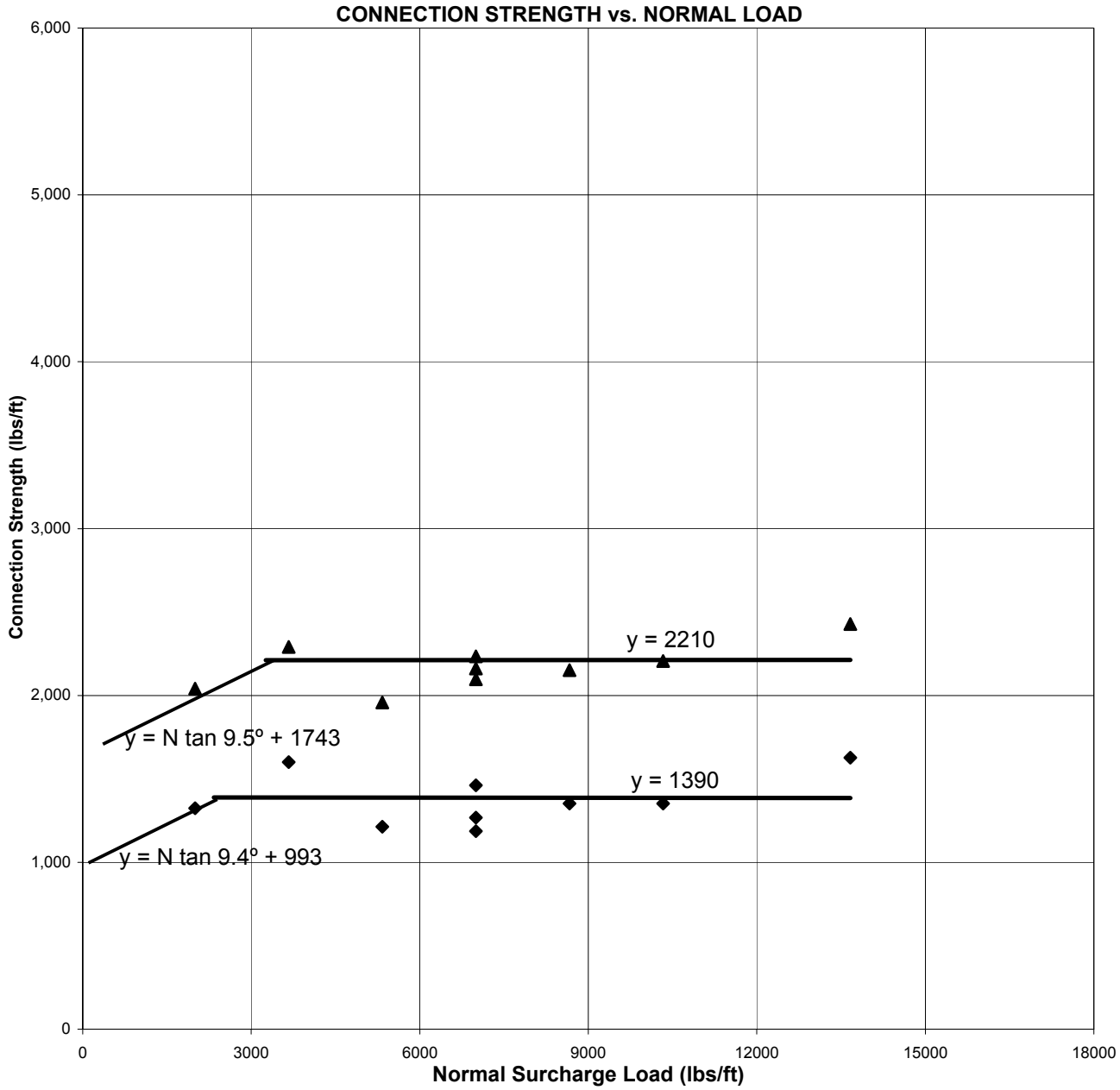

GEOGRID PULLOUT TESTS

6 SF UNITS w/ SYNTEEN SF110 GEOGRID

Trial #	Normal (lbs/ft)	Approx Wall Height (ft)	Approx # of Units	Tension @ 3/4" displ (lbs/ft)	Peak Tension (lbs/ft)
1	2,000	4.3	1.4	1,821	2,235
2	3,667	7.8	2.6	2,124	3,035
3	5,333	11.3	3.8	1,987	3,062
4	7,000	14.9	5.0	1,961	2,759
5	7,000	14.9	5.0	2,314	3,274
6	7,000	14.9	5.0	2,262	2,897
7	10,333	22.0	7.3	2,952	3,807
8	13,667	29.1	9.7	3,807	5,104
9	17,000	36.2	12.1	3,614	4,690

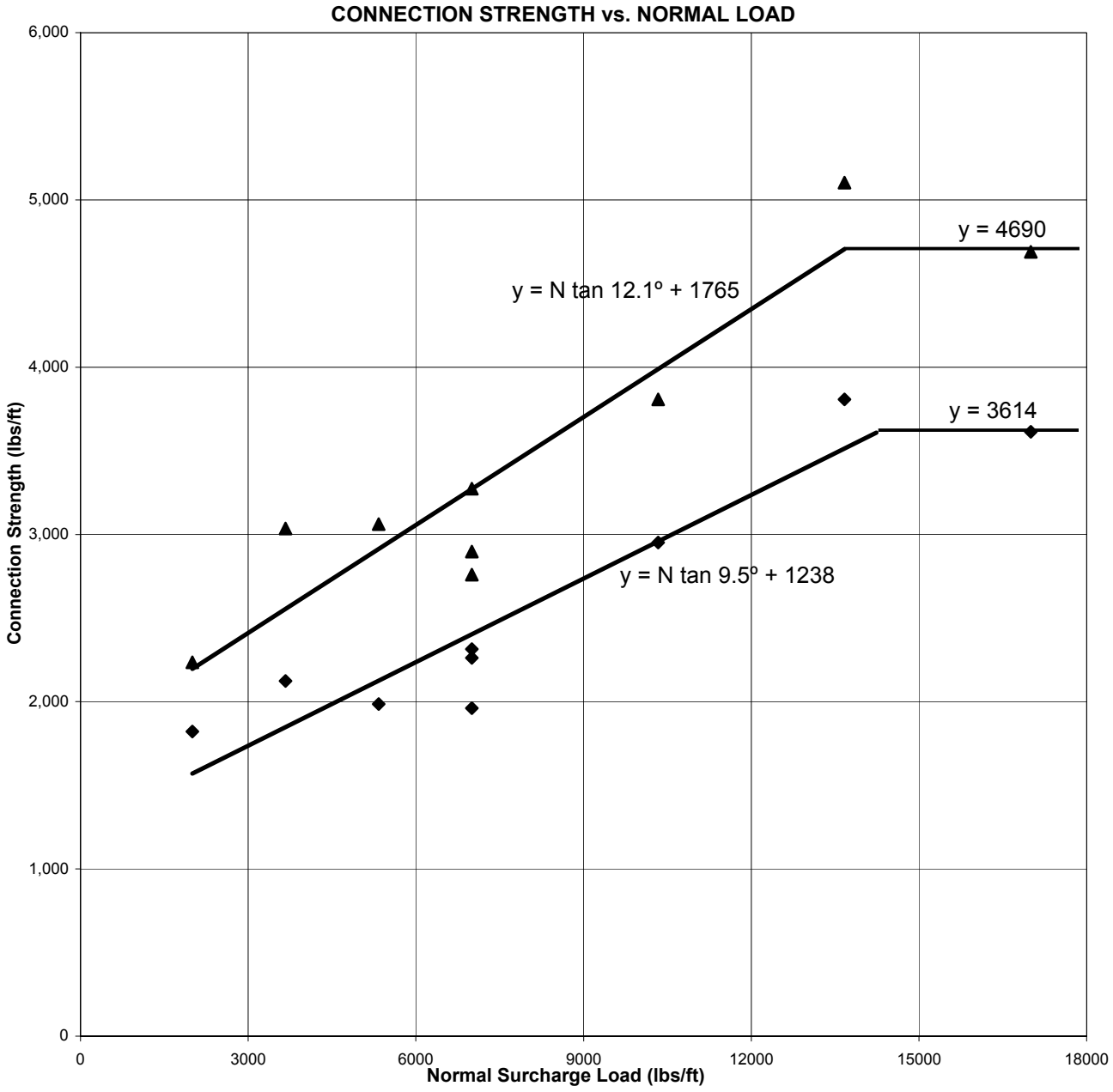

INTERFACE SHEAR TESTS
6 SF UNITS w/ SF110 INCLUSION

Trial #	Normal (lbs/ft)	Approx Wall Height (ft)	Approx # of Units	Shear @ 3/4" displacement (lbs/ft)	Peak Shear (lbs/ft)
1	2,000	4.3	1.4	1,814	2,100
2	3,667	7.8	2.6	2,352	2,520
3	5,333	11.3	3.8	2,721	3,225
4	7,000	14.9	5.0	3,611	3,796
5	7,000	14.9	5.0	3,595	3,914
6	7,000	14.9	5.0	3,410	3,460
7	8,667	18.4	6.1	4,199	5,039
8	10,333	22.0	7.3	4,115	4,922
9	12,000	25.5	8.5	5,493	5,677
10	13,667	29.1	9.7	5,896	6,249
11	15,333	32.6	10.9	6,198	7,038

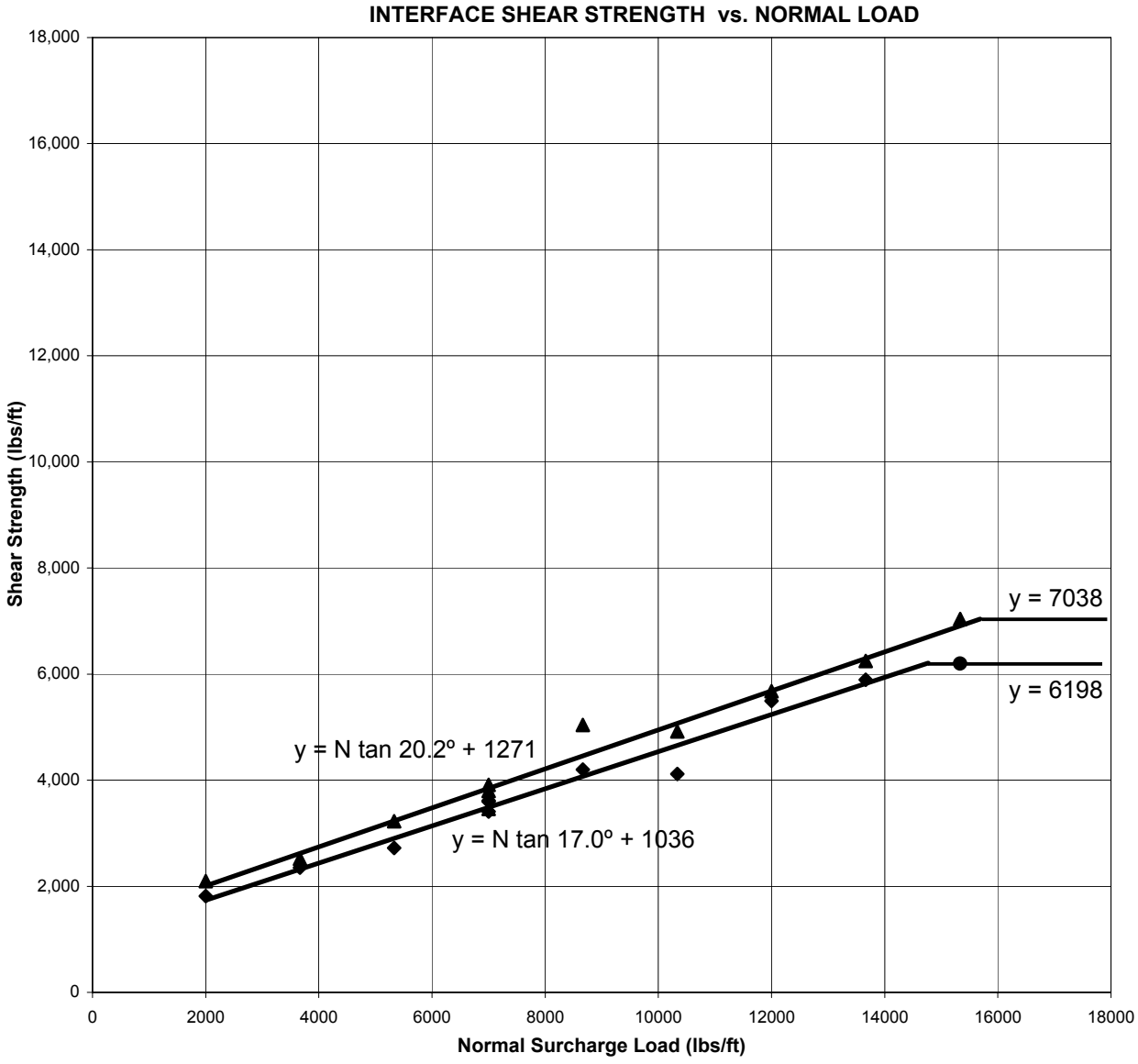

THIELE GEOTECH, INC

AGGREGATE RE...

Project	Job No.
Stone Strong Systems	02546.0
Location	**Date**
Lincoln, NE	6/1/04

US Standard Sieve No.	Cumulative Percent		Specification Percent	
	Retained	Passing	Retained	Passing
1 1/2"	0.0	100.0		
3/4"	5.4	94.6	0 to 40	60 to 100
3/8"	44.9	55.1		
# 4	81.3	18.7	60 to 100	0 to 40
# 10	89.4	10.6		
# 20	92.1	7.9		
# 40	93.3	6.7		
# 100	94.4	5.6		
# 200	94.9	5.1	95 to 100	0 to 5

Sample of: Limestone Unit Fill

Sampled at: Workman Precast from stockpile

Source:

Date Received: 5/25/04

Remarks: Sample #4

Lab No. G825

1.1.11 ALIGNMENT DETAILS

No attachments

© Stone Strong Systems

1.1.12 FILTRATION

No attachments

© Stone Strong Systems

1.1.13 FACE PATTERNS

No attachments

© Stone Strong Systems

1.1.14 CURVES AND CORNERS

No attachments

© Stone Strong Systems

1.2.1 REINFORCEMENT INNOVATIONS

No attachments

© Stone Strong Systems

1.2.2 REINFORCEMENT TYPE

No attachments

© Stone Strong Systems

1.2.3 REINFORCEMENT PROPERTIES

Technical Data Sheet – Paraweb 2, 11/2/15

Note: The letter designations (E, D, & S) on the data sheet designate the sheath thickness over the yarn bundles. In most applications, Stone Strong utilizes 2D-50 reinforcement straps.

© Stone Strong Systems

PARAWEB™2

GEOSYNTHETICS REINFORCEMENT STRIP

ParaWeb™ 2 range is manufactured from high tenacity, mutifilament polyester yarns aligned and co-extruded with polyethylene (LLDPE) to form polymeric strips. ParaWeb™ strips are planar structures consisting of a core of high tenacity polyester yarn tendons encased in a polyethylene (LLDPE) sheath; it enables **ParaWeb™ 2** range to be used as reinforcement of contaminated or high aggressive materials for use in environmental applications. The strips are suitable for reinforcement applications in combination with concrete wall facing panels. The **ParaWeb™ 2** range has been tested internally and independently (NTPEP) in accordance to published standards and will conform to the property values listed below.

PARAWEB 2E		30	40	50	75	100	
MECHANICAL PROPERTIES							
Ultimate Tensile Strength (ASTM 6637)	lb	**6744**	**8992**	**11240**	**16861**	**22481**	1
Creep Reduced Strength @100y, 20°C	lb	**4958**	**6611**	**8264**	**12397**	**16530**	1
Long term Design Strength (AASHTO LRFD)	lb	**4087**	**5449**	**6812**	**10218**	**13624**	1, 2
PHYSICAL PROPERTIES (nominal values)							
Strip width & thickness	in	3.27 / 0.06	3.27 / 0.07	3.43 / 0.08	3.54 / 0.10	3.54 / 0.12	4
Strip weight	lb/328ft	19.18	24.03	27.34	39.46	53.13	4

PARAWEB 2D		30	40	50	75	100	
MECHANICAL PROPERTIES							
Ultimate Tensile Strength (ASTM 6637)	lb	**6744**	**8992**	**11240**	**16861**	**22481**	1
Creep Reduced Strength @100y, 20°C	lb	**4958**	**6611**	**8264**	**12397**	**16530**	1
Long term Design Strength (AASHTO LRFD)	lb	**4087**	**5449**	**6812**	**10218**	**13624**	1, 2
PHYSICAL PROPERTIES (nominal values)							
Strip width & thickness	in	3.27 / 0.07	3.31 / 0.09	3.54 / 0.10	3.54 / 0.12	3.54 / 0.15	4
Strip weight	lb/328ft	28.00	36.82	42.99	56.44	68.56	4

PARAWEB 2S		30	40	50	75	100	
MECHANICAL PROPERTIES							
Ultimate Tensile Strength (ASTM 6637)	lb	**7550**	**10067**	**13584**	**18876**	**25168**	1
Creep Reduced Strength @100y, 20°C	lb	**5551**	**7402**	**9988**	**13879**	**18505**	1
Long term Design Strength (AASHTO LRFD)	lb	**4575**	**6101**	**8232**	**11440**	**15253**	1, 3
PHYSICAL PROPERTIES (nominal values)							
Strip width & thickness	in	3.35 / 0.09	3.35 / 0.10	3.54 / 0.14	3.54 / 0.16	3.54 / 0.24	4
Strip weight	lb/328ft	32.63	40.79	50.71	66.14	83.11	4

1. Minimum average roll values (MARV) are calculated as typical minus two standard deviations. Statistically, it yields a 97.7% degree of confidence that any samples taken from quality assurance testing will exceed the value reported;
2. LTDS calculated for a standard temperature of 20°C, 4≤ph≤9 in coarse gravel soil; on request more data available;
3. As above but for 9<ph≤11; product for lime-soil mix applications and aggressive environments.
4. Width, thickness and weight values per roll are nominal a tolerance of 5% on the reported value is admitted.

Maccaferri can engineer specific solutions in any of our products; please contact us for specific solution targeted to your project.

NTPEP CERTIFIED MATERIAL

AASHTO NATIONAL TRANSPORTATION PRODUCT EVALUATION PROGRAM

Disclaimer: The short term and long term mechanical properties listed in this TDS are in compliance with the Paraweb™ NTPEP certifications and AASHTO LRFD regulation; it means that different values can be reported in other TDS not because not accurate but simply because listed following different testing method or different standards.

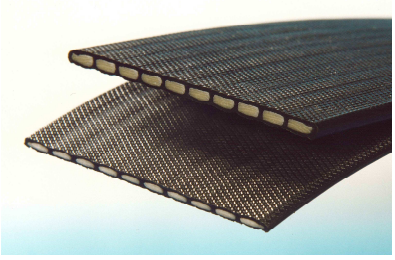

Maccaferri reserves the right to amend product specifications without notice and specifiers are requested to check as to the validity of the pecifications they are using.

Maccaferri, Inc.
10303 Governor Lane Blvd., Williamsport, MD 21795
Tel. (800) 638-7744 - Fax (301) 223-4590
E-mail: info@maccaferri-usa.com - Web site: www.maccaferri-usa.com

Area Offices:
Phoenix, Arizona
Sacramento, California
Miami, Florida
St. Louis, Missouri
Trenton, New Jersey
Albuquerque, New Mexico
Caguas, Puerto Rico
Dallas/Ft. Worth, Texas

© 2014 Maccaferri. All rights reserved. Maccaferri will enforce Copyright.

1.2.4 NTPEP REPORT

NTPEP Report REGEO-2016-01, Laboratory Evaluation of Geosynthetic Reinforcement, August 2018

© Stone Strong Systems

2018 NTPEP Report Series

NTPEP Report REGEO-2016-01-[Linear Composites-ParaWeb-ParaLink]

LABORATORY EVALUATION OF GEOSYNTHETIC REINFORCEMENT

FINAL PRODUCT QUALIFICATION REPORT FOR LINEAR COMPOSITES PARAWEB AND PRODUCT LINES

Report Issued: August 2018
Report Expiration Date: August 2024
Next Quality Assurance Update Report: 2021

American Association of State Highway and Transportation Officials (AASHTO)

Executive Office: 444 North Capitol Street, NW, Suite 249 • Washington, DC • 20001
(t) 202.624.5800 • (f) 202.624.5469 • www.NTPEP.ORG

DOWNLOAD DATA FILES FOR THIS NTPEP REPORT @ NTPEP.org

2018 NTPEP Report Series

National Transportation Product Evaluation Program (NTPEP)

NTPEP Report REGEO-2016-01-[Linear Composites-ParaWeb-ParaLink]

LABORATORY EVALUATION OF GEOSYNTHETIC REINFORCEMENT

2016 PRODUCT SUBMISSIONS
SAMPLED JANUARY 2017

Laboratory Evaluation by:

TRI/Environmental, Inc.
9063 Bee Caves Road
Austin, TX 78733-6201

Product Line Manufactured by:

Linear Composites Limited
Vale Mills, Oakworth, Keighley
West Yorkshire, UK BD22 0EB

© Copyright 2011, by the American Association of State Highway and Transportation Officials (AASHTO). *All Rights Reserved.* Printed in the United States of America. This book or parts thereof, may not be reproduced without express written permission of the publisher. The report does not constitute an endorsement by AASHTO of the products contained herein. This report provides an original source of technical information to facilitate development of acceptability standards and is primarily intended for use by state and local transportation agencies.

DOWNLOAD DATA FILES FOR THIS NTPEP REPORT @ NTPEP.org

PROLOGUE

General Facts about NTPEP Reports:

- NTPEP Reports contain data collected according to laboratory testing and field evaluation protocols developed through consensus-based decision by the AASHTO's NTPEP Oversight Committee. These test and evaluation protocols are described in the *Project Work Plan* (see NTPEP website).
- Products are voluntarily submitted by manufacturers for testing by NTPEP. Testing fees are assessed from manufacturers to reimburse AASHTO member departments for conducting testing and to report results. AASHTO member departments provide a voluntary yearly contribution to support the administrative functions of NTPEP.
- AASHTO/NTPEP does not endorse any manufacturer's product over another. Use of certain proprietary products as "primary products" does not constitute endorsement of those products.
- AASHTO/NTPEP does not issue product approval or disapproval; rather, test data are furnished for the User to make judgment for product prequalification or approval for their transportation agency.

Guidelines for Proper Use of NTPEP Results:

- The User is urged to carefully read any introductory notes at the beginning of this Report, and also to consider any special clauses, footnotes or conditions which may apply to any test reported herein. Any of these notes may be relevant to the proper use of NTPEP test data.
- The User of this Report must be sufficiently familiar with the product performance requirements and/or (standard) specification of their agency in order to determine which test data are relevant to meeting those qualifying factors.
- NTPEP test data is intended to be predictive of actual product performance. Where a transportation agency has successful historical experience with a given product, it is suggested to factor that precedence in granting or withholding product approval or prequalification.

NTPEP Report Special Advisory for Geosynthetic Reinforcement (REGEO):

- This report contains product data that are intended to be applied to a product line, based on the test results obtained for specific products that are used to represent the product line for the purposes of NTPEP testing. It is expected that the User will estimate the properties of specific products in the line not specifically tested through interpolation or a lower or upper bound approach.
- It is intended that this data be used by the User to add products to their Qualified Products or Approved Products List, and/or to develop geosynthetic reinforcement strength design parameters in accordance with AASHTO, FHWA, or other widely accepted design specifications/guidelines. It is also intended that the User will conduct further, but limited, evaluation and testing of the products identified in this report for product acceptance purposes to verify product quality.
- Products included in this report must be resubmitted to NTPEP every three (3) years for a quality assurance evaluation and every six (6) years for a full qualification evaluation in accordance with the work plan. Hence, all product test results included in this Report supersede data provided in previous Editions of this report.
- The User is guided to read the document entitled "Use and Application of NTPEP Geosynthetic Reinforcement Test Results" (see NTPEP website) for instructions and background on how to apply the results of the data contained in this report.

John Schuler **(Virginia DOT)**
Chairman, Geosynthetics
Technical Committee

Rodrigo Herrera **(Florida DOT)**
Vice Chairman, Geosynthetics
Technical Committee

Table of Contents

Executive Summary 3
1.0 Product Line Description and Testing Strategy 6
1.1 Product Description 6
1.2 Product Line Testing Approach 6
2.0 Product Polymer, Geometry, and Manufacturing Information 10
2.1 Product/Polymer Descriptors 10
2.2 Geometric Properties of Straps 10
2.3 Product Production Data and Manufacturing Quality Control 10
3.0 Wide Width Tensile Strength Data 11
4.0 Installation Damage Data (RF_{ID}) 13
4.1 Installation Damage Test Program 13
4.2 Installation Damage Full Scale Field Exposure Procedures and Materials Used 14
4.3 Summary of Installation Damage Full Scale Field Exposure Test Results 17
4.4 Estimating RF_{ID} for Specific Soils or Products 18
4.5 Laboratory Installation Damage Test Results per ISO/EN 10722 22
5.0 Creep Rupture Data (RF_{CR}) 24
5.1 Creep Rupture Test Program 24
5.2 Baseline Tensile Strength Test Results 25
5.3 Creep Rupture Test Results 25
5.3.1 Statistical Validation to Allow the Use of SIM Data to Establish Rupture Envelope 26
5.3.2 Statistical Validation to Allow the Use of Composite Rupture Envelope for Product Line 27
5.4 Creep Rupture Envelope Development and Determination of RF_{CR} 27
6.0 Long-Term Durability Data (RF_D) 29
6.1 Durability Test Program 29
6.2 Durability Test Results 30
7.0 Low Strain Creep Stiffness Data 32
7.1 Low Strain Creep Stiffness Test Program 32
7.2 Ultimate Tensile Test Results for Creep Stiffness Test Program 32
7.3 Creep Stiffness Test Results 32
Appendix A: NTPEP Oversight Committee A-1
Appendix B: Product Geometric and Production Details B-1
B.1 Product Geometric Information B-2
B.2 Product Production Information B-26
B.3 Product Manufacturing Quality Control Program B-27
Appendix C: Tensile Strength Detailed Test Results C-1
Appendix D: Installation Damage Detailed Test Results D-1
Appendix E: ISO/EN Laboratory Installation Damage Detailed Test Results E-1
E.1 ISO/EN Laboratory Installation Damage Test Program E-2
Appendix F: Creep Rupture Detailed Test Results F-1
Appendix G: Durability Detailed Test Results G-1
Appendix H: Creep Stiffness Detailed Test Results H-1

Tables

Table 1-1. Product designations included in product line. 6
Table 3-1. Wide width tensile strength, T_{ult}, for the Linear Composites ParaWeb products. 11
Table 3-2. Wide width tensile strength, T_{ult}, for the Linear Composites ParaLink products. 12
Table 4-1. Independent installation damage testing required for NTPEP qualification. 13
Table 4-2. Summary of installation damage tensile test results. 17
Table 4-3. Measured RF_{ID}. 18
Table 4-4. Summary of laboratory (ISO procedure) installation damage test results. 22
Table 5-1. Independent creep rupture testing required for NTPEP qualification. 24
Table 5-2. Ultimate tensile strength (UTS) and associated strain. 25
Table 5-3. Creep rupture test results for all tests conducted. 26
Table 5-4. RF_{CR} value for ParaWeb/ParaLink series for 3, 75 and 100 yr periods of loading/use. 27
Table 6-1. Independent durability testing required for NTPEP qualification. 30
Table 6-2. NTPEP durability test results for the ParaWeb/ParaLink product line and criteria to allow use of a default value for RF_D. 31
Table 7-1. Ultimate tensile strength (UTS) & associated strain. 32
Table 7-2. Summary of creep stiffness test results. 33

Note: Appendix tables not included.

Figures

Figure 1-1. Photo of ParaWeb 30 machine direction is perpendicular to ruler shown). 7
Figure 1-2. Photo of ParaWeb 50 (machine direction is perpendicular to ruler shown). 8
Figure 1-3. Photo of ParaWeb 135 (machine direction is perpendicular to ruler shown). 8
Figure 1-4. Photo of ParaLink 300 (machine direction is perpendicular to ruler shown). 9
Figure 1-5. Photo of ParaLink 1000 (machine direction is perpendicular to ruler shown). 9
Figure 4-1. Test soil grain size distribution. 15
Figure 4-2. Installation damage Type 1 test aggregate. 15
Figure 4-3. Installation damage Type 2 test aggregate. 16
Figure 4-4. Installation damage Type 3 test aggregate. 16
Figure 4-5. ParaWeb/ParaLink product line installation damage as a function of soil d_{50} size. 19
Figure 4-6. ParaWeb/ParaLink product line installation damage as a function of product unit weight for type 1 soil (coarse gravel - GP). 20
Figure 4-7. ParaWeb/ParaLink product line installation damage as a function of product unit weight for type 2 soil (sandy gravel - GP). 20
Figure 4-8. ParaWeb/ParaLink product line installation damage as a function of product unit weight for type 3 soil (silty sand – SM). 21
Figure 4-9. ParaWeb/ParaLink product line installation damage as a function of product unit weight for ISO/EN 10722. 23
Figure 5-1. Composite creep rupture data/envelope for the ParaWeb/ParaLink product line. 28
Figure 7-1. ParaWeb/ParaLink creep stiffness for 2 % strain @ 1000 hours. 33

Executive Summary

This test report provides data that can be used to characterize the short-term and long-term tensile strength the Linear Composites Limited polyester, Linear Low Density Polyethylene (LLDPE) coated geogrid reinforcement product lines using testing conducted on representative products within the product line. The purpose of this report is to provide data for product qualification purposes.

The test results contained herein were obtained in accordance with AASHTO R69-15 and the NTPEP work plan (see www.NTPEP.org) and can be used to determine the long-term strength of the geosynthetic reinforcement, including the long-term strength reduction factors RF_{ID}, RF_{CR}, and RF_D, and also used to determine low strain creep stiffness values.

All testing reported herein was performed on the materials tested in the direction of manufacture, i.e., the machine direction.

Product Line Description: The product line evaluated includes the following specific polyester, Linear Low Density Polyethylene (LLDPE) coated polymeric strips and geogrid reinforcement products:

Linear Composites ParaWeb 2S/2D/2E 30, ParaWeb 2S/2D/2E 40, ParaWeb 2S/2D/2E 50, ParaWeb 2S/2D/2E 75, ParaWeb 2S/2D/2E 100, ParaWeb 2S/2D/2E 135, ParaWeb MS/MD/ME 45, ParaWeb MS/MD/ME 54, ParaWeb MS/MD/ME 63, ParaLink 300, ParaLink 400, ParaLink 500, ParaLink 600, ParaLink 700, ParaLink 800, ParaLink 1000, ParaLink 1200 & ParaLink 1500.

This product line was evaluated through detailed testing of five representative products in the ParaWeb/ParaLink product line, and very limited testing of the other remaining products in the product line. ParaWeb 2E 50 was used as the primary product for product line characterization purposes (i.e., the baseline to which the other products were compared), and ParaWeb 2E 30, ParaWeb 2E 135, ParaLink 300 and ParaLink 1000 were used as secondary products to evaluate the properties of the range of products in the ParaWeb/ParaLink product line.

ParaWeb 2S/2D/2E & ParaWeb MS/MD/ME products are six styles of polymer straps which differ only in dimensional tolerances specific to strap width and coating thickness. The “2” and “M” designations refer to the width of the strap. ParaWeb “2” products are approximately 3.5 inches wide while ParaWeb “M” products are approximately two inches wide. The “S”, “D” and “E” designations refer to the thickness of the LLDPE coating with “S” having the thickest coating and “E” having the thinnest coating. Still, the production process itself remains the same for all types and it is this aspect of same production parameters that enables all styles to be considered one type of product.

Samples of the primary and secondary products were taken by an independent sampler on behalf of NTPEP on January 6, 2017, at the Linear Composites manufacturing plant located in West Yorkshire, UK. The remaining intermediate samples were sent by the manufacturer January 29, 2018.

Statistical Validation of Use of SIM and Validation of Product Line: The creep rupture test results obtained were statistically evaluated in accordance with R69-15 to assess the validity of using SIM to extend the creep rupture data and to assess the validity of treating the products submitted as a single product line. The following was verified:

i. Validation of the use of SIM to extend the creep rupture data was conducted previously as reported in the 2010 NTPEP report for this product line (NTPEP Report 8508.1). The results of that validation from this previous testing are summarized in Figure F-29 in Appendix F. Revalidation of the use of SIM for this product line was considered unnecessary in accordance with the NTPEP work plan and R69-15, since it was determined that the product line has not significantly changed in its formulation and processing relative to the product line as previously tested and reported in the 2010 NTPEP report.

ii. Based on the available creep data for all the products tested, the product line submitted by the manufacturer statistically qualifies to be a product line and can therefore be represented using test results from representative products in the product line (see Figures F-30 through F-33 in Appendix F for details). Recommendations on application of the representative product data to the rest of the product line for installation damage, durability and creep stiffness are provided in their respective report sections and summarized below in this executive summary.

Test Results for T_{ult}: All wide width test results (ASTM D6637) obtained for this product line through the NTPEP testing were greater than the minimum average roll values (MARV's) provided by the manufacturer (see Table 3-1).

Test Results for RF_{ID}: Installation damage testing on this product line resulted in values of RF_{ID} that ranged as follows:

$$RF_{ID} = 1.00 \text{ to } 1.46$$

In general, as the test material gradation becomes more coarse, the value of RF_{ID} increased. Therefore, interpolation of this data to intermediate gradations appears to be feasible especially between the larger gradations since the finer gradations resulted in minimal damage. See Table 4-3 and Figures 4-5 through 4-8 for details. Laboratory installation damage test data in accordance with ISO/EN 10722 are also provided for future use in comparison to quality assurance testing (see Table 4-6).

It should be noted that the installation damage testing conducted represents an increase in compaction and spreading equipment size (i.e., a 15,000 lb wheeled front end loader – Caterpillar 416F, and a 23,000-26,000 lb single drum vibratory roller) and a reduced aggregate lift thickness over the sample of 6 inches relative to the installation damage testing reported in some previous NTPEP test reports. Actual RF_{ID} values could be lower if installation conditions are less severe (e.g., greater initial lift thickness over the geosynthetic, use of lighter weight equipment, etc.). Actual RF_{ID} values could be higher if the spreading or compacting equipment tires or tracks are allowed to be in direct contact with the geosynthetic before or during fill

placement and compaction, if the thickness of the fill material between the equipment tires or tracks is inadequate (especially for high tire pressure equipment such as dump trucks), or if excessive rutting of the first lift of soil over the geosynthetic (e.g., due to soft subgrade soil) is allowed to occur.

Test Results for RF_{CR}: The creep rupture testing conducted indicates that the following value of RF_{CR} may be used:

$$RF_{CR} = 1.36$$

This value of RF_{CR} is applicable to a 75 year life at 68° F (20° C), and may be used to characterize the full product line as defined herein. See Figure 5-1 for detailed creep rupture envelope or to obtain values for other design lives.

Test Results for RF_D: The chemical durability index testing results meet the requirements in AASHTO R69-15 to allow use of a default reduction factor for RF_D. See Table 6-2 for specific test results, and see AASHTO R69-15 or the document entitled "Use and Application of NTPEP Geosynthetic Reinforcement Test Results" (www.NTPEP.org) for recommended default reduction factors for RF_D. The UV test results (ASTM D4355) for this product line, as represented by the lightest weight product from each manufacturing plant, indicate strength retained at 500 hours in the weatherometer of 93%. These values of UV strength retained should be considered to be a lower bound value for the product line.

Test Results for Creep Stiffness: The 1000 hr, 2% strain secant stiffness ($J_{2\%,1000hr}$) test results ranged from 39,993 lb/rib for the lowest strength style to 151,878 lb/rib for the highest strength style. There exists a strong linear relationship between creep stiffness and the short-term tensile strength (T_{lot}), therefore the 1000 hr, 2% strain secant stiffness can be reasonably expressed for any product in the product line as:

$$J_{2\%,1000\ hr} = 3.8033(T_{lot}) + 16{,}498$$

Where, T_{lot} is the roll/lot specific single rib tensile strength per ASTM D6637. See Table 7-2 and Figure 7-1 for details. Note that once the stiffness is determined from this equation, an equivalent MARV for this property can be determined by multiplying the stiffness by the ratio of T_{MARV}/T_{lot}.

1.0 Product Line Description and Testing Strategy

1.1 Product Description

The **Linear Composites** family of straps are high-strength, Linear Low Density Polyethylene (LLDPE) coated straps. The ParaLink products connect ParaWeb straps into a geogrid product. The product line evaluated consists of the products as manufactured by Linear Composites listed in Table 1-1.

Table 1-1. Product designations included in product line.

Linear Composites Reinforcement Product Designations (i.e., Styles)		
ParaWeb		ParaLink
ParaWeb 2S/2D/2E 30		ParaLink 300
ParaWeb 2S/2D/2E 40		ParaLink 400
ParaWeb 2S/2D/2E 50		ParaLink 500
ParaWeb 2S/2D/2E 75		ParaLink 600
ParaWeb 2S/2D/2E 100		ParaLink 700
ParaWeb 2S/2D/2E 135		ParaLink 800
ParaWeb MS/MD/ME 45		ParaLink 1000
ParaWeb MS/MD/ME 54		ParaLink 1200
ParaWeb MS/MD/ME 63		ParaLink 1500

ParaWeb 2S/2D/2E & ParaWeb MS/MD/ME products are six styles of polymer straps which differ only in dimensional tolerances specific to strap width and coating thickness. The “2” and “M” designations refer to the width of the strap. ParaWeb “2” products are approximately 3.5 inches wide while ParaWeb “M” products are approximately two inches wide. The “S”, “D” and “E” designations refer to the thickness of the LLDPE coating with “S” having the thickest coating and “E” having the thinnest coating. Still, the production process itself remains the same for all types and it is this aspect of same production parameters that enables all styles to be considered one type of product.

The scope of the evaluation is limited to the strength in the machine direction (MD). The cross-machine direction (XD) was not specifically evaluated.

1.2 Product Line Testing Approach

This product line was evaluated through detailed testing of five representative products in the ParaWeb/ParaLink product line, and very limited testing of the other remaining products in the

product line. ParaWeb 2E 50 was used as the primary product for product line characterization purposes (i.e., the baseline to which the other products were compared), and ParaWeb 2E 30, ParaWeb 2E 135, ParaLink 300 and ParaLink 1000 were used as secondary products to evaluate the properties of the range of products in the ParaWeb/ParaLink product line. For the ParaWeb products, the "E" designation products were selected for testing because they had the thinnest coating and would be most susceptible to installation damage and UV damage. Therefore use of the "E" products would provide the most conservative assessment for the product line.

Photographs of all the products tested are provided in Figures 1-1 through 1-6.

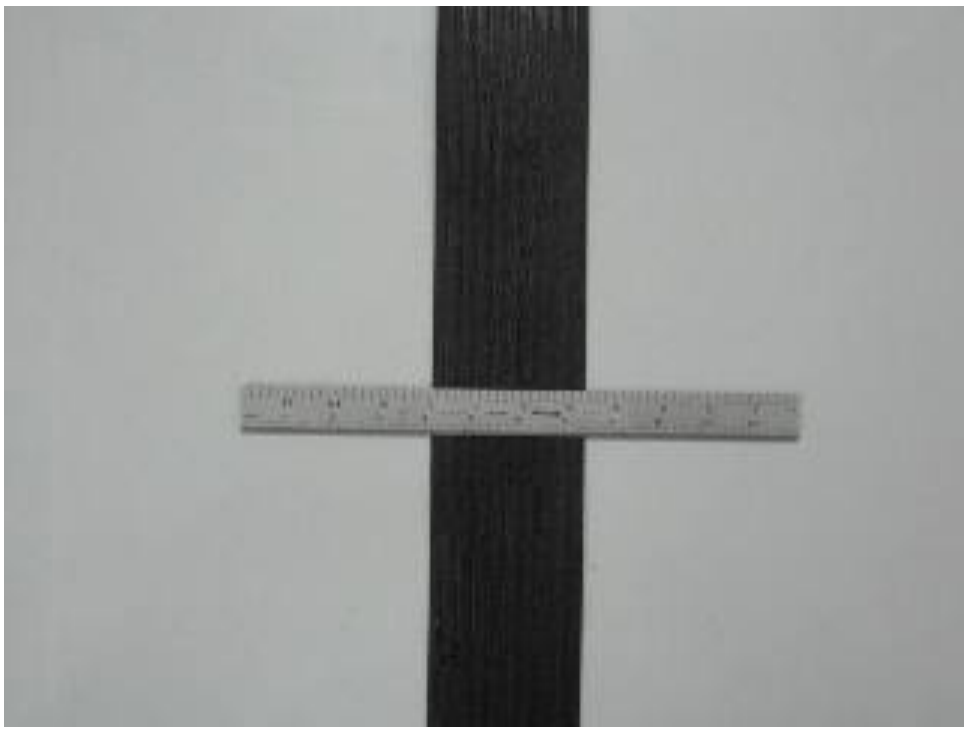

Figure 1-1. Photo of ParaWeb 30 machine direction is perpendicular to ruler shown).

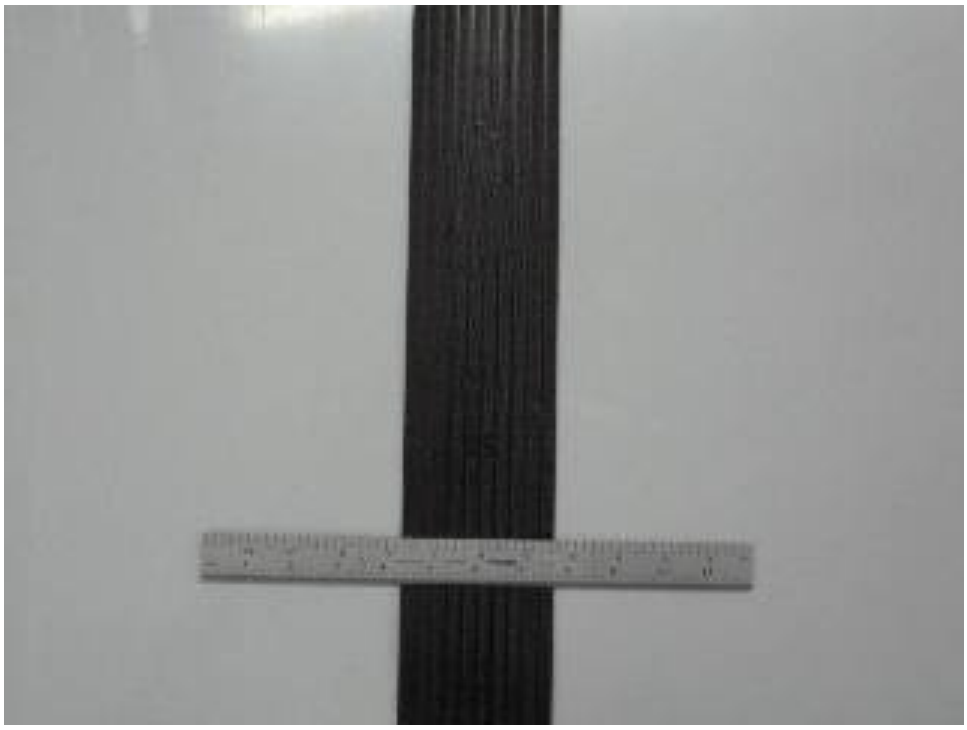

Figure 1-2. Photo of ParaWeb 50 (machine direction is perpendicular to ruler shown).

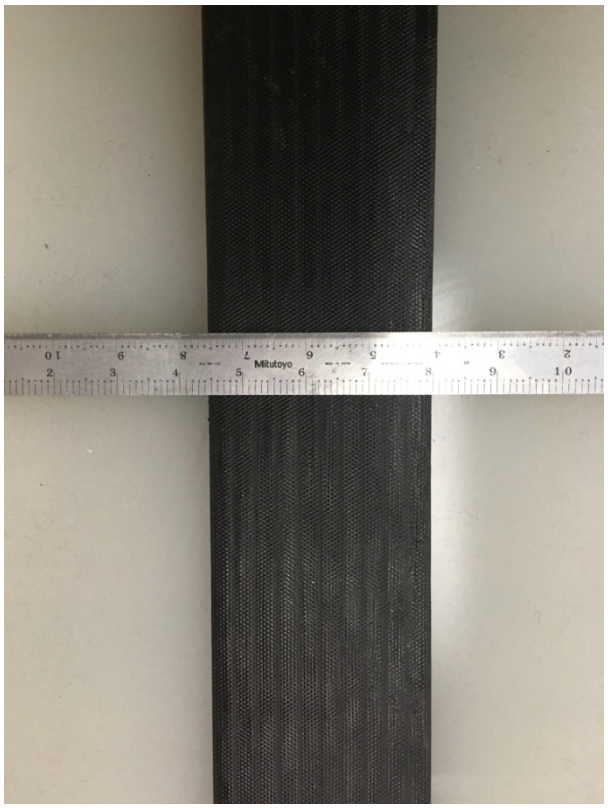

Figure 1-3. Photo of ParaWeb 135 (machine direction is perpendicular to ruler shown).

Figure 1-4. Photo of ParaLink 300 (machine direction is perpendicular to ruler shown).

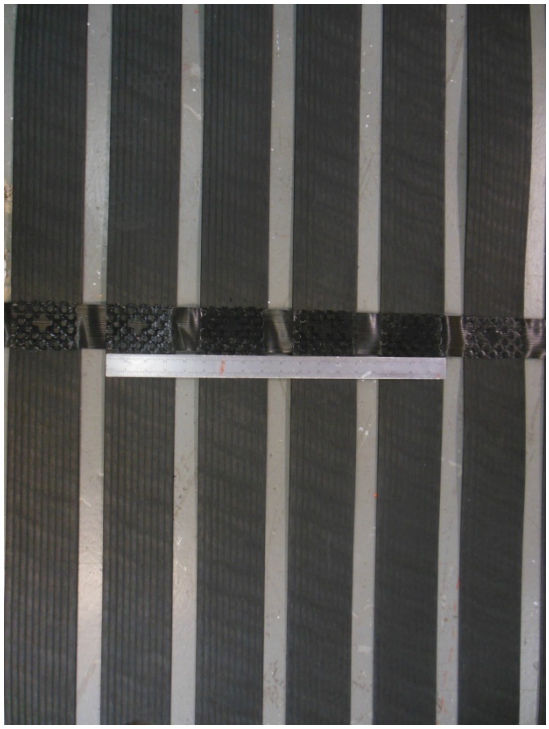

Figure 1-5. Photo of ParaLink 1000 (machine direction is perpendicular to ruler shown).

2.0 Product Polymer, Geometry, and Manufacturing Information

2.1 Product/Polymer Descriptors

Yarn used in the **ParaWeb and ParaLink** products are high molecular weight, low CEG, high tenacity polyester (PET). The source of the yarns is proprietary. Coating used in all **ParaWeb and ParaLink** products is a Linear Low Density Polyethylene (LLDPE)-based coating with no post-consumer recycled materials. The source of coating is confidential.

For the PET yarns, key descriptors include minimum production number average molecular weight (GRI-GG7 and ASTM D 4603) and maximum carboxyl end group content (GRI-GG8 and ASTM D 7409):

- Minimum Molecular Weight > 25,000 (Measured value is 34,456)
- Maximum CEG < 30 (Measured value is 15.9)
- % of regrind used in product: 0%.
- % of post-consumer recycled material by weight: 0%

2.2 Geometric Properties of Straps

Rib width, thickness, and product weight/unit length vary depending on strap style. While such data are generally not used for design, it can be useful for identification purposes, and to be able to detect any changes in the product. Measurements of geogrid rib spacing (ParaLink only) are also used to convert tensile test results (i.e., load at peak strength, T_{ult}), to a load per unit width value (i.e., lbs/ft or kN/m). Detailed measurement results, as well as the typical values supplied by the manufacturer for each product, are provided in Appendix B, Section B.1.

2.3 Product Production Data and Manufacturing Quality Control

Product roll sizes and weights, lot sizes, and a summary of the manufacturer's quality control program are provided in Appendix B, Sections B.2 and B.3. Such information can be useful in working with the manufacturer if product quality issues occur.

3.0 Wide Width Tensile Strength Data

Minimum average roll values supplied by the manufacturer and test results obtained on all the products in the product line for this NTPEP testing program are provided in Tables 3-1 and 3-2. Wide width tensile tests were conducted in accordance with ASTM D6637. The measured strap dimensions discussed in Section 2 and provided in Appendix B, Section B.1, were used to convert test loads to load per unit width values. Note that the independently measured T_{ult} values only indicate that the sampled products have a tensile strength that exceeds the Manufacturer's minimum average roll values (MARV's). As such, these independently measured T_{ult} values should not be used directly for design purposes. However, these independently measured T_{ult} test results have been used as roll specific tensile strengths used for developing installation damage and creep reduction factors. Detailed test results are provided in Appendix C.

Table 3-1. Wide width tensile strength, T_{ult}, for the Linear Composites ParaWeb products.

Product Style/Type	Test Method	MARV for T_{ult}, in MD (lbs)	T_{ult}, Independently Measured in MD (lbs)*
ParaWeb 2D/2E 30	ASTM D 6637	6,744	7,029
ParaWeb 2S 30	ASTM D 6637	7,550	
ParaWeb 2D/2E 40	ASTM D 6637	8,992	
ParaWeb 2S 40	ASTM D 6637	10,067	
ParaWeb MS/MD/ME 45	ASTM D 6637	10,116	
ParaWeb 2D/2E 50	ASTM D 6637	11,240	11,807
ParaWeb 2S 50	ASTM D 6637	12,584	
ParaWeb MS/MD/ME 54	ASTM D 6637	12,140	
ParaWeb MS/MD/ME 63	ASTM D 6637	14,163	
ParaWeb 2D/2E 75	ASTM D 6637	16,861	
ParaWeb 2S 75	ASTM D 6637	18,876	
ParaWeb 2D/2E 100	ASTM D 6637	22,481	
ParaWeb 2S 100	ASTM D 6637	25,168	
ParaWeb 2D/2E 135	ASTM D 6637	30,349	35,130
ParaWeb 2S 135	ASTM D 6637	NP	

(Conversion: 1 lbs = 0.00445 kN)

MD = machine direction, NP = Not Provided.

*Average of 5 readings obtained during NTPEP testing.

Note: The reported strengths are per strap.

Table 3-2. Wide width tensile strength, T_{ult}, for the Linear Composites ParaLink products.

Product Style/Type	Test Method	MARV for T_{ult}, in MD (lb/ft)	T_{ult}, Independently Measured in MD (lb/ft)*
ParaLink 300	ASTM D 6637	20,548	21,166
ParaLink 400	ASTM D 6637	27,397	
ParaLink 500	ASTM D 6637	34,247	
ParaLink 600	ASTM D 6637	41,096	
ParaLink 700	ASTM D 6637	47,945	
ParaLink 800	ASTM D 6637	54,795	
ParaLink 1000	ASTM D 6637	68,493	73,224
ParaLink 1200	ASTM D 6637	82,192	
ParaLink 1500	ASTM D 6637	102,780	

(Conversion: 1 lb/ft = 0.0146 kN/m)

MD = machine direction

*Average of 5 readings obtained during NTPEP testing.

4.0 Installation Damage Data (RF_{ID})

4.1 Installation Damage Test Program

Installation damage testing and interpretation was conducted in accordance with AASHTO R69-15, except as noted herein. Samples were exposed to three "standard" soils: a coarse gravel, a sandy gravel, and a sand. Additional laboratory installation damage testing in accordance with ISO/EN 10722 was also conducted. The specific installation damage test program is summarized in Table 4-1.

Table 4-1. Independent installation damage testing required for NTPEP qualification.

Manufacturer: Linear Composites Limited **PRODUCT Line:** ParaWeb 30 to ParaWeb 135 ParaLink 300 to ParaLink 1500			
Tests Conducted	**Qualification (every 6 yrs) / Verification (every 3 yrs)**		
	Products Tested		**# of Tests (see Note 1)**
	Qualification	**Verification**	
Index tensile tests on undamaged material (ASTM D 6637)	ParaWeb 30, ParaWeb 50, ParaWeb 135, ParaLink 300 and ParaLink 1000	NA	5
Three field exposures, including soil characterization and compaction measurements (ASTM D5818)	ParaWeb 30, ParaWeb 50, ParaWeb 135, ParaLink 300 and ParaLink 1000 in Types 1, 2 and 3 soils	NA	15
Tensile tests on damaged specimens (ASTM D 6637)	ParaWeb 30, ParaWeb 50, ParaWeb 135, ParaLink 300 and ParaLink 1000 in Types 1, 2 and 3 soils	NA	15
Laboratory installation damage testing –as basis for future verification and to help interpolate test results to products not tested (ISO/EN 10722)	ParaWeb 30, 40, 45, 50, 54, 63, 75, 100 & 135 and ParaLink 300, 400, 500, 600, 700, 800, 1000, 1200 & 1500	NA	18
Note 1 Each test is performed using the number of specimens required by the test standard. For example, for index tensile testing, a test is defined 5 to 6 specimens. See the specific test procedures for details on this.			

4.2 Installation Damage Full Scale Field Exposure Procedures and Materials Used

Three "standard" soils were used for the field exposure of the strap samples to installation damage. Soil gradation curves for each soil are provided in Figure 4-1. Photographs of each soil illustrating particle angularity are provided in Figures 4-2 through 4-4. LA Abrasion tests conducted to characterize the backfill materials indicted a maximum loss of 20%, which is well within the requirements stated in R69-15.

The approach specifically used for applying installation damage to the geosynthetic samples that allows for exhumation of the test samples while avoiding unintended damage was initially developed by Watts and Brady[1] of the Transport Research Laboratory (TRL) in the United Kingdom. The procedure generally conforms to R69-15 and ASTM D 5818 requirements.

Since compaction typically occurs parallel to the face of retaining walls and the contour lines of slopes, the machine direction was placed perpendicular to the running direction of the compaction equipment. To initiate the exposure procedure, four steel plates each measuring 42-inches x 52-inches (1.07 m x 1.32 m), equipped with lifting chains, were placed on a flat clean surface of hardened limestone rock. The longer side of the plates is parallel to the running direction of the compaction equipment. A layer of soil/aggregate was then placed over the adjacent plates to an approximate compacted thickness of 6 inches (0.15 m). Next, each of four coupons of the tested geosynthetic sample was placed on the compacted soil over an area corresponding to an underlying steel plate. To complete the installation, the second layer of soil was placed over the coupons using spreading equipment and compacted to a thickness of 6 inches (0.15 m) using a vibratory compactor. The spreading equipment used included a wheeled front end loader and a 23,000 -26,000 lb single drum vibratory roller with pneumatic rear wheels. The front end loader was allowed to spread the aggregate by driving over the geosynthetic with a 6 inch aggregate lift between the wheels and the geosynthetic.

The following construction quality control measures were followed during exposure:

- Proctor and sieve analyses were performed on each soil/aggregate, when possible. (Proctors could not be performed on Gradations 1 and 2.)
- Lift thickness measurements were made after soil/aggregate compaction.
- When possible, moisture and density measurements were made on each lift using a nuclear density gage to confirm that densities >90% of modified Proctor (per ASTM D 1557) were being achieved.

To exhume the geosynthetic, railroad ties were removed and one end of each plate was raised with lifting chains. After raising the plate to about 45°, soil located near the bottom of the leaning plate was removed and, if necessary, the plate was struck with a sledgehammer to loosen the fill. The covering soil/aggregate was then carefully removed from the surface while "rolling" the geosynthetic away from the underlying soil/aggregate. This procedure assured a minimum of exhumation stress. Photographs of the installation damage field exposures are provided in Appendix D. A detailed tabulation of each soil gradation is provided in Appendix D, Table D-10.

[1] G.R.A. Watts and K.C. Brady (1990), *Site Damage trials on geogrids*, Geogrids, Geomembranes and Related Produts, Balkema Rotterdam.

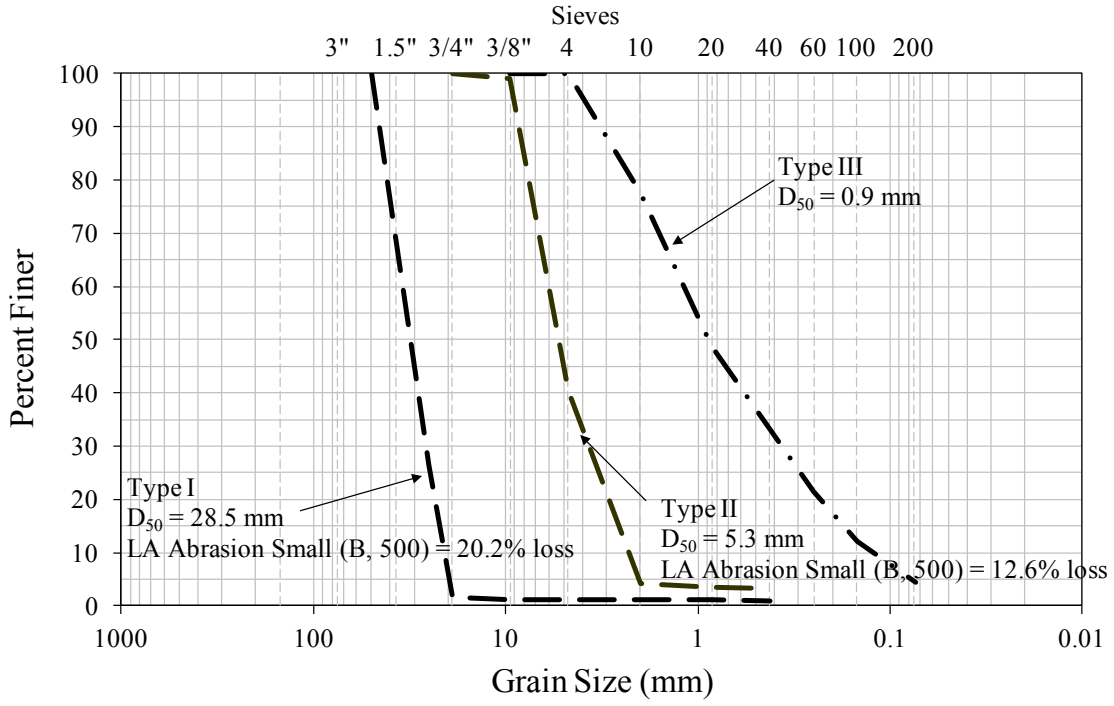

Figure 4-1. Test soil grain size distribution.

Figure 4-2. Installation damage Type 1 test aggregate.

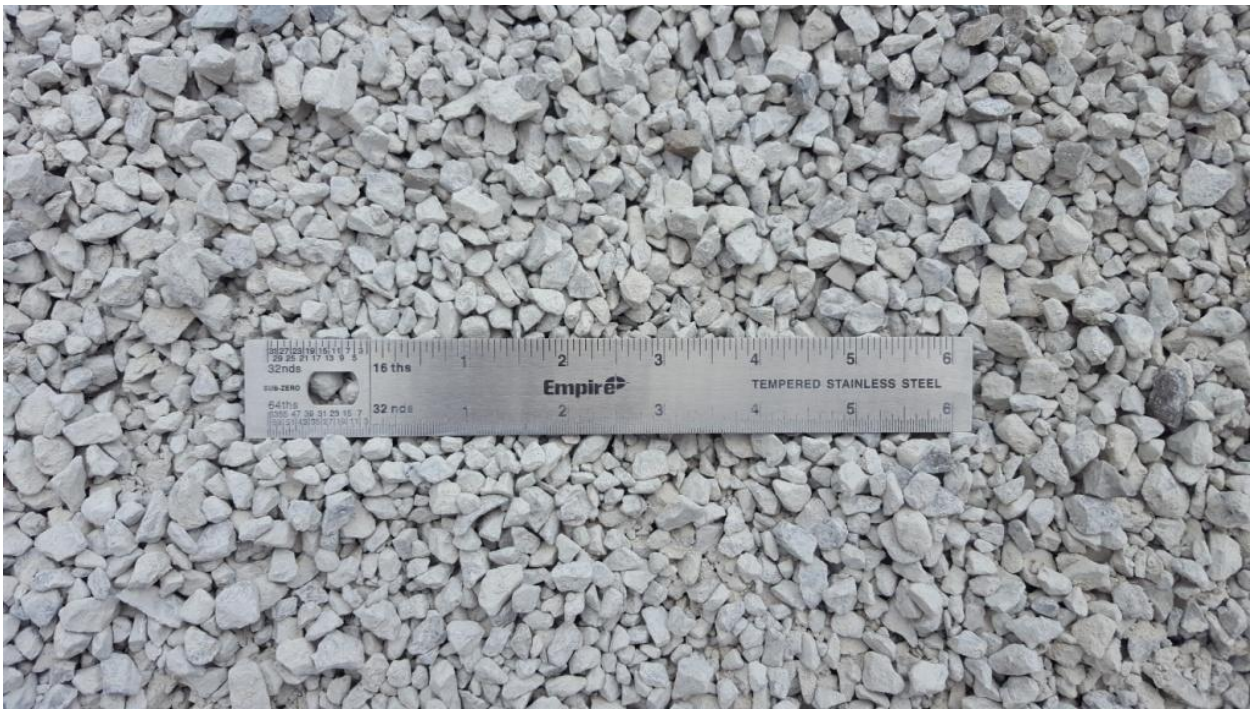

Figure 4-3. Installation damage Type 2 test aggregate.

Figure 4-4. Installation damage Type 3 test aggregate.

4.3 Summary of Installation Damage Full Scale Field Exposure Test Results

The roll specific ultimate tensile strength (ASTM D6637) test results for the baseline, T_{lot} (i.e., undamaged tensile strength tested prior to sample installation in the ground) and the ultimate tensile strength of the installation damaged strap samples, T_{dam}, are provided in Table 4-2. RF_{ID}, calculated using the results shown in Table 4-2, are summarized in Table 4-3. Strength retained is calculated as the ratio of the average exhumed strength T_{dam} divided by the average baseline strength T_{lot} for the product sample. RF_{ID} is the inverse of the retained strength (i.e. 1 / 0.779 = 1.28). Detailed test results for each specimen tested are provided in Appendix D, Tables D-1 through D-15.

Table 4-2. Summary of installation damage tensile test results.

Backfill Type	Product Style	Baseline		Exhumed	
		[1]T_{lot} (lb/rib)	COV (%)	[2]T_{dam} (lb/rib)	COV (%)
Type 1 Coarse Gravel (GP)	ParaWeb 30	7,029	0.3	4,825	12.0
	ParaWeb 50	11,807	0.5	9,848	6.2
	ParaWeb 135	35,130	0.1	34,979	0.4
	ParaLink 300	12,316	1.3	11,662	5.7
	ParaLink 1000	29,168	0.5	29,178	0.8
Type 2 Sandy Gravel (GP)	ParaWeb 30	7,029	0.3	6,902	2.3
	ParaWeb 50	11,807	0.5	11,644	0.6
	ParaWeb 135	35,130	0.1	35,031	0.5
	ParaLink 300	12,316	1.3	12,432	0.8
	ParaLink 1000	29,168	0.5	29,168	0.6
Type 3 Silty Sand (SM)	ParaWeb 30	7,029	0.3	7,015	0.4
	ParaWeb 50	11,807	0.5	11,831	0.5
	ParaWeb 135	35,130	0.1	34,987	0.4
	ParaLink 300	12,316	1.3	12,398	1.4
	ParaLink 1000	29,168	0.5	29,043	0.6

[1]Average of 5 specimens.
[2]Average of 10 specimens.
(Conversion: 1 lbs = 0.00445 kN)

Table 4-3. Measured RF_{ID}.

Product Style	Type 1 Coarse Gravel		Type 2 Sandy Gravel		Type 3 Silty Sand	
	% Retained	RF_{ID}	% Retained	RF_{ID}	% Retained	RF_{ID}
ParaWeb 30	68.6	1.46	98.2	1.02	99.8	1.00
ParaWeb 50	83.4	1.20	98.6	1.01	100.2	1.00
ParaWeb 135	99.6	1.00	99.7	1.00	99.6	1.00
ParaLink 300	94.7	1.06	100.9	1.00	100.7	1.00
ParaLink 1000	100.0	1.00	100.0	1.00	99.6	1.00

4.4 Estimating RF_{ID} for Specific Soils or Products

In general, as the test material gradation becomes more coarse, the value of strength retained decreased (i.e., RF_{ID} increased). Trend lines plotted in Figure 4-5 for the upper bound and lower bound for all the installation damage data obtained for the product line illustrate the general trend of the installation damage data with regard to soil d_{50} size. Interpolation of this data to intermediate gradations appears to be feasible based on these test results, especially between the larger gradations since the finer gradations resulted in minimal damage, though the scatter in that trend should be recognized when estimating values of RF_{ID} for specific soils. All products in the product line were installation damage tested for the full range of soil gradations (Gradations 1 through 3).

Only representative products in the product line were installation damage tested for the full range of soil gradations (Gradations 1 through 3). However, bench scale installation damage tests (ISO/EN 10722) were conducted for the remaining products in the line to verify whether or not interpolation of the installation damage test results was feasible for the remaining products in the line not fully evaluated for installation damage resistance. The ParaWeb/ParaLink product line generally exhibited moderately strong relationships between the weight or the tensile strength of the product and the strength retained after installation damage for gradation 1 but showed no consistent relationship with product weight or tensile strength for gradations 2 and 3. See figures 4-6 through 4-8 for illustrations of those relationships. Therefore, interpolation of these test results to products in the line not tested based on product weight or strength may be only feasible for gradation 1, though caution should be exercised and appropriate judgment applied to insure a safe estimate of RF_{ID} each product. For products in the product line not tested in the full scale installation damage tests, for gradations 2 and 3, use of a lower bound value of strength retained for the products not tested in the full scale installation damage tests (i.e., (P_{dmin} in figure 4-7) appears to be appropriate for design.

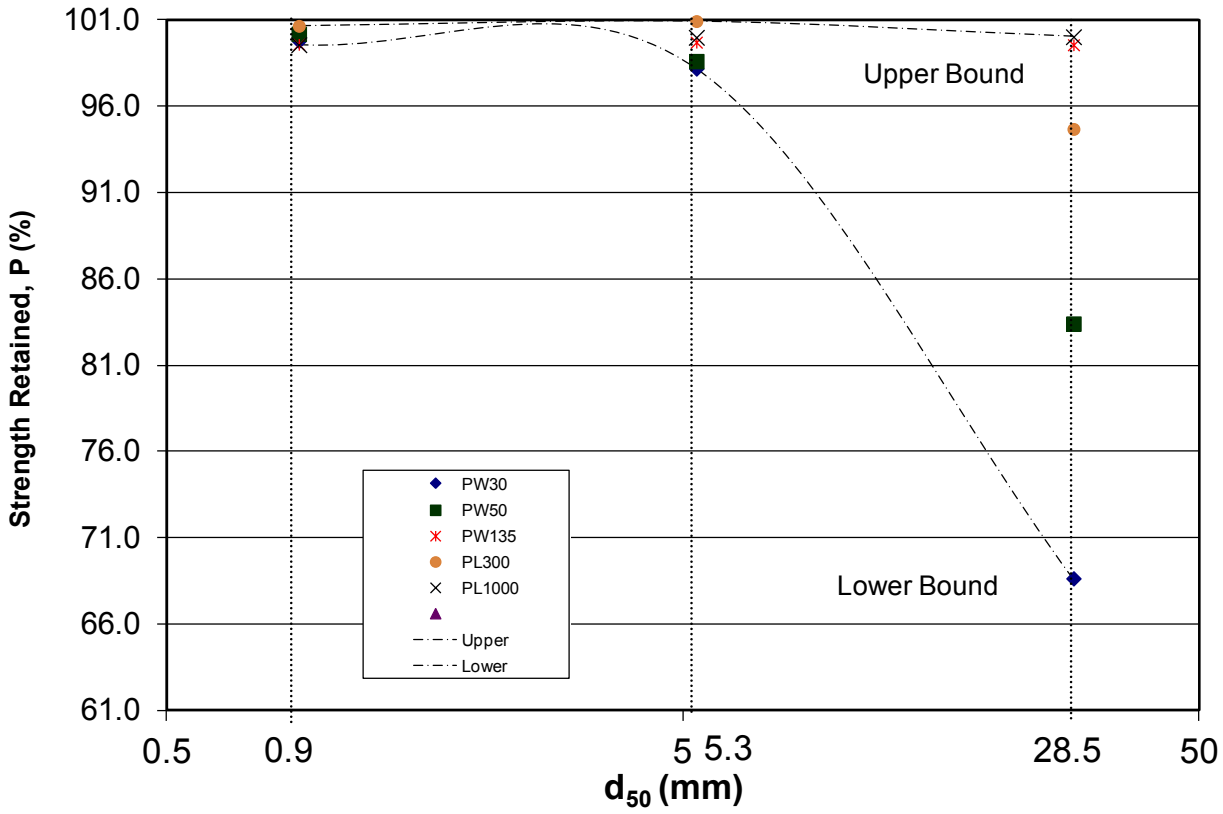

Note: $RF_{ID} = 1/P$; d_{50} = sieve size at which 50% of soil passes by weight

Figure 4-5. ParaWeb/ParaLink product line installation damage as a function of soil d_{50} size.

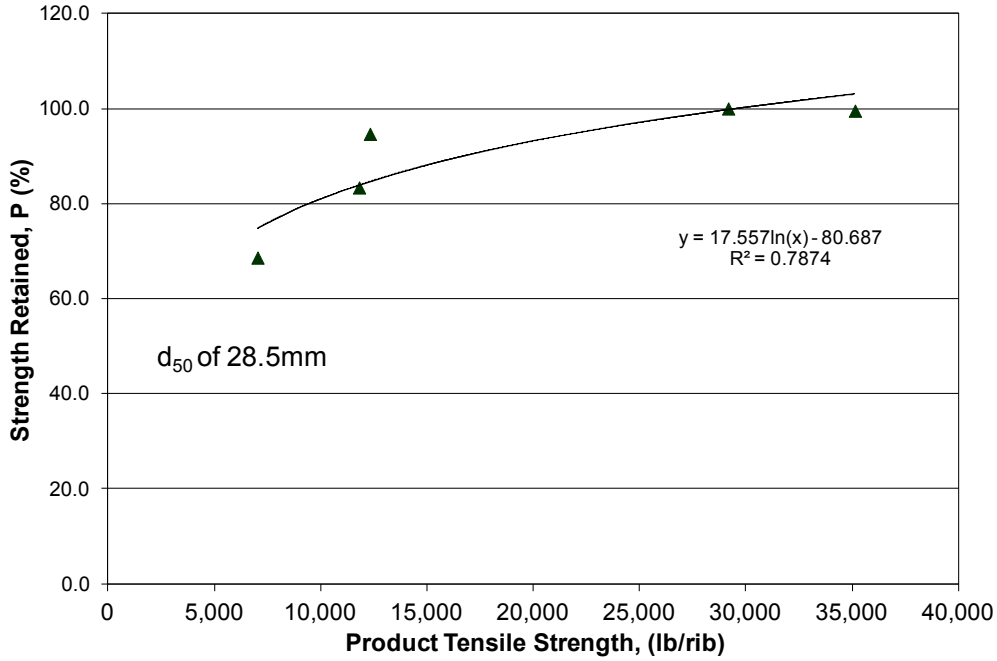

Figure 4-6. ParaWeb/ParaLink product line installation damage as a function of product unit weight for type 1 soil (coarse gravel - GP).

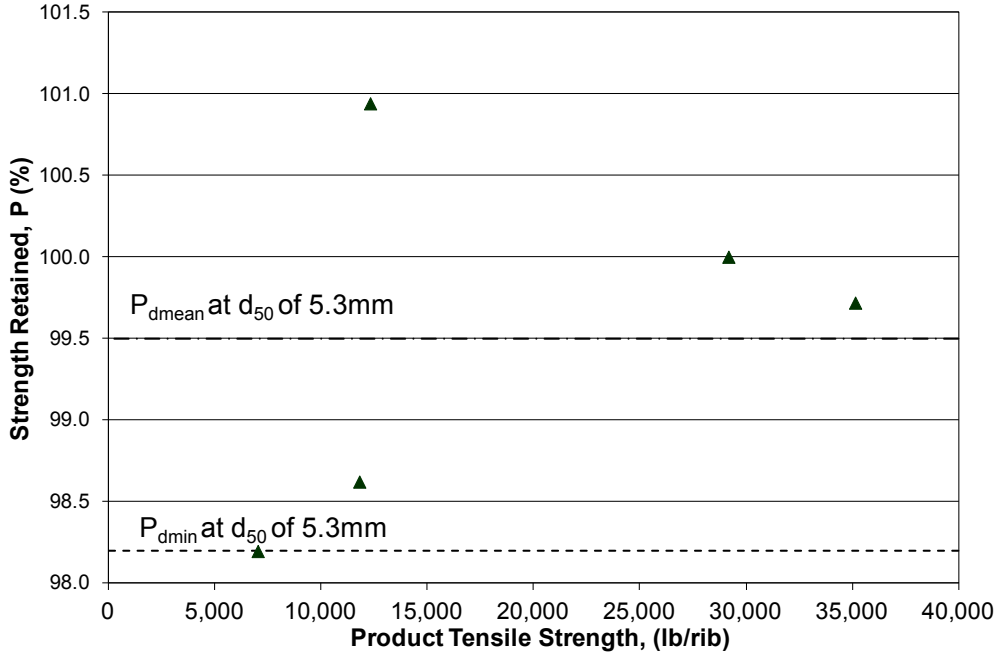

Figure 4-7. ParaWeb/ParaLink product line installation damage as a function of product unit weight for type 2 soil (sandy gravel - GP).

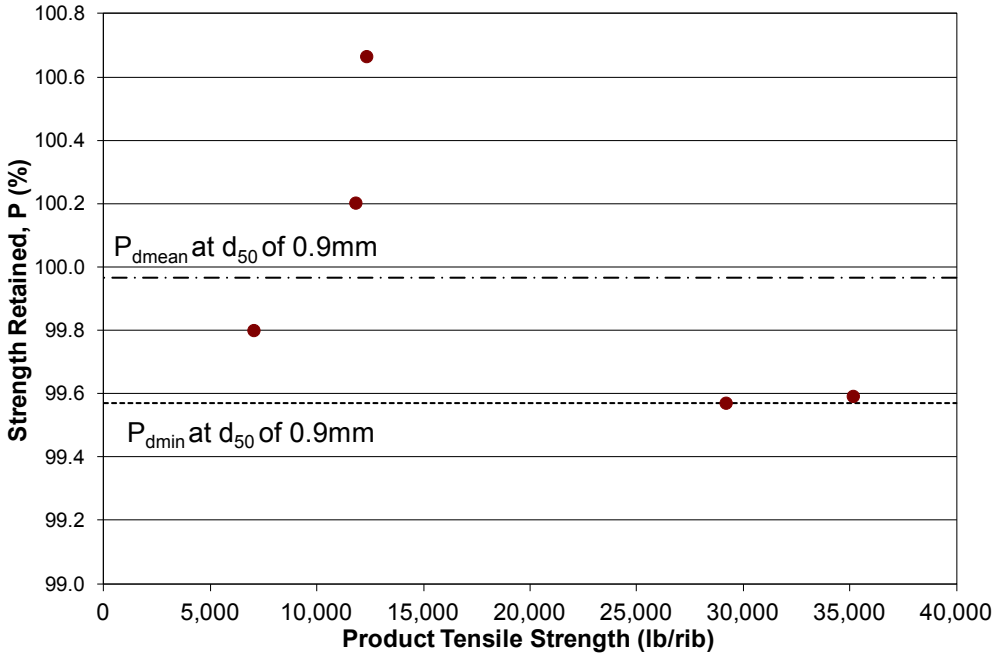

Figure 4-8. ParaWeb/ParaLink product line installation damage as a function of product unit weight for type 3 soil (silty sand – SM).

It should be noted that the installation damage testing conducted represents an increase in compaction and spreading equipment size (i.e., a 15,000 lb wheeled front end loader – Caterpillar 416F, and a 23,000-26,000 lb single drum vibratory roller – a 10,000 lb roller was used in past testing) and a reduced aggregate lift thickness over the geosynthetic of 6 inches (an 8 inch lift thickness was used in past testing) relative to the installation damage testing reported in some previous NTPEP test reports. Actual RF_{ID} values could be lower if installation conditions are less severe (e.g., greater initial lift thickness over the geosynthetic, use of lighter weight equipment, etc.). Actual RF_{ID} values could be higher if the spreading or compacting equipment tires or tracks are allowed to be in direct contact with the geosynthetic before or during fill placement and compaction, if the thickness of the fill material between the equipment tires or tracks is inadequate (especially for high tire pressure equipment such as dump trucks), or if excessive rutting of the first lift of soil over the geosynthetic (e.g., due to soft subgrade soil) is allowed to occur.

4.5 Laboratory Installation Damage Test Results per ISO/EN 10722

Laboratory installation damage testing and interpretation was conducted in accordance with ISO/EN 10722. In this procedure, geosynthetic specimens are exposed to simulated installation stresses and abrasion using a standard "backfill" material in a bench scale device. Once exposed, they are tested for tensile strength to determine the retained strength after damage. Five baseline and five exposed specimens from each product were tested. The test results are summarized in Table 4-4. Detailed test results are provided in Appendix E, as well as a photograph of the test set-up and a close up of the standard backfill material used.

This procedure is intended to be a reproducible index test to assess relative susceptibility of the geosynthetic to damage. In this NTPEP testing program, the results from this test are primarily intended to be used for future quality assurance to assess the consistency in the product's susceptibility to installation damage. It is not intended to be used directly in the determination of RF_{ID} for a given soil backfill gradation.

Table 4-4. Summary of laboratory (ISO procedure) installation damage test results.

Product Style	Mean Baseline Tensile Strength (lb/rib)	Coefficient of Variation (%)	Mean Exposed Tensile Strength (lb/rib)	Coefficient of Variation (%)	Strength Retained (%)
ParaWeb 30	7,121	1	5,802	3	81
ParaWeb 40	10,129	1	9,380	2	93
ParaWeb 45	10,130	0.2	9,855	2	97
ParaWeb 50	11,895	1	10,971	2	92
ParaWeb 54	12,599	0.3	12,458	1	99
ParaWeb 63	14,529	0.5	14,407	1	99
ParaWeb 75	19,377	0.2	19,008	1	98
ParaWeb 100	24,647	1	24,653	0.4	100
ParaWeb 135	35,334	0.5	35,325	0.3	100
ParaLink 300	12,601	1	12,239	2	97
ParaLink 400	17,031	0.3	16,387	1	96
ParaLink 500	22,020	1	21,919	0.4	100
ParaLink 600	26,180	1	26,258	1	100
ParaLink 700	31,577	1	31,552	1	100
ParaLink 800	29,768	0.2	29,781	0.4	100
ParaLink 1000	29,044	1	28,374	2	98
ParaLink 1200	29,729	0.2	29,749	0.3	100
ParaLink 1500	35,762	1	35,674	0.4	100

(Conversion: 1 lbs = 0.00445 kN)

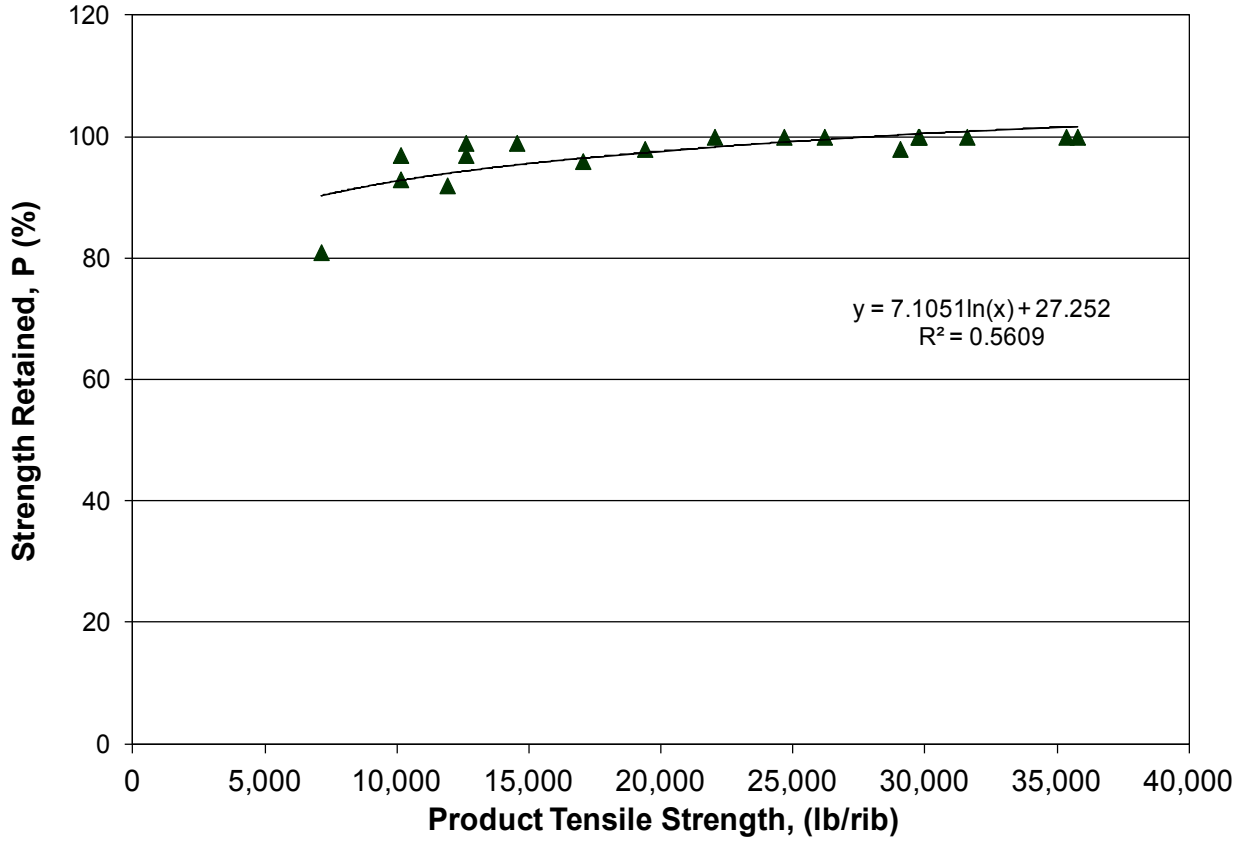

Figure 4-9. ParaWeb/ParaLink product line installation damage as a function of product unit weight for ISO/EN 10722.

5.0 Creep Rupture Data (RF_{CR})

5.1 Creep Rupture Test Program

Creep testing and interpretation has been conducted in accordance with AASHTO R69-15. A baseline (i.e., reference) temperature of 68° F (20° C) was used. ParaWeb 50 was used as the primary product to establish the creep rupture envelope, with limited creep testing of ParaWeb 30, ParaWeb 135, ParaLink 300 and ParaLink 1000 to verify the ability to interpolate creep rupture behavior to the products not specifically tested (i.e., to treat all the products submitted for evaluation as a product line per R69-15 and the NTPEP work plan).

The creep rupture testing program is summarized in Figure 5-1. Since validation of the use of SIM to extend the creep rupture data was conducted previously as reported in the 2010 NTPEP report for this product line (NTPEP Report 8508.1), creep testing was conducted using only ASTM D6992 (i.e., the Stepped Isothermal Method - SIM).

Table 5-1. Independent creep rupture testing required for NTPEP qualification.

Manufacturer: Linear Composites Limited **PRODUCT Line:** ParaWeb 30 to ParaWeb 135 ParaLink 300 to ParaLink 1500			
Tests Conducted	**Qualification (every 6 yrs) / Verification (every 3 yrs)**		
	Products Tested		**# of Tests (see Note 1)**
	Qualification	**Verification**	
Index single rib tensile tests on lot specific material (ASTM D 6637)	None	NA	0
Index wide width tensile tests on lot specific material (ASTM D 6637)	ParaWeb 30, ParaWeb 50, ParaWeb 135, ParaLink 300 and ParaLink 1000	NA	5
PRIMARY PRODUCT 6 Rupture Points – Conventional Creep testing up to 1000 hrs (ASTM D5262)	NA	NA	0
PRIMARY PRODUCT 6 Rupture Points – Accelerated Creep rupture testing (SIM). (ASTM D6992)	ParaWeb 50 @ 12 load levels	NA	12
SECONDARY PRODUCT(S) Conventional Creep Testing (ASTM D5262)	None	NA	0
SECONDARY PRODUCT(S) Accelerated Creep rupture testing (SIM). (ASTM D6992)	ParaWeb 30, ParaWeb 135, ParaLink 300 and ParaLink 1000@ 4 load levels	NA	16
Note 1: Each test is performed using the number of specimens required by the test standard. For example, for index tensile testing, a test is defined 5 to 6 specimens. See the specific test procedures for details on this.			

5.2 Baseline Tensile Strength Test Results

The width, spacing and strength of the individual sample ribs prohibited creep rupture testing from being performed on multi-rib specimens. Therefore, all accelerated creep testing via SIM (ASTM D6992) were performed on single rib specimens. Sample specific geogrid dimensions were used to convert tensile test loads to load per unit width values for ParaLink products only. The tensile test specimens tested were taken from the same rolls of material that were used for the creep testing. The measured geogrid dimensions discussed in Section 2 and provided in Appendix B, Section B.1, were used to convert tensile test loads to load per unit width values.

Table 5-2. Ultimate tensile strength (UTS) and associated strain.

Product	Single Rib UTS per ASTM D6637, T_{lot} (lb/rib @ % Strain)	Single Rib UTS per ASTM D6637, T_{lot} (lb/ft @ % Strain)
ParaWeb 30	7,029 @ 11.6%	NA
ParaWeb 50	11,807 @ 10.7%	NA
ParaWeb 135	35,130 @ 11.8%	NA
ParaLink 300	12,316 @ 10.8%	21,166 @ 10.8%
ParaLink 1000	29,168 @ 12.4%	73,224 @ 12.4%

(Conversion: 1 lbs = 0.00445 kN, 1 lb/ft = 0.0146 kN/m)

5.3 Creep Rupture Test Results

A total of 28 Stepped Isothermal Method (SIM) tests were run to fulfill the qualification requirements. Table 5-3 summarize the tests performed and their outcomes. Detailed test results, including creep curves for each specimen tested, are provided in Appendix F, Figures F-1 through F-28.

Table 5-3. Creep rupture test results for all tests conducted.

Style & Test Type	Creep Load (% of T_{lot})	Time to Rupture (log hrs)
ParaWeb 30 - SIM	70.00	6.9671
ParaWeb 30 - SIM	75.00	5.7666
ParaWeb 30 - SIM	80.00	3.6362
ParaWeb 30 - SIM	85.00	2.1750
ParaWeb 50 - SIM	70.00	7.0453
ParaWeb 50 – SIM	70.00	6.3200
ParaWeb 50 – SIM	73.00	6.4199
ParaWeb 50 – SIM	73.00	6.1543
ParaWeb 50 – SIM	76.00	5.2937
ParaWeb 50 – SIM	76.00	4.8878
ParaWeb 50 – SIM	79.00	4.0613
ParaWeb 50 – SIM	79.00	4.4808
ParaWeb 50 – SIM	82.00	3.1278
ParaWeb 50 – SIM	82.00	3.3442
ParaWeb 50 – SIM	85.00	2.3120
ParaWeb 50 – SIM	85.00	1.6706
ParaWeb 135 – SIM	71.00	6.7252
ParaWeb 135 – SIM	75.00	5.5371
ParaWeb 135 – SIM	79.00	4.0846
ParaWeb 135 – SIM	83.00	2.6451
ParaLink 300 – SIM	72.00	6.6291
ParaLink 300 – SIM	76.00	5.2294
ParaLink 300 – SIM	80.00	3.7831
ParaLink 300 – SIM	84.00	2.3855
ParaLink 1000 – SIM	70.00	6.8905
ParaLink 1000 – SIM	74.00	5.7714
ParaLink 1000 – SIM	78.00	4.4481
ParaLink 1000 – SIM	82.00	3.0249

*finished without rupture

5.3.1 Statistical Validation to Allow the Use of SIM Data to Establish Rupture Envelope

Validation of the use of SIM to extend the creep rupture data was conducted previously as reported in the 2010 NTPEP report for this product line (NTPEP Report 8508.1). For convenience, the results of that validation from this previous testing are summarized in Figure F-29 in Appendix F. Revalidation of the use of SIM for this product line was considered unnecessary in accordance with the NTPEP work plan and R69-15, since it was determined that the product line has not significantly changed in its formulation and

processing relative to the product line as previously tested and reported in the 2010 NTPEP report..

5.3.2 Statistical Validation to Allow the Use of Composite Rupture Envelope for Product Line

Details of the confidence limits evaluation for the product line conducted in accordance with R69-15 are contained in Appendix F. Figures F-30-33 provides plots of the creep rupture envelope with the confidence limits and the rupture envelopes for the primary product and the other tested products (i.e., ParaWeb 30, ParaWeb 135, ParaLink 300 and ParaLink 1000), illustrating this statistical test. Detailed calculation results for this statistical analysis are provided in Tables F-3 through F-5, and summarized in Table F-8. The results indicate that the rupture envelopes for the ParaWeb 30, ParaWeb 135, ParaLink 300 and ParaLink 1000 products are within the specified 90% confidence limits of the primary product (i.e., ParaWeb 50) creep rupture data, meeting R69-15 requirements. Thus, all the ParaWeb and ParaLink products tested can be used to construct a composite creep rupture envelope representing the entire product line. The calculation results for the statistical analysis and regression to create the full composite creep curve are provided in Table F-6.

5.4 Creep Rupture Envelope Development and Determination of RF_{CR}

In consideration of the statistical validation described in Section 5.3 of this report, a composite creep rupture envelope, using log-linear regression, was constructed as shown in Figure 5-1. The mix of conventional and accelerated (SIM) creep rupture test data points meets R69-15 requirements. Based on this plot of all data, the regression of the data shows that the r^2 value is 0.98 (see Table F-6 in Appendix F for details). Per R69-15, this degree of scatter in the data is acceptable for a composite rupture envelope.

The creep rupture envelope in Figure 5-1 should be considered valid for the entire The Linear Composites ParaWeb/ParaLink product line evaluated in this report. Since the temperature accelerated creep results produced through the SIM testing allowed time shifting of the creep rupture data points to over 1,000,000 hours (i.e., 114 years), no extrapolation uncertainty factor in accordance with R69-15 need be applied. Table 5-4 provides the estimated value of RF_{CR} for The Linear Composites ParaWeb/ParaLink product line based on the reported testing for a period of long-term loading of up to 100 years. This rupture envelope can be used to determine RF_{CR} for times other than 3, 75 and 100 years, if desired.

Table 5-4. RF_{CR} value for ParaWeb/ParaLink series for 3, 75 and 100 yr periods of loading/use.

Period of Use (in years)	RF_{CR} for Rupture – All ParaWeb/ParaLink Styles
3	1.28
75	1.36
100	1.36

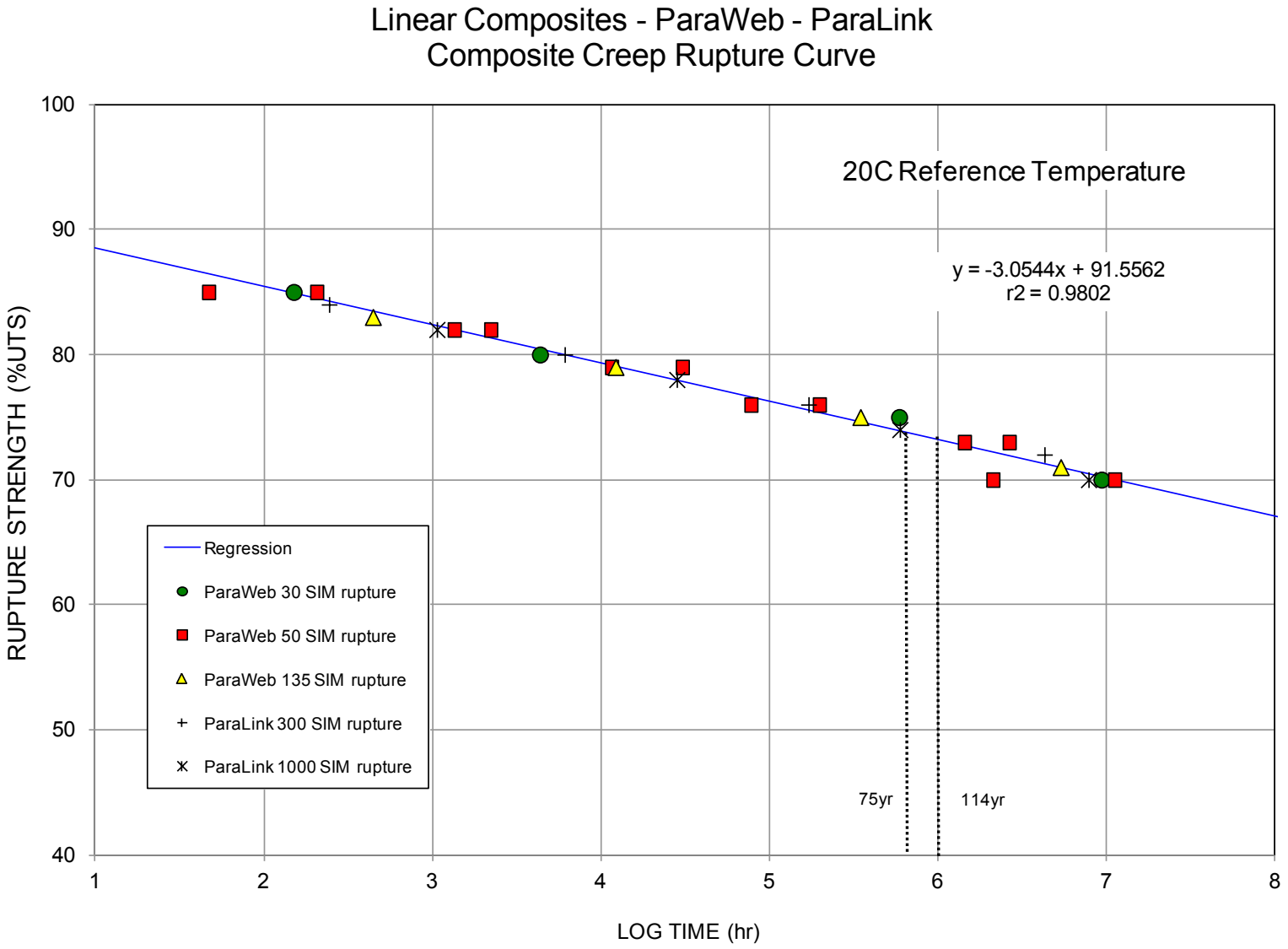

Figure 5-1. Composite creep rupture data/envelope for the ParaWeb/ParaLink product line.

6.0 Long-Term Durability Data (RF_D)

6.1 Durability Test Program

Basic molecular properties relating to durability were evaluated, allowing a "default" RF_D to be used in accordance with AASHTO R69-15, provided that the long-term environment in which the geosynthetic is to be used is considered to be non-aggressive in accordance with the AASHTO LRFD Bridge Design Specifications and R69-15. A non-aggressive long-term environment is described in these documents as follows:

- A soil ph of 4.5 to 9.0,
- A maximum particle size of 0.75 inches or less unless installation damage effects are specifically evaluated using full scale installation damage testing in accordance with ASTM D 5818,
- A soil organic content of 1% or less, and
- An effective design temperature at the site of 86°F (30°C) or less.

It should be noted that installation damage testing was conducted in accordance to ASTM D 5818 on an aggregate with a D50 = 1.12 inches (28.5 mm).

Other specific soil/environmental conditions that could be of concern to consider the site environment to be aggressive are discussed in Elias[2].

The index properties/test results obtained can be related to long-term performance of the polymer through correlation to longer-term laboratory durability performance tests and long-term experience. Note that long-term durability performance testing in accordance with R69-15 and the NTPEP work plan to allow direct calculation of RF_D was not available from the manufacturer, nor evaluated as part of the testing program for this product line.

For polyester (PET) geosynthetics, key durability issues to address include hydrolysis and ultraviolet (UV) oxidative degradation. To assess the potential for these types of degradation, index property tests to assess molecular weight, carboxyl end group content, and ultraviolet (UV) oxidative degradation are conducted. Criteria for test results obtained from each of these tests are provided in R69-15 as well as the AASHTO LRFD Bridge Design Specifications.

The UV degradation tests were conducted on the lightest weight product in the product line (35T) as recommended in R69-15. Since UV degradation attacks from the surface of the geosynthetic, the heavier the product, the more resistant it will be to UV degradation. Therefore, UV testing the lightest weight product should produce the most conservative result.

[2] Elias, V., 2000*, Corrosion/Degradation of Soil Reinforcements for Mechanically Stabilized Earth Walls and Reinforced Soil Slopes,* FHWA-NHI-00-0044, Federal Highway Administration, Washington, D.C.

The molecular weight and carboxyl end group content tests are conducted on the base yarn for the product series. Since for a product line the base yarn used must be the same for all products in the line, these tests on the base yarn will be applicable to all products in the product line.

Table 6-1. Independent durability testing required for NTPEP qualification.

Manufacturer: Linear Composites Limited **PRODUCT Line:** ParaWeb 30 to ParaWeb 135 ParaLink 300 to ParaLink 1500			
Tests Conducted	**Qualification (every 6 yrs) / Verification (every 3 yrs)**		
	Products Tested		**# of Tests (see Note 1)**
	Qualification	**Verification**	
All polymers, resistance to weathering @ 500 hrs (ASTM D4355), including before/after tensile strength	ParaWeb 30	NA	1
For polyesters, molecular weight determination (ASTM D4603 and GRI-GG8) – **on yarn/strip**	ParaWeb/ParaLink yarns	NA	1
For polyesters, carboxyl end group content determination (ASTM D 7409 and GRI-GG7) – **on yarn/strip**	ParaWeb/ParaLink yarns	NA	1
CEG-MW Testing Coating Removal, if necessary	NA	NA	0
Brittleness (AASHTO R69-15)	NA	NA	0
For polyolefins, long-term evaluation via Oxidative degradation (ISO/EN 13438:1999)	NA	NA	0
For polyesters, long-term evaluation via Hydrolytic degradation (AASHTO R69-15)	None	None	0
For polyolefins, long-term evaluation via Oxidative degradation (AASHTO R69-15)	NA	NA	0
Note 1: Each test is performed using the number of specimens required by the test standard. For example, for index tensile testing, a test is defined by 5 to 6 specimens. See the specific test procedures for details on this.			

6.2 Durability Test Results

A summary of the test results is provided in Table 6-2. This table also includes the criteria to allow the use of a default reduction factor for RF_D provided in R69-15 and the AASHTO LRFD Bridge Design Specifications. Detailed durability test results are provided in Appendix G.

Table 6-2. NTPEP durability test results for the ParaWeb/ParaLink product line and criteria to allow use of a default value for RF_D.

Polymer Type	Property	Test Method	Criteria to Allow Use of Default RF*	Test Result Obtained as Part of NTPEP Program
PP and HDPE	UV Oxidation Resistance	ASTM D4355	Min. 70% strength retained after 500 hrs in weatherometer	NA
PET	UV Oxidation Resistance	ASTM D4355	Min. 50% strength retained after 500 hrs in weatherometer if geosynthetic will be buried within one week, 70% if left exposed for more than one week.	93% strength retained
PP and HDPE	Thermo-Oxidation Resistance	ENV ISO 13438:1999, Method A (PP) or B (HDPE)	Min. 50% strength retained after 28 days (PP) or 56 days (HDPE)	NA
PET	Hydrolysis Resistance	Inherent Viscosity Method (ASTM D4603 and GRI Test Method GG8)	Min. Number Average Molecular Weight of 25,000	34,456
PET	Hydrolysis Resistance	ASTM D 7409 and GRI Test Method GG7	Max. Carboxyl End Group Content of 30	15.9

Note: PP = polypropylene, HDPE = high density polyethylene, PET = polyester

Based on these test results, all products in the product line meet the minimum UV requirement shown in Table 6-2. Regarding hydrolysis resistance, these test results shown in Table 6-2 indicate that this product line has adequate long-term resistance to hydrolysis to justify the use of a default value for RF_D, meeting the requirements in AASHTO R69-15.

Note that while no specific tests, other than installation damage, were conducted to evaluate the durability of the coating, because the hydrolysis resistance characterization was determined based on the base polymer, any potential coating degradation should have very little effect on the long-term durability of the strap product and the default value of RF_D selected. Typically, a default value of 1.3 for RF_D is selected. See AASHTO R69-15, or the document entitled "Use and Application of NTPEP Geosynthetic Reinforcement Test Results" (www.NTPEP.org), for guidance on the selection of a default value for RF_D.

7.0 Low Strain Creep Stiffness Data

7.1 Low Strain Creep Stiffness Test Program

Creep stiffness testing was conducted in accordance with AASHTO R69-15 and the NTPEP work plan. The creep stiffness determination was targeted to 2% strain at 1,000 hours.

Some of the products selected to represent the ParaWeb/ParaLink product line (i.e., ParaWeb 30, ParaWeb 50, ParaWeb 135, ParaLink 300 and ParaLink 1000) were tested for creep stiffness. Roll specific single rib short-term rapid loading tensile strength tests (T_{lot}) were conducted for each product for correlation purposes and to calculate load levels. A total of nine Ramp and Hold (R&H), 1,000 second creep tests, were conducted on each product. Three specimens were R&H tested at each of the following stresses: 5, 10 and 20% of the ultimate tensile strength (UTS). A linear regression based on %UTS and % strain at 0.1 hour was used to normalize strain curves to reduce the variability of the elastic portion of the strain curve. The % UTS required to obtain 2% strain at 1,000 hours was then determined. Three R&H tests and two 1,000 hour conventional creep tests (ASTM D5262, but as modified for low strain in R69-15 and using a single rib specimen) were conducted at this load. All tests were conducted at 68° F (20° C).

7.2 Ultimate Tensile Test Results for Creep Stiffness Test Program

The values provided in Table 7-1 represent the baseline, roll specific, ultimate tensile strength used to normalize the load level for the creep stiffness testing.

Table 7-1. Ultimate tensile strength (UTS) & associated strain.

Product	Single Rib UTS per ASTM D6637, T_{lot} (lb/rib @ % Strain)	Single Rib UTS per ASTM D6637, T_{lot} (lb/ft @ % Strain)
ParaWeb 30	7,029 @ 11.6%	NA
ParaWeb 50	11,807 @ 10.7%	NA
ParaWeb 135	35,130 @ 11.8%	NA
ParaLink 300	12,316 @ 10.8%	21,166 @ 10.8%
ParaLink 1000	29,168 @ 12.4%	73,224 @ 12.4%

(Conversion: 1 lbs = 0.00445 kN, 1 lb/ft = 0.0146 kN/m)

7.3 Creep Stiffness Test Results

Detailed test results are provided in Appendix H. Table 7-2 provides a summary of the creep stiffness values obtained. Note that the creep stiffness values at 1,000 hours and 5%UTS, 10%UTS and 20%UTS represent stiffness values at strains other than 2% strain. See Appendix H for details. Figure 7-1 shows the relationship between the measured tensile strength and the

creep stiffness. Considering the strong linear relationship between the creep stiffness and the product tensile strength, interpolation to other products in the product line not tested to determine creep stiffness values for those products is acceptable.

Table 7-2. Summary of creep stiffness test results.

Product Style	Average Creep Stiffness @ 1000 hours for 5% UTS Ramp & Hold (lb/rib)	Average Creep Stiffness @ 1000 hours for 10% UTS Ramp & Hold (lb/rib)	Average Creep Stiffness @ 1000 hours for 20% UTS Ramp & Hold (lb/rib)	Average Creep Stiffness for 2% strain @ 1000 hrs (lb/rib)
ParaWeb 30	50,615	37,857	36,686	**39,993**
ParaWeb 50	85,148	60,899	63,111	**66,896**
ParaWeb 135	162,859	141,312	147,200	**151,878**
ParaLink 300	65,247	54,065	69,419	**62,561**
ParaLink 1000	128,818	117,909	124,201	**124,185**

(Conversion: 1 lbs = 0.00445 kN)

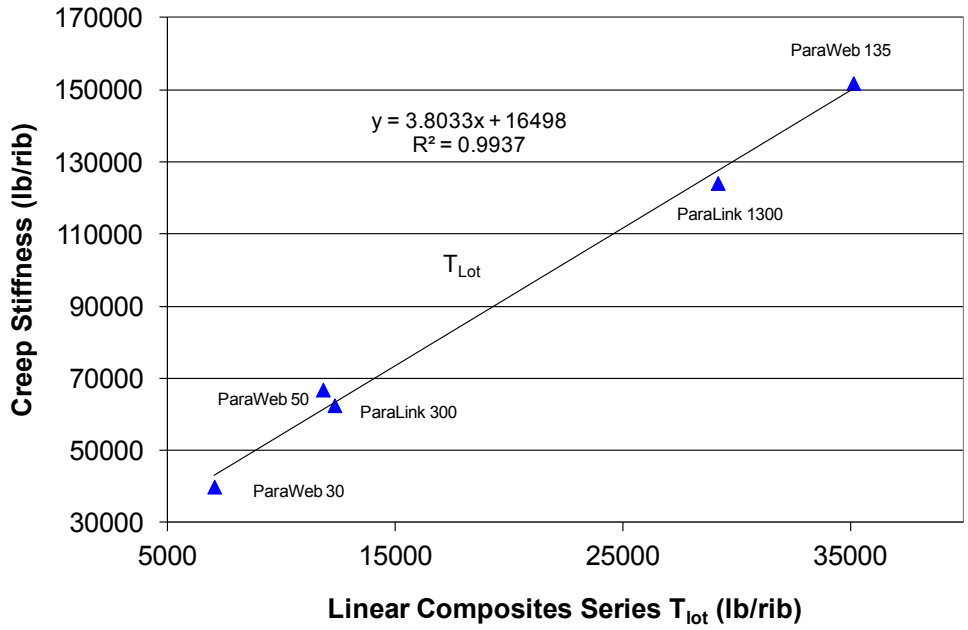

Figure 7-1. ParaWeb/ParaLink creep stiffness for 2 % strain @ 1000 hours.

To obtain the minimum likely stiffness value for each product in consideration of the MARV tensile strength, multiply the stiffness value from the plot by the ratio of T_{MARV}/T_{lot}. T_{MARV} is the minimum tensile strength, as provided by the manufacturer, for each product in the product line. T_{lot} is the actual roll specific tensile strength for the sample used in the creep stiffness testing.

APPENDICES

Appendix A: NTPEP Oversight Committee

National Transportation Product Evaluation Program (NTPEP)

Chair: Aaron Gillispie, West Virginia
Vice Chair: Chris Peoples, North Carolina
AASHTO Staff: Katheryn Malusky, Ronnie Malles, Vince Glick, Maribel Wong, Ryan Fragapane, Jonathan Sirianni

Member Department	Member/Delegate	Phone Number	EmailAddress	Voting Member
Alabama Department of Transportation	George Conner	(334) 242-6272	connerg@dot.state.al.us	Non-Voting Member
	J. Michelle Owens	(334) 353-6940	owensm@dot.state.al.us	Non-Voting Member
	Kidada Dixon	(334) 353-6940	dixonk@dot.state.al.us	Voting Member
	Tracy Stegmaier	(334) 242-6244	stegmaiert@dot.state.al.us	Non-Voting Member
Alaska Department of Transportation and Public Facilities	Michael San Angelo	(907) 269-6234	michael.sanangelo@alaska.gov	Voting Member
Arizona Department of Transportation	Paul Burch	(602) 712-8085	pburch@azdot.gov	Voting Member
	Stephanie Huang	(602) 712-6430	shuang@azdot.gov	Non-Voting Member
Arkansas Department of Transportation	Charles Palmer	(501) 569-2185	kevin.palmer@ardot.gov	Non-Voting Member
	Michael Benson	(501) 569-2185	michael.benson@ardot.gov	Voting Member
California Department of Transportation	Tim Greutert	(916) 227-7263	timothy.greutert@dot.ca.gov	Voting Member
Colorado Department of Transportation	David Kotzer	(303) 398-6566	david.kotzer@state.co.us	Voting Member
	K.C. Matthews	(303) 757-9543	kc.matthews@state.co.us	Non-Voting Member
Connecticut Department of Transportation	Andrew Mroczkowski	(860) 258-0304	andrew.mroczkowski@ct.gov	Non-Voting Member
	Bradley Overturf	(860) 594-2089	bradley.overturf@ct.gov	Voting Member
Delaware Department of Transportation	Jennifer Pinkerton	(302) 760-2400	Jennifer.Pinkerton@state.de.us	Voting Member
District of Columbia Department of Transportation	Rezene Medhani	(202) 654-6030	rezene.medhani@dc.gov	Voting Member
Florida Department of Transportation	Karen Byram	(850) 414-4353	karen.byram@dot.state.fl.us	Voting Member
	Paul Vinik	(352) 955-6649	paul.vinik@dot.state.fl.us	Non-Voting Member
Georgia Department of Transportation	George Lian	(404) 608-4824	glian@dot.ga.gov	Non-Voting Member
	Richard Douds	(404) 608-4805	rdouds@dot.ga.gov	Voting Member
Hawaii Department of Transportation	Eric Shishido	(808) 832-3405	eric.shishido@hawaii.gov	Voting Member
Idaho Transportation Department	Gary Sanderson	(208) 334-8211	gary.sanderson@itd.idaho.gov	Non-Voting Member
	Kevin Sablan	(208) 334-8000	kevin.sablan@itd.idaho.gov	Voting Member
Illinois Department of Transportation	Jim Trepanier	(217) 782-9607	james.trepanier@illinois.gov	Voting Member
Indiana Department of Transportation	Michael Pelham	(317) 610-7251	mpelham@indot.in.gov	Voting Member
Iowa Department of Transportation	Kevin Jones	(515) 239-1237	kevin.jones@iowadot.us	Voting Member
	Mahbub Khoda	(515) 239-1649	mahbub.khoda@dot.iowa.gov	Non-Voting Member
	Scott Sommers	(515) 239-1259	scott.sommers@iowadot.us	Non-Voting Member
Kansas Department of Transportation	Dave Meggers	(785) 291-3845	dave.meggers@ks.gov	Voting Member
Kentucky Transportation Cabinet	Brandi Mitchell	(502) 564-3160	brandi.mitchell@ky.gov	Voting Member
	Stephen Bowling	(502) 564-4780	stephen.bowling@ky.gov	Non-Voting Member
Louisiana Department of Transportation and Development	Jason Davis	(225) 248-4106	jason.davis@la.gov	Voting Member
	Michael Grubb	(225) 248-4121	michael.grubb@la.gov	Non-Voting Member
Maryland Department of Transportation	Dan Sajedi	(443) 572-5162	dsajedi@sha.state.md.us	Non-Voting Member
	David Malburg	(301) 356-8647	dmalburg@sha.state.md.us	Non-Voting Member
	Rodney Wynn	(443) 572-5043	rwynn@sha.state.md.us	Voting Member
Massachusetts Department of Transportation	John Grieco	(857) 368-3410	john.grieco@state.ma.us	Voting Member

Michigan Department of Transportation	John Staton	(517) 322-5701	statonj@michigan.gov	Voting Member
Minnesota Department of Transportation	Allen Gallistel	(651) 366-5545	allen.gallistel@state.mn.us	Voting Member
Mississippi Department of Transportation	Andy McNair	(601) 359-1454	amcnair@mdot.ms.gov	Non-Voting Member
	Heath Patterson	(601) 359-7113	hpatterson@mdot.ms.gov	Non-Voting Member
Missouri Department of Transportation	Julie Lamberson	(573) 751-2847	julie.lamberson@modot.mo.gov	Non-Voting Member
	Todd Bennett	(573) 751-1045	Todd.Bennett@modot.mo.gov	Voting Member
Montana Department of Transportation	Anson Moffett	(406) 444-5407	amoffett@mt.gov	Non-Voting Member
	Ross Metcalfe	(406) 444-9201	rmetcalfe@mt.gov	Voting Member
Nebraska Department of Transportation	Mark Lindemann	(402) 479-4752	mark.lindemann@nebraska.gov	Non-Voting Member
	Mick Syslo	(402) 479-4750	Mick.Syslo@nebraska.gov	Voting Member
Nevada Department of Transportation	Changlin Pan	(775) 888-7789	cpan@dot.state.nv.us	Voting Member
New Hampshire Department of Transportation	Susan Dearborn	(603) 271-1628	sdearborn@dot.state.nh.us	Voting Member
New Jersey Department of Transportation	Paul Hanczaryk	(609) 530-2307	Paul.Hanczaryk@dot.nj.gov	Voting Member
New Mexico Department of Transportation	James Gallegos	(505) 660-3541	James.Gallegos@state.nm.us	Voting Member
	Rick Padilla	(505) 827-0192	rick.padilla@state.nm.us	Non-Voting Member
New York State Department of Transportation	Michael Stelzer	(518) 457-4595	mstelzer@dot.state.ny.us	Voting Member
North Carolina Department of Transportation	Chris Peoples	(919) 329-4000	cpeoples@ncdot.gov	Voting Vice Chair
North Dakota Department of Transportation	Scott Wutzke	(701) 328-6902	swwutzke@nd.gov	Voting Member
Ohio Department of Transportation	Brad Young	(614) 351-2882	Brad.Young2@dot.ohio.gov	Voting Member
Oklahoma Department of Transportation	Kenny Seward	(405) 522-4999	kseward@odot.org	Voting Member
	Matt Romero	(405) 522-4918	mromero@odot.org	Non-Voting Member
Oregon Department of Transportation	Dean Chess	(503) 986-3059	dean.m.chess@odot.state.or.us	Voting Member
Pennsylvania Department of Transportation	David Kuniega	(717) 787-3966	dkuniega@pa.gov	Voting Member
	Timothy Ramirez	(717) 783-6602	tramirez@pa.gov	Non-Voting Member
Puerto Rico Department of Transportation and Public Works	Miguel Estrella	(787) 729-1592	mestrella@dtop.pr.gov	Voting Member
Rhode Island Department of Transportation	Deborah Munroe	(401) 222-2524 ext. 4111	deborah.munroe@dot.ri.gov	Voting Member
	Jose Lima	(401) 222-3030	jose.lima@dot.ri.gov	Non-Voting Member
South Carolina Department of Transportation	Merrill Zwanka	(803) 737-6682	zwankame@scdot.org	Voting Member
	Temple Short	(803) 737 6648	shorttk@scdot.org	Non-Voting Member
South Dakota Department of Transportation	Dave Huft	(605) 773-3358	dave.huft@state.sd.us	Non-Voting Member
	Joe Feller	(605) 773-3401	joe.feller@state.sd.us	Voting Member
Tennessee Department of Transportation	Danny Lane	(615) 350-4175	danny.lane@tn.gov	Voting Member
	Heather Hall	(615) 350-4150	heather.purdy.hall@tn.gov	Non-Voting Member
Texas Department of Transportation	Gerald Peterson	(512) 506-5821	jerry.peterson@txdot.gov	Voting Member
	Scott Koczman	(713) 802-5025	Scott.Koczman@txdot.gov	Non-Voting Member
Utah Department of Transportation	Bin Shi	(801) 965-4303	bshi@utah.gov	Voting Member
	David Stevens	(801) 589-8340	davidstevens@utah.gov	Non-Voting Member
	Ken Berg	(801) 965-4321	kenberg@utah.gov	Non-Voting Member
Vermont Agency of Transportation	Mladen Gagulic	(802) 828-6405	mladen.gagulic@vermont.gov	Voting Member
Virginia Department of Transportation	C. Fleming	(804) 328-3126	cw.fleming@vdot.virginia.gov	Non-Voting Member
	James Swisher	(804) 328-3121	James.Swisher@VDOT.Virginia.gov	Non-Voting Member
	William Bailey	(804) 328-3106	bill.bailey@vdot.virginia.gov	Voting Member

Washington State Department of Transportation	Kurt Williams	(360) 709-5410	willikr@wsdot.wa.gov	Voting Member
	Tony Allen	(360) 709-5450	allent@wsdot.wa.gov	Non-Voting Member
West Virginia Department of Transportation	Aaron Gillispie	(304) 558-3001	aaron.c.gillispie@wv.gov	Voting Chair
	Greg Bradford	(304) 558-9882	Greg.F.Bradford@wv.gov	Voting Member
Wisconsin Department of Transportation	John Rublein	(608) 266-1113	john.rublein@dot.wi.gov	Voting Member
	Peter Kemp	(608) 246-7953	peter.kemp@dot.wi.gov	Non-Voting Member
Wyoming Department of Transportation	Andrew Freeman	(307) 777-4722	andy.freeman@wyo.gov	Non-Voting Member

Appendix B: Product Geometric and Production Details

B.1 Product Geometric Information

Table B-1 (Part 1). Typical and measured MD geogrid geometry for the ParaWeb product line.

Machine Direction (MD) Ribs								
Style	Width (in)		Spacing (in)		Aperture Size (in)		Rib Thickness (in)	
	Typical Values	As Measured *	Typical Values	As Measured *	Typical Values	As Measured *	Typical Values	As Measured *
ParaWeb 2S 30	3.19 - 3.35		NA		NA		0.09	
ParaWeb 2D 30	3.19 - 3.35		NA		NA		0.07	
ParaWeb 2E 30	3.19 - 3.35	3.31	NA		NA		0.06	0.061
ParaWeb 2S 40	3.23 - 3.39		NA		NA		0.10	
ParaWeb 2D 40	3.23 - 3.39		NA		NA		0.09	
ParaWeb 2E 40	3.19 - 3.35	3.33	NA		NA		0.07	0.074
ParaWeb 2S 50	3.47 - 3.63		NA		NA		0.14	
ParaWeb 2D 50	3.47 - 3.63		NA		NA		0.10	
ParaWeb 2E 50	3.35 - 3.51	3.41	NA		NA		0.08	0.072
ParaWeb 2S 75	3.47 - 3.63		NA		NA		0.16	
ParaWeb 2D 75	3.47 - 3.63		NA		NA		0.12	
ParaWeb 2E 75	3.47 - 3.63	3.52	NA		NA		0.10	0.103
ParaWeb 2S 100	3.47 - 3.63		NA		NA		0.24	
ParaWeb 2D 100	3.47 - 3.63		NA		NA		0.15	
ParaWeb 2E 100	3.47 - 3.63	3.60	NA		NA		0.12	0.124
ParaWeb 2S 135			NA		NA			
ParaWeb 2D 135			NA		NA			
ParaWeb 2E 135		3.56	NA		NA			0.174

Table B-1 (Part 2). Typical and measured MD geogrid geometry for the ParaWeb product line.

Machine Direction (MD) Ribs								
Style	**Width (in)**		**Spacing (in)**		**Aperture Size (in)**		**Rib Thickness (in)**	
	Typical Values	**As Measured ***	**Typical Values**	**As Measured ***	**Typical Values**	**As Measured ***	**Typical Values**	**As Measured ***
ParaWeb MS 45	1.89 - 2.05		NA		NA		0.14	
ParaWeb MD 45	1.89 - 2.05		NA		NA		0.13	
ParaWeb ME 45	1.89 - 2.05	1.91	NA		NA		0.11	0.091
ParaWeb MS 54	2.45 - 2.6		NA		NA		0.14	
ParaWeb MD 54	2.45 - 2.6		NA		NA		0.13	
ParaWeb ME 54	2.41 - 2.56	2.45	NA		NA		0.10	0.092
ParaWeb MS 63	2.49 - 2.64		NA		NA		0.15	
ParaWeb MD 63	2.49 - 2.64		NA		NA		0.15	
ParaWeb ME 63	2.45 - 2.6	2.51	NA		NA		0.11	0.101

(Conversions: 1 in = 25.4 mm)

*Average of 5 readings obtained during NTPEP testing. Full test results in tables B-8 through B-25.

Table B-2. Typical and measured MD geogrid geometry for the ParaLink product line.

Machine Direction (MD) Ribs								
Style	Width (in)		Spacing (in)		Aperture Size (in)		Rib Thickness (in)	
	Typical Values	As Measured*	Typical Values	As Measured*	Typical Values	As Measured*	Typical Values	As Measured*
ParaLink 300	3.46	3.35	7.09	6.766	37.01	40.7	0.071	0.073
ParaLink 400	3.54	3.45	7.09	7.057	37.01	37.0	0.094	0.088
ParaLink 500	3.54	3.55	7.09	7.075	37.01	36.4	0.118	0.101
ParaLink 600	3.54	3.58	7.09	7.069	37.01	36.8	0.150	0.124
ParaLink 700	3.58	3.60	7.09	7.025	37.01	36.5	0.165	0.145
ParaLink 800	3.58	3.57	5.91	5.830	37.01	36.5	0.150	0.141
ParaLink 1000	3.58	3.54	4.93	4.817	37.01	36.7	0.165	0.153
ParaLink 1200	3.58	3.56	3.94	3.952	37.01	36.6	0.150	0.139
ParaLink 1500	3.58	3.63	3.94	3.943	37.01	36.7	0.150	0.166

(Conversions: 1 in = 25.4 mm)

Table B-3. Typical and measured XD geogrid geometry for the ParaLink product line.

Cross-Machine Direction (XD) Ribs								
Style	Width (in)		Spacing (in)		Aperture Size (in)		Rib Thickness (in)	
	Typical Values	As Measured*	Typical Values	As Measured*	Typical Values	As Measured*	Typical Values	As Measured*
ParaLink 300	2.33 - 2.41	2.47	39.37	43.179	3.70	3.41	0.043	0.031
ParaLink 400	2.33 - 2.41	2.30	39.37	39.275	3.62	3.61	0.043	0.036
ParaLink 500	2.33 - 2.41	2.39	39.37	38.809	3.54	3.52	0.043	0.033
ParaLink 600	2.33 - 2.41	2.31	39.37	39.068	3.50	3.49	0.043	0.035
ParaLink 700	2.33 - 2.41	2.31	39.37	38.832	3.50	3.42	0.043	0.037
ParaLink 800	2.33 - 2.41	2.31	39.37	38.764	2.36	2.26	0.043	0.034
ParaLink 1000	2.33 - 2.41	2.34	39.37	39.076	1.34	1.27	0.043	0.036
ParaLink 1200	2.33 - 2.41	2.31	39.37	38.887	0.35	0.39	0.043	0.034
ParaLink 1500	2.33 - 2.41	2.30	39.37	39.044	0.35	0.31	0.043	0.032

(Conversions: 1 in = 25.4 mm)

*Average of 5 readings obtained during NTPEP testing. Full test results in tables B-8 through B-25.

Table B-4. Typical and measured geogrid junction thickness for the ParaWeb product line.

Style	Junction Thickness (in)	
	Typical Values	As Measured*
ParaWeb 2S/2D/2E 30	NA	NA
ParaWeb 2S/2D/2E 40	NA	
ParaWeb 2S/2D/2E 50	NA	NA
ParaWeb 2S/2D/2E 75	NA	
ParaWeb 2S/2D/2E 100	NA	
ParaWeb 2S/2D/2E 135	NA	NA
ParaWeb MS/MD/ME 45	NA	
ParaWeb MS/MD/ME 54	NA	
ParaWeb MS/MD/ME 63	NA	

(Conversions: 1 in = 25.4 mm)
*Average of 5 readings obtained during NTPEP testing. Full test results in tables B-8 through B-25.

Table B-5. Typical and measured geogrid junction thickness for the ParaLink product line.

Style	Junction Thickness (in)	
	Typical Values	As Measured*
ParaLink 300	NA	0.105
ParaLink 400	NA	0.132
ParaLink 500	NA	0.137
ParaLink 600	NA	0.164
ParaLink 700	NA	0.185
ParaLink 800	NA	0.183
ParaLink 1000	NA	0.196
ParaLink 1200	NA	0.175
ParaLink 1500	NA	0.206

(Conversions: 1 in = 25.4 mm)
*Average of 5 readings obtained during NTPEP testing. Full test results in tables B-8 through B-25.

Table B-6. Typical and measured geogrid unit weight for the ParaWeb product line.

Geogrid Style/Type	Typical Weight (oz/yd^2)	Typical Weight (oz/yd)	Measured Weight, per ASTM D5261 (oz/yd)
ParaWeb 2S 30	51.41	4.67	
ParaWeb 2D 30	45.18	4.10	
ParaWeb 2E 30	30.95	2.81	2.67
ParaWeb 2S 40	64.26	5.91	
ParaWeb 2D 40	58.70	5.40	
ParaWeb 2E 40	38.78	3.57	3.52
ParaWeb 2S 50	75.46	7.44	
ParaWeb 2D 50	63.97	6.31	
ParaWeb 2E 50	42.08	4.01	3.78
ParaWeb 2S 75	98.42	9.71	
ParaWeb 2D 75	83.99	8.28	
ParaWeb 2E 75	58.72	5.79	5.94
ParaWeb 2S 100	123.68	12.20	
ParaWeb 2D 100	102.03	10.06	
ParaWeb 2E 100	79.06	7.80	7.73
ParaWeb 2S 135			
ParaWeb 2D 135			
ParaWeb 2E 135			11.66
ParaWeb MS 45	86.22	4.72	
ParaWeb MD 45	78.54	4.30	
ParaWeb ME 45	60.23	3.30	2.89
ParaWeb MS 54	91.81	6.44	
ParaWeb MD 54	82.58	5.79	
ParaWeb ME 54	61.86	4.34	4.03
ParaWeb MS 63	105.84	7.54	
ParaWeb MD 63	95.39	6.80	
ParaWeb ME 63	69.20	4.93	4.46

(Conversion: 1 oz/ yd = 31.01 g/m)

*Average of 5 readings obtained during NTPEP testing. Full test results in tables B-8 through B-25.

Table B-7. Typical and measured geogrid unit weight for the ParaLink product line.

Geogrid Style/Type	Typical Weight (oz/yd^2)	Measured Weight, per ASTM D5261 (oz/yd^2)
ParaLink 300	23.30	22.57
ParaLink 400	29.82	28.47
ParaLink 500	36.02	35.45
ParaLink 600	44.58	42.90
ParaLink 700	54.33	49.83
ParaLink 800	63.19	57.99
ParaLink 1000	79.72	75.40
ParaLink 1200	93.60	87.51
ParaLink 1500	118.00	109.25

(Conversion: 1 oz/ yd^2 = 33.9 g/m^2)

*Average of 5 readings obtained during NTPEP testing. Full test results in tables B-8 through B-25.

Table B-8. Geometric measurements for ParaWeb 30

PARAMETER		TEST REPLICATE NUMBER 1	2	3	4	5	MEAN	STD. DEV.
Mass/Unit Area (ASTM D 5261)								
Specimen Width (in)	3.31							
Specimen Length (in)	24							
Mass(g)		50.46	50.46	50.46	50.56	50.85		
Mass/unit length (oz/yd)		2.67	2.67	2.67	2.67	2.69	**2.67**	0.01
Mass/unit length (g/meter)		82.8	82.8	82.8	82.9	83.4	**82.9**	0.3
Aperature Size (Calipers)								
MD - Aperature Size (in)		Not Applicable						
MD - Aperature Size (mm)		Not Applicable						
TD - Aperature Size (in)		Not Applicable						
TD - Aperature Size (mm)		Not Applicable						
Rib Width (Calipers)								
MD - Width (in)		3.31	3.31	3.31	3.30	3.30	**3.31**	0.01
MD - Width (mm)		84.1	84.1	84.1	83.8	83.8	**84.0**	0.1
TD - Width (in)		Not Applicable						
TD - Width (mm)		Not Applicable						
Rib Thickness (Calipers)								
MD - Thickness (in)		0.062	0.061	0.061	0.061	0.061	**0.061**	0.000
MD - Thickness (mm)		1.56	1.54	1.54	1.55	1.55	**1.55**	0.01
TD - Thickness (in)		Not Applicable						
TD - Thickness (mm)		Not Applicable						
Node/Junction Thickness (Calipers)								
Thickness (in)		Not Applicable						
Thickness (mm)		Not Applicable						

MD - Machine Direction TD - Transverse/Cross Machine Direction NP - Not Provided

The testing herein is based upon accepted industry practice as well as the test method listed. Test results reported herein do not apply to samples other than those tested.

Table B-9. Geometric measurements for ParaWeb 40

PARAMETER		TEST REPLICATE NUMBER 1	2	3	4	5	MEAN	STD. DEV.
Mass/Unit Area (ASTM D 5261)								
Specimen Width (in)	3.25							
Specimen Length (in)	24							
Mass(g)		66.83	66.29	66.53	66.44	66.50		
Mass/unit length (oz/yd)		3.53	3.50	3.52	3.51	3.52	**3.52**	0.01
Mass/unit length (g/meter)		109.6	108.7	109.1	109.0	109.1	**109.1**	0.3
Aperature Size (Calipers)								
MD - Aperature Size (in)		Not Applicable						
MD - Aperature Size (mm)		Not Applicable						
TD - Aperature Size (in)		Not Applicable						
TD - Aperature Size (mm)		Not Applicable						
Rib Width (Calipers)								
MD - Width (in)		3.33	3.34	3.33	3.33	3.33	**3.33**	0.00
MD - Width (mm)		84.5	84.7	84.7	84.5	84.6	**84.6**	0.1
TD - Width (in)		Not Applicable						
TD - Width (mm)		Not Applicable						
Rib Thickness (Calipers)								
MD - Thickness (in)		0.068	0.076	0.075	0.076	0.076	**0.074**	0.004
MD - Thickness (mm)		1.71	1.93	1.91	1.93	1.93	**1.88**	0.09
TD - Thickness (in)		Not Applicable						
TD - Thickness (mm)		Not Applicable						
Node/Junction Thickness (Calipers)								
Thickness (in)		Not Applicable						
Thickness (mm)		Not Applicable						

MD - Machine Direction TD - Transverse/Cross Machine Direction NP - Not Provided

The testing herein is based upon accepted industry practice as well as the test method listed. Test results reported herein do not apply to samples other than those tested.

Table B-10. Geometric measurements for ParaWeb 45

PARAMETER		TEST REPLICATE NUMBER 1	2	3	4	5	MEAN	STD. DEV.
Mass/Unit Area (ASTM D 5261)								
Specimen Width (in)	2.00							
Specimen Length (in)	24							
Mass(g)		54.90	54.66	54.53	54.60	54.69		
Mass/unit length (oz/yd)		2.90	2.89	2.88	2.89	2.89	**2.89**	0.01
Mass/unit length (g/meter)		90.1	89.7	89.5	89.6	89.7	**89.7**	0.2
Aperature Size (Calipers)								
MD - Aperature Size (in)		Not Applicable						
MD - Aperature Size (mm)		Not Applicable						
TD - Aperature Size (in)		Not Applicable						
TD - Aperature Size (mm)		Not Applicable						
Rib Width (Calipers)								
MD - Width (in)		1.91	1.91	1.91	1.91	1.91	**1.91**	0.00
MD - Width (mm)		48.5	48.5	48.6	48.5	48.5	**48.5**	0.1
TD - Width (in)		Not Applicable						
TD - Width (mm)		Not Applicable						
Rib Thickness (Calipers)								
MD - Thickness (in)		0.092	0.089	0.091	0.092	0.091	**0.091**	0.001
MD - Thickness (mm)		2.34	2.26	2.30	2.34	2.30	**2.31**	0.03
TD - Thickness (in)		Not Applicable						
TD - Thickness (mm)		Not Applicable						
Node/Junction Thickness (Calipers)								
Thickness (in)		Not Applicable						
Thickness (mm)		Not Applicable						

MD - Machine Direction TD - Transverse/Cross Machine Direction NP - Not Provided

The testing herein is based upon accepted industry practice as well as the test method listed. Test results reported herein do not apply to samples other than those tested.

Table B-11. Geometric measurements for ParaWeb 50

PARAMETER		TEST REPLICATE NUMBER 1	2	3	4	5	MEAN	STD. DEV.
Mass/Unit Area (ASTM D 5261)								
Specimen Width (in)	3.41							
Specimen Length (in)	24							
Mass(g)		71.46	71.57	71.67	71.49	71.53		
Mass/unit length (oz/yd)		3.78	3.78	3.79	3.78	3.78	**3.78**	0.00
Mass/unit length (g/meter)		117	117	118	117	117	**117**	0
Aperature Size (Calipers)								
MD - Aperature Size (in)		Not Applicable						
MD - Aperature Size (mm)		Not Applicable						
TD - Aperature Size (in)		Not Applicable						
TD - Aperature Size (mm)		Not Applicable						
Rib Width (Calipers)								
MD - Width (in)		3.41	3.42	3.41	3.42	3.41	**3.41**	0.01
MD - Width (mm)		86.6	86.9	86.6	86.9	86.6	**86.7**	0.1
TD - Width (in)		Not Applicable						
TD - Width (mm)		Not Applicable						
Rib Thickness (Calipers)								
MD - Thickness (in)		0.072	0.071	0.071	0.073	0.072	**0.072**	0.001
MD - Thickness (mm)		1.82	1.79	1.80	1.84	1.83	**1.82**	0.02
TD - Thickness (in)		Not Applicable						
TD - Thickness (mm)		Not Applicable						
Node/Junction Thickness (Calipers)								
Thickness (in)		Not Applicable						
Thickness (mm)		Not Applicable						

MD - Machine Direction TD - Transverse/Cross Machine Direction NP - Not Provided

The testing herein is based upon accepted industry practice as well as the test method listed. Test results reported herein do not apply to samples other than those tested.

Table B-12. Geometric measurements for ParaWeb 54

PARAMETER		TEST REPLICATE NUMBER 1	2	3	4	5	MEAN	STD. DEV.
Mass/Unit Area (ASTM D 5261)								
Specimen Width (in)	2.50							
Specimen Length (in)	24							
Mass(g)		76.58	76.13	76.11	76.10	76.26		
Mass/unit length (oz/yd)		4.05	4.02	4.02	4.02	4.03	**4.03**	0.01
Mass/unit length (g/meter)		125.6	124.9	124.9	124.8	125.1	**125.1**	0.3
Aperature Size (Calipers)								
MD - Aperature Size (in)		Not Applicable						
MD - Aperature Size (mm)		Not Applicable						
TD - Aperature Size (in)		Not Applicable						
TD - Aperature Size (mm)		Not Applicable						
Rib Width (Calipers)								
MD - Width (in)		2.45	2.45	2.45	2.45	2.45	**2.45**	0.00
MD - Width (mm)		62.3	62.3	62.3	62.1	62.1	**62.2**	0.1
TD - Width (in)		Not Applicable						
TD - Width (mm)		Not Applicable						
Rib Thickness (Calipers)								
MD - Thickness (in)		0.090	0.092	0.092	0.093	0.093	**0.092**	0.001
MD - Thickness (mm)		2.29	2.34	2.34	2.35	2.35	**2.33**	0.03
TD - Thickness (in)		Not Applicable						
TD - Thickness (mm)		Not Applicable						
Node/Junction Thickness (Calipers)								
Thickness (in)		Not Applicable						
Thickness (mm)		Not Applicable						

MD - Machine Direction TD - Transverse/Cross Machine Direction NP - Not Provided

The testing herein is based upon accepted industry practice as well as the test method listed. Test results reported herein do not apply to samples other than those tested.

Table B-13. Geometric measurements for ParaWeb 63

PARAMETER	TEST REPLICATE NUMBER 1	2	3	4	5	MEAN	STD. DEV.
Mass/Unit Area (ASTM D 5261)							
Specimen Width (in) 2.50							
Specimen Length (in) 24							
Mass(g)	84.19	84.30	84.18	84.50	84.29		
Mass/unit length (oz/yd)	4.45	4.46	4.45	4.47	4.46	**4.46**	0.01
Mass/unit length (g/meter)	138.1	138.3	138.1	138.6	138.3	**138.3**	0.2
Aperature Size (Calipers)							
MD - Aperature Size (in)	Not Applicable						
MD - Aperature Size (mm)	Not Applicable						
TD - Aperature Size (in)	Not Applicable						
TD - Aperature Size (mm)	Not Applicable						
Rib Width (Calipers)							
MD - Width (in)	2.51	2.51	2.51	2.51	2.51	**2.51**	0.00
MD - Width (mm)	63.8	63.8	63.8	63.7	63.8	**63.8**	0.0
TD - Width (in)	Not Applicable						
TD - Width (mm)	Not Applicable						
Rib Thickness (Calipers)							
MD - Thickness (in)	0.105	0.100	0.100	0.100	0.103	**0.101**	0.002
MD - Thickness (mm)	2.65	2.54	2.53	2.54	2.62	**2.58**	0.06
TD - Thickness (in)	Not Applicable						
TD - Thickness (mm)	Not Applicable						
Node/Junction Thickness (Calipers)							
Thickness (in)	Not Applicable						
Thickness (mm)	Not Applicable						

MD - Machine Direction TD - Transverse/Cross Machine Direction NP - Not Provided

The testing herein is based upon accepted industry practice as well as the test method listed. Test results reported herein do not apply to samples other than those tested.

Table B-14. Geometric measurements for ParaWeb 75

PARAMETER		TEST REPLICATE NUMBER 1	2	3	4	5	MEAN	STD. DEV.
Mass/Unit Area (ASTM D 5261)								
Specimen Width (in)	3.50							
Specimen Length (in)	24							
Mass(g)		113.00	112.55	112.26	112.41	112.04		
Mass/unit length (oz/yd)		5.97	5.95	5.93	5.94	5.92	**5.94**	0.02
Mass/unit length (g/meter)		185.4	184.6	184.2	184.4	183.8	**184.5**	0.6
Aperature Size (Calipers)								
MD - Aperature Size (in)		Not Applicable						
MD - Aperature Size (mm)		Not Applicable						
TD - Aperature Size (in)		Not Applicable						
TD - Aperature Size (mm)		Not Applicable						
Rib Width (Calipers)								
MD - Width (in)		3.52	3.51	3.52	3.51	3.52	**3.52**	0.00
MD - Width (mm)		89.5	89.3	89.4	89.3	89.3	**89.3**	0.1
TD - Width (in)		Not Applicable						
TD - Width (mm)		Not Applicable						
Rib Thickness (Calipers)								
MD - Thickness (in)		0.106	0.103	0.104	0.103	0.101	**0.103**	0.002
MD - Thickness (mm)		2.69	2.60	2.64	2.60	2.57	**2.62**	0.05
TD - Thickness (in)		Not Applicable						
TD - Thickness (mm)		Not Applicable						
Node/Junction Thickness (Calipers)								
Thickness (in)		Not Applicable						
Thickness (mm)		Not Applicable						

MD - Machine Direction TD - Transverse/Cross Machine Direction NP - Not Provided

The testing herein is based upon accepted industry practice as well as the test method listed. Test results reported herein do not apply to samples other than those tested.

Table B-15. Geometric measurements for ParaWeb 100

PARAMETER		TEST REPLICATE NUMBER 1	2	3	4	5	MEAN	STD. DEV.
Mass/Unit Area (ASTM D 5261)								
Specimen Width (in)	3.50							
Specimen Length (in)	24							
Mass(g)		145.09	146.49	146.69	146.47	146.67		
Mass/unit length (oz/yd)		7.67	7.74	7.75	7.74	7.75	**7.73**	0.04
Mass/unit length (g/meter)		238.0	240.3	240.6	240.3	240.6	**240.0**	1.1
Aperature Size (Calipers)								
MD - Aperature Size (in)		Not Applicable						
MD - Aperature Size (mm)		Not Applicable						
TD - Aperature Size (in)		Not Applicable						
TD - Aperature Size (mm)		Not Applicable						
Rib Width (Calipers)								
MD - Width (in)		3.58	3.58	3.61	3.61	3.60	**3.60**	0.02
MD - Width (mm)		90.9	91.0	91.6	91.8	91.4	**91.3**	0.4
TD - Width (in)		Not Applicable						
TD - Width (mm)		Not Applicable						
Rib Thickness (Calipers)								
MD - Thickness (in)		0.124	0.121	0.121	0.127	0.127	**0.124**	0.003
MD - Thickness (mm)		3.14	3.07	3.06	3.23	3.23	**3.14**	0.08
TD - Thickness (in)		Not Applicable						
TD - Thickness (mm)		Not Applicable						
Node/Junction Thickness (Calipers)								
Thickness (in)		Not Applicable						
Thickness (mm)		Not Applicable						

MD - Machine Direction TD - Transverse/Cross Machine Direction NP - Not Provided

The testing herein is based upon accepted industry practice as well as the test method listed. Test results reported herein do not apply to samples other than those tested.

Table B-16. Geometric measurements for ParaWeb 135

PARAMETER		TEST REPLICATE NUMBER 1	2	3	4	5	MEAN	STD. DEV.
Mass/Unit Area (ASTM D 5261)								
Specimen Width (in)	3.56							
Specimen Length (in)	24							
Mass(g)		220.3	220.4	220.8	220.3	220.7		
Mass/unit length (oz/yd)		11.65	11.65	11.67	11.65	11.67	**11.66**	0.01
Mass/unit length (g/meter)		361	362	362	361	362	**362**	0
Aperature Size (Calipers)								
MD - Aperature Size (in)		Not Applicable						
MD - Aperature Size (mm)		Not Applicable						
TD - Aperature Size (in)		Not Applicable						
TD - Aperature Size (mm)		Not Applicable						
Rib Width (Calipers)								
MD - Width (in)		3.55	3.56	3.55	3.56	3.56	**3.56**	0.01
MD - Width (mm)		90.2	90.4	90.2	90.4	90.4	**90.3**	0.1
TD - Width (in)		Not Applicable						
TD - Width (mm)		Not Applicable						
Rib Thickness (Calipers)								
MD - Thickness (in)		0.174	0.177	0.176	0.173	0.172	**0.174**	0.002
MD - Thickness (mm)		4.42	4.50	4.47	4.39	4.37	**4.43**	0.05
TD - Thickness (in)		Not Applicable						
TD - Thickness (mm)		Not Applicable						
Node/Junction Thickness (Calipers)								
Thickness (in)		Not Applicable						
Thickness (mm)		Not Applicable						

MD - Machine Direction TD - Transverse/Cross Machine Direction NP - Not Provided

The testing herein is based upon accepted industry practice as well as the test method listed. Test results reported herein do not apply to samples other than those tested.

Table B-17. Geometric measurements for ParaLink 300

PARAMETER	TEST REPLICATE NUMBER 1	2	3	4	5	MEAN	STD. DEV.
Mass/Unit Area (ASTM D 5261)							
Specimen Width (in) 6.98							
Specimen Length (in) 24							
Mass(g)	82.71	82.65	82.79	83.03	82.76		
Mass/unit area (oz/sq.yd)	22.55	22.53	22.57	22.64	22.56	**22.57**	0.04
Mass/unit area (g/sq.meter)	764	764	765	767	765	**765**	1
Aperature Size (Calipers)							
MD - Aperature Size (in)	40.9	40.5	40.6	40.8	40.9	**40.7**	0.2
MD - Aperature Size (mm)	1038	1029	1030	1035	1038	**1034**	4
TD - Aperature Size (in)	3.36	3.32	3.54	3.22	3.62	**3.41**	0.16
TD - Aperature Size (mm)	85.3	84.3	89.9	81.8	91.9	**86.7**	4.2
Rib Width (Calipers)							
MD - Width (in)	3.35	3.38	3.34	3.34	3.36	**3.35**	0.02
MD - Width (mm)	85.1	85.9	84.8	84.8	85.3	**85.2**	0.4
TD - Width (in)	2.46	2.46	2.47	2.47	2.47	**2.47**	0.01
TD - Width (mm)	62.48	62.48	62.74	62.74	62.74	**62.64**	0.14
Rib Thickness (Calipers)							
MD - Thickness (in)	0.074	0.073	0.074	0.073	0.073	**0.073**	0.001
MD - Thickness (mm)	1.88	1.85	1.88	1.85	1.85	**1.86**	0.01
TD - Thickness (in)	0.031	0.03	0.03	0.031	0.032	**0.031**	0.001
TD - Thickness (mm)	0.79	0.76	0.76	0.79	0.81	**0.78**	0.02
Node/Junction Thickness (Calipers)							
Thickness (in)	0.105	0.108	0.102	0.104	0.106	**0.105**	0.002
Thickness (mm)	2.67	2.74	2.59	2.64	2.69	**2.67**	0.06

MD - Machine Direction TD - Transverse/Cross Machine Direction NP - Not Provided

The testing herein is based upon accepted industry practice as well as the test method listed. Test results reported herein do not apply to samples other than those tested.

Table B-18. Geometric measurements for ParaLink 400

PARAMETER	TEST REPLICATE NUMBER 1	2	3	4	5	MEAN	STD. DEV.
Mass/Unit Area (ASTM D 5261)							
Specimen Width (in) 14.0							
Specimen Length (in) 39.5							
Mass(g)	342.72	344.83	346.14	345.40	344.17		
Mass/unit area (oz/sq.yd)	28.31	28.48	28.59	28.53	28.43	**28.47**	0.11
Mass/unit area (g/sq.meter)	960	965	969	967	964	**965**	4
Aperature Size (Calipers)							
MD - Aperature Size (in)	37.0	36.9	37.0	37.0	37.0	**37.0**	0.1
MD - Aperature Size (mm)	940	936	939	940	941	**939**	2
TD - Aperature Size (in)	3.47	3.51	3.67	3.68	3.72	**3.61**	0.11
TD - Aperature Size (mm)	88.1	89.2	93.2	93.5	94.5	**91.7**	2.8
Rib Width (Calipers)							
MD - Width (in)	3.44	3.45	3.44	3.45	3.45	**3.45**	0.01
MD - Width (mm)	87.4	87.6	87.4	87.7	87.7	**87.5**	0.1
TD - Width (in)	2.30	2.30	2.31	2.29	2.29	**2.30**	0.01
TD - Width (mm)	58.33	58.36	58.61	58.23	58.15	**58.34**	0.17
Rib Thickness (Calipers)							
MD - Thickness (in)	0.088	0.087	0.088	0.090	0.091	**0.088**	0.002
MD - Thickness (mm)	2.22	2.21	2.22	2.27	2.30	**2.25**	0.04
TD - Thickness (in)	0.037	0.036	0.034	0.036	0.036	**0.036**	0.001
TD - Thickness (mm)	0.93	0.91	0.85	0.91	0.90	**0.90**	0.03
Node/Junction Thickness (Calipers)							
Thickness (in)	0.128	0.132	0.138	0.131	0.132	**0.132**	0.003
Thickness (mm)	3.25	3.34	3.49	3.31	3.34	**3.35**	0.09

MD - Machine Direction TD - Transverse/Cross Machine Direction NP - Not Provided

The testing herein is based upon accepted industry practice as well as the test method listed. Test results reported herein do not apply to samples other than those tested.

Table B-19. Geometric measurements for ParaLink 500

PARAMETER	TEST REPLICATE NUMBER 1	2	3	4	5	MEAN	STD. DEV.
Mass/Unit Area (ASTM D 5261)							
Specimen Width (in) 14.0							
Specimen Length (in) 39.5							
Mass(g)	424.54	427.27	430.18	430.67	433.28		
Mass/unit area (oz/sq.yd)	35.06	35.29	35.53	35.57	35.79	**35.45**	0.28
Mass/unit area (g/sq.meter)	1189	1196	1204	1206	1213	**1202**	9
Aperature Size (Calipers)							
MD - Aperature Size (in)	36.8	36.9	35.8	36.9	35.8	**36.4**	0.6
MD - Aperature Size (mm)	933	936	909	937	908	**925**	15
TD - Aperature Size (in)	3.67	3.33	3.51	3.59	3.51	**3.52**	0.13
TD - Aperature Size (mm)	93.2	84.6	89.2	91.2	89.2	**89.5**	3.2
Rib Width (Calipers)							
MD - Width (in)	3.56	3.58	3.51	3.56		**3.55**	0.03
MD - Width (mm)	90.4	90.8	89.2	90.5		**90.2**	0.7
TD - Width (in)	2.38	2.39	2.42	2.40	2.38	**2.39**	0.01
TD - Width (mm)	60.50	60.77	61.42	60.90	60.52	**60.82**	0.37
Rib Thickness (Calipers)							
MD - Thickness (in)	0.101	0.101	0.103	0.102		**0.101**	0.001
MD - Thickness (mm)	2.55	2.57	2.60	2.58		**2.57**	0.02
TD - Thickness (in)	0.039	0.037	0.029	0.029	0.031	**0.033**	0.005
TD - Thickness (mm)	0.99	0.93	0.72	0.74	0.79	**0.83**	0.12
Node/Junction Thickness (Calipers)							
Thickness (in)	0.165	0.151	0.059	0.160	0.151	**0.137**	0.044
Thickness (mm)	4.19	3.84	1.50	4.06	3.84	**3.48**	1.12

MD - Machine Direction TD - Transverse/Cross Machine Direction NP - Not Provided

The testing herein is based upon accepted industry practice as well as the test method listed. Test results reported herein do not apply to samples other than those tested.

Table B-20. Geometric measurements for ParaLink 600

PARAMETER	TEST REPLICATE NUMBER 1	2	3	4	5	MEAN	STD. DEV.
Mass/Unit Area (ASTM D 5261)							
Specimen Width (in) 14.2							
Specimen Length (in) 39.3							
Mass(g)	523.63	525.33	522.20	520.11	526.45		
Mass/unit area (oz/sq.yd)	42.91	43.05	42.79	42.62	43.14	**42.90**	0.21
Mass/unit area (g/sq.meter)	1455	1459	1451	1445	1463	**1454**	7
Aperature Size (Calipers)							
MD - Aperature Size (in)	36.5	36.5	37.0	37.0	36.9	**36.8**	0.3
MD - Aperature Size (mm)	927	926	939	939	937	**934**	7
TD - Aperature Size (in)	3.56	3.40	3.43	3.48	3.61	**3.49**	0.09
TD - Aperature Size (mm)	90.4	86.2	87.0	88.3	91.7	**88.7**	2.3
Rib Width (Calipers)							
MD - Width (in)	3.58	3.58	3.58	3.58	3.57	**3.58**	0.00
MD - Width (mm)	90.8	90.9	90.8	90.9	90.7	**90.8**	0.1
TD - Width (in)	2.33	2.34	2.30	2.28	2.29	**2.31**	0.03
TD - Width (mm)	59.27	59.50	58.47	57.96	58.17	**58.67**	0.68
Rib Thickness (Calipers)							
MD - Thickness (in)	0.122	0.123	0.132	0.121	0.123	**0.124**	0.004
MD - Thickness (mm)	3.09	3.12	3.34	3.06	3.11	**3.14**	0.11
TD - Thickness (in)	0.035	0.036	0.036	0.034	0.034	**0.035**	0.001
TD - Thickness (mm)	0.89	0.90	0.91	0.85	0.86	**0.88**	0.03
Node/Junction Thickness (Calipers)							
Thickness (in)	0.166	0.163	0.170	0.162	0.158	**0.164**	0.005
Thickness (mm)	4.20	4.13	4.32	4.11	4.00	**4.15**	0.12

MD - Machine Direction TD - Transverse/Cross Machine Direction NP - Not Provided

The testing herein is based upon accepted industry practice as well as the test method listed. Test results reported herein do not apply to samples other than those tested.

Table B-21. Geometric measurements for ParaLink 700

PARAMETER	TEST REPLICATE NUMBER 1	2	3	4	5	MEAN	STD. DEV.
Mass/Unit Area (ASTM D 5261)							
Specimen Width (in) 14.0							
Specimen Length (in) 39.5							
Mass(g)	598.90	609.77	594.81	604.72	608.41		
Mass/unit area (oz/sq.yd)	49.47	50.36	49.13	49.95	50.25	**49.83**	0.52
Mass/unit area (g/sq.meter)	1677	1707	1665	1693	1703	**1689**	18
Aperature Size (Calipers)							
MD - Aperature Size (in)	36.0	37.2	37.2	36.1	36.2	**36.5**	0.6
MD - Aperature Size (mm)	913	944	945	916	918	**928**	16
TD - Aperature Size (in)	3.36	3.50	3.46	3.39	3.39	**3.42**	0.06
TD - Aperature Size (mm)	85.3	88.9	87.9	86.1	86.1	**86.9**	1.5
Rib Width (Calipers)							
MD - Width (in)	3.60	3.61	3.59	3.60	3.62	**3.60**	0.01
MD - Width (mm)	91.5	91.6	91.3	91.6	91.9	**91.6**	0.2
TD - Width (in)	2.30	2.32	2.30	2.32	2.33	**2.31**	0.01
TD - Width (mm)	58.41	58.94	58.47	58.98	59.11	**58.78**	0.32
Rib Thickness (Calipers)							
MD - Thickness (in)	0.144	0.140	0.150	0.144	0.146	**0.145**	0.004
MD - Thickness (mm)	3.66	3.54	3.81	3.64	3.71	**3.67**	0.10
TD - Thickness (in)	0.036	0.035	0.038	0.035	0.040	**0.037**	0.002
TD - Thickness (mm)	0.91	0.88	0.97	0.88	1.02	**0.93**	0.06
Node/Junction Thickness (Calipers)							
Thickness (in)	0.185	0.184	0.188	0.180	0.191	**0.185**	0.004
Thickness (mm)	4.70	4.66	4.78	4.56	4.85	**4.71**	0.11

MD - Machine Direction TD - Transverse/Cross Machine Direction NP - Not Provided

The testing herein is based upon accepted industry practice as well as the test method listed. Test results reported herein do not apply to samples other than those tested.

Table B-22. Geometric measurements for ParaLink 800

PARAMETER	TEST REPLICATE NUMBER 1	2	3	4	5	MEAN	STD. DEV.
Mass/Unit Area (ASTM D 5261)							
Specimen Width (in) 11.8							
Specimen Length (in) 39.5							
Mass(g)	588.36	588.69	587.54	591.32	590.31		
Mass/unit area (oz/sq.yd)	57.90	57.93	57.82	58.19	58.09	**57.99**	0.15
Mass/unit area (g/sq.meter)	1963	1964	1960	1973	1969	**1966**	5
Aperature Size (Calipers)							
MD - Aperature Size (in)	36.8	36.0	36.8	36.0	36.7	**36.5**	0.4
MD - Aperature Size (mm)	935	915	933	913	932	**926**	11
TD - Aperature Size (in)	2.24	2.32	2.20	2.30	2.26	**2.26**	0.05
TD - Aperature Size (mm)	56.9	58.9	55.9	58.4	57.4	**57.5**	1.2
Rib Width (Calipers)							
MD - Width (in)	3.57	3.57	3.55	3.56	3.58	**3.57**	0.01
MD - Width (mm)	90.8	90.6	90.1	90.4	90.8	**90.6**	0.3
TD - Width (in)	2.31	2.33	2.33	2.33	2.27	**2.31**	0.03
TD - Width (mm)	58.69	59.30	59.14	59.26	57.54	**58.79**	0.74
Rib Thickness (Calipers)							
MD - Thickness (in)	0.140	0.142	0.150	0.138	0.134	**0.141**	0.006
MD - Thickness (mm)	3.56	3.59	3.80	3.51	3.40	**3.57**	0.15
TD - Thickness (in)	0.035	0.033	0.035	0.035	0.034	**0.034**	0.001
TD - Thickness (mm)	0.89	0.83	0.89	0.89	0.85	**0.87**	0.03
Node/Junction Thickness (Calipers)							
Thickness (in)	0.189	0.181	0.177	0.179	0.189	**0.183**	0.005
Thickness (mm)	4.79	4.58	4.50	4.54	4.79	**4.64**	0.14

MD - Machine Direction TD - Transverse/Cross Machine Direction NP - Not Provided

The testing herein is based upon accepted industry practice as well as the test method listed. Test results reported herein do not apply to samples other than those tested.

Table B-23. Geometric measurements for ParaLink 1000

PARAMETER	TEST REPLICATE NUMBER 1	2	3	4	5	MEAN	STD. DEV.
Mass/Unit Area (ASTM D 5261)							
Specimen Width (in) 4.78							
Specimen Length (in) 24							
Mass(g)	187.3	192.1	187.6	191.9	188.2		
Mass/unit area (oz/sq.yd)	74.55	76.47	74.67	76.38	74.94	**75.40**	0.94
Mass/unit area (g/sq.meter)	2527	2592	2531	2589	2540	**2556**	32
Aperature Size (Calipers)							
MD - Aperature Size (in)	36.8	36.8	36.7	36.8	36.8	**36.7**	0.0
MD - Aperature Size (mm)	933	933	932	933	933	**933**	1
TD - Aperature Size (in)	1.29	1.28	1.26	1.29	1.26	**1.27**	0.01
TD - Aperature Size (mm)	32.7	32.5	31.9	32.7	32.1	**32.4**	0.4
Rib Width (Calipers)							
MD - Width (in)	3.56	3.52	3.56	3.53	3.54	**3.54**	0.02
MD - Width (mm)	90.4	89.4	90.4	89.7	89.9	**90.0**	0.5
TD - Width (in)	2.37	2.34	2.33	2.33	2.32	**2.34**	0.02
TD - Width (mm)	60.20	59.44	59.18	59.18	58.93	**59.39**	0.49
Rib Thickness (Calipers)							
MD - Thickness (in)	0.151	0.153	0.153	0.151	0.155	**0.153**	0.002
MD - Thickness (mm)	3.84	3.89	3.89	3.84	3.94	**3.88**	0.04
TD - Thickness (in)	0.041	0.034	0.035	0.037	0.034	**0.036**	0.003
TD - Thickness (mm)	1.04	0.86	0.89	0.94	0.86	**0.92**	0.07
Node/Junction Thickness (Calipers)							
Thickness (in)	0.196	0.195	0.194	0.200	0.197	**0.196**	0.002
Thickness (mm)	4.97	4.95	4.91	5.07	4.99	**4.98**	0.06

MD - Machine Direction TD - Transverse/Cross Machine Direction NP - Not Provided

The testing herein is based upon accepted industry practice as well as the test method listed. Test results reported herein do not apply to samples other than those tested.

Table B-24. Geometric measurements for ParaLink 1200

PARAMETER	TEST REPLICATE NUMBER 1	2	3	4	5	MEAN	STD. DEV.
Mass/Unit Area (ASTM D 5261)							
Specimen Width (in) 7.8							
Specimen Length (in) 39.5							
Mass(g)	587.39	587.09	585.79	587.58	584.89		
Mass/unit area (oz/sq.yd)	87.64	87.59	87.40	87.67	87.27	**87.51**	0.17
Mass/unit area (g/sq.meter)	2971	2969	2963	2972	2958	**2967**	6
Aperature Size (Calipers)							
MD - Aperature Size (in)	36.4	36.4	36.3	36.4	37.3	**36.6**	0.4
MD - Aperature Size (mm)	925	925	923	925	947	**929**	10
TD - Aperature Size (in)	0.37	0.46	0.40	0.36	0.36	**0.39**	0.04
TD - Aperature Size (mm)	9.4	11.7	10.1	9.1	9.1	**9.9**	1.1
Rib Width (Calipers)							
MD - Width (in)	3.56	3.56	3.56	3.56	3.57	**3.56**	0.00
MD - Width (mm)	90.5	90.4	90.4	90.5	90.6	**90.5**	0.1
TD - Width (in)	2.32	2.31	2.32	2.30	2.33	**2.31**	0.01
TD - Width (mm)	58.81	58.66	58.80	58.45	59.06	**58.76**	0.22
Rib Thickness (Calipers)							
MD - Thickness (in)	0.139	0.141	0.138	0.136	0.142	**0.139**	0.002
MD - Thickness (mm)	3.53	3.58	3.51	3.45	3.59	**3.53**	0.06
TD - Thickness (in)	0.033	0.034	0.035	0.035	0.034	**0.034**	0.001
TD - Thickness (mm)	0.83	0.85	0.89	0.88	0.86	**0.86**	0.02
Node/Junction Thickness (Calipers)							
Thickness (in)	0.177	0.175	0.173	0.179	0.174	**0.175**	0.003
Thickness (mm)	4.50	4.43	4.38	4.55	4.42	**4.46**	0.07

MD - Machine Direction TD - Transverse/Cross Machine Direction NP - Not Provided

The testing herein is based upon accepted industry practice as well as the test method listed. Test results reported herein do not apply to samples other than those tested.

Table B-25. Geometric measurements for ParaLink 1500

PARAMETER	TEST REPLICATE NUMBER 1	2	3	4	5	MEAN	STD. DEV.
Mass/Unit Area (ASTM D 5261)							
Specimen Width (in) 7.8							
Specimen Length (in) 39.5							
Mass(g)	737.60	734.56	741.27	727.76	719.92		
Mass/unit area (oz/sq.yd)	110.05	109.60	110.60	108.58	107.41	**109.25**	1.26
Mass/unit area (g/sq.meter)	3731	3715	3749	3681	3641	**3704**	43
Aperature Size (Calipers)							
MD - Aperature Size (in)	37.3	37.3	36.1	36.0	37.1	**36.7**	0.6
MD - Aperature Size (mm)	946	947	916	915	943	**933**	16
TD - Aperature Size (in)	0.31	0.34	0.28	0.36	0.28	**0.31**	0.04
TD - Aperature Size (mm)	7.9	8.6	7.1	9.1	7.1	**8.0**	0.9
Rib Width (Calipers)							
MD - Width (in)	3.64	3.62	3.62	3.63	3.63	**3.63**	0.01
MD - Width (mm)	92.5	92.0	91.9	92.2	92.2	**92.2**	0.2
TD - Width (in)	2.28	2.30	2.29	2.32	2.29	**2.30**	0.01
TD - Width (mm)	58.03	58.33	58.18	58.81	58.18	**58.31**	0.30
Rib Thickness (Calipers)							
MD - Thickness (in)	0.169	0.175	0.163	0.167	0.157	**0.166**	0.007
MD - Thickness (mm)	4.28	4.45	4.14	4.23	3.99	**4.22**	0.17
TD - Thickness (in)	0.031	0.033	0.031	0.033	0.035	**0.032**	0.002
TD - Thickness (mm)	0.79	0.83	0.79	0.83	0.89	**0.82**	0.04
Node/Junction Thickness (Calipers)							
Thickness (in)	0.210	0.206	0.210	0.211	0.193	**0.206**	0.007
Thickness (mm)	5.32	5.22	5.32	5.35	4.90	**5.22**	0.19

MD - Machine Direction TD - Transverse/Cross Machine Direction NP - Not Provided

The testing herein is based upon accepted industry practice as well as the test method listed. Test results reported herein do not apply to samples other than those tested.

B.2 Product Production Information

Table B-26. Typical coil dimensions for the ParaWeb product line.

Style/Type	Width (ft)	Length (ft)	Area (yd^2)	Coil Diameter (ft)	Gross weight (lbs)
ParaWeb 2S 30	0.28	328	11.11	1.79	32.63
ParaWeb 2D 30	0.27	328	10.84	1.58	28.00
ParaWeb 2E 30	0.27	328	10.84	1.47	19.18
ParaWeb 2S 40	0.28	328	11.11	1.88	40.79
ParaWeb 2D 40	0.28	328	10.97	1.79	36.82
ParaWeb 2E 40	0.27	328	10.84	1.58	24.03
ParaWeb 2S 50	0.30	328	11.76	2.22	50.71
ParaWeb 2D 50	0.30	328	11.76	1.88	42.99
ParaWeb 2E 50	0.29	328	11.37	1.69	27.34
ParaWeb 2S 75	0.30	328	11.76	2.37	66.14
ParaWeb 2D 75	0.30	328	11.76	2.06	56.44
ParaWeb 2E 75	0.30	328	11.76	1.88	39.46
ParaWeb 2S 100	0.30	328	11.76	2.90	83.11
ParaWeb 2D 100	0.30	328	11.76	2.30	68.56
ParaWeb 2E 100	0.30	328	11.76	2.06	53.13
ParaWeb 2S 135					
ParaWeb 2D 135					
ParaWeb 2E 135					
ParaWeb MS 45	0.16	328	6.53	2.22	32.19
ParaWeb MD 45	0.16	328	6.53	2.14	29.32
ParaWeb ME 45	0.16	328	11.11	1.97	22.49
ParaWeb MS 54	0.21	328	10.84	2.22	43.87
ParaWeb MD 54	0.21	328	10.84	2.14	39.46
ParaWeb ME 54	0.21	328	11.11	1.88	29.10
ParaWeb MS 63	0.21	328	10.97	2.30	51.37
ParaWeb MD 63	0.21	328	10.84	2.30	46.30
ParaWeb ME 63	0.21	328	11.76	1.97	33.07

(Conversions: 1 ft = 0.3048 m; 1 yd^2 = 0.836 m^2)

Table B-27. Typical geogrid roll dimensions for the ParaLink product line.

Style/Type	Width (ft)	Length (ft)	Area (yd^2)	Roll Diameter (ft)	Gross weight (lbs)
ParaLink 300	14.8	656	1079	2.30	1808
ParaLink 400	14.8	492	809	2.46	1698
ParaLink 500	14.8	427	702	2.46	1808
ParaLink 600	14.8	328	539	2.30	1698
ParaLink 700	14.8	164	270	1.64	1036
ParaLink 800	14.8	164	270	1.64	1168
ParaLink 1000	14.8	164	270	1.64	1433
ParaLink 1200	14.8	164	270	1.64	1676
ParaLink 1500	14.8	164	270	1.64	2205

(Conversions: 1 ft = 0.3048 m; 1 yd^2 = 0.836 m^2)

B.3 Product Manufacturing Quality Control Program

Testing/sampling is done per the Linear Composites Quality Control Plan Document. A summary of the program is provided in Table B-10.

Table B-28. Typical summary of quality control testing conducted by the manufacturer for the ParaWeb/ParaLink product line.

Test Method	Property	Testing Frequency
ASTM D 5261	Mass / Unit Area	N/A
ASTM D6637	Single Rib Tensile	Twice every 8 hours during production run.
ASTM D6637	Multi-Rib Tensile	One test per run or weekly if period of run exceeds a week.
Hand measure	Aperture Size	N/A
Hand measure	Width	Once per hour during production run.
GRI-GG2	Junction Strength	N/A
GRI-GG7	CEG	Tested when polyester suppliers are changed.
GRI-GG8	MW	Tested by polyester supplier.

Table B-29. Typical production lot size for the ParaWeb product line.

Style/Type	Lot Size (yd^2)	# of rolls per Lot
ParaWeb 2S 30	6066	500
ParaWeb 2D 30	5923	500
ParaWeb 2E 30	5923	500
ParaWeb 2S 40	6066	500
ParaWeb 2D 40	5994	500
ParaWeb 2E 40	5923	500
ParaWeb 2S 50	6422	500
ParaWeb 2D 50	6422	500
ParaWeb 2E 50	6208	500
ParaWeb 2S 75	6422	500
ParaWeb 2D 75	6422	500
ParaWeb 2E 75	6422	500
ParaWeb 2S 100	6422	500
ParaWeb 2D 100	6422	500
ParaWeb 2E 100	6422	500
ParaWeb 2S 135		
ParaWeb 2D 135		
ParaWeb 2E 135		
ParaWeb MS 45	3568	500
ParaWeb MD 45	3568	500
ParaWeb ME 45	3568	500
ParaWeb MS 54	4567	500
ParaWeb MD 54	4567	500
ParaWeb ME 54	4496	500
ParaWeb MS 63	4638	500
ParaWeb MD 63	4638	500
ParaWeb ME 63	4567	500

Table B-30. Typical production lot size for the ParaLink product line.

Style/Type	Lot Size (yd^2)	# of rolls per Lot
ParaLink 300	23120	18
ParaLink 400	17340	18
ParaLink 500	15028	18
ParaLink 600	11560	18
ParaLink 700	5780	18
ParaLink 800	5780	18
ParaLink 1000	5780	18
ParaLink 1200	5780	18
ParaLink 1500	5780	18

Appendix C: Tensile Strength Detailed Test Results

Table C-1. Wide width tensile test results for ParaWeb 30.

PARAMETER	TEST REPLICATE NUMBER 1	2	3	4	5	MEAN	STD. DEV.	MARV
Wide Width Tensile Properties (ASTM D 6637, Method B modified for straps)								
MD Maximum Strength (lbs)	7014	7036	6998	7055	7044	**7029**	23	6,744 min
MD Maximum Strength (kN)	31.2	31.3	31.1	31.4	31.3	**31.3**	0.1	30 Min
MD Strength @ 2% Strain (lbs)	1313	1310	1310	1306	1310	**1310**	2	
MD Strength @ 2% Strain (kN)	5.84	5.83	5.83	5.81	5.83	**5.83**	0.01	
MD Strength @ 5% Strain (lbs)	3287	3274	3285	3249	3253	**3270**	18	
MD Strength @ 5% Strain (kN)	14.6	14.6	14.6	14.5	14.5	**14.5**	0.1	
MD Strength @ 10% Strain (lbs)	6698	6686	6700	6687	6720	**6698**	14	
MD Strength @ 10% Strain (kN)	29.8	29.8	29.8	29.8	29.9	**29.8**	0.1	
MD Break Elongation (%)	11.6	11.8	11.4	11.6	11.5	**11.6**	0.1	

MD - Machine Direction TD - Transverse/Cross Machine Direction NP - Not Provided

The testing herein is based upon accepted industry practice as well as the test method listed. Test results reported herein do not apply to samples other than those tested.

Table C-2. Wide width tensile test results for ParaWeb 50.

PARAMETER	TEST REPLICATE NUMBER 1	2	3	4	5	MEAN	STD. DEV.	MARV
Wide Width Tensile Properties (ASTM D 6637, Method B modified for straps)								
MD Maximum Strength (lbs)	11800	11876	11846	11814	11699	**11807**	67	11,240 min
MD Maximum Strength (kN)	52.5	52.8	52.7	52.6	52.1	**52.5**	0.3	50 Min
MD Strength @ 2% Strain (lbs)	2121	2094	2111	2211	2169	**2141**	48	
MD Strength @ 2% Strain (kN)	9.44	9.32	9.39	9.84	9.65	**9.53**	0.21	
MD Strength @ 5% Strain (lbs)	5696	5602	5637	5870	5801	**5721**	112	
MD Strength @ 5% Strain (kN)	25.3	24.9	25.1	26.1	25.8	**25.5**	0.5	
MD Strength @ 10% Strain (lbs)	11627	11532	11563	11616	11604	**11588**	40	
MD Strength @ 10% Strain (kN)	51.7	51.3	51.5	51.7	51.6	**51.6**	0.2	
MD Break Elongation (%)	10.5	11.1	10.9	10.7	10.5	**10.7**	0.3	

MD - Machine Direction TD - Transverse/Cross Machine Direction NP - Not Provided

The testing herein is based upon accepted industry practice as well as the test method listed. Test results reported herein do not apply to samples other than those tested.

Table C-3. Wide width tensile test results for ParaWeb 135.

PARAMETER	TEST REPLICATE NUMBER 1	2	3	4	5	MEAN	STD. DEV.	MARV
Wide Width Tensile Properties (ASTM D 6637, Method B modified for straps)								
MD Maximum Strength (lbs)	35178	35080	35148	35153	35090	**35130**	43	30,349 min
MD Maximum Strength (kN)	157	156	156	156	156	**156**	0	135 Min
MD Strength @ 2% Strain (lbs)	5534	5660	5625	5875	5876	**5714**	154	
MD Strength @ 2% Strain (kN)	24.6	25.2	25.0	26.1	26.1	**25.4**	0.7	
MD Strength @ 5% Strain (lbs)	13286	13342	13148	13966	13840	**13516**	363	
MD Strength @ 5% Strain (kN)	59.1	59.4	58.5	62.1	61.6	**60.1**	1.6	
MD Strength @ 10% Strain (lbs)	32810	32743	32667	33179	32960	**32872**	203	
MD Strength @ 10% Strain (kN)	146	146	145	148	147	**146**	1	
MD Break Elongation (%)	11.7	11.8	11.9	11.6	11.9	**11.8**	0.1	

MD - Machine Direction TD - Transverse/Cross Machine Direction NP - Not Provided

The testing herein is based upon accepted industry practice as well as the test method listed. Test results reported herein do not apply to samples other than those tested.

Table C-4. Wide width tensile test results for ParaLink 300.

PARAMETER	TEST REPLICATE NUMBER 1	2	3	4	5	MEAN	STD. DEV.	MARV
Wide Width Tensile Properties (ASTM D 6637, Method B)								
MD Number of Ribs per Specimen:	1							
MD Number of Ribs per foot:	1.72							
MD Ultimate Strength (lbs)	12450	12405	12241	12080	12402	**12316**	154	
MD Ultimate Strength (lbs/ft)	21397	21320	21038	20762	21315	**21166**	264	20,548 min
MD Ultimate Strength (kN/m)	312	311	307	303	311	**309**	4	300 min
MD Strength @ 2% Strain (lbs)	1744	1957	1868	2014	1756	**1868**	120	
MD Strength @ 2% Strain (lbs/ft)	2997	3363	3210	3461	3018	**3210**	205	
MD Strength @ 2% Strain (kN/m)	43.8	49.1	46.9	50.5	44.1	**46.9**	3.0	
MD Strength @ 5% Strain (lbs)	3633	4794	4283	4851	4176	**4347**	499	
MD Strength @ 5% Strain (lbs/ft)	6244	8239	7361	8337	7177	**7472**	858	
MD Strength @ 5% Strain (kN/m)	91.2	120	107	122	105	**109**	13	
MD Strength @ 10% Strain (lbs)	11161	12008	12010		11743	**11731**	400	
MD Strength @ 10% Strain (lbs/ft)	19182	20638	20641		20182	**20161**	687	
MD Strength @ 10% Strain (kN/m)	280.1	301.3	301.4		294.7	**294.3**	10.0	
MD Break Elongation (%)	12.1	10.9	10.3	9.68	11.3	**10.8**	0.9	

MD - Machine Direction TD - Transverse/Cross Machine Direction NP - Not Provided

The testing herein is based upon accepted industry practice as well as the test method listed. Test results reported herein do not apply to samples other than those tested.

Table C-5. Wide width tensile test results for ParaLink 1000.

PARAMETER	TEST REPLICATE NUMBER 1	2	3	4	5	MEAN	STD. DEV.	MARV
Wide Width Tensile Properties (ASTM D 6637, Method B)								
MD Number of Ribs per Specimen:	1							
MD Number of Ribs per foot:	2.51							
MD Ultimate Strength (lbs)	28980	29106	29218	29143	29391	**29168**	152	
MD Ultimate Strength (lbs/ft)	72753	73069	73351	73162	73785	**73224**	381	68,493 min
MD Ultimate Strength (kN/m)	1062	1067	1071	1068	1077	**1069**	6	1000 min
MD Strength @ 2% Strain (lbs)	3811	3886	3930	3140	3186	**3591**	393	
MD Strength @ 2% Strain (lbs/ft)	9567	9756	9866	7883	7998	**9014**	987	
MD Strength @ 2% Strain (kN/m)	140	142	144	115	117	**132**	14	
MD Strength @ 5% Strain (lbs)	10077	10161	10358	9356	9103	**9811**	548	
MD Strength @ 5% Strain (lbs/ft)	25298	25509	26003	23488	22853	**24630**	1375	
MD Strength @ 5% Strain (kN/m)	369	372	380	343	334	**360**	20	
MD Strength @ 10% Strain (lbs)	26393	25878	26368	26064	25283	**25997**	454	
MD Strength @ 10% Strain (lbs/ft)	66259	64966	66196	65433	63472	**65265**	1139	
MD Strength @ 10% Strain (kN/m)	967	948	966	955	927	**953**	17	
MD Break Elongation (%)	11.9	12.6	12.5	12.2	12.7	**12.4**	0.3	

MD - Machine Direction TD - Transverse/Cross Machine Direction NP - Not Provided

The testing herein is based upon accepted industry practice as well as the test method listed. Test results reported herein do not apply to samples other than those tested.

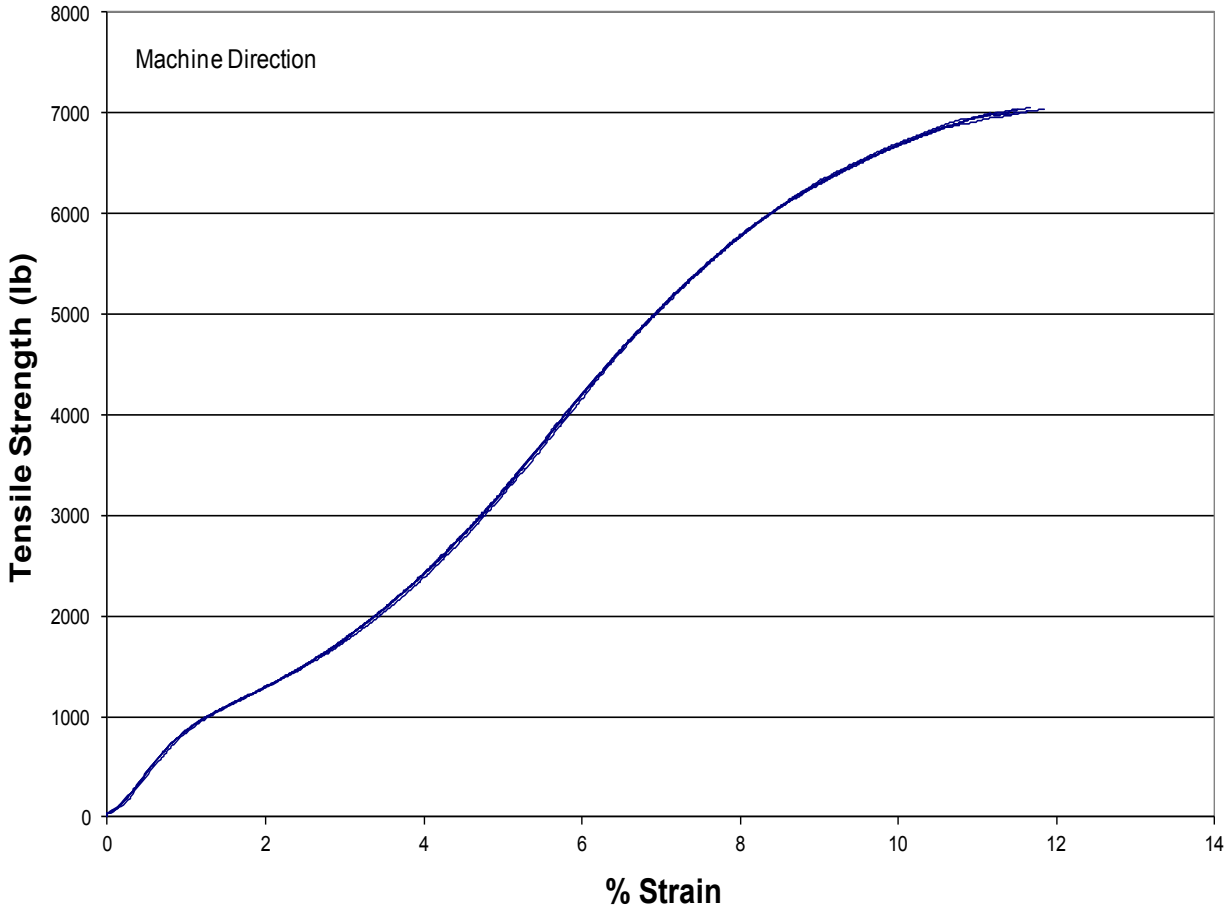

Figure C-1. Wide width tensile test load-strain curve for ParaWeb 30

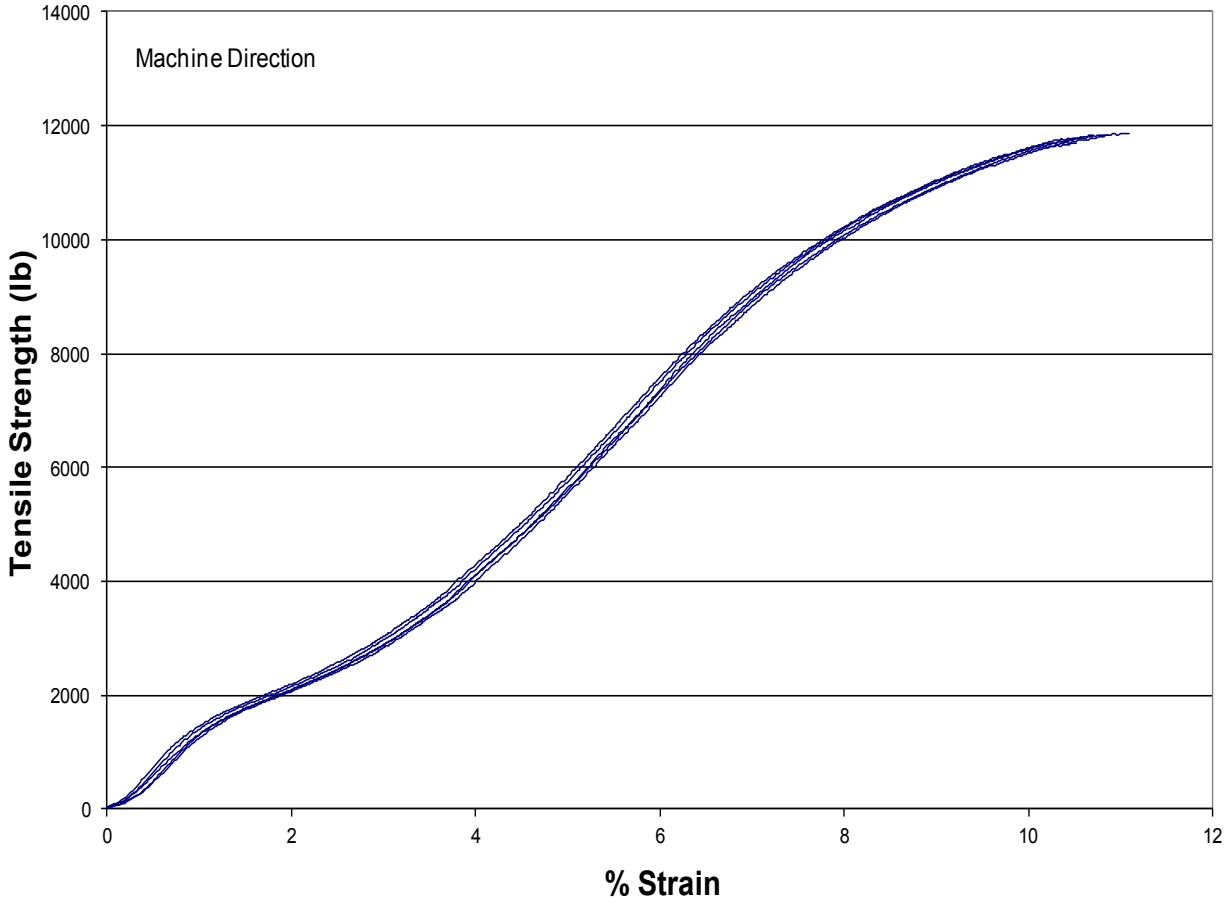

Figure C-2. Wide width tensile test load-strain curve for ParaWeb 50

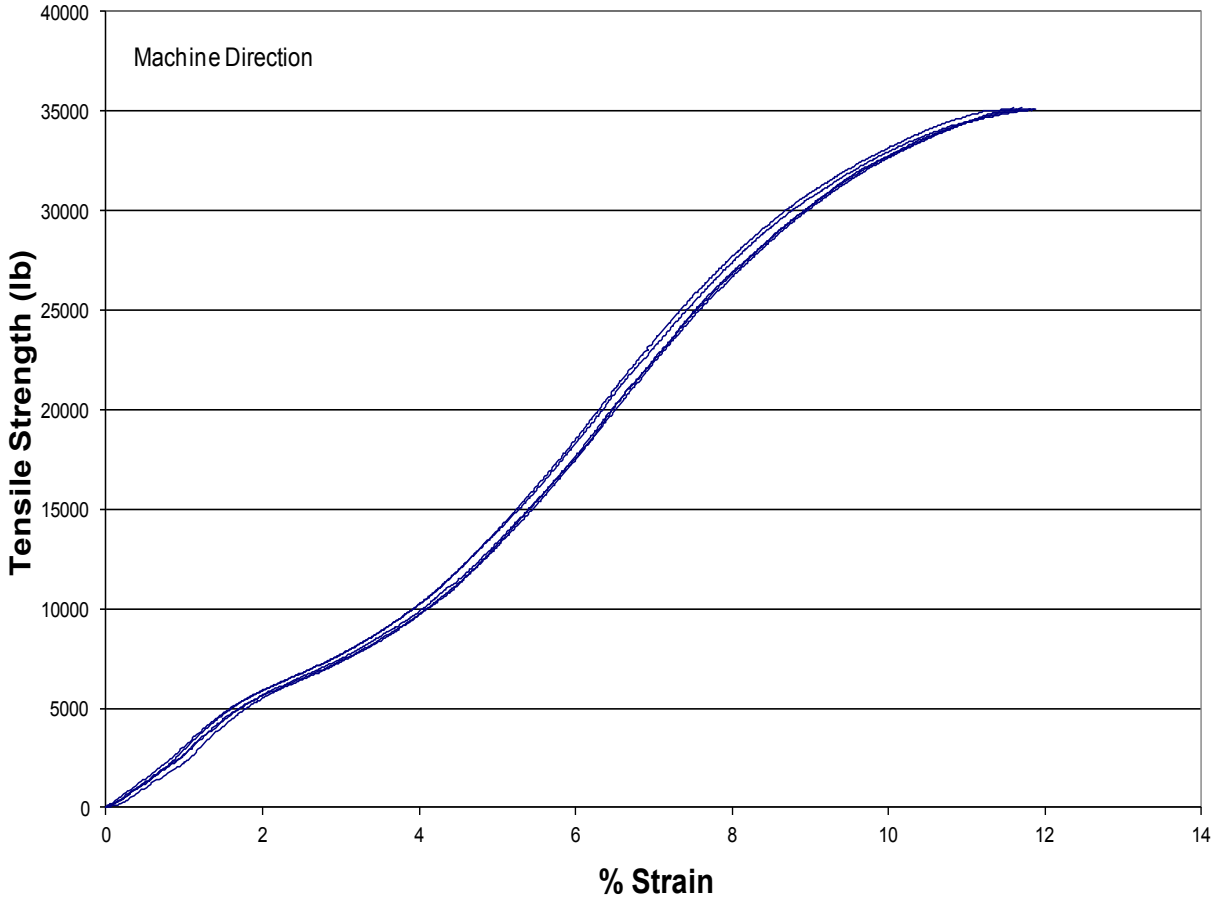

Figure C-3. Wide width tensile test load-strain curve for ParaWeb 135

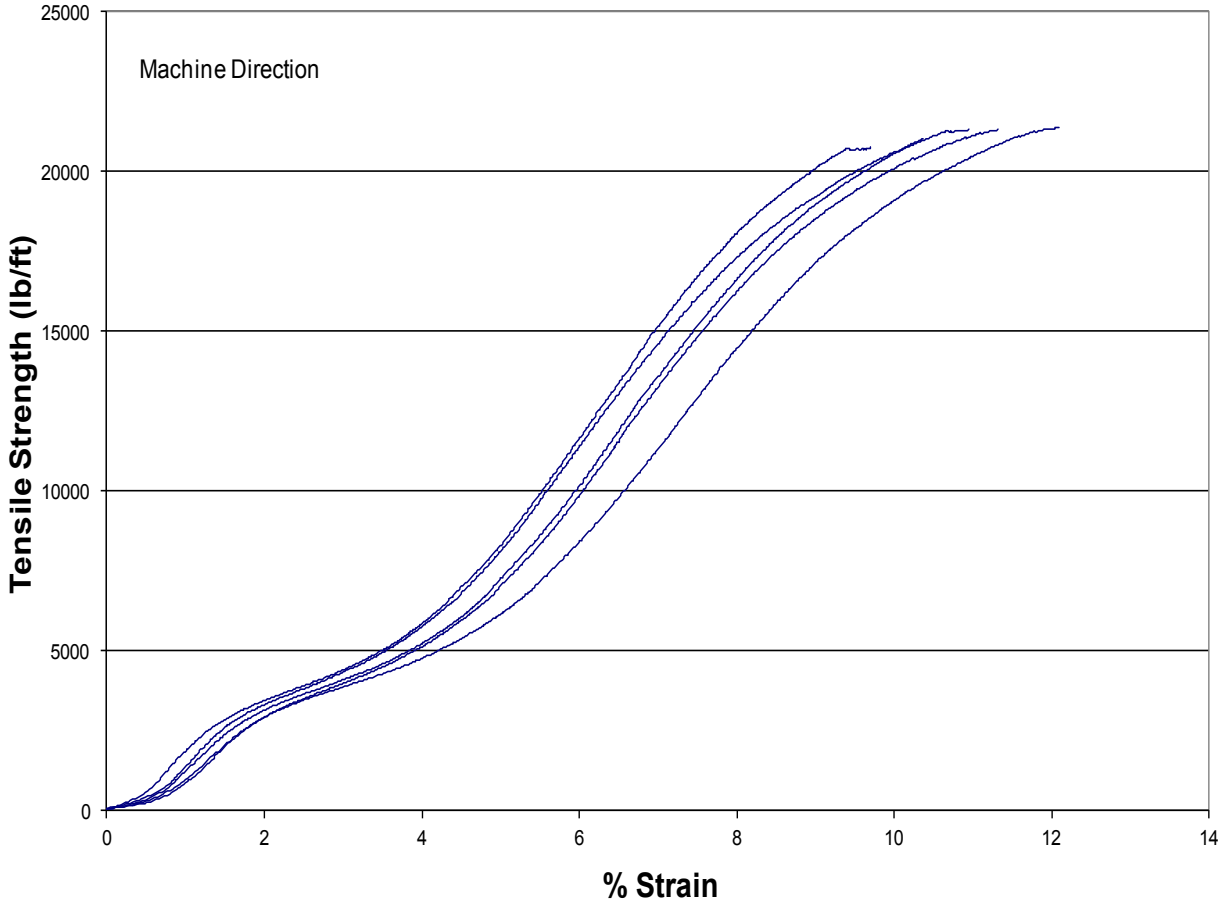

Figure C-4. Wide width tensile test load-strain curve for ParaLink 300

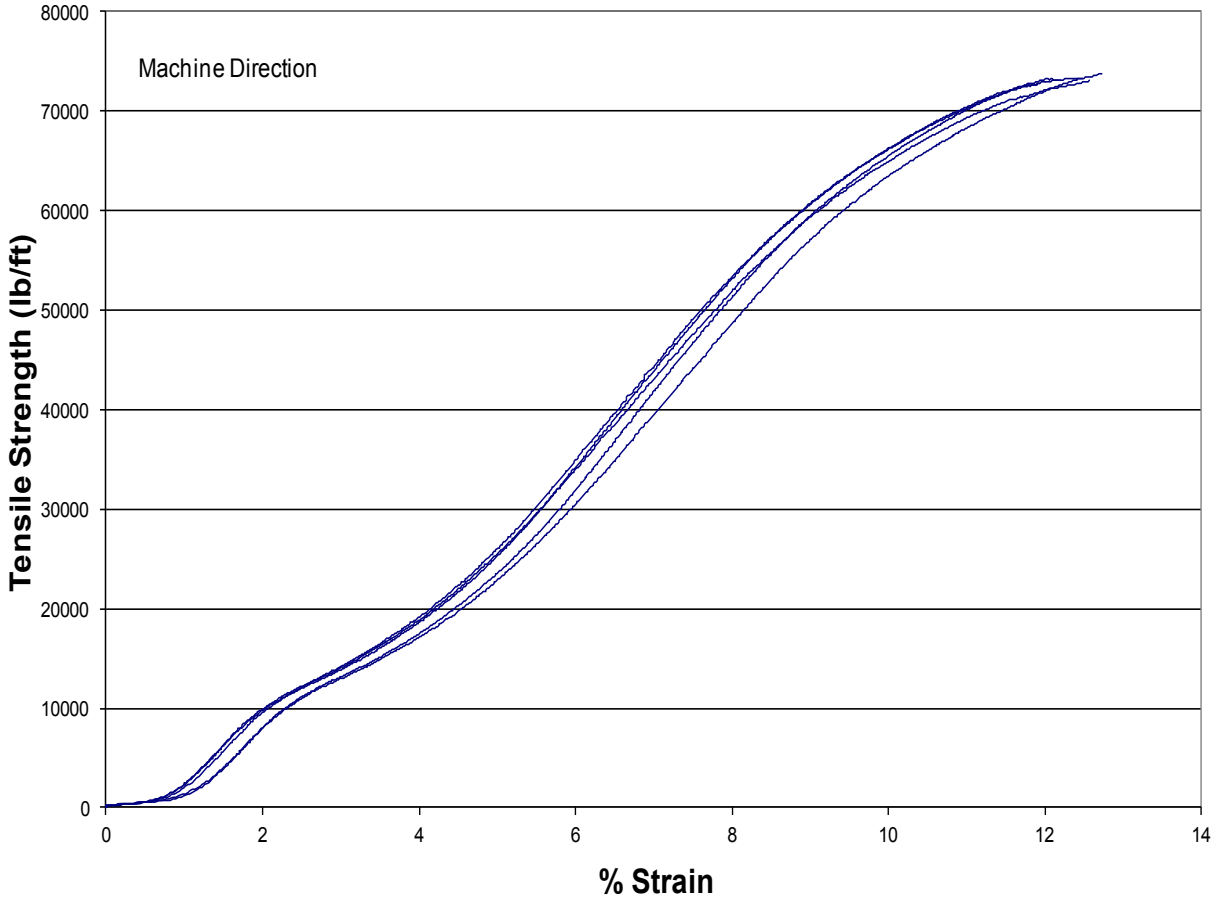

Figure C-5. Wide width tensile test load-strain curve for ParaLink 1000

Appendix D: Installation Damage Detailed Test Results

Table D-1. Installation damage wide width tensile test results for ParaWeb 30, soil gradation 1.
Installation damage testing (ASTM D 5818, as modified in AASHTO R69-15).
Wide wide tensile testing (ASTM D 6637, Method B, moddified for straps).

Machine Direction

Sample Identification	Specimen Number	Maximum Load (lbs)	Maximum Load (kN)	Elongation @ Break (%)	Load @ 2% (lbs)	Load @ 2% (kN)	Load @ 5% (lbs)	Load @ 5% (kN)	Load @ 10% (lbs)	Load @ 10% (kN)
ParaWeb 30 Baseline	1	7014	31.2	11.6	1313	5.84	3287	14.6	6698	29.8
	2	7036	31.3	11.8	1310	5.83	3274	14.6	6686	29.8
	3	6998	31.1	11.4	1310	5.83	3285	14.6	6700	29.8
	4	7055	31.4	11.6	1306	5.81	3249	14.5	6687	29.8
	5	7044	31.3	11.5	1310	5.83	3253	14.5	6720	29.9
Average		7029	31.3	11.6	1310	5.83	3270	14.5	6698	29.8
Standard Deviation		20.7	0.1	0.1	2.2	0.01	15.9	0.1	12.3	0.1
% COV		0.3	0.3	1.1	0.2	0.17	0.5	0.5	0.2	0.2

Machine Direction

Sample Identification	Specimen Number	Maximum Load (lbs)	Maximum Load (kN)	Elongation @ Break (%)	Load @ 2% (lbs)	Load @ 2% (kN)	Load @ 5% (lbs)	Load @ 5% (kN)	Load @ 10% (lbs)	Load @ 10% (kN)
ParaWeb 30 installed in Gradation 1 (Coarse Gravel)	1	5053	22.5	9.22	1146	5.10	2531	11.3		
	2	4906	21.8	8.80	1154	5.13	2529	11.3		
	3	5100	22.7	8.09	1245	5.54	3015	13.4		
	4	3618	16.1	9.36	738	3.28	1769	7.9		
	5	3968	17.7	7.71	1045	4.65	2461	10.9		
	6	4998	22.2	8.88	1170	5.21	2670	11.9		
	7	4696	20.9	8.52	1175	5.23	2594	11.5		
	8	5288	23.5	8.48	1239	5.51	2895	12.9		
	9	4927	21.9	8.67	1217	5.42	2780	12.4		
	10	5699	25.4	9.35	1240	5.52	2828	12.6		
Average		4825	21.5	8.71	1137	5.06	2607	11.6		
Standard Deviation		579.6	2.6	0.51	144.8	0.64	326.8	1.5		
% COV		12.0	12.0	5.9	12.7	12.74	12.5	12.5		

Percent Retained		68.6	68.6	75.2	86.8	86.8	79.7	79.7		
RFid		**1.46**	**1.46**							

The testing herein is based upon accepted industry practice as well as the test method listed. Test results reported herein do not apply to samples other than those tested.

Table D-2. Installation damage wide width tensile test results for ParaWeb 30, soil gradation 2.
Installation damage testing (ASTM D 5818, as modified in AASHTO R69-15).
Wide wide tensile testing (ASTM D 6637, Method B, moddified for straps).

Machine Direction

Sample Identification	Specimen Number	Maximum Load (lbs)	Maximum Load (kN)	Elongation @ Break (%)	Load @ 2% (lbs)	Load @ 2% (kN)	Load @ 5% (lbs)	Load @ 5% (kN)	Load @ 10% (lbs)	Load @ 10% (kN)
ParaWeb 30 Baseline	1	7014	31.2	11.6	1313	5.84	3287	14.6	6698	29.8
	2	7036	31.3	11.8	1310	5.83	3274	14.6	6686	29.8
	3	6998	31.1	11.4	1310	5.83	3285	14.6	6700	29.8
	4	7055	31.4	11.6	1306	5.81	3249	14.5	6687	29.8
	5	7044	31.3	11.5	1310	5.83	3253	14.5	6720	29.9
Average		7029	31.3	11.6	1310	5.83	3270	14.5	6698	29.8
Standard Deviation		20.7	0.1	0.1	2.2	0.01	15.9	0.1	12.3	0.1
% COV		0.3	0.3	1.1	0.2	0.17	0.5	0.5	0.2	0.2

Machine Direction

Sample Identification	Specimen Number	Maximum Load (lbs)	Maximum Load (kN)	Elongation @ Break (%)	Load @ 2% (lbs)	Load @ 2% (kN)	Load @ 5% (lbs)	Load @ 5% (kN)	Load @ 10% (lbs)	Load @ 10% (kN)
ParaWeb 30 installed in Gradation 2 (Sandy Gravel)	1	6975	31.0	12.5	1180	5.25	2352	10.5	6198	27.6
	2	6706	29.8	11.8	1191	5.30	2464	11.0	6213	27.6
	3	7022	31.2	12.4	1221	5.43	2620	11.7	6381	28.4
	4	7027	31.3	12.1	1231	5.48	2681	11.9	6420	28.6
	5	6927	30.8	11.8	1232	5.48	2728	12.1	6460	28.7
	6	7078	31.5	12.0	1251	5.57	2841	12.6	6542	29.1
	7	6965	31.0	11.8	1233	5.49	2809	12.5	6527	29.0
	8	6538	29.1	11.9	1124	5.00	2462	11.0	6203	27.6
	9	6832	30.4	11.8	1200	5.34	2726	12.1	6454	28.7
	10	6951	30.9	11.6	1229	5.47	2824	12.6	6522	29.0
Average		6902	30.7	12.0	1209	5.38	2651	11.8	6392	28.4
Standard Deviation		157.8	0.7	0.3	35.2	0.16	162.6	0.7	131.3	0.6
% COV		2.3	2.3	2.4	2.9	2.91	6.1	6.1	2.1	2.1

Percent Retained		98.2	98.2	103.3	92.3	92.3	81.1	81.1	95.4	95.4
RFid		**1.02**	**1.02**							

The testing herein is based upon accepted industry practice as well as the test method listed. Test results reported herein do not apply to samples other than those tested.

Table D-3. Installation damage wide width tensile test results for ParaWeb 30, soil gradation 3.
Installation damage testing (ASTM D 5818, as modified in AASHTO R69-15).
Wide wide tensile testing (ASTM D 6637, Method B, moddified for straps).

Machine Direction

Sample Identification	Specimen Number	Maximum Load (lbs)	Maximum Load (kN)	Elongation @ Break (%)	Load @ 2% (lbs)	Load @ 2% (kN)	Load @ 5% (lbs)	Load @ 5% (kN)	Load @ 10% (lbs)	Load @ 10% (kN)
ParaWeb 30 Baseline	1	7014	31.2	11.6	1313	5.84	3287	14.6	6698	29.8
	2	7036	31.3	11.8	1310	5.83	3274	14.6	6686	29.8
	3	6998	31.1	11.4	1310	5.83	3285	14.6	6700	29.8
	4	7055	31.4	11.6	1306	5.81	3249	14.5	6687	29.8
	5	7044	31.3	11.5	1310	5.83	3253	14.5	6720	29.9
Average		7029	31.3	11.6	1310	5.83	3270	14.5	6698	29.8
Standard Deviation		20.7	0.1	0.1	2.2	0.01	15.9	0.1	12.3	0.1
% COV		0.3	0.3	1.1	0.2	0.17	0.5	0.5	0.2	0.2

Machine Direction

Sample Identification	Specimen Number	Maximum Load (lbs)	Maximum Load (kN)	Elongation @ Break (%)	Load @ 2% (lbs)	Load @ 2% (kN)	Load @ 5% (lbs)	Load @ 5% (kN)	Load @ 10% (lbs)	Load @ 10% (kN)
ParaWeb 30 installed in Gradation 3 (Sand)	1	6936	30.9	11.9	1270	5.65	2985	13.3	6601	29.4
	2	6993	31.1	11.6	1278	5.69	3031	13.5	6633	29.5
	3	7026	31.3	11.7	1270	5.65	2988	13.3	6603	29.4
	4	7030	31.3	11.6	1267	5.64	3007	13.4	6614	29.4
	5	7016	31.2	11.7	1301	5.79	3114	13.9	6650	29.6
	6	7040	31.3	11.7	1278	5.69	3068	13.7	6631	29.5
	7	7029	31.3	11.6	1293	5.75	3087	13.7	6646	29.6
	8	7019	31.2	11.6	1287	5.73	3067	13.6	6628	29.5
	9	7005	31.2	11.9	1270	5.65	3028	13.5	6609	29.4
	10	7059	31.4	11.8	1266	5.64	3042	13.5	6617	29.4
Average		7015	31.2	11.7	1278	5.69	3042	13.5	6623	29.5
Standard Deviation		31.5	0.1	0.1	11.2	0.05	40.4	0.2	16.3	0.1
% COV		0.4	0.4	1.0	0.9	0.88	1.3	1.3	0.2	0.2

Percent Retained		99.8	99.8	101.1	97.6	97.6	93.0	93.0	98.9	98.9
RFid		**1.00**	**1.00**							

The testing herein is based upon accepted industry practice as well as the test method listed. Test results reported herein do not apply to samples other than those tested.

Table D-4. Installation damage wide width tensile test results for ParaWeb 50, soil gradation 1.
Installation damage testing (ASTM D 5818, as modified in AASHTO R69-15).
Wide wide tensile testing (ASTM D 6637, Method B, moddified for straps).

Machine Direction

Sample Identification	Specimen Number	Maximum Load (lbs)	Maximum Load (kN)	Elongation @ Break (%)	Load @ 2% (lbs)	Load @ 2% (kN)	Load @ 5% (lbs)	Load @ 5% (kN)	Load @ 10% (lbs)	Load @ 10% (kN)
ParaWeb 50 Baseline	1	11800	52.5	10.5	2121	9.44	5696	25.3	11627	51.7
	2	11876	52.8	11.1	2094	9.32	5602	24.9	11532	51.3
	3	11846	52.7	10.9	2111	9.39	5637	25.1	11563	51.5
	4	11814	52.6	10.7	2211	9.84	5870	26.1	11616	51.7
	5	11699	52.1	10.5	2169	9.65	5801	25.8	11604	51.6
Average		11807	52.5	10.7	2141	9.53	5721	25.5	11588	51.6
Standard Deviation		60.1	0.3	0.2	42.9	0.19	100.4	0.4	35.6	0.2
% COV		0.5	0.5	2.2	2.0	2.00	1.8	1.8	0.3	0.3

Machine Direction

Sample Identification	Specimen Number	Maximum Load (lbs)	Maximum Load (kN)	Elongation @ Break (%)	Load @ 2% (lbs)	Load @ 2% (kN)	Load @ 5% (lbs)	Load @ 5% (kN)	Load @ 10% (lbs)	Load @ 10% (kN)
ParaWeb 50 installed in Gradation 1 (Coarse Gravel)	1	10389	46.2	10.0	1993	8.87	4831	21.5		
	2	10513	46.8	9.60	2034	9.05	5057	22.5		
	3	10580	47.1	9.42	2095	9.32	5263	23.4		
	4	10137	45.1	9.19	2078	9.25	5295	23.6		
	5	9910	44.1	8.91	2050	9.12	5195	23.1		
	6	9539	42.4	9.06	2006	8.93	4907	21.8		
	7	8561	38.1	9.08	1995	8.88	5002	22.3		
	8	9088	40.4	9.68	1930	8.59	4655	20.7		
	9	9708	43.2	8.88	2056	9.15	5183	23.1		
	10	10054	44.7	9.02	2075	9.23	5209	23.2		
Average		9848	43.8	9.29	2031	9.04	5060	22.5		
Standard Deviation		612.4	2.7	0.36	47.8	0.21	198.9	0.9		
% COV		6.2	6.2	3.9	2.4	2.35	3.9	3.9		

Percent Retained	83.4	83.4	86.5	94.9	94.9	88.4	88.4		
RFid	**1.20**	**1.20**							

The testing herein is based upon accepted industry practice as well as the test method listed. Test results reported herein do not apply to samples other than those tested.

Table D-5. Installation damage wide width tensile test results for ParaWeb 50, soil gradation 2.
Installation damage testing (ASTM D 5818, as modified in AASHTO R69-15).
Wide wide tensile testing (ASTM D 6637, Method B, moddified for straps).

Machine Direction

Sample Identification	Specimen Number	Maximum Load (lbs)	Maximum Load (kN)	Elongation @ Break (%)	Load @ 2% (lbs)	Load @ 2% (kN)	Load @ 5% (lbs)	Load @ 5% (kN)	Load @ 10% (lbs)	Load @ 10% (kN)
ParaWeb 50 Baseline	1	11800	52.5	10.5	2121	9.44	5696	25.3	11627	51.7
	2	11876	52.8	11.1	2094	9.32	5602	24.9	11532	51.3
	3	11846	52.7	10.9	2111	9.39	5637	25.1	11563	51.5
	4	11814	52.6	10.7	2211	9.84	5870	26.1	11616	51.7
	5	11699	52.1	10.5	2169	9.65	5801	25.8	11604	51.6
Average		11807	52.5	10.7	2141	9.53	5721	25.5	11588	51.6
Standard Deviation		60.1	0.3	0.2	42.9	0.19	100.4	0.4	35.6	0.2
% COV		0.5	0.5	2.2	2.0	2.00	1.8	1.8	0.3	0.3

Machine Direction

Sample Identification	Specimen Number	Maximum Load (lbs)	Maximum Load (kN)	Elongation @ Break (%)	Load @ 2% (lbs)	Load @ 2% (kN)	Load @ 5% (lbs)	Load @ 5% (kN)	Load @ 10% (lbs)	Load @ 10% (kN)
ParaWeb 50 installed in Gradation 2 (Sandy Gravel)	1	11670	51.9	10.8	2112	9.40	5469	24.3	11463	51.0
	2	11660	51.9	10.8	2118	9.43	5341	23.8	11427	50.8
	3	11606	51.6	10.6	2150	9.57	5482	24.4	11439	50.9
	4	11544	51.4	10.8	2150	9.57	5410	24.1	11390	50.7
	5	11799	52.5	11.1	2098	9.33	5362	23.9	11437	50.9
	6	11587	51.6	10.6	2105	9.37	5306	23.6	11394	50.7
	7	11634	51.8	10.7	2160	9.61	5535	24.6	11426	50.8
	8	11683	52.0	10.7	2145	9.54	5414	24.1	11414	50.8
	9	11589	51.6	10.6	2137	9.51	5510	24.5	11449	50.9
	10	11670	51.9	10.3	2144	9.54	5500	24.5	11508	51.2
Average		11644	51.8	10.7	2132	9.49	5433	24.2	11434	50.9
Standard Deviation		67.0	0.3	0.2	20.7	0.09	74.1	0.3	32.6	0.1
% COV		0.6	0.6	1.9	1.0	0.97	1.4	1.4	0.3	0.3

Percent Retained	98.6	98.6	99.6	99.6	99.6	95.0	95.0	98.7	98.7
RFid	**1.01**	**1.01**							

The testing herein is based upon accepted industry practice as well as the test method listed. Test results reported herein do not apply to samples other than those tested.

Table D-6. Installation damage wide width tensile test results for ParaWeb 50, soil gradation 3.
Installation damage testing (ASTM D 5818, as modified in AASHTO R69-15).
Wide wide tensile testing (ASTM D 6637, Method B, moddified for straps).

Machine Direction

Sample Identification	Specimen Number	Maximum Load (lbs)	Maximum Load (kN)	Elongation @ Break (%)	Load @ 2% (lbs)	Load @ 2% (kN)	Load @ 5% (lbs)	Load @ 5% (kN)	Load @ 10% (lbs)	Load @ 10% (kN)
ParaWeb 50 Baseline	1	11800	52.5	10.5	2121	9.44	5696	25.3	11627	51.7
	2	11876	52.8	11.1	2094	9.32	5602	24.9	11532	51.3
	3	11846	52.7	10.9	2111	9.39	5637	25.1	11563	51.5
	4	11814	52.6	10.7	2211	9.84	5870	26.1	11616	51.7
	5	11699	52.1	10.5	2169	9.65	5801	25.8	11604	51.6
Average		11807	52.5	10.7	2141	9.53	5721	25.5	11588	51.6
Standard Deviation		60.1	0.3	0.2	42.9	0.19	100.4	0.4	35.6	0.2
% COV		0.5	0.5	2.2	2.0	2.00	1.8	1.8	0.3	0.3

Machine Direction

Sample Identification	Specimen Number	Maximum Load (lbs)	Maximum Load (kN)	Elongation @ Break (%)	Load @ 2% (lbs)	Load @ 2% (kN)	Load @ 5% (lbs)	Load @ 5% (kN)	Load @ 10% (lbs)	Load @ 10% (kN)
ParaWeb 50 installed in Gradation 3 (Sand)	1	11799	52.5	10.8	2110	9.39	5351	23.8	11513	51.2
	2	11904	53.0	11.2	2085	9.28	5334	23.7	11484	51.1
	3	11918	53.0	11.2	2091	9.31	5345	23.8	11506	51.2
	4	11808	52.5	10.9	2118	9.43	5441	24.2	11486	51.1
	5	11856	52.8	11.0	2113	9.40	5388	24.0	11453	51.0
	6	11710	52.1	10.6	2089	9.29	5395	24.0	11510	51.2
	7	11794	52.5	10.9	2111	9.39	5430	24.2	11509	51.2
	8	11866	52.8	11.2	2038	9.07	5220	23.2	11414	50.8
	9	11865	52.8	10.9	2116	9.42	5451	24.3	11504	51.2
	10	11787	52.5	10.9	2140	9.52	5567	24.8	11554	51.4
Average		11831	52.6	11.0	2101	9.35	5392	24.0	11493	51.1
Standard Deviation		59.5	0.3	0.2	26.2	0.12	86.5	0.4	36.0	0.2
% COV		0.5	0.5	1.8	1.2	1.25	1.6	1.6	0.3	0.3

Percent Retained	100.2	100.2	102.0	98.1	98.1	94.3	94.3	99.2	99.2
RFid	**1.00**	**1.00**							

The testing herein is based upon accepted industry practice as well as the test method listed. Test results reported herein do not apply to samples other than those tested.

Table D-7. Installation damage wide width tensile test results for ParaWeb 135, soil gradation 1.
Installation damage testing (ASTM D 5818, as modified in AASHTO R69-15).
Wide wide tensile testing (ASTM D 6637, Method B, moddified for straps).

Machine Direction

Sample Identification	Specimen Number	Maximum Load (lbs)	Maximum Load (kN)	Elongation @ Break (%)	Load @ 2% (lbs)	Load @ 2% (kN)	Load @ 5% (lbs)	Load @ 5% (kN)	Load @ 10% (lbs)	Load @ 10% (kN)
ParaWeb 135 Baseline	1	35178	156.5	11.7	5534	24.6	13286	59.1	32810	146.0
	2	35080	156.1	11.8	5660	25.2	13342	59.4	32743	145.7
	3	35148	156.4	11.9	5625	25.0	13148	58.5	32667	145.4
	4	35153	156.4	11.6	5875	26.1	13966	62.1	33179	147.6
	5	35090	156.2	11.9	5876	26.1	13840	61.6	32960	146.7
Average		35130	156.3	11.8	5714	25.4	13516	60.1	32872	146.3
Standard Deviation		38.1	0.2	0.1	138.1	0.6	324.4	1.4	181.4	0.8
% COV		0.1	0.1	1.0	2.4	2.4	2.4	2.4	0.6	0.6

Machine Direction

Sample Identification	Specimen Number	Maximum Load (lbs)	Maximum Load (kN)	Elongation @ Break (%)	Load @ 2% (lbs)	Load @ 2% (kN)	Load @ 5% (lbs)	Load @ 5% (kN)	Load @ 10% (lbs)	Load @ 10% (kN)
ParaWeb 135 installed in Gradation 1 (Coarse Gravel)	1	34865	155.1	11.2	6034	26.85	14956	66.6	33647	149.7
	2	35047	156.0	11.7	5585	24.85	13389	59.6	32824	146.1
	3	34918	155.4	11.9	5442	24.22	12755	56.8	32368	144.0
	4	34915	155.4	12.0	5188	23.09	12296	54.7	32174	143.2
	5	34897	155.3	11.5	5940	26.43	13902	61.9	32952	146.6
	6	35049	156.0	11.9	5423	24.13	12626	56.2	32424	144.3
	7	35341	157.3	11.6	5842	25.99	13923	62.0	33181	147.7
	8	34904	155.3	11.9	5332	23.73	12606	56.1	32292	143.7
	9	34756	154.7	11.8	5300	23.59	12409	55.2	32192	143.3
	10	35099	156.2	11.8	5781	25.73	13681	60.9	32952	146.6
Average		34979	155.7	11.7	5587	24.9	13254	59.0	32701	145.5
Standard Deviation		154.1	0.7	0.2	279.7	1.2	816.1	3.6	464.7	2.1
% COV		0.4	0.4	1.9	5.0	5.0	6.2	6.2	1.4	1.4

Percent Retained	99.6	99.6	99.5	97.8	97.8	98.1	98.1	99.5	99.5
RFid	**1.00**	**1.00**							

The testing herein is based upon accepted industry practice as well as the test method listed. Test results reported herein do not apply to samples other than those tested.

Table D-8. Installation damage wide width tensile test results for ParaWeb 135, soil gradation 2.
Installation damage testing (ASTM D 5818, as modified in AASHTO R69-15).
Wide wide tensile testing (ASTM D 6637, Method B, moddified for straps).

Machine Direction

Sample Identification	Specimen Number	Maximum Load (lbs)	Maximum Load (kN)	Elongation @ Break (%)	Load @ 2% (lbs)	Load @ 2% (kN)	Load @ 5% (lbs)	Load @ 5% (kN)	Load @ 10% (lbs)	Load @ 10% (kN)
ParaWeb 135 Baseline	1	35178	156.5	11.7	5534	24.6	13286	59.1	32810	146.0
	2	35080	156.1	11.8	5660	25.2	13342	59.4	32743	145.7
	3	35148	156.4	11.9	5625	25.0	13148	58.5	32667	145.4
	4	35153	156.4	11.6	5875	26.1	13966	62.1	33179	147.6
	5	35090	156.2	11.9	5876	26.1	13840	61.6	32960	146.7
Average		35130	156.3	11.8	5714	25.4	13516	60.1	32872	146.3
Standard Deviation		38.1	0.2	0.1	138.1	0.6	324.4	1.4	181.4	0.8
% COV		0.1	0.1	1.0	2.4	2.4	2.4	2.4	0.6	0.6

Machine Direction

Sample Identification	Specimen Number	Maximum Load (lbs)	Maximum Load (kN)	Elongation @ Break (%)	Load @ 2% (lbs)	Load @ 2% (kN)	Load @ 5% (lbs)	Load @ 5% (kN)	Load @ 10% (lbs)	Load @ 10% (kN)
ParaWeb 135 installed in Gradation 2 (Sandy Gravel)	1	35375	157.4	12.0	5402	24.04	12769	56.8	32394	144.2
	2	35086	156.1	12.0	5360	23.85	12671	56.4	32387	144.1
	3	35027	155.9	12.0	5476	24.37	13007	57.9	32469	144.5
	4	34909	155.3	11.6	5402	24.04	12904	57.4	32429	144.3
	5	34854	155.1	12.0	5207	23.17	12219	54.4	32107	142.9
	6	35097	156.2	11.7	5601	24.92	13340	59.4	32833	146.1
	7	34992	155.7	11.7	5502	24.48	13310	59.2	32810	146.0
	8	34725	154.5	11.6	5671	25.23	13403	59.6	32718	145.6
	9	35125	156.3	11.8	5603	24.94	13484	60.0	32880	146.3
	10	35122	156.3	12.1	5305	23.61	12575	56.0	32294	143.7
Average		35031	155.9	11.8	5453	24.3	12968	57.7	32532	144.8
Standard Deviation		168.5	0.7	0.2	138.1	0.6	395.0	1.8	248.2	1.1
% COV		0.5	0.5	1.5	2.5	2.5	3.0	3.0	0.8	0.8

Percent Retained		99.7	99.7	100.4	95.4	95.4	95.9	95.9	99.0	99.0
RFid		**1.00**	**1.00**							

The testing herein is based upon accepted industry practice as well as the test method listed. Test results reported herein do not apply to samples other than those tested.

Table D-9. Installation damage wide width tensile test results for ParaWeb 135, soil gradation 3.
Installation damage testing (ASTM D 5818, as modified in AASHTO R69-15).
Wide wide tensile testing (ASTM D 6637, Method B, moddified for straps).

Machine Direction

Sample Identification	Specimen Number	Maximum Load (lbs)	Maximum Load (kN)	Elongation @ Break (%)	Load @ 2% (lbs)	Load @ 2% (kN)	Load @ 5% (lbs)	Load @ 5% (kN)	Load @ 10% (lbs)	Load @ 10% (kN)
ParaWeb 135 Baseline	1	35178	156.5	11.7	5534	24.6	13286	59.1	32810	146.0
	2	35080	156.1	11.8	5660	25.2	13342	59.4	32743	145.7
	3	35148	156.4	11.9	5625	25.0	13148	58.5	32667	145.4
	4	35153	156.4	11.6	5875	26.1	13966	62.1	33179	147.6
	5	35090	156.2	11.9	5876	26.1	13840	61.6	32960	146.7
Average		35130	156.3	11.8	5714	25.4	13516	60.1	32872	146.3
Standard Deviation		38.1	0.2	0.1	138.1	0.6	324.4	1.4	181.4	0.8
% COV		0.1	0.1	1.0	2.4	2.4	2.4	2.4	0.6	0.6

Machine Direction

Sample Identification	Specimen Number	Maximum Load (lbs)	Maximum Load (kN)	Elongation @ Break (%)	Load @ 2% (lbs)	Load @ 2% (kN)	Load @ 5% (lbs)	Load @ 5% (kN)	Load @ 10% (lbs)	Load @ 10% (kN)
ParaWeb 135 installed in Gradation 3 (Sand)	1	35115	156.3	12.0	5270	23.45	12748	56.7	32452	144.4
	2	34860	155.1	11.9	4977	22.15	12049	53.6	31931	142.1
	3	35049	156.0	12.0	5181	23.06	12466	55.5	32338	143.9
	4	34874	155.2	12.0	4920	21.89	11831	52.6	31958	142.2
	5	34757	154.7	12.1	4815	21.43	11630	51.8	31630	140.8
	6	34922	155.4	12.2	4914	21.87	11666	51.9	31571	140.5
	7	35122	156.3	11.9	5506	24.50	13037	58.0	32576	145.0
	8	35172	156.5	12.2	5083	22.62	12178	54.2	31995	142.4
	9	35187	156.6	12.4	4878	21.71	11815	52.6	31610	140.7
	10	34815	154.9	12.0	5126	22.81	12277	54.6	32117	142.9
Average		34987	155.7	12.1	5067	22.5	12170	54.2	32018	142.5
Standard Deviation		151.1	0.7	0.1	201.0	0.9	445.7	2.0	337.7	1.5
% COV		0.4	0.4	1.2	4.0	4.0	3.7	3.7	1.1	1.1

Percent Retained		99.6	99.6	102.4	88.7	88.7	90.0	90.0	97.4	97.4
RFid		**1.00**	**1.00**							

The testing herein is based upon accepted industry practice as well as the test method listed. Test results reported herein do not apply to samples other than those tested.

Table D-10. Installation damage wide width tensile test results for Linear Composites ParaLink 300 geogrid, soil gradation 1.
Installation damage testing (ASTM D 5818, as modified in AASHTO R69-15).
Wide wide tensile testing (ASTM D 6637, Method B).

Machine Direction

Sample Identification	Specimen Number	Ribs per Foot Width	Number of Ribs Tested	Maximum Load (lbs)	Maximum Load (lbs/ft)	Maximum Load (kN/m)	Elongation @ Break (%)	Load @ 2% lbs	Load @ 2% (lbs/ft)	Load @ 2% (kN/m)	Load @ 5% lbs	Load @ 5% (lbs/ft)	Load @ 5% (kN/m)	Load @ 10% lbs	Load @ 10% (lbs/ft)	Load @ 10% (kN/m)
ParaLink 300 Baseline	1	1.72	1	12450	21397	312.4	12.1	1744	2997	43.76	3633	6244	91.2	11161	19182	280.1
	2	1.72	1	12405	21320	311.3	10.9	1957	3363	49.11	4794	8239	120.3	12008	20638	301.3
	3	1.72	1	12241	21038	307.2	10.3	1868	3210	46.87	4283	7361	107.5	12010	20641	301.4
	4	1.72	1	12080	20762	303.1	9.68	2014	3461	50.54	4851	8337	121.7			
	5	1.72	1	12402	21315	311.2	11.3	1756	3018	44.06	4176	7177	104.8	11743	20182	294.7
Average				12316	21166	309.0	10.8	1868	3210	46.87	4347	7472	109.1	11731	20161	294.3
Standard Deviation				153.8	264.3	3.86	0.92	119.5	205.4	3.00	499.2	858.0	12.53	399.8	687	10.03
% COV				1.25	1.25	1.25	8.50	6.40	6.40	6.40	11.48	11.48	11.48	3.41	3.41	3.41

Machine Direction

Sample Identification	Specimen Number	Ribs per Foot Width	Number of Ribs Tested	Maximum Load (lbs)	Maximum Load (lbs/ft)	Maximum Load (kN/m)	Elongation @ Break (%)	Load @ 2% lbs	Load @ 2% (lbs/ft)	Load @ 2% (kN/m)	Load @ 5% lbs	Load @ 5% (lbs/ft)	Load @ 5% (kN/m)	Load @ 10% lbs	Load @ 10% (lbs/ft)	Load @ 10% (kN/m)
ParaLink 300 installed in Gradation 1 (Coarse Gravel)	1	1.72	1	10196	17524	255.9	7.19	2271	3904	57.00	7513	12912	188.5			
	2	1.72	1	12123	20836	304.2	10.4	2200	3781	55.21	5875	10098	147.4	12054	20718	302.5
	3	1.72	1	12135	20856	304.5	9.92	2118	3640	53.15	5693	9785	142.9			
	4	1.72	1	12440	21381	312.2	11.3	2110	3627	52.96	5279	9073	132.5	11854	20374	297.5
	5	1.72	1	11517	19794	289.0	10.0	2244	3856	56.30	5849	10053	146.8	11475	19721	287.9
	6	1.72	1	11787	20258	295.8	10.2	2192	3767	54.99	5754	9890	144.4	11770	20228	295.3
	7	1.72	1	12111	20814	303.9	10.7	2147	3689	53.86	5362	9215	134.5	11797	20275	296.0
	8	1.72	1	11956	20548	300.0	10.4	2136	3671	53.59	5349	9193	134.2	11842	20352	297.1
	9	1.72	1	11310	19438	283.8	8.91	2153	3700	54.03	5841	10039	146.6			
	10	1.72	1	11040	18974	277.0	7.83	2265	3893	56.84	7042	12102	176.7			
Average				11662	20042	292.6	9.67	2184	3753	54.79	5956	10236	149.4	11799	20278	296.1
Standard Deviation				668.8	1149	16.78	1.30	60.14	103.36	1.51	739.6	1271.1	18.56	187.7	322.6	4.71
% COV				5.73	5.73	5.73	13.43	2.75	2.75	2.75	12.42	12.42	12.42	1.59	1.59	1.59

Percent Retained				94.7	94.7	94.7	89.1	116.9	116.9	116.9	137.0	137.0	137.0	100.6	100.6	100.6
RFid				**1.06**	**1.06**	**1.06**										

The testing herein is based upon accepted industry practice as well as the test method listed. Test results reported herein do not apply to samples other than those tested.

Table D-11. Installation damage wide width tensile test results for Linear Composites ParaLink 300 geogrid, soil gradation 2.
Installation damage testing (ASTM D 5818, as modified in AASHTO R69-15).
Wide wide tensile testing (ASTM D 6637, Method B).

Machine Direction

Sample Identification	Specimen Number	Ribs per Foot Width	Number of Ribs Tested	Maximum Load (lbs)	Maximum Load (lbs/ft)	Maximum Load (kN/m)	Elongation @ Break (%)	Load @ 2% lbs	Load @ 2% (lbs/ft)	Load @ 2% (kN/m)	Load @ 5% lbs	Load @ 5% (lbs/ft)	Load @ 5% (kN/m)	Load @ 10% lbs	Load @ 10% (lbs/ft)	Load @ 10% (kN/m)
ParaLink 300 Baseline	1	1.72	1	12450	21397	312.4	12.1	1744	2997	43.76	3633	6244	91.2	11161	19182	280.1
	2	1.72	1	12405	21320	311.3	10.9	1957	3363	49.11	4794	8239	120.3	12008	20638	301.3
	3	1.72	1	12241	21038	307.2	10.3	1868	3210	46.87	4283	7361	107.5	12010	20641	301.4
	4	1.72	1	12080	20762	303.1	9.7	2014	3461	50.54	4851	8337	121.7			
	5	1.72	1	12402	21315	311.2	11.3	1756	3018	44.06	4176	7177	104.8	11743	20182	294.7
Average				12316	21166	309.0	10.8	1868	3210	46.87	4347	7472	109.1	11731	20161	294.3
Standard Deviation				153.8	264.3	3.86	0.92	119.5	205.4	3.00	499.2	858.0	12.53	399.8	687	10.03
% COV				1.25	1.25	1.25	8.50	6.40	6.40	6.40	11.48	11.48	11.48	3.41	3.41	3.41

Machine Direction

Sample Identification	Specimen Number	Ribs per Foot Width	Number of Ribs Tested	Maximum Load (lbs)	Maximum Load (lbs/ft)	Maximum Load (kN/m)	Elongation @ Break (%)	Load @ 2% lbs	Load @ 2% (lbs/ft)	Load @ 2% (kN/m)	Load @ 5% lbs	Load @ 5% (lbs/ft)	Load @ 5% (kN/m)	Load @ 10% lbs	Load @ 10% (lbs/ft)	Load @ 10% (kN/m)
ParaLink 300 installed in Gradation 2 (Sandy Gravel)	1	1.72	1	12447	21392	312.3	11.9	1810	3110	45.41	3775	6488	94.7	11281	19388	283.1
	2	1.72	1	12415	21337	311.5	10.7	2013	3461	50.52	5150	8851	129.2	12175	20925	305.5
	3	1.72	1	12526	21528	314.3	10.5	1962	3371	49.22	4791	8234	120.2	12358	21239	310.1
	4	1.72	1	12389	21292	310.9	11.1	1978	3400	49.64	4642	7978	116.5	11810	20297	296.3
	5	1.72	1	12456	21408	312.6	12.1	1903	3271	47.76	4106	7057	103.0	11339	19488	284.5
	6	1.72	1	12200	20968	306.1	9.94	2341	4024	58.75	6461	11105	162.1			
	7	1.72	1	12426	21357	311.8	10.8	2100	3610	52.71	5603	9629	140.6	12194	20958	306.0
	8	1.72	1	12536	21546	314.6	9.91	2097	3603	52.61	5359	9211	134.5			
	9	1.72	1	12383	21282	310.7	10.6	1985	3411	49.80	4692	8063	117.7	12145	20874	304.8
	10	1.72	1	12540	21552	314.7	11.0	1952	3354	48.97	4423	7601	111.0	12000	20624	301.1
Average				12432	21366	311.9	10.9	2014	3462	50.54	4900	8422	123.0	11913	20474	298.9
Standard Deviation				100.2	172	2.51	0.71	143.02	245.80	3.59	778.2	1337.5	19.53	404.7	695.6	10.16
% COV				0.81	0.81	0.81	6.56	7.10	7.10	7.10	15.88	15.88	15.88	3.40	3.40	3.40

Percent Retained				100.9	100.9	100.9	100.1	107.8	107.8	107.8	112.7	112.7	112.7	101.6	101.6	101.6
RFid				**1.00**	**1.00**	**1.00**										

The testing herein is based upon accepted industry practice as well as the test method listed. Test results reported herein do not apply to samples other than those tested.

Table D-12. Installation damage wide width tensile test results for Linear Composites ParaLink 300 geogrid, soil gradation 3.
Installation damage testing (ASTM D 5818, as modified in AASHTO R69-15).
Wide wide tensile testing (ASTM D 6637, Method B).

Machine Direction

Sample Identification	Specimen Number	Ribs per Foot Width	Number of Ribs Tested	Maximum Load (lbs)	Maximum Load (lbs/ft)	Maximum Load (kN/m)	Elongation @ Break (%)	Load @ 2% lbs	Load @ 2% (lbs/ft)	Load @ 2% (kN/m)	Load @ 5% lbs	Load @ 5% (lbs/ft)	Load @ 5% (kN/m)	Load @ 10% lbs	Load @ 10% (lbs/ft)	Load @ 10% (kN/m)
ParaLink 300 Baseline	1	1.72	1	12450	21397	312.4	12.1	1744	2997	43.76	3633	6244	91.2	11161	19182	280.1
	2	1.72	1	12405	21320	311.3	10.9	1957	3363	49.11	4794	8239	120.3	12008	20638	301.3
	3	1.72	1	12241	21038	307.2	10.3	1868	3210	46.87	4283	7361	107.5	12010	20641	301.4
	4	1.72	1	12080	20762	303.1	9.7	2014	3461	50.54	4851	8337	121.7			
	5	1.72	1	12402	21315	311.2	11.3	1756	3018	44.06	4176	7177	104.8	11743	20182	294.7
Average				12316	21166	309.0	10.8	1868	3210	46.87	4347	7472	109.1	11731	20161	294.3
Standard Deviation				153.8	264.3	3.86	0.92	119.5	205.4	3.00	499.2	858.0	12.53	399.8	687	10.03
% COV				1.25	1.25	1.25	8.50	6.40	6.40	6.40	11.48	11.48	11.48	3.41	3.41	3.41

Machine Direction

Sample Identification	Specimen Number	Ribs per Foot Width	Number of Ribs Tested	Maximum Load (lbs)	Maximum Load (lbs/ft)	Maximum Load (kN/m)	Elongation @ Break (%)	Load @ 2% lbs	Load @ 2% (lbs/ft)	Load @ 2% (kN/m)	Load @ 5% lbs	Load @ 5% (lbs/ft)	Load @ 5% (kN/m)	Load @ 10% lbs	Load @ 10% (lbs/ft)	Load @ 10% (kN/m)
ParaLink 300 installed in Gradation 3 (Sand)	1	1.72	1	12155	20891	305.0	11.1	1979	3402	49.66	4815	8276	120.8	11775	20238	295.5
	2	1.72	1	12167	20910	305.3	10.2	2025	3480	50.80	5245	9015	131.6	12087	20774	303.3
	3	1.72	1	12640	21724	317.2	9.84	2104	3617	52.80	5890	10122	147.8			
	4	1.72	1	12398	21307	311.1	9.83	2045	3515	51.31	5660	9728	142.0			
	5	1.72	1	12306	21150	308.8	11.0	2001	3439	50.21	5061	8697	127.0	11946	20531	299.8
	6	1.72	1	12590	21639	315.9	11.0	2089	3590	52.41	5392	9267	135.3	12108	20809	303.8
	7	1.72	1	12311	21158	308.9	11.4	1931	3319	48.46	4588	7885	115.1	11578	19899	290.5
	8	1.72	1	12332	21195	309.5	10.7	1941	3337	48.71	4645	7983	116.5	12013	20647	301.4
	9	1.72	1	12571	21605	315.4	11.0	1974	3393	49.54	4636	7968	116.3	12046	20704	302.3
	10	1.72	1	12515	21508	314.0	11.1	1919	3298	48.15	4765	8190	119.6	11988	20603	300.8
Average				12398	21309	311.1	10.7	2001	3439	50.21	5070	8713	127.2	11943	20526	299.7
Standard Deviation				173.8	299	4.36	0.57	64.36	110.62	1.62	461.2	792.6	11.57	180.0	309.4	4.52
% COV				1.40	1.40	1.40	5.29	3.22	3.22	3.22	9.10	9.10	9.10	1.51	1.51	1.51

Percent Retained				100.7	100.7	100.7	98.7	107.1	107.1	107.1	116.6	116.6	116.6	101.8	101.8	101.8
RFid				**1.00**	**1.00**	**1.00**										

The testing herein is based upon accepted industry practice as well as the test method listed. Test results reported herein do not apply to samples other than those tested.

Table D-13. Installation damage wide width tensile test results for Linear Composites ParaLink 1000 geogrid, soil gradation 1.
Installation damage testing (ASTM D 5818, as modified in AASHTO R69-15).
Wide wide tensile testing (ASTM D 6637, Method B).

Machine Direction

Sample Identification	Specimen Number	Ribs per Foot Width	Number of Ribs Tested	Maximum Load (lbs)	Maximum Load (lbs/ft)	Maximum Load (kN/m)	Elongation @ Break (%)	Load @ 2% lbs	Load @ 2% (lbs/ft)	Load @ 2% (kN/m)	Load @ 5% lbs	Load @ 5% (lbs/ft)	Load @ 5% (kN/m)	Load @ 10% lbs	Load @ 10% (lbs/ft)	Load @ 10% (kN/m)
ParaLink 1000 Baseline	1	2.51	1	28980	72753	1062.2	11.9	3811	9567	139.68	10077	25298	369.3	26393	66259	967.4
	2	2.51	1	29106	73069	1066.8	12.6	3886	9756	142.43	10161	25509	372.4	25878	64966	948.5
	3	2.51	1	29218	73351	1070.9	12.5	3930	9866	144.05	10358	26003	379.6	26368	66196	966.5
	4	2.51	1	29143	73162	1068.2	12.2	3140	7883	115.09	9356	23488	342.9	26064	65433	955.3
	5	2.51	1	29391	73785	1077.3	12.7	3186	7998	116.78	9103	22853	333.6	25283	63472	926.7
Average				29168	73224	1069.1	12.4	3591	9014	131.61	9811	24630	359.6	25997	65265	952.9
Standard Deviation				151.7	380.8	5.56	0.33	393.0	986.6	14.40	547.9	1375.5	20.08	453.6	1139	16.62
% COV				0.52	0.52	0.52	2.64	10.95	10.95	10.95	5.58	5.58	5.58	1.74	1.74	1.74

Machine Direction

Sample Identification	Specimen Number	Ribs per Foot Width	Number of Ribs Tested	Maximum Load (lbs)	Maximum Load (lbs/ft)	Maximum Load (kN/m)	Elongation @ Break (%)	Load @ 2% lbs	Load @ 2% (lbs/ft)	Load @ 2% (kN/m)	Load @ 5% lbs	Load @ 5% (lbs/ft)	Load @ 5% (kN/m)	Load @ 10% lbs	Load @ 10% (lbs/ft)	Load @ 10% (kN/m)
ParaLink 1000 installed in Gradation 1 (Coarse Gravel)	1	2.51	1	28990	72778	1062.6	11.6	5044	12662	184.86	12222	30684	448.0	27323	68592	1001.4
	2	2.51	1	28763	72208	1054.2	11.3	4751	11926	174.12	11868	29795	435.0	27185	68247	996.4
	3	2.51	1	29629	74382	1086.0	12.0	4785	12013	175.39	11573	29053	424.2	27056	67924	991.7
	4	2.51	1	29224	73365	1071.1	11.8	4931	12380	180.75	12115	30415	444.1	27366	68700	1003.0
	5	2.51	1	29323	73614	1074.8	12.2	4619	11596	169.31	11250	28242	412.3	26853	67414	984.2
	6	2.51	1	29120	73106	1067.3	11.7	4734	11884	173.51	11354	28505	416.2	26959	67681	988.1
	7	2.51	1	29249	73428	1072.1	12.1	4533	11379	166.13	10949	27488	401.3	26512	66557	971.7
	8	2.51	1	29253	73437	1072.2	11.7	4804	12059	176.07	11707	29391	429.1	27304	68545	1000.8
	9	2.51	1	29046	72920	1064.6	11.8	4502	11301	165.00	10903	27372	399.6	26608	66799	975.3
	10	2.51	1	29183	73264	1069.6	12.0	4555	11436	166.97	11520	28919	422.2	26971	67709	988.5
Average				29178	73250	1069.5	11.8	4726	11864	173.21	11546	28986	423.2	27014	67817	990.1
Standard Deviation				227.4	571	8.34	0.27	176.84	443.94	6.48	448.1	1124.9	16.42	294.6	739.6	10.80
% COV				0.78	0.78	0.78	2.30	3.74	3.74	3.74	3.88	3.88	3.88	1.09	1.09	1.09

Percent Retained				100.0	100.0	100.0	95.6	131.6	131.6	131.6	117.7	117.7	117.7	103.9	103.9	103.9
RFid				**1.00**	**1.00**	**1.00**										

The testing herein is based upon accepted industry practice as well as the test method listed. Test results reported herein do not apply to samples other than those tested.

Table D-14. Installation damage wide width tensile test results for Linear Composites ParaLink 1000 geogrid, soil gradation 2.
Installation damage testing (ASTM D 5818, as modified in AASHTO R69-15).
Wide wide tensile testing (ASTM D 6637, Method B).

Machine Direction

Sample Identification	Specimen Number	Ribs per Foot Width	Number of Ribs Tested	Maximum Load (lbs)	Maximum Load (lbs/ft)	Maximum Load (kN/m)	Elongation @ Break (%)	Load @ 2% lbs	Load @ 2% (lbs/ft)	Load @ 2% (kN/m)	Load @ 5% lbs	Load @ 5% (lbs/ft)	Load @ 5% (kN/m)	Load @ 10% lbs	Load @ 10% (lbs/ft)	Load @ 10% (kN/m)
ParaLink 1000 Baseline	1	2.51	1	28980	72753	1062.2	11.9	3811	9567	139.68	10077	25298	369.3	26393	66259	967.4
	2	2.51	1	29106	73069	1066.8	12.6	3886	9756	142.43	10161	25509	372.4	25878	64966	948.5
	3	2.51	1	29218	73351	1070.9	12.5	3930	9866	144.05	10358	26003	379.6	26368	66196	966.5
	4	2.51	1	29143	73162	1068.2	12.2	3140	7883	115.09	9356	23488	342.9	26064	65433	955.3
	5	2.51	1	29391	73785	1077.3	12.7	3186	7998	116.78	9103	22853	333.6	25283	63472	926.7
Average				29168	73224	1069.1	12.4	3591	9014	131.61	9811	24630	359.6	25997	65265	952.9
Standard Deviation				151.7	380.8	5.56	0.33	393.0	986.6	14.40	547.9	1375.5	20.08	453.6	1139	16.62
% COV				0.52	0.52	0.52	2.64	10.95	10.95	10.95	5.58	5.58	5.58	1.74	1.74	1.74

Machine Direction

Sample Identification	Specimen Number	Ribs per Foot Width	Number of Ribs Tested	Maximum Load (lbs)	Maximum Load (lbs/ft)	Maximum Load (kN/m)	Elongation @ Break (%)	Load @ 2% lbs	Load @ 2% (lbs/ft)	Load @ 2% (kN/m)	Load @ 5% lbs	Load @ 5% (lbs/ft)	Load @ 5% (kN/m)	Load @ 10% lbs	Load @ 10% (lbs/ft)	Load @ 10% (kN/m)
ParaLink 1000 installed in Gradation 2 (Sandy Gravel)	1	2.51	1	29441	73911	1079.1	11.6	4897	12294	179.50	12172	30557	446.1	27533	69119	1009.1
	2	2.51	1	29206	73322	1070.5	12.2	4435	11135	162.57	11166	28031	409.3	26862	67437	984.6
	3	2.51	1	29059	72950	1065.1	11.9	4587	11515	168.12	11060	27767	405.4	26640	66879	976.4
	4	2.51	1	29291	73533	1073.6	12.2	4615	11585	169.14	11263	28276	412.8	26851	67408	984.2
	5	2.51	1	29077	72997	1065.8	12.1	4662	11704	170.88	11646	29236	426.8	26950	67658	987.8
	6	2.51	1	29294	73543	1073.7	12.3	4558	11442	167.05	11105	27879	407.0	26572	66709	973.9
	7	2.51	1	29270	73480	1072.8	12.2	4513	11330	165.41	10890	27338	399.1	26412	66307	968.1
	8	2.51	1	29128	73124	1067.6	11.8	4471	11224	163.88	11371	28545	416.8	26800	67279	982.3
	9	2.51	1	28901	72556	1059.3	11.7	4625	11611	169.52	11560	29021	423.7	27009	67806	990.0
	10	2.51	1	29009	72827	1063.3	12.1	4435	11133	162.54	10989	27589	402.8	26511	66554	971.7
Average				29168	73224	1069.1	12.0	4580	11497	167.86	11322	28424	415.0	26814	67316	982.8
Standard Deviation				161.8	406	5.93	0.25	137.27	344.61	5.03	384.0	963.9	14.07	319.5	802.2	11.71
% COV				0.55	0.55	0.55	2.10	3.00	3.00	3.00	3.39	3.39	3.39	1.19	1.19	1.19

Percent Retained				100.0	100.0	100.0	97.0	127.5	127.5	127.5	115.4	115.4	115.4	103.1	103.1	103.1
RFid				**1.00**	**1.00**	**1.00**										

The testing herein is based upon accepted industry practice as well as the test method listed. Test results reported herein do not apply to samples other than those tested.

Table D-15. Installation damage wide width tensile test results for Linear Composites ParaLink 1000 geogrid, soil gradation 3.
Installation damage testing (ASTM D 5818, as modified in AASHTO R69-15).
Wide wide tensile testing (ASTM D 6637, Method B).

Machine Direction

Sample Identification	Specimen Number	Ribs per Foot Width	Number of Ribs Tested	Maximum Load (lbs)	Maximum Load (lbs/ft)	Maximum Load (kN/m)	Elongation @ Break (%)	Load @ 2% lbs	Load @ 2% (lbs/ft)	Load @ 2% (kN/m)	Load @ 5% lbs	Load @ 5% (lbs/ft)	Load @ 5% (kN/m)	Load @ 10% lbs	Load @ 10% (lbs/ft)	Load @ 10% (kN/m)
ParaLink 1000 Baseline	1	2.51	1	28980	72753	1062.2	11.9	3811	9567	139.68	10077	25298	369.3	26393	66259	967.4
	2	2.51	1	29106	73069	1066.8	12.6	3886	9756	142.43	10161	25509	372.4	25878	64966	948.5
	3	2.51	1	29218	73351	1070.9	12.5	3930	9866	144.05	10358	26003	379.6	26368	66196	966.5
	4	2.51	1	29143	73162	1068.2	12.2	3140	7883	115.09	9356	23488	342.9	26064	65433	955.3
	5	2.51	1	29391	73785	1077.3	12.7	3186	7998	116.78	9103	22853	333.6	25283	63472	926.7
Average				29168	73224	1069.1	12.4	3591	9014	131.61	9811	24630	359.6	25997	65265	952.9
Standard Deviation				151.7	380.8	5.56	0.33	393.0	986.6	14.40	547.9	1375.5	20.08	453.6	1139	16.62
% COV				0.52	0.52	0.52	2.64	10.95	10.95	10.95	5.58	5.58	5.58	1.74	1.74	1.74

Machine Direction

Sample Identification	Specimen Number	Ribs per Foot Width	Number of Ribs Tested	Maximum Load (lbs)	Maximum Load (lbs/ft)	Maximum Load (kN/m)	Elongation @ Break (%)	Load @ 2% lbs	Load @ 2% (lbs/ft)	Load @ 2% (kN/m)	Load @ 5% lbs	Load @ 5% (lbs/ft)	Load @ 5% (kN/m)	Load @ 10% lbs	Load @ 10% (lbs/ft)	Load @ 10% (kN/m)
ParaLink 1000 installed in Gradation 3 (Sand)	1	2.51	1	29147	73172	1068.3	12.0	4361	10948	159.84	11214	28151	411.0	26930	67607	987.1
	2	2.51	1	29017	72845	1063.5	12.1	4111	10322	150.70	10388	26079	380.8	26248	65894	962.1
	3	2.51	1	28696	72041	1051.8	12.1	3799	9538	139.26	9928	24924	363.9	26000	65272	953.0
	4	2.51	1	29152	73184	1068.5	12.5	3592	9017	131.65	9692	24332	355.3	25664	64429	940.7
	5	2.51	1	29033	72886	1064.1	12.3	3694	9273	135.39	10072	25284	369.2	26080	65474	955.9
	6	2.51	1	29243	73413	1071.8	12.5	3547	8906	130.02	9850	24728	361.0	26033	65355	954.2
	7	2.51	1	29155	73192	1068.6	12.2	3951	9919	144.81	10362	26014	379.8	26477	66470	970.5
	8	2.51	1	29106	73070	1066.8	12.6	3709	9312	135.96	9583	24057	351.2	25518	64061	935.3
	9	2.51	1	29072	72985	1065.6	12.5	3861	9693	141.51	10198	25601	373.8	26132	65603	957.8
	10	2.51	1	28807	72320	1055.9	11.8	4416	11086	161.86	11079	27814	406.1	26446	66390	969.3
Average				29043	72911	1064.5	12.3	3904	9801	143.10	10237	25699	375.2	26153	65655	958.6
Standard Deviation				168.8	424	6.19	0.25	304.75	765.06	11.17	547.8	1375.1	20.08	406.8	1021.3	14.91
% COV				0.58	0.58	0.58	2.05	7.81	7.81	7.81	5.35	5.35	5.35	1.56	1.56	1.56

Percent Retained				99.6	99.6	99.6	99.1	108.7	108.7	108.7	104.3	104.3	104.3	100.6	100.6	100.6
RFid				**1.00**	**1.00**	**1.00**										

The testing herein is based upon accepted industry practice as well as the test method listed. Test results reported herein do not apply to samples other than those tested.

Table D-19. Standard test soil gradations (% passing).

Standard Installation Damage Soils Used for Field Exposures				
US Sieve No.	**Sieve Size (mm)**	**Percent Passing by Weight**		
		Type 1 (Coarse Gravel)	**Type2 (Sandy Gravel)**	**Type 3 (Silty Sand)**
6 - in	150	100.0	100.0	100.0
3 - in.	75	100.0	100.0	100.0
2 - in.	50	100.0	100.0	100.0
1.5 - in.	38	-	100.0	100.0
1 - in.	25	26.4	100.0	100.0
3/4 - in.	19	1.6	100.0	100.0
1/2 - in.	12.5	-	-	100.0
3/8 - in.	9.5	1.1	99.1	100.0
No. 4	4.75	1.1	40.5	100.0
No. 10	1.7	1.1	4.2	77.6
No. 20	0.85	1.1	3.4	48.8
No. 40	0.425	1.0	3.3	33.1
No. 60	0.25	-	-	21.5
No. 100	0.15	-	-	12.2
No. 200	0.075	-	-	4.4
D50, mm		28.5	5.3	0.9
LA Abrasion Small Drum Method B 500 Cycles		20.2% loss	12.6% loss	
Liquid Limit, %		-	-	-
Plasticity Index, %		-	-	-
Angularity (ASTM D 2488)		Angular to Subangular	Angular	Angular to Subangular
AASHTO Classification		No. 4 Aggregate	No. 89 Aggregate	A-1b Soil
Soil Classification		GP	GP	SM
		Poorly Graded Gravel	Poorly Graded Gravel with Sand	Well Graded Silty Sand

Figure D-1. Lifting Plates positioned between ties and covered with first lift of compacted soil/aggregate.

Figure D-2. Grid positioned over compacted base and covered. Cover soil/aggregate is uniformly spread and compacted using field-scale equipment and procedures.

Figure D-3. The density of the compacted soil is measured with a nuclear density gauge.

Figure D-4. The steel plates are tilted to facilitate exhumation.

Appendix E: ISO/EN Laboratory Installation Damage Detailed Test Results

E.1 ISO/EN Laboratory Installation Damage Test Program

Testing is done per the EN/ISO 10722. Five wide width tensile specimens are exposed to 200 cycles producing between 209 lb/ft^2 (10 kPa) minimum and 10,443 lb/ft^2 (500 kPa) maximum stress at a frequency of 1 Hz. The aggregate used is a sintered aluminum oxide with a grain size such that 100% shall pass a 10 mm sieve and 0% shall pass a 5 mm sieve. The exposed specimens and five baseline specimens are tested according to ISO/EN 10319.

Representative photos of test apparatus and aggregate are provided in Figures E-1 and E-2. Detailed test results are provided in Tables E-1 through E-3.

.

Figure E-1. ISO/EN 10722, laboratory installation damage test apparatus.

Figure E-2. ISO/EN 10722, laboratory installation damage aggregate.

Table E-1: Laboratory installation damage (ISO/EN 10722) tensile test results for ParaWeb 30

PARAMETER	TEST REPLICATE NUMBER 1	2	3	4	5	MEAN	STD. DEV.	COEF. VARI.	PERCENT RETAINED
Laboratory Installation Damage (ISO/EN 10722)									
Strength Retained measured via wide width tensile (ISO/EN 10319)									
MD - Tensile Strength (lbs) - B	7169	7058	7073	7152	7154	**7121**	52	1	
MD Tensile Strength (kN) - B	31.9	31.4	31.5	31.8	31.8	**31.7**	0.2	0.7	
MD - Tensile Strength (lbs) - E	5778	5533	5787	5854	6058	**5802**	188	3	
MD Tensile Strength (kN) - E	25.7	24.6	25.8	26.1	27.0	**25.8**	0.8	3.2	**81**
MD - Elong. @ Max. Load (%) - B	11.5	10.6	10.7	11.3	11.2	**11.1**	0.4	3.5	
MD - Elong. @ Max. Load (%) - E	9.89	9.39	9.62	9.52	9.53	**9.59**	0.19	1.95	**87**

B - Baseline Unexposed
E - Exposed

MD - Machine Direction TD - Transverse/Cross Machine Direction

The testing herein is based upon accepted industry practice as well as the test method listed. Test results reported herein do not apply to samples other than those tested.

Table E-2: Laboratory installation damage (ISO/EN 10722) tensile test results for ParaWeb 40

PARAMETER	TEST REPLICATE NUMBER 1	2	3	4	5	MEAN	STD. DEV.	COEF. VARI.	PERCENT RETAINED
Laboratory Installation Damage (ISO/EN 10722)									
Strength Retained measured via wide width tensile (ISO/EN 10319)									
MD - Tensile Strength (lbs) - B	10031	10031	10180	10187	10217	**10129**	90	1	
MD Tensile Strength (kN) - B	44.6	44.6	45.3	45.3	45.5	**45.1**	0.4	0.9	
MD - Tensile Strength (lbs) - E	9254	9329	9378	9636	9304	**9380**	150	2	
MD Tensile Strength (kN) - E	41.2	41.5	41.7	42.9	41.4	**41.7**	0.7	1.6	**93**
MD - Elong. @ Max. Load (%) - B	9.49	10.11	9.88	9.95	10.12	**9.91**	0.26	2.59	
MD - Elong. @ Max. Load (%) - E	9.28	9.73	9.59	10.22	10.08	**9.78**	0.38	3.87	**99**
B - Baseline Unexposed									
E - Exposed									

MD - Machine Direction TD - Transverse/Cross Machine Direction

The testing herein is based upon accepted industry practice as well as the test method listed. Test results reported herein do not apply to samples other than those tested.

Table E-3: Laboratory installation damage (ISO/EN 10722) tensile test results for ParaWeb 45

PARAMETER	TEST REPLICATE NUMBER 1	2	3	4	5	MEAN	STD. DEV.	COEF. VARI.	PERCENT RETAINED
Laboratory Installation Damage (ISO/EN 10722)									
Strength Retained measured via wide width tensile (ISO/EN 10319)									
MD - Tensile Strength (lbs) - B	10153	10145	10100	10144	10107	**10130**	24	0	
MD Tensile Strength (kN) - B	45.2	45.1	44.9	45.1	45.0	**45.1**	0.1	0.2	
MD - Tensile Strength (lbs) - E	9726	10017	9618	9958	9958	**9855**	173	2	
MD Tensile Strength (kN) - E	43.3	44.6	42.8	44.3	44.3	**43.9**	0.8	1.8	**97**
MD - Elong. @ Max. Load (%) - B	10.94	11.05	10.95	10.72	11.04	**10.94**	0.13	1.21	
MD - Elong. @ Max. Load (%) - E	10.57	11.12	10.90	11.02	11.07	**10.94**	0.22	2.01	**100**
B - Baseline Unexposed									
E - Exposed									

MD - Machine Direction TD - Transverse/Cross Machine Direction

The testing herein is based upon accepted industry practice as well as the test method listed. Test results reported herein do not apply to samples other than those tested.

Table E-4: Laboratory installation damage (ISO/EN 10722) tensile test results for ParaWeb 50

PARAMETER	TEST REPLICATE NUMBER					MEAN	STD. DEV.	COEF. VARI.	PERCENT RETAINED
	1	2	3	4	5				
Laboratory Installation Damage (ISO/EN 10722)									
Strength Retained measured via wide width tensile (ISO/EN 10319)									
MD - Tensile Strength (lbs) - B	11843	11932	12002	11860	11838	**11895**	71	1	
MD Tensile Strength (kN) - B	52.7	53.1	53.4	52.8	52.7	**52.9**	0.3	0.6	
MD - Tensile Strength (lbs) - E	10992	10616	11045	11077	11124	**10971**	204	2	
MD Tensile Strength (kN) - E	48.9	47.2	49.2	49.3	49.5	**48.8**	0.9	1.9	**92**
MD - Elong. @ Max. Load (%) - B	10.5	10.6	10.8	10.4	10.5	**10.6**	0.2	1.4	
MD - Elong. @ Max. Load (%) - E	9.98	9.30	9.93	10.1	9.78	**9.82**	0.31	3.17	**93**
B - Baseline Unexposed									
E - Exposed									

MD - Machine Direction TD - Transverse/Cross Machine Direction

The testing herein is based upon accepted industry practice as well as the test method listed. Test results reported herein do not apply to samples other than those tested.

Table E-5: Laboratory installation damage (ISO/EN 10722) tensile test results for ParaWeb 54

PARAMETER	TEST REPLICATE NUMBER 1	2	3	4	5	MEAN	STD. DEV.	COEF. VARI.	PERCENT RETAINED
Laboratory Installation Damage (ISO/EN 10722)									
Strength Retained measured via wide width tensile (ISO/EN 10319)									
MD - Tensile Strength (lbs) - B	12622	12588	12572	12553	12661	**12599**	43	0.3	
MD Tensile Strength (kN) - B	56.2	56.0	55.9	55.9	56.3	**56.1**	0.2	0.3	
MD - Tensile Strength (lbs) - E	12452	12170	12568	12504	12595	**12458**	170	1	
MD Tensile Strength (kN) - E	55.4	54.2	55.9	55.6	56.0	**55.4**	0.8	1.4	**99**
MD - Elong. @ Max. Load (%) - B	11.96	11.57	11.92	11.85	11.69	**11.80**	0.16	1.39	
MD - Elong. @ Max. Load (%) - E	11.53	11.04	11.51	11.62	11.54	**11.45**	0.23	2.03	**97**
B - Baseline Unexposed									
E - Exposed									

MD - Machine Direction TD - Transverse/Cross Machine Direction

The testing herein is based upon accepted industry practice as well as the test method listed. Test results reported herein do not apply to samples other than those tested.

Table E-6: Laboratory installation damage (ISO/EN 10722) tensile test results for ParaWeb 63

PARAMETER	TEST REPLICATE NUMBER 1	2	3	4	5	MEAN	STD. DEV.	COEF. VARI.	PERCENT RETAINED
Laboratory Installation Damage (ISO/EN 10722)									
Strength Retained measured via wide width tensile (ISO/EN 10319)									
MD - Tensile Strength (lbs) - B	14534	14538	14453	14633	14485	**14529**	68	0.5	
MD Tensile Strength (kN) - B	64.7	64.7	64.3	65.1	64.5	**64.7**	0.3	0.5	
MD - Tensile Strength (lbs) - E	14493	14334	14326	14339	14541	**14407**	102	1	
MD Tensile Strength (kN) - E	64.5	63.8	63.8	63.8	64.7	**64.1**	0.5	0.7	**99**
MD - Elong. @ Max. Load (%) - B	10.62	10.81	10.36	10.75	10.67	**10.64**	0.17	1.63	
MD - Elong. @ Max. Load (%) - E	10.61	10.49	10.54	10.58	10.79	**10.60**	0.11	1.08	**100**
B - Baseline Unexposed									
E - Exposed									

MD - Machine Direction TD - Transverse/Cross Machine Direction

The testing herein is based upon accepted industry practice as well as the test method listed. Test results reported herein do not apply to samples other than those tested.

Table E-7: Laboratory installation damage (ISO/EN 10722) tensile test results for ParaWeb 75

PARAMETER	TEST REPLICATE NUMBER 1	2	3	4	5	MEAN	STD. DEV.	COEF. VARI.	PERCENT RETAINED
Laboratory Installation Damage (ISO/EN 10722)									
Strength Retained measured via wide width tensile (ISO/EN 10319)									
MD - Tensile Strength (lbs) - B	19325	19446	19351	19384	19381	**19377**	45	0.2	
MD Tensile Strength (kN) - B	86.0	86.5	86.1	86.3	86.2	**86.2**	0.2	0.2	
MD - Tensile Strength (lbs) - E	19281	18985	18950	18746	19078	**19008**	195	1	
MD Tensile Strength (kN) - E	85.8	84.5	84.3	83.4	84.9	**84.6**	0.9	1.0	**98**
MD - Elong. @ Max. Load (%) - B	9.91	10.01	9.96	10.01	10.02	**9.98**	0.05	0.47	
MD - Elong. @ Max. Load (%) - E	9.91	9.99	9.97	10.19	10.02	**10.02**	0.11	1.05	**100**
B - Baseline Unexposed									
E - Exposed									

MD - Machine Direction TD - Transverse/Cross Machine Direction

The testing herein is based upon accepted industry practice as well as the test method listed. Test results reported herein do not apply to samples other than those tested.

Table E-8: Laboratory installation damage (ISO/EN 10722) tensile test results for ParaWeb 100

PARAMETER	TEST REPLICATE NUMBER 1	2	3	4	5	MEAN	STD. DEV.	COEF. VARI.	PERCENT RETAINED
Laboratory Installation Damage (ISO/EN 10722)									
Strength Retained measured via wide width tensile (ISO/EN 10319)									
MD - Tensile Strength (lbs) - B	25031	24397	24678	24403	24726	**24647**	263	1	
MD Tensile Strength (kN) - B	111.4	108.6	109.8	108.6	110.0	**109.7**	1.2	1.1	
MD - Tensile Strength (lbs) - E	24700	24773	24521	24669	24602	**24653**	96	0.4	
MD Tensile Strength (kN) - E	109.9	110.2	109.1	109.8	109.5	**109.7**	0.4	0.4	**100**
MD - Elong. @ Max. Load (%) - B	10.44	10.11	10.09	9.96	10.03	**10.13**	0.19	1.83	
MD - Elong. @ Max. Load (%) - E	10.36	10.27	9.88	10.44	9.88	**10.17**	0.27	2.64	**100**
B - Baseline Unexposed									
E - Exposed									

MD - Machine Direction TD - Transverse/Cross Machine Direction

The testing herein is based upon accepted industry practice as well as the test method listed. Test results reported herein do not apply to samples other than those tested.

Table E-9: Laboratory installation damage (ISO/EN 10722) tensile test results for ParaWeb 135

PARAMETER	TEST REPLICATE NUMBER 1	2	3	4	5	MEAN	STD. DEV.	COEF. VARI.	PERCENT RETAINED
Laboratory Installation Damage (ISO/EN 10722)									
Strength Retained measured via wide width tensile (ISO/EN 10319)									
MD - Tensile Strength (lbs) - B	35254	35186	35519	35502	35208	**35334**	163	0.5	
MD Tensile Strength (kN) - B	157	157	158	158	157	**157**	1	0.5	
MD - Tensile Strength (lbs) - E	35429	35237	35367	35190	35401	**35325**	105	0.3	
MD Tensile Strength (kN) - E	158	157	157	157	158	**157**	0	0.3	**100**
MD - Elong. @ Max. Load (%) - B	11.8	11.7	11.5	11.8	11.4	**11.6**	0.2	1.6	
MD - Elong. @ Max. Load (%) - E	11.7	11.7	11.1	11.7	11.9	**11.6**	0.3	2.6	**100**
B - Baseline Unexposed									
E - Exposed									

MD - Machine Direction TD - Transverse/Cross Machine Direction

The testing herein is based upon accepted industry practice as well as the test method listed. Test results reported herein do not apply to samples other than those tested.

Table E-10: Laboratory installation damage (ISO/EN 10722) tensile test results for ParaLink 300

PARAMETER	TEST REPLICATE NUMBER 1	2	3	4	5	MEAN	STD. DEV.	COEF. VARI.	PERCENT RETAINED
Laboratory Installation Damage (ISO/EN 10722)									
Strength Retained measured via wide width tensile (ISO/EN 10319)									
MD Number of Ribs per Specimen:	1								
MD Number of Ribs per foot:	1.72								
MD - Tensile Strength (lbs) - B	12595	12516	12561	12599	12735	**12601**	82	1	
MD Tensile Strength (lbs/ft) - B	21647	21511	21588	21654	21887	**21657**	141	1	
MD Tensile Strength (kN/m) - B	316	314	315	316	320	**316**	2	1	
MD - Tensile Strength (lbs) - E	12234	11963	12004	12569	12425	**12239**	262	2	
MD Tensile Strength (lbs/ft) - E	21026	20560	20631	21602	21354	**21035**	451	2	**97**
MD Tensile Strength (kN/m) - E	307	300	301	315	312	**307**	7	2	
MD - Elong. @ Max. Load (%) - B	11.1	10.7	9.89	10.1	10.0	**10.4**	0.5	5.0	
MD - Elong. @ Max. Load (%) - E	9.43	9.45	8.81	11.2	11.2	**10.0**	1.1	11.1	**97**
B - Baseline Unexposed									
E - Exposed									

MD - Machine Direction TD - Transverse/Cross Machine Direction

The testing herein is based upon accepted industry practice as well as the test method listed. Test results reported herein do not apply to samples other than those tested.

Table E-11: Laboratory installation damage (ISO/EN 10722) tensile test results for ParaLink 400

PARAMETER	TEST REPLICATE NUMBER 1	2	3	4	5	MEAN	STD. DEV.	COEF. VARI.	PERCENT RETAINED
Laboratory Installation Damage (ISO/EN 10722)									
Strength Retained measured via wide width tensile (ISO/EN 10319)									
MD Number of Ribs per Specimen:	1								
MD Number of Ribs per foot:	1.70								
MD - Tensile Strength (lbs) - B	17072	17040	17036	17067	16942	**17031**	52	0.3	
MD Tensile Strength (lbs/ft) - B	29081	29026	29020	29072	28859	**29011**	89	0.3	
MD Tensile Strength (kN/m) - B	425	424	424	424	421	**424**	1	0.3	
MD - Tensile Strength (lbs) - E	16525	16146	16568	16476	16219	**16387**	191	1	
MD Tensile Strength (lbs/ft) - E	28149	27503	28223	28066	27627	**27914**	326	1	**96**
MD Tensile Strength (kN/m) - E	411	402	412	410	403	**408**	5	1	
MD - Elong. @ Max. Load (%) - B	9.96	9.19	9.24	10.85	10.48	**9.94**	0.74	7.41	
MD - Elong. @ Max. Load (%) - E	9.54	7.94	8.75	8.69	8.38	**8.66**	0.59	6.78	**87**
B - Baseline Unexposed									
E - Exposed									

MD - Machine Direction TD - Transverse/Cross Machine Direction

The testing herein is based upon accepted industry practice as well as the test method listed. Test results reported herein do not apply to samples other than those tested.

Table E-12: Laboratory installation damage (ISO/EN 10722) tensile test results for ParaLink 500

PARAMETER	TEST REPLICATE NUMBER 1	2	3	4	5	MEAN	STD. DEV.	COEF. VARI.	PERCENT RETAINED
Laboratory Installation Damage (ISO/EN 10722)									
Strength Retained measured via wide width tensile (ISO/EN 10319)									
MD Number of Ribs per Specimen:	1								
MD Number of Ribs per foot:	1.71								
MD - Tensile Strength (lbs) - B	22056	22226	21972	21878	21968	**22020**	131	1	
MD Tensile Strength (lbs/ft) - B	37810	38102	37666	37506	37659	**37749**	225	1	
MD Tensile Strength (kN/m) - B	552	556	550	548	550	**551**	3	1	
MD - Tensile Strength (lbs) - E	22011	21942	21972	21793	21878	**21919**	85	0.4	
MD Tensile Strength (lbs/ft) - E	37733	37615	37665	37360	37506	**37576**	146	0.4	**100**
MD Tensile Strength (kN/m) - E	551	549	550	545	548	**549**	2	0.4	
MD - Elong. @ Max. Load (%) - B	10.63	11.56	10.65	10.50	10.57	**10.78**	0.44	4.07	
MD - Elong. @ Max. Load (%) - E	10.14	9.95	10.34	10.58	10.33	**10.27**	0.24	2.30	**95**
B - Baseline Unexposed									
E - Exposed									

MD - Machine Direction TD - Transverse/Cross Machine Direction

The testing herein is based upon accepted industry practice as well as the test method listed. Test results reported herein do not apply to samples other than those tested.

Table E-13: Laboratory installation damage (ISO/EN 10722) tensile test results for ParaLink 600

PARAMETER	TEST REPLICATE NUMBER 1	2	3	4	5	MEAN	STD. DEV.	COEF. VARI.	PERCENT RETAINED
Laboratory Installation Damage (ISO/EN 10722)									
Strength Retained measured via wide width tensile (ISO/EN 10319)									
MD Number of Ribs per Specimen:	1								
MD Number of Ribs per foot:	1.71								
MD - Tensile Strength (lbs) - B	26340	26060	26019	26152	26330	**26180**	150	1	
MD Tensile Strength (lbs/ft) - B	45155	44674	44603	44831	45137	**44880**	256	1	
MD Tensile Strength (kN/m) - B	659	652	651	655	659	**655**	4	1	
MD - Tensile Strength (lbs) - E	26479	26142	26119	26369	26180	**26258**	158	1	
MD Tensile Strength (lbs/ft) - E	45392	44814	44775	45203	44880	**45013**	271	1	**100**
MD Tensile Strength (kN/m) - E	663	654	654	660	655	**657**	4	1	
MD - Elong. @ Max. Load (%) - B	10.28	9.66	9.71	9.74	10.13	**9.90**	0.28	2.84	
MD - Elong. @ Max. Load (%) - E	9.92	9.43	9.95	10.28	9.62	**9.84**	0.33	3.33	**99**

B - Baseline Unexposed
E - Exposed

MD - Machine Direction TD - Transverse/Cross Machine Direction

The testing herein is based upon accepted industry practice as well as the test method listed. Test results reported herein do not apply to samples other than those tested.

Table E-14: Laboratory installation damage (ISO/EN 10722) tensile test results for ParaLink 700

PARAMETER	TEST REPLICATE NUMBER 1	2	3	4	5	MEAN	STD. DEV.	COEF. VARI.	PERCENT RETAINED
Laboratory Installation Damage (ISO/EN 10722)									
Strength Retained measured via wide width tensile (ISO/EN 10319)									
MD Number of Ribs per Specimen:	1								
MD Number of Ribs per foot:	1.71								
MD - Tensile Strength (lbs) - B	31187	31563	31857	31520	31866	**31577**	256	1	
MD Tensile Strength (lbs/ft) - B	53464	54107	54612	54035	54628	**54169**	481	1	
MD Tensile Strength (kN/m) - B	781	790	797	789	798	**791**	7	1	
MD - Tensile Strength (lbs) - E	31167	31726	31647	31546	31674	**31552**	225	1	
MD Tensile Strength (lbs/ft) - E	53430	54387	54251	54079	54298	**54089**	385	1	**100**
MD Tensile Strength (kN/m) - E	780	794	792	790	793	**790**	6	1	
MD - Elong. @ Max. Load (%) - B	10.79	10.52	11.19	10.50	10.85	**10.77**	0.28	2.62	
MD - Elong. @ Max. Load (%) - E	10.79	10.84	11.02	10.82	10.53	**10.80**	0.18	1.63	**100**
B - Baseline Unexposed									
E - Exposed									

MD - Machine Direction TD - Transverse/Cross Machine Direction

The testing herein is based upon accepted industry practice as well as the test method listed. Test results reported herein do not apply to samples other than those tested.

Table E-15: Laboratory installation damage (ISO/EN 10722) tensile test results for ParaLink 800

PARAMETER	TEST REPLICATE NUMBER 1	2	3	4	5	MEAN	STD. DEV.	COEF. VARI.	PERCENT RETAINED
Laboratory Installation Damage (ISO/EN 10722)									
Strength Retained measured via wide width tensile (ISO/EN 10319)									
MD Number of Ribs per Specimen:	1								
MD Number of Ribs per foot:	2.07								
MD - Tensile Strength (lbs) - B	29727	29751	29721	29884	29756	**29768**	67	0.2	
MD Tensile Strength (lbs/ft) - B	61460	61510	61448	61785	61519	**61544**	138	0.2	
MD Tensile Strength (kN/m) - B	897	898	897	902	898	**899**	2	0.2	
MD - Tensile Strength (lbs) - E	29619	29856	29725	29897	29809	**29781**	111	0.4	
MD Tensile Strength (lbs/ft) - E	61237	61726	61456	61812	61629	**61572**	230	0.4	**100**
MD Tensile Strength (kN/m) - E	894	901	897	902	900	**899**	3	0.4	
MD - Elong. @ Max. Load (%) - B	10.84	11.68	11.16	11.71	11.55	**11.39**	0.38	3.31	
MD - Elong. @ Max. Load (%) - E	10.69	11.06	10.80	10.98	10.90	**10.89**	0.15	1.34	**96**

B - Baseline Unexposed
E - Exposed

MD - Machine Direction TD - Transverse/Cross Machine Direction

The testing herein is based upon accepted industry practice as well as the test method listed. Test results reported herein do not apply to samples other than those tested.

Table E-16: Laboratory installation damage (ISO/EN 10722) tensile test results for ParaLink 1000

PARAMETER	TEST REPLICATE NUMBER 1	2	3	4	5	MEAN	STD. DEV.	COEF. VARI.	PERCENT RETAINED
Laboratory Installation Damage (ISO/EN 10722)									
Strength Retained measured via wide width tensile (ISO/EN 10319)									
MD Number of Ribs per Specimen:	1								
MD Number of Ribs per foot:	2.51								
MD - Tensile Strength (lbs) - B	28726	28799	29034	29319	29341	**29044**	285	1	
MD Tensile Strength (lbs/ft) - B	72115	72299	72889	73604	73659	**72913**	716	1	
MD Tensile Strength (kN/m) - B	1053	1056	1064	1075	1075	**1065**	10	1	
MD - Tensile Strength (lbs) - E	28765	27778	28758	28934	27634	**28374**	616	2	
MD Tensile Strength (lbs/ft) - E	72213	69736	72196	72638	69374	**71231**	1546	2	**98**
MD Tensile Strength (kN/m) - E	1054	1018	1054	1061	1013	**1040**	23	2	
MD - Elong. @ Max. Load (%) - B	10.9	11.2	10.9	11.0	11.3	**11.1**	0.2	1.6	
MD - Elong. @ Max. Load (%) - E	10.6	10.6	10.6	11.1	10.6	**10.7**	0.2	2.1	**97**

B - Baseline Unexposed
E - Exposed

MD - Machine Direction TD - Transverse/Cross Machine Direction

The testing herein is based upon accepted industry practice as well as the test method listed. Test results reported herein do not apply to samples other than those tested.

Table E-17: Laboratory installation damage (ISO/EN 10722) tensile test results for ParaLink 1200

PARAMETER	TEST REPLICATE NUMBER 1	2	3	4	5	MEAN	STD. DEV.	COEF. VARI.	PERCENT RETAINED
Laboratory Installation Damage (ISO/EN 10722)									
Strength Retained measured via wide width tensile (ISO/EN 10319)									
MD Number of Ribs per Specimen:	1								
MD Number of Ribs per foot:	3.11								
MD - Tensile Strength (lbs) - B	29651	29829	29743	29743	29678	**29729**	69	0.2	
MD Tensile Strength (lbs/ft) - B	92093	92646	92380	92378	92175	**92334**	215	0.2	
MD Tensile Strength (kN/m) - B	1345	1353	1349	1349	1346	**1348**	3	0.2	
MD - Tensile Strength (lbs) - E	29800	29689	29660	29850	29747	**29749**	78	0.3	
MD Tensile Strength (lbs/ft) - E	92555	92212	92120	92711	92391	**92398**	242	0.3	**100**
MD Tensile Strength (kN/m) - E	1351	1346	1345	1354	1349	**1349**	4	0.3	
MD - Elong. @ Max. Load (%) - B	11.07	10.95	10.62	10.56	10.73	**10.79**	0.22	2.02	
MD - Elong. @ Max. Load (%) - E	10.50	10.80	10.63	10.34	10.57	**10.57**	0.17	1.60	**98**
B - Baseline Unexposed									
E - Exposed									

MD - Machine Direction TD - Transverse/Cross Machine Direction

The testing herein is based upon accepted industry practice as well as the test method listed. Test results reported herein do not apply to samples other than those tested.

Table E-18: Laboratory installation damage (ISO/EN 10722) tensile test results for ParaLink 1500

PARAMETER	TEST REPLICATE NUMBER 1	2	3	4	5	MEAN	STD. DEV.	COEF. VARI.	PERCENT RETAINED
Laboratory Installation Damage (ISO/EN 10722)									
Strength Retained measured via wide width tensile (ISO/EN 10319)									
MD Number of Ribs per Specimen:	1								
MD Number of Ribs per foot:	3.08								
MD - Tensile Strength (lbs) - B	35644	35878	35755	35998	35537	**35762**	183	1	
MD Tensile Strength (lbs/ft) - B	109875	110597	110216	110967	109545	**110240**	564	1	
MD Tensile Strength (kN/m) - B	1604	1615	1609	1620	1599	**1610**	8	1	
MD - Tensile Strength (lbs) - E	35618	35843	35595	35513	35801	**35674**	142	0.4	
MD Tensile Strength (lbs/ft) - E	109795	110490	109725	109471	110360	**109968**	437	0.4	**100**
MD Tensile Strength (kN/m) - E	1603	1613	1602	1598	1611	**1606**	6	0.4	
MD - Elong. @ Max. Load (%) - B	10.63	11.28	10.83	11.27	10.79	**10.96**	0.30	2.71	
MD - Elong. @ Max. Load (%) - E	10.50	10.69	10.47	10.54	10.95	**10.63**	0.20	1.86	**97**

B - Baseline Unexposed
E - Exposed

MD - Machine Direction TD - Transverse/Cross Machine Direction

The testing herein is based upon accepted industry practice as well as the test method listed. Test results reported herein do not apply to samples other than those tested.

Appendix F: Creep Rupture Detailed Test Results

Table F-1: Explanation/Key for Individual Creep Test Data Tables/Figures

Accelerated Creep Rupture via SIM - ASTM D 6992

Spreadsheet Filename

SUMMARY CREEP PARAMETERS: NTPEP - Manufacturer Product

Specimen: Test Filename Test Date: 01-Jan-07 Method: SIM (10^4s, 14C),single rib, machine dir.

Average Creep Stress: 65.0 kN/m %UTS: 66.00

Ultimate Tensile Strength: 100.0 kN/m Rupture: YES

Dwell Seq	t'	t	$(t-t')_i$	Vshift(%)	$logA_T$	Temp	$logA_T/T$
1	0	0.5	0.5	-	-	20.00	-
2	9500	10000	500	0.1	1.2600	34.00	0.0900
3	19500	20000	500	0.1	1.2600	48.00	0.0900
4	29500	30000	500	0.1	1.2600	62.00	0.0900
5	39500	40000	500	0.1	1.2600	76.00	0.0900
6	49500	50000	500	0.1	1.2600	90.00	0.0900

Summary	Initial	Final	Units	@20C refT	AVG	0.0900
lab time	90	60000	sec	-		
$logA_T(t-t')$	1.9542	4.7782	log hours	6.0000		
$A_T(t-t')$	-	17.25	years	114.00		
Strain	9.500	12.500	%	-		
Modulus	800.0	600.0	kN/m	-		

$logA_T/T$ = Horizontal shift factor for each temperature step expressed per degree C

Average temperature for each step

$logA_T$ = Horizontal shift factor for each temperature step

Vshift(%) = Vertical shift to offset system temperature expansion

Rupture Time expressed in log hours and years

% Strain and Creep Modulus at end of test

% Strain and Creep Modulus at onset of creep

t = The actual start time of each temperature step

t' = The theoritical start time of each temperature step

Accelerated Creep Rupture via SIM - ASTM D 6992

SUMMARY CREEP PARAMETERS: NTPEP - Linear Composites
ParaWeb 30

Specimen: 27063n2l2-pw30-sim1 Test Date: July 2017 Method: SIM (10^4s, 14C),strapping

Average Creep Stress: 4797.6 lb/rib %UTS: 70.00

Ultimate Tensile Strength: 6853.7 lb/rib Rupture: YES

Dwell Seq	t'	t	$(t-t')_i$	Vshift(%)	$\log A_T$	Temp	$\log A_T/T$
1	0	0.5	0.5	-	-	19.9	-
2	9500	10019	519	0.1	1.2844	34.1	0.0908
3	19500	20009	509	0.11	1.3136	48.4	0.0917
4	29500	29999	499	0.12	1.3218	62.7	0.0925
5	39500	39989	489	0.15	1.3302	77.0	0.0928
6	49400	49979	579	0.1	1.2564	91.7	0.0858
						AVG	0.0907

Summary	Initial	Final	Units	@20C refT
lab time	47	59939	sec	-
$\log A_T(t-t')$	1.6721	10.5291	log hours	6.9671
$A_T(t-t')$	-	1071.60	years	1057.61
Strain	6.236	12.219	%	-
Modulus	66944.6	39263.1	lb/rib	-

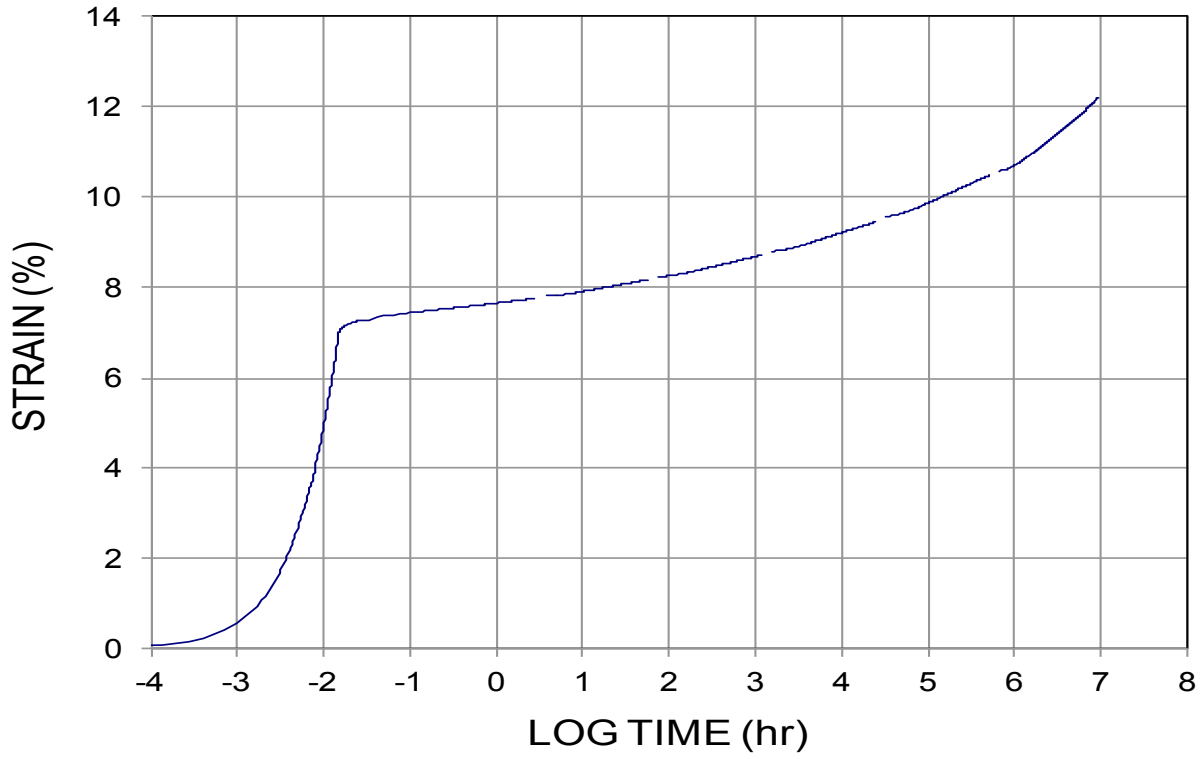

Figure F-1. SIM/Creep data/curve for ParaWeb 30 at load level of 70.00% UTS.

Accelerated Creep Rupture via SIM - ASTM D 6992

SUMMARY CREEP PARAMETERS: NTPEP - Linear Composites
ParaWeb 30

Specimen: 27063n2l2-pw30-sim1 Test Date: July 2017 Method: SIM (10^4s, 14C),strapping

Average Creep Stress: 5140.2 lb/rib %UTS: 75.00

Ultimate Tensile Strength: 6853.7 lb/rib Rupture: YES

Dwell Seq	t'	t	$(t-t')_i$	Vshift(%)	$logA_T$	Temp	$logA_T/T$
1	0	0.5	0.5	-	-	19.9	-
2	9400	10019	619	0.1	1.2078	34.1	0.0854
3	19400	20009	609	0.11	1.2398	48.4	0.0865
4	29400	29999	599	0.12	1.2466	62.7	0.0872
5	39300	39989	689	0.15	1.1854	77.0	0.0827
6	49100	49979	879	0.15	1.0833	91.7	0.0738
						AVG	0.0831

Summary	Initial	Final	Units	@20C refT
lab time	51.5	51419	sec	-
$logA_T(t-t')$	1.7118	9.3283	log hours	5.7666
$A_T(t-t')$	-	67.48	years	66.65
Strain	7.417	16.079	%	-
Modulus	70050.4	31985.1	lb/rib	-

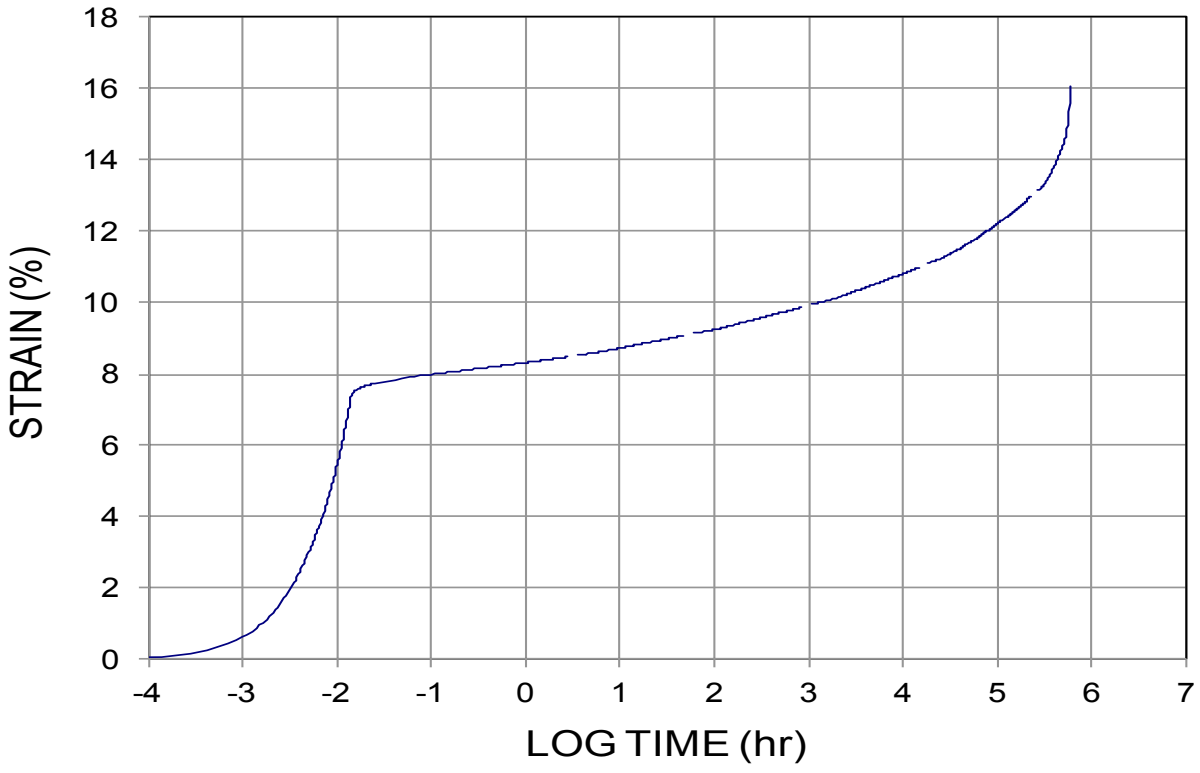

Figure F-2. SIM/Creep data/curve for ParaWeb 30 at load level of 75.00% UTS.

Accelerated Creep Rupture via SIM - ASTM D 6992

SUMMARY CREEP PARAMETERS: NTPEP - Linear Composites
ParaWeb 30

Specimen: 27063n2l2-pw30-sim Test Date: May 2017 Method: SIM (10^4s, 14C),strapping

Average Creep Stress: 5482.8 lb/rib %UTS: 80.00

Ultimate Tensile Strength: 6853.7 lb/rib Rupture: YES

Dwell Seq	t'	t	$(t-t')_i$	Vshift(%)	$\log A_T$	Temp	$\log A_T/T$
1	0	0.5	0.5	-	-	19.9	-
2	9500	10019	519	0.1	1.2844	34.1	0.0908
3	19500	20009	509	0.12	1.3136	48.4	0.0917
4	29400	29999	599	0.14	1.2425	62.6	0.0875
5							
6							

AVG 0.0900

Summary	Initial	Final	Units	@20C refT
lab time	66	31679	sec	-
$\log A_T(t-t')$	1.8195	7.1982	log hours	3.6362
$A_T(t-t')$	-	0.50	years	0.49
Strain	8.05	14.57	%	-
Modulus	68519.5	37238.0	lb/rib	-

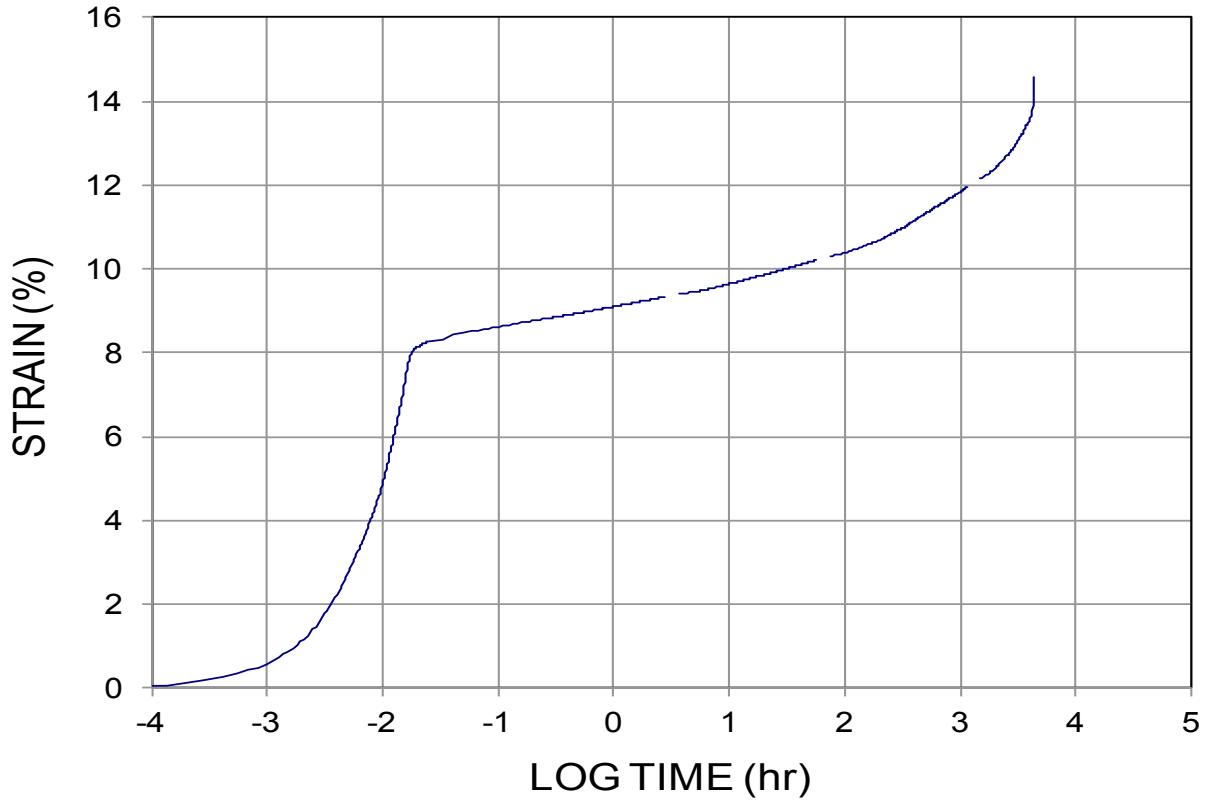

Figure F-3. SIM/Creep data/curve for ParaWeb 30 at load level of 80.00% UTS.

Accelerated Creep Rupture via SIM - ASTM D 6992

SUMMARY CREEP PARAMETERS: NTPEP - Linear Composites
ParaWeb 30

Specimen: 27063n2l2-pw30-sim Test Date: July 2017 Method: SIM (10^4s, 14C),strapping

Average Creep Stress: 5825.5 lb/rib %UTS: 85.00

Ultimate Tensile Strength: 6853.7 lb/rib Rupture: YES

Dwell Seq	t'	t	$(t-t')_i$	Vshift(%)	$\log A_T$	Temp	$\log A_T/T$
1	0	0.5	0.5	-	-	19.9	-
2	9500	10019	519	0.1	1.2844	34.1	0.0908
3	19200	20009	809	0.11	1.1124	48.7	0.0762
4							
5							
6							

AVG 0.0834

Summary	Initial	Final	Units	@20C refT
lab time	66	21389	sec	-
$\log A_T(t-t')$	1.8195	5.7370	log hours	2.1750
$A_T(t-t')$	-	0.02	years	0.02
Strain	8.38	13.651	%	-
Modulus	70041.1	42667.0	lb/rib	-

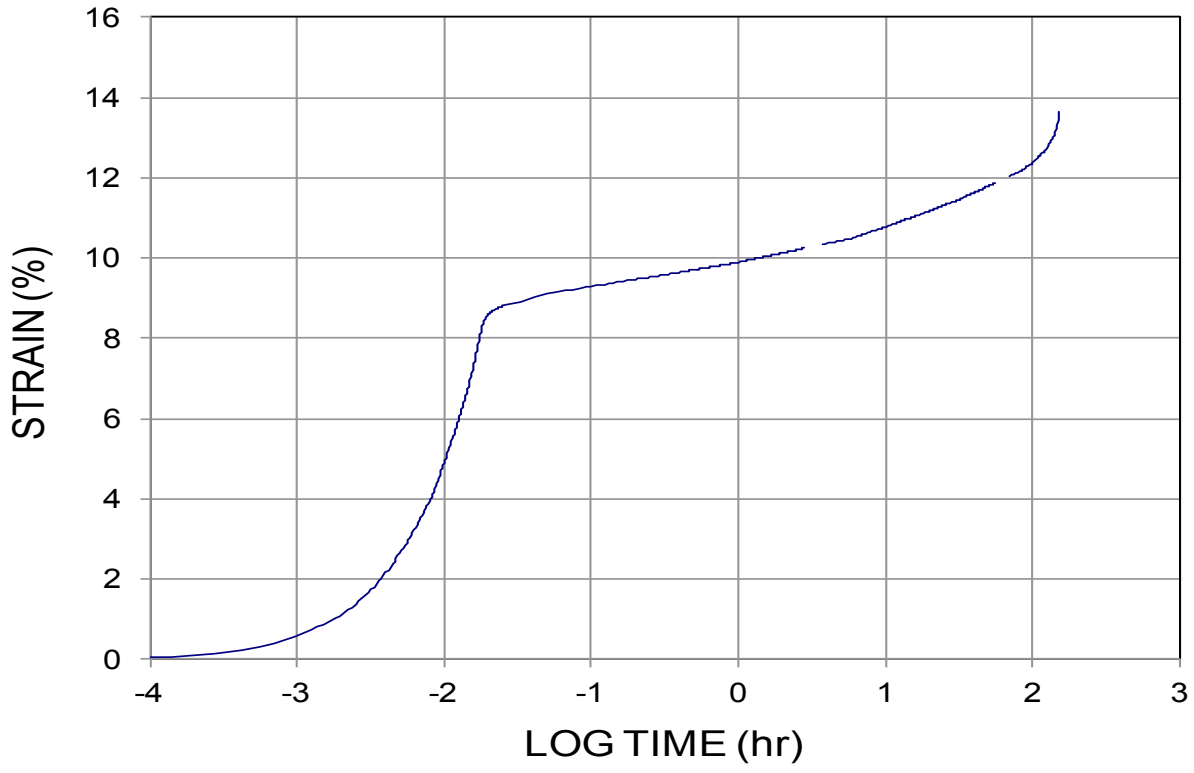

Figure F-4. SIM/Creep data/curve for ParaWeb 30 at load level of 85.00% UTS.

Accelerated Creep Rupture via SIM - ASTM D 6992

SUMMARY CREEP PARAMETERS: NTPEP - Linear Composites
ParaWeb 50

Specimen: 27063n2l2-pw50-sim1 Test Date: April 2017 Method: SIM (10^4s, 14C),strapping

Average Creep Stress: 8132.2 lb/rib %UTS: 70.00

Ultimate Tensile Strength: 11617.5 lb/rib Rupture: YES

Dwell Seq	t'	t	$(t-t')_i$	Vshift(%)	$\log A_T$	Temp	$\log A_T/T$
1	0	0.5	0.5	-	-	19.9	-
2	9500	10019	519	0.1	1.2844	34.1	0.0908
3	19500	20009	509	0.12	1.3136	48.4	0.0917
4	29500	29999	499	0.14	1.3218	62.7	0.0925
5	39500	39989	489	0.15	1.3302	77.0	0.0928
6	49500	49979	479	0.17	1.3387	91.7	0.0914

AVG 0.0918

Summary	Initial	Final	Units	@20C refT
lab time	46.5	59939	sec	-
$\log A_T(t-t')$	1.6675	10.6073	log hours	7.0453
$A_T(t-t')$	-	1283.03	years	1266.27
Strain	7.131	14.217	%	-
Modulus	116648.8	57197.2	lb/rib	-

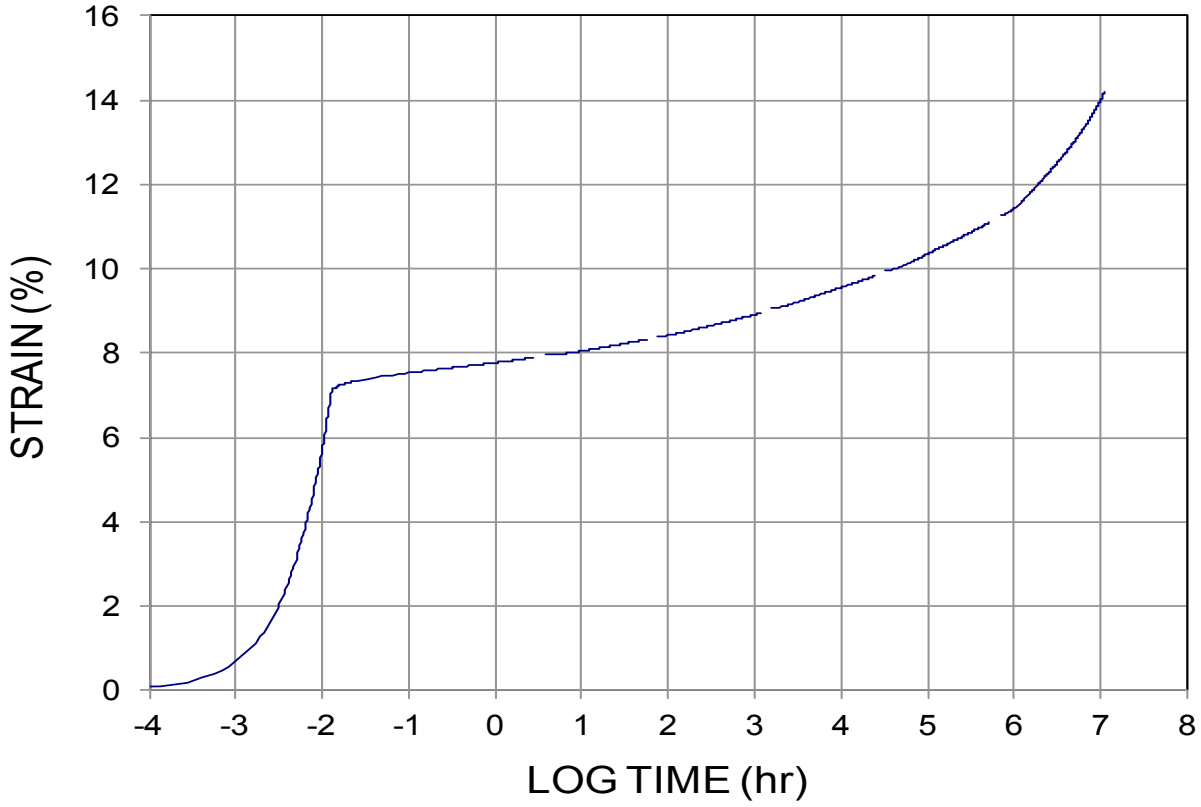

Figure F-5. SIM/Creep data/curve for ParaWeb 50 at load level of 70.00% UTS.

Accelerated Creep Rupture via SIM - ASTM D 6992

SUMMARY CREEP PARAMETERS: NTPEP - Linear Composites
ParaWeb 50

Specimen: 27063n2l2-pw50-sim1 Test Date: April 2017 Method: SIM (10^4s, 14C),strapping

Average Creep Stress: 8132.2 lb/rib %UTS: 70.00

Ultimate Tensile Strength: 11617.5 lb/rib Rupture: YES

Dwell Seq	t'	t	$(t-t')_i$	Vshift(%)	$\log A_T$	Temp	$\log A_T/T$
1	0	0.5	0.5	-	-	19.9	-
2	9500	10019	519	0.13	1.2844	34.1	0.0908
3	19500	20009	509	0.16	1.3136	48.4	0.0917
4	29500	29999	499	0.14	1.3218	62.7	0.0925
5	39500	39989	489	0.15	1.3302	77.0	0.0928
6	49500	49979	479	0.17	1.3387	91.8	0.0910

AVG 0.0917

Summary	Initial	Final	Units	@20C refT
lab time	45.5	51479	sec	-
$\log A_T(t-t')$	1.6580	9.8851	log hours	6.3231
$A_T(t-t')$	-	243.23	years	240.06
Strain	7.022	11.107	%	-
Modulus	118501.3	73211.5	lb/rib	-

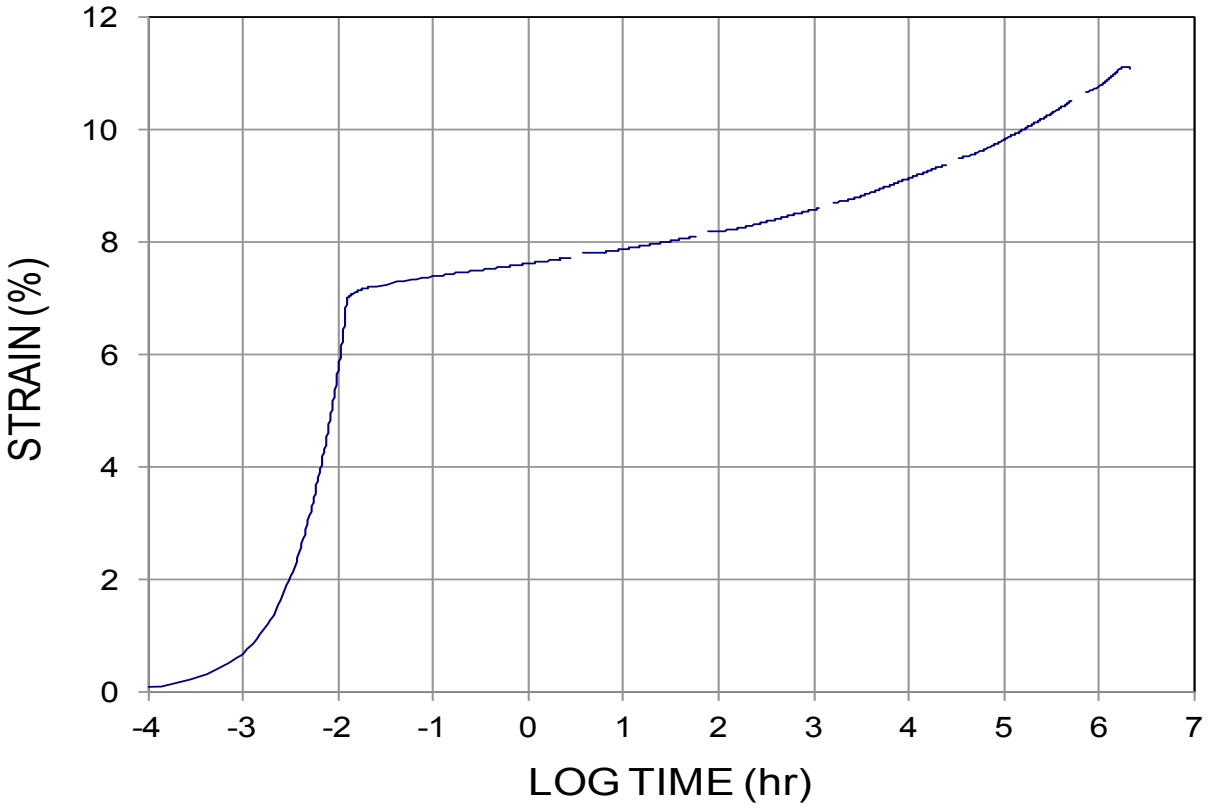

Figure F-6. SIM/Creep data/curve for ParaWeb 50 at load level of 70.00% UTS.

Accelerated Creep Rupture via SIM - ASTM D 6992

SUMMARY CREEP PARAMETERS: NTPEP - Linear Composites
ParaWeb 50

Specimen: 27063n2l2-pw50-sim1 Test Date: April 2017 Method: SIM (10^4s, 14C),strapping

Average Creep Stress: 8480.6 lb/rib %UTS: 73.00

Ultimate Tensile Strength: 11617.5 lb/rib Rupture: YES

Dwell Seq	t'	t	$(t-t')_i$	Vshift(%)	$\log A_T$	Temp	$\log A_T/T$
1	0	0.5	0.5	-	-	19.9	-
2	9500	10019	519	0.1	1.2844	34.1	0.0908
3	19500	20009	509	0.13	1.3136	48.4	0.0917
4	29500	29999	499	0.14	1.3218	62.7	0.0925
5	39400	39989	589	0.15	1.2494	77.0	0.0871
6	49200	49979	779	0.17	1.1317	91.7	0.0772
						AVG	0.0878

Summary	Initial	Final	Units	@20C refT
lab time	51.5	53999	sec	-
$\log A_T(t-t')$	1.7118	9.9820	log hours	6.4199
$A_T(t-t')$	-	303.99	years	300.02
Strain	7.311	15.304	%	-
Modulus	118363.0	55412.7	lb/rib	-

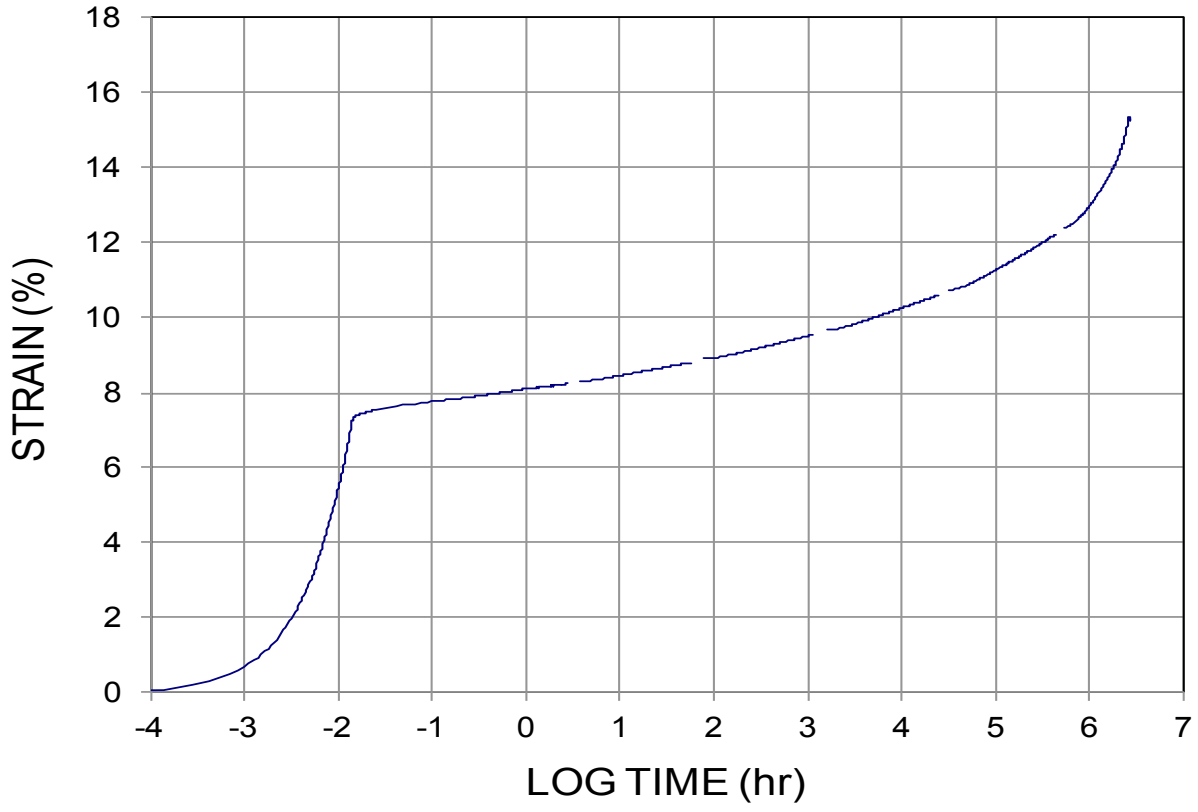

Figure F-7. SIM/Creep data/curve for ParaWeb 50 at load level of 73.00% UTS.

Accelerated Creep Rupture via SIM - ASTM D 6992

SUMMARY CREEP PARAMETERS: NTPEP - Linear Composites
ParaWeb 50

Specimen: 27063n2l2-pw50-sim1 Test Date: April 2017 Method: SIM (10^4s, 14C),strapping

Average Creep Stress: 8480.7 lb/rib %UTS: 73.00

Ultimate Tensile Strength: 11617.5 lb/rib Rupture: YES

Dwell Seq	t'	t	$(t-t')_i$	Vshift(%)	$\log A_T$	Temp	$\log A_T/T$
1	0	0.5	0.5	-	-	19.9	-
2	9500	10019	519	0.1	1.2844	34.1	0.0908
3	19500	20009	509	0.12	1.3136	48.4	0.0917
4	29500	29999	499	0.14	1.3218	62.7	0.0925
5	39400	39989	589	0.13	1.2494	77.0	0.0871
6	49300	49979	679	0.17	1.1913	91.8	0.0808

AVG 0.0885

Summary	Initial	Final	Units	@20C refT
lab time	53.5	51569	sec	-
$\log A_T(t-t')$	1.7284	9.7163	log hours	6.1543
$A_T(t-t')$	-	164.90	years	162.74
Strain	7.506	15.413	%	-
Modulus	115297.5	55020.7	lb/rib	-

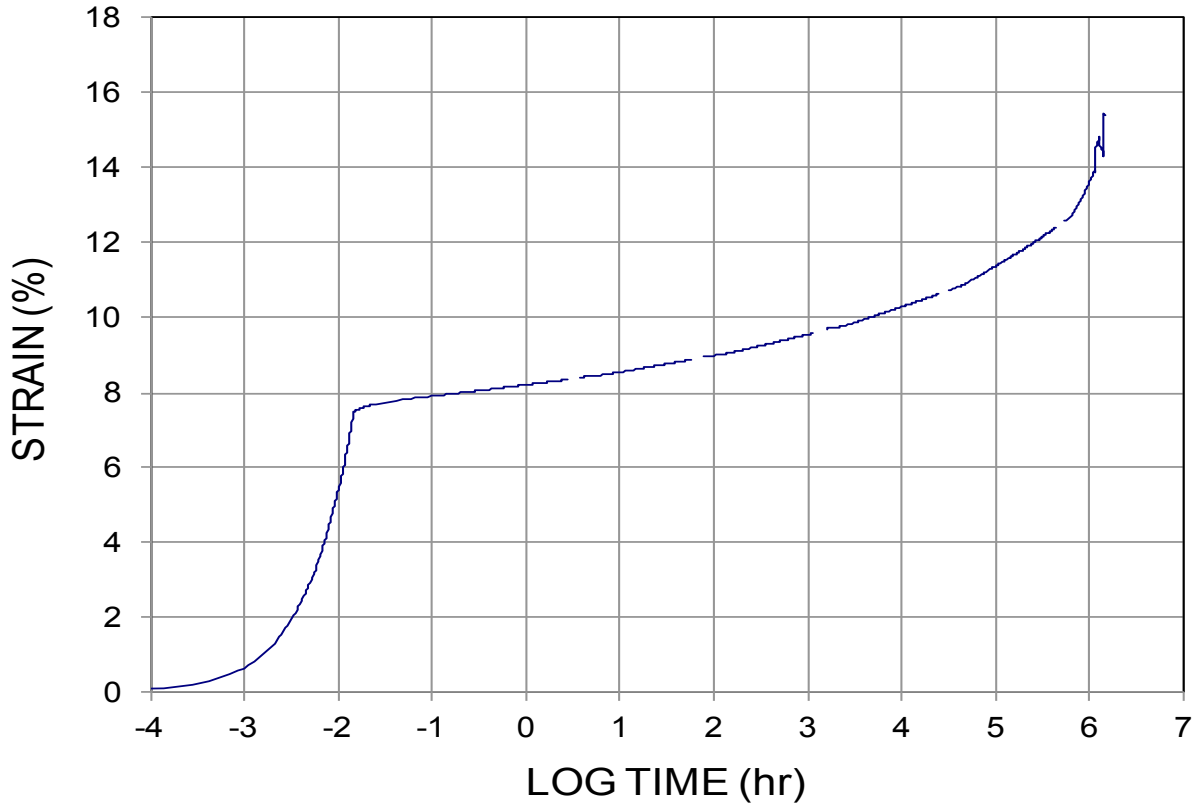

Figure F-8. SIM/Creep data/curve for ParaWeb 50 at load level of 73.00% UTS.

Accelerated Creep Rupture via SIM - ASTM D 6992

SUMMARY CREEP PARAMETERS: NTPEP - Linear Composites
ParaWeb 50

Specimen: 27063n2l2-pw50-sim1 Test Date: April 2017 Method: SIM (10^4s, 14C),strapping

Average Creep Stress: 8829.2 lb/rib %UTS: 76.00

Ultimate Tensile Strength: 11617.5 lb/rib Rupture: YES

Dwell Seq	t'	t	$(t-t')_i$	Vshift(%)	$\log A_T$	Temp	$\log A_T/T$
1	0	0.5	0.5	-	-	19.9	-
2	9500	10019	519	0.11	1.2844	34.1	0.0908
3	19500	20009	509	0.12	1.3136	48.4	0.0917
4	29300	29999	699	0.14	1.1754	62.7	0.0822
5	39400	39989	589	0.13	1.2576	77.0	0.0878
6							

AVG 0.0881

Summary	Initial	Final	Units	@20C refT
lab time	50.5	46079	sec	-
$\log A_T(t-t')$	1.7033	8.8557	log hours	5.2937
$A_T(t-t')$	-	22.73	years	22.43
Strain	7.433	14.965	%	-
Modulus	121086.7	58999.6	lb/rib	-

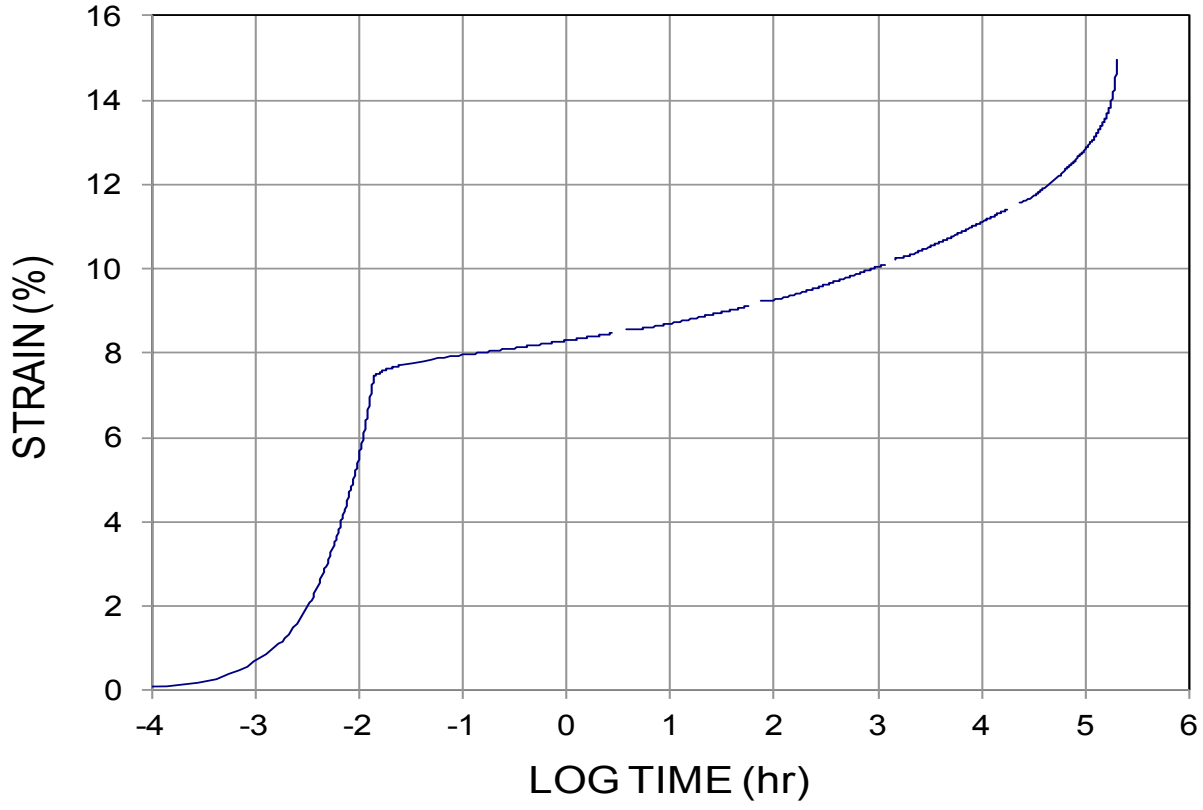

Figure F-9. SIM/Creep data/curve for ParaWeb 50 at load level of 76.00% UTS.

Accelerated Creep Rupture via SIM - ASTM D 6992

SUMMARY CREEP PARAMETERS: NTPEP - Linear Composites
ParaWeb 50

Specimen: 27063n2l2-pw50-sim1 Test Date: April 2017 Method: SIM (10^4s, 14C),strapping

Average Creep Stress: 8829.2 lb/rib %UTS: 76.00

Ultimate Tensile Strength: 11617.5 lb/rib Rupture: YES

Dwell Seq	t'	t	$(t-t')_i$	Vshift(%)	$\log A_T$	Temp	$\log A_T/T$
1	0	0.5	0.5	-	-	19.9	-
2	9500	10019	519	0.12	1.2844	34.1	0.0908
3	19500	20009	509	0.14	1.3136	48.4	0.0917
4	29400	29999	599	0.13	1.2425	62.7	0.0869
5	39400	39989	589	0.13	1.2535	77.0	0.0878
6							

AVG 0.0893

Summary	Initial	Final	Units	@20C refT
lab time	53.5	41669	sec	-
$\log A_T(t-t')$	1.7284	8.4498	log hours	4.8878
$A_T(t-t')$	-	8.93	years	8.81
Strain	7.32	12.70	%	-
Modulus	122891.4	69528.9	lb/rib	-

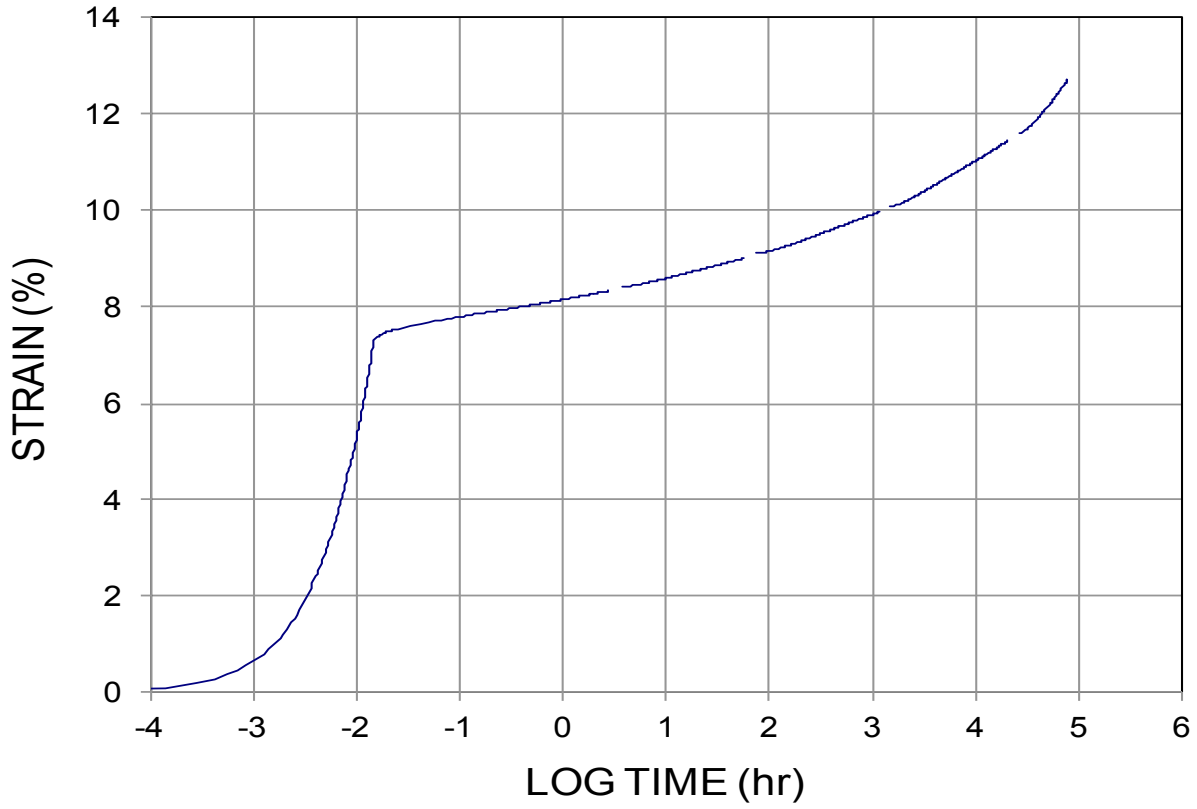

Figure F-10. SIM/Creep data/curve for ParaWeb 50 at load level of 76.00% UTS.

Accelerated Creep Rupture via SIM - ASTM D 6992

SUMMARY CREEP PARAMETERS: NTPEP - Linear Composites
ParaWeb 50

Specimen: 27063n2l2-pw50-sim1 Test Date: April 2017 Method: SIM (10^4s, 14C),strapping

Average Creep Stress: 9177.7 lb/rib %UTS: 79.00

Ultimate Tensile Strength: 11617.5 lb/rib Rupture: YES

Dwell Seq	t'	t	$(t-t')_i$	Vshift(%)	$logA_T$	Temp	$logA_T/T$
1	0	0.5	0.5	-	-	19.9	-
2	9300	10019	719	0.03	1.1428	34.1	0.0808
3	19500	20009	509	0.14	1.3218	48.4	0.0923
4	29500	29999	499	0.11	1.3218	62.7	0.0925
5							
6							

Summary	Initial	Final	Units	@20C refT
lab time	53.5	36359	sec	-
$logA_T(t-t')$	1.7284	7.6227	log hours	4.0613
$A_T(t-t')$	-	1.33	years	1.31
Strain	7.60	13.13	%	-
Modulus	122805.3	69891.3	lb/rib	-

AVG 0.0886

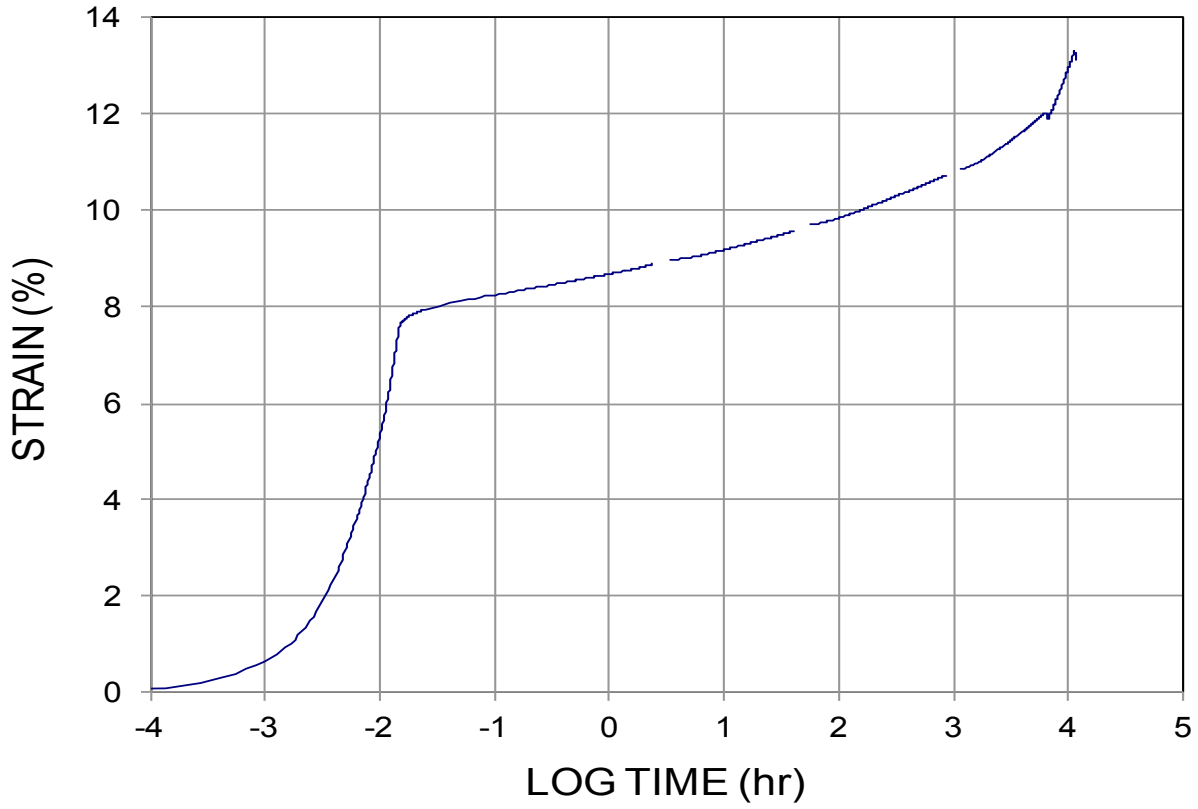

Figure F-11. SIM/Creep data/curve for ParaWeb 50 at load level of 79.00% UTS.

Accelerated Creep Rupture via SIM - ASTM D 6992

SUMMARY CREEP PARAMETERS: NTPEP - Linear Composites
ParaWeb 50

Specimen: 27063n2l2-pw50-sim1 Test Date: April 2017 Method: SIM (10^4s, 14C),strapping

Average Creep Stress: 9177.6 lb/rib %UTS: 79.00

Ultimate Tensile Strength: 11617.5 lb/rib Rupture: YES

Dwell Seq	t'	t	$(t-t')_i$	Vshift(%)	$\log A_T$	Temp	$\log A_T/T$
1	0	0.5	0.5	-	-	19.9	-
2	9500	10019	519	0.12	1.2844	34.1	0.0908
3	19500	20009	509	0.14	1.3136	48.4	0.0917
4	29400	29999	599	0.13	1.2425	62.7	0.0869
5	39400	39989	589	0.13	1.2535	77.8	0.0828
6							

AVG 0.0880

Summary	Initial	Final	Units	@20C refT
lab time	52.5	40289	sec	-
$\log A_T(t-t')$	1.7202	8.0428	log hours	4.4808
$A_T(t-t')$	-	3.50	years	3.45
Strain	7.85	14.75	%	-
Modulus	119069.1	62108.9	lb/rib	-

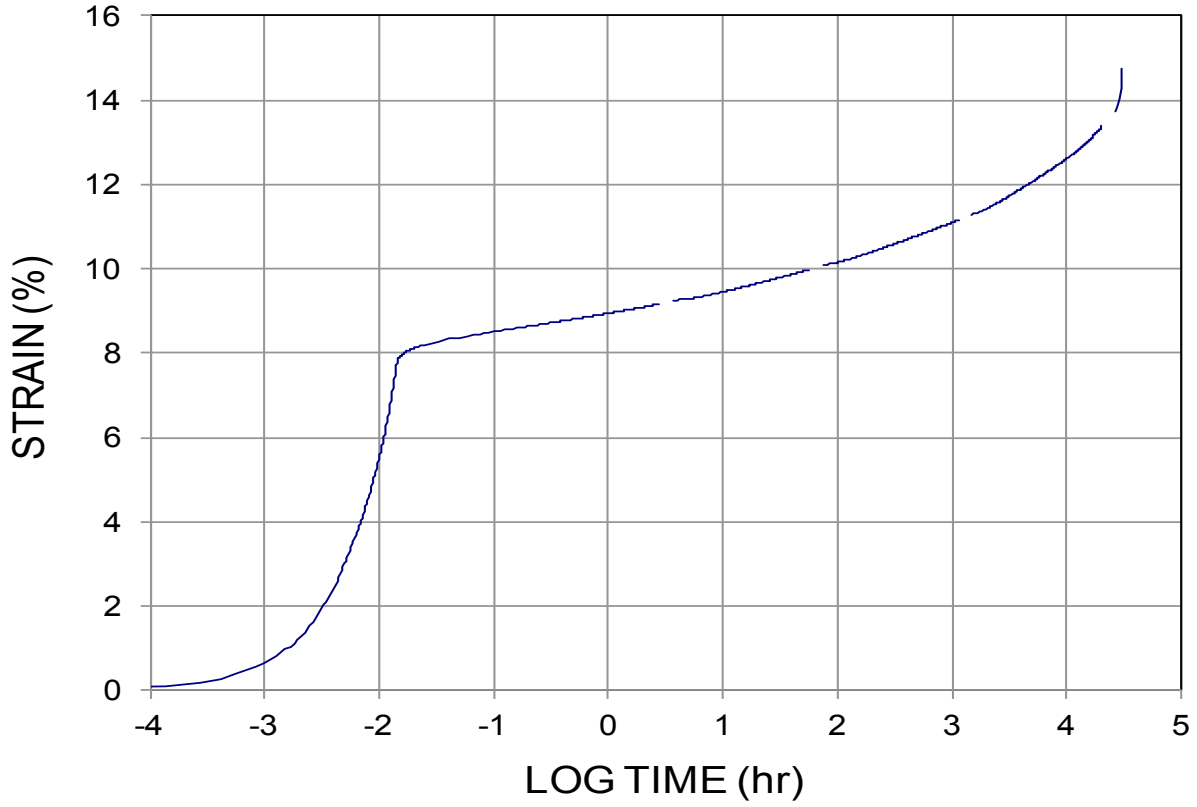

Figure F-12. SIM/Creep data/curve for ParaWeb 50 at load level of 79.00% UTS.

Accelerated Creep Rupture via SIM - ASTM D 6992

SUMMARY CREEP PARAMETERS: NTPEP - Linear Composites
ParaWeb 50

Specimen: 27063n2l2-pw50-sim Test Date: April 2017 Method: SIM (10^4s, 14C),strapping

Average Creep Stress: 9526.2 lb/rib %UTS: 82.00

Ultimate Tensile Strength: 11617.5 lb/rib Rupture: YES

Dwell Seq	t'	t	$(t-t')_i$	Vshift(%)	$\log A_T$	Temp	$\log A_T/T$
1	0	0.5	0.5	-	-	19.9	-
2	9400	10019	619	0.14	1.2078	34.1	0.0854
3	19400	20009	609	0.14	1.2398	48.4	0.0865
4	29400	29999	599	0.16	1.2466	62.9	0.0858
5							
6							

AVG 0.0859

Summary	Initial	Final	Units	@20C refT
lab time	53	30389	sec	-
$\log A_T(t-t')$	1.7243	6.6895	log hours	3.1278
$A_T(t-t')$	-	0.16	years	0.15
Strain	7.89	12.04	%	-
Modulus	122606.6	79138.7	lb/rib	-

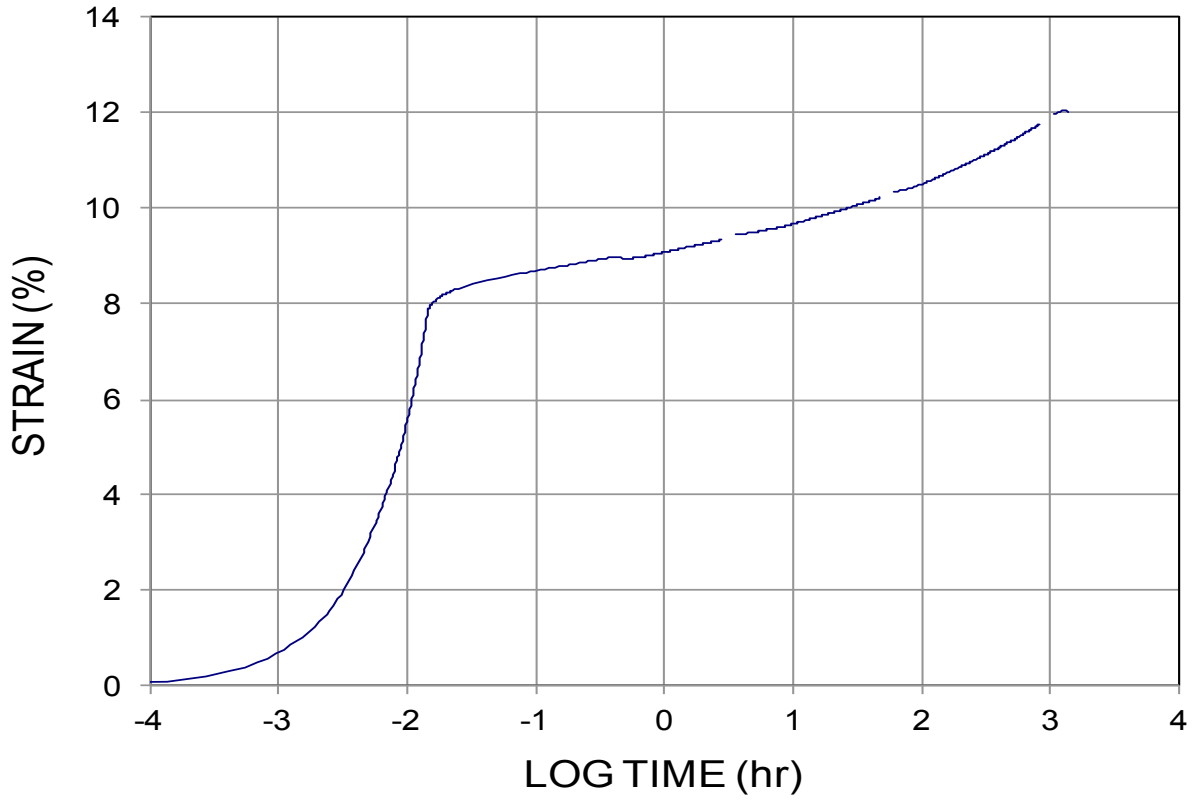

Figure F-13. SIM/Creep data/curve for ParaWeb 50 at load level of 82.00% UTS.

Accelerated Creep Rupture via SIM - ASTM D 6992

SUMMARY CREEP PARAMETERS: NTPEP - Linear Composites
ParaWeb 50

Specimen: 27063n2l2-pw50-sim Test Date: May 2017 Method: SIM (10^4s, 14C),strapping

Average Creep Stress: 9526.2 lb/rib %UTS: 82.00

Ultimate Tensile Strength: 11617.5 lb/rib Rupture: YES

Dwell Seq	t'	t	$(t-t')_i$	Vshift(%)	$\log A_T$	Temp	$\log A_T/T$
1	0	0.5	0.5	-	-	19.9	-
2	9500	10019	519	0.11	1.2844	34.1	0.0908
3	19400	20009	609	0.14	1.2357	48.4	0.0862
4	29400	29999	599	0.16	1.2466	62.6	0.0882
5							
6							

AVG 0.0884

Summary	Initial	Final	Units	@20C refT
lab time	53	30779	sec	-
$\log A_T(t-t')$	1.7243	6.9062	log hours	3.3442
$A_T(t-t')$	-	0.26	years	0.25
Strain	8.14	14.60	%	-
Modulus	118457.8	65263.4	lb/rib	-

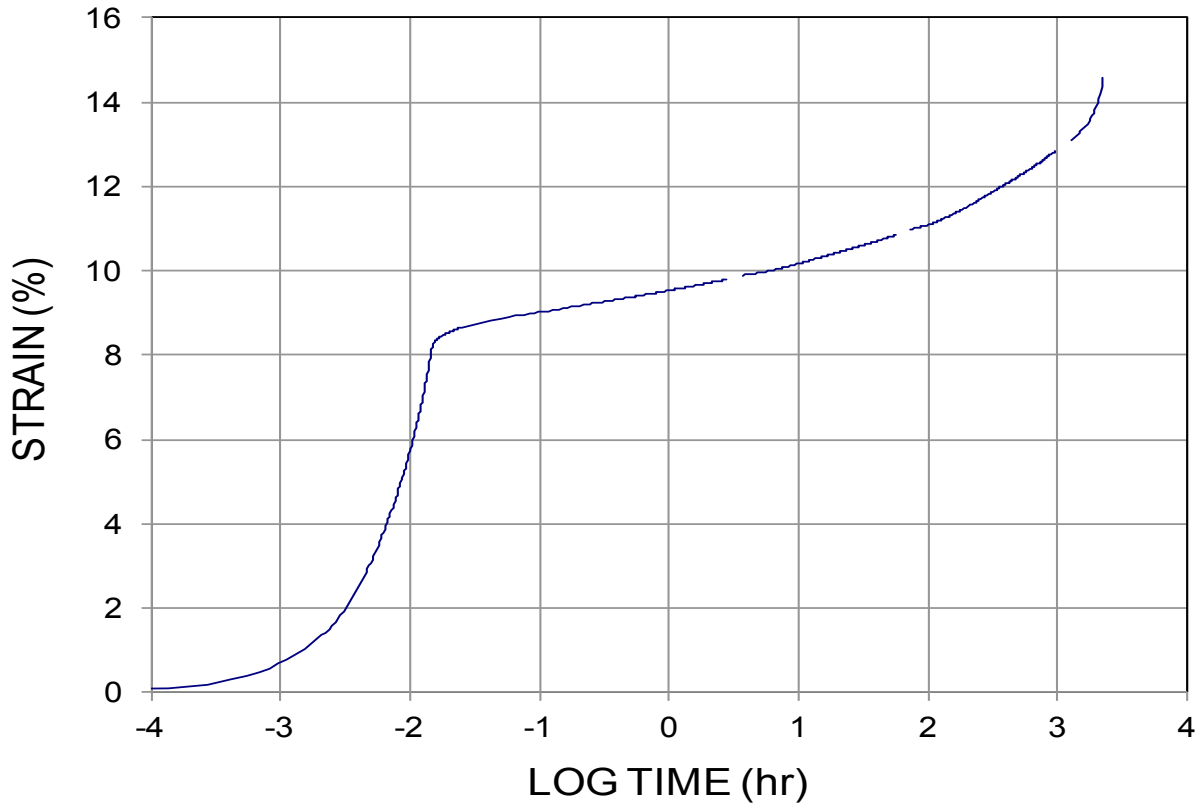

Figure F-14. SIM/Creep data/curve for ParaWeb 50 at load level of 82.00% UTS.

Accelerated Creep Rupture via SIM - ASTM D 6992

SUMMARY CREEP PARAMETERS: NTPEP - Linear Composites
ParaWeb 50

Specimen: 27063n2l2-pw50-sim Test Date: April 2017 Method: SIM (10^4s, 14C),strapping

Average Creep Stress: 9874.6 lb/rib %UTS: 85.00

Ultimate Tensile Strength: 11617.5 lb/rib Rupture: YES

Dwell Seq	t'	t	$(t-t')_i$	Vshift(%)	$logA_T$	Temp	$logA_T/T$
1	0	0.5	0.5	-	-	19.9	-
2	9500	10019	519	0.13	1.2844	34.1	0.0908
3	19400	20009	609	0.16	1.2357	48.6	0.0849
4							
5							
6							

AVG 0.0878

Summary	Initial	Final	Units	@20C refT
lab time	55.5	21659	sec	-
$logA_T(t-t')$	1.7443	5.8740	log hours	2.3120
$A_T(t-t')$	-	0.02	years	0.02
Strain	8.19	13.57	%	-
Modulus	122207.0	72648.4	lb/rib	-

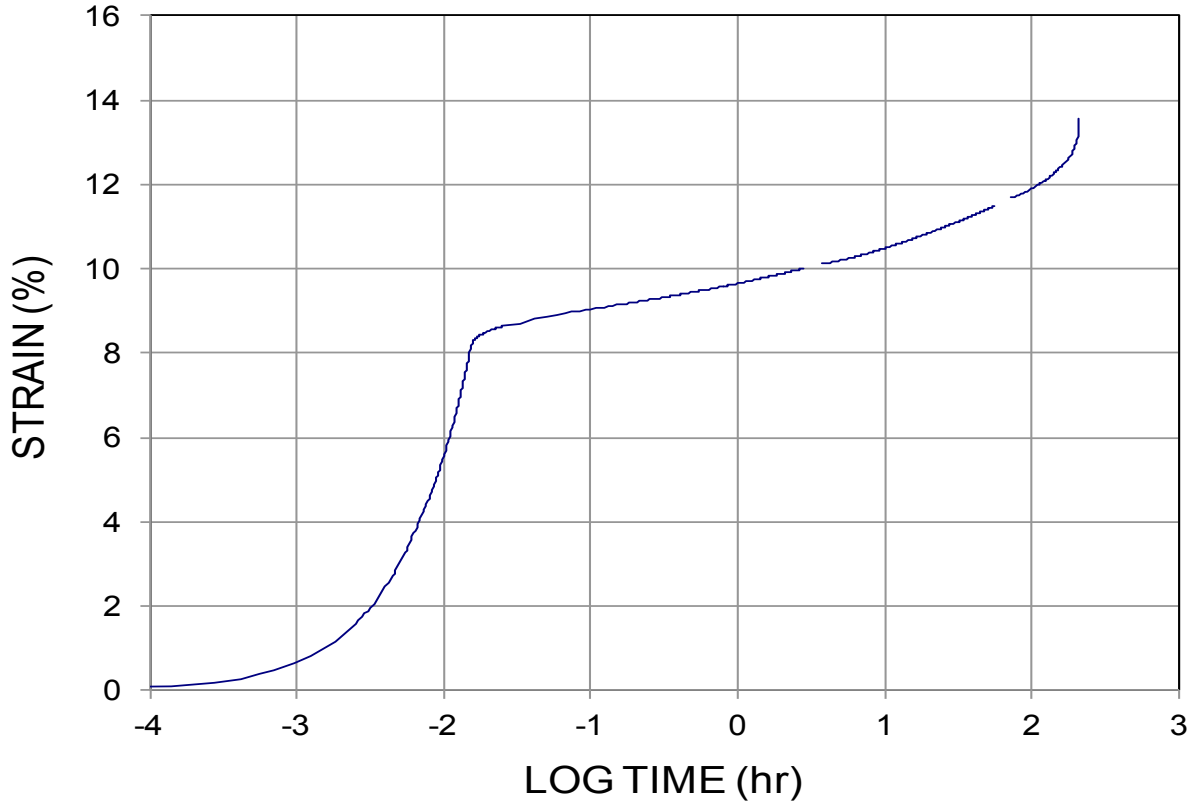

Figure F-15. SIM/Creep data/curve for ParaWeb 50 at load level of 85.00% UTS.

Accelerated Creep Rupture via SIM - ASTM D 6992

SUMMARY CREEP PARAMETERS: NTPEP - Linear Composites
ParaWeb 50

Specimen: 27063n2l2-pw50-sim Test Date: May 2017 Method: SIM (10^4s, 14C),strapping

Average Creep Stress: 9874.5 lb/rib %UTS: 85.00

Ultimate Tensile Strength: 11617.5 lb/rib Rupture: YES

Dwell Seq	t'	t	$(t-t')_i$	Vshift(%)	$logA_T$	Temp	$logA_T/T$
1	0	0.5	0.5	-	-	19.9	-
2	9400	10019	619	0.1	1.2078	34.1	0.0854
3							
4							
5							
6							

AVG 0.0854

Summary	Initial	Final	Units	@20C refT
lab time	58	19979	sec	-
$logA_T(t-t')$	1.7634	5.2323	log hours	1.6706
$A_T(t-t')$	-	0.01	years	0.01
Strain	8.41	12.58	%	-
Modulus	119003.0	78516.7	lb/rib	-

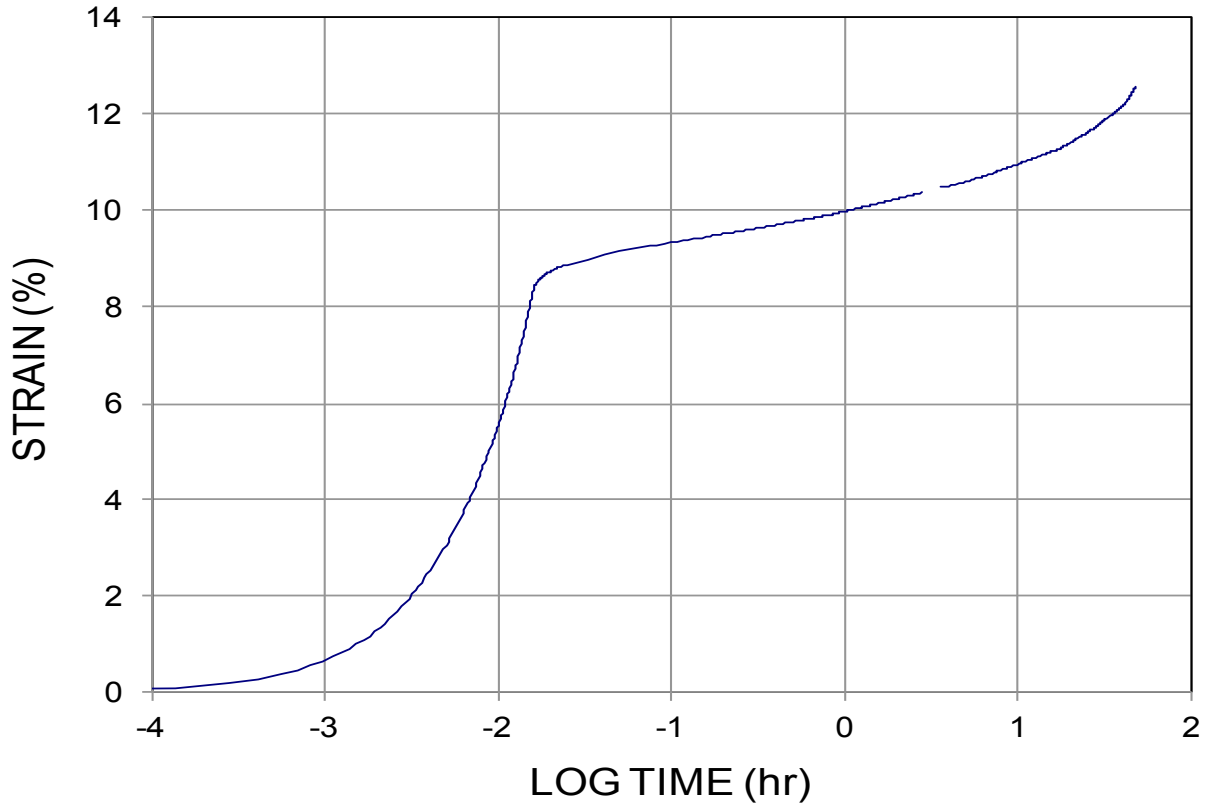

Figure F-16. SIM/Creep data/curve for ParaWeb 50 at load level of 85.00% UTS.

Accelerated Creep Rupture via SIM - ASTM D 6992

SUMMARY CREEP PARAMETERS: NTPEP - Linear Composites
ParaWeb 135

Specimen: 27063n2l2-pw135-sin Test Date: July 2017 Method: SIM (10^4s, 14C),strapping

Average Creep Stress: 24942.1 lb/rib %UTS: 71.00

Ultimate Tensile Strength: 35130.0 lb/rib Rupture: YES

Dwell Seq	t'	t	$(t-t')_i$	Vshift(%)	$logA_T$	Temp	$logA_T/T$
1	0	0.5	0.5	-	-	19.9	-
2	9550	10019	469	0.14	1.3283	34.1	0.0939
3	19500	20009	509	0.15	1.3115	48.4	0.0915
4	29500	29999	499	0.2	1.3218	62.7	0.0925
5	39500	39989	489	0.24	1.3302	77.0	0.0928
6	49200	49979	779	0.2	1.1275	91.6	0.0775

AVG 0.0896

Summary	Initial	Final	Units	@20C refT
lab time	69	56579	sec	-
$logA_T(t-t')$	1.8388	10.2874	log hours	6.7252
$A_T(t-t')$	-	614.17	years	605.88
Strain	8.490	17.034	%	-
Modulus	295858.7	146428.0	lb/rib	-

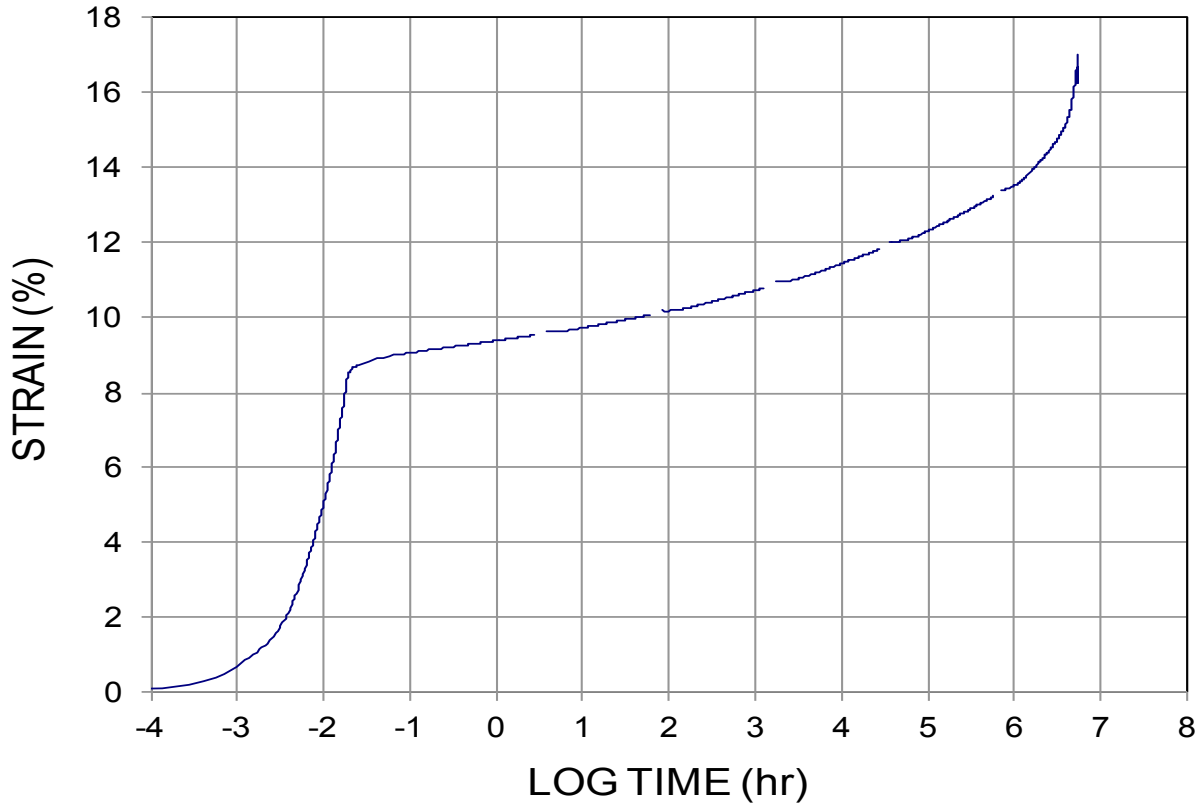

Figure F-17. SIM/Creep data/curve for ParaWeb 135 at load level of 71.00% UTS.

Accelerated Creep Rupture via SIM - ASTM D 6992

SUMMARY CREEP PARAMETERS: NTPEP - Linear Composites
ParaWeb 135

Specimen: 27063n2l2-pw135-sin Test Date: July 2017 Method: SIM (10^4s, 14C),strapping

Average Creep Stress: 26347.1 lb/rib %UTS: 75.00

Ultimate Tensile Strength: 35130.0 lb/rib Rupture: YES

Dwell Seq	t'	t	$(t-t')_i$	Vshift(%)	$logA_T$	Temp	$logA_T/T$
1	0	0.5	0.5	-	-	19.9	-
2	9500	10019	519	0.15	1.2844	34.1	0.0908
3	19500	20009	509	0.18	1.3136	48.4	0.0917
4	29500	29999	499	0.22	1.3218	62.7	0.0925
5	39000	39989	989	0.12	1.0243	77.0	0.0714
6	48800	49979	1179	0.2	0.9679	92.0	0.0646

AVG 0.0820

Summary	Initial	Final	Units	@20C refT
lab time	70	50339	sec	-
$logA_T(t-t')$	1.8451	9.0992	log hours	5.5371
$A_T(t-t')$	-	39.82	years	39.30
Strain	8.053	14.677	%	-
Modulus	330609.8	179534.8	lb/rib	-

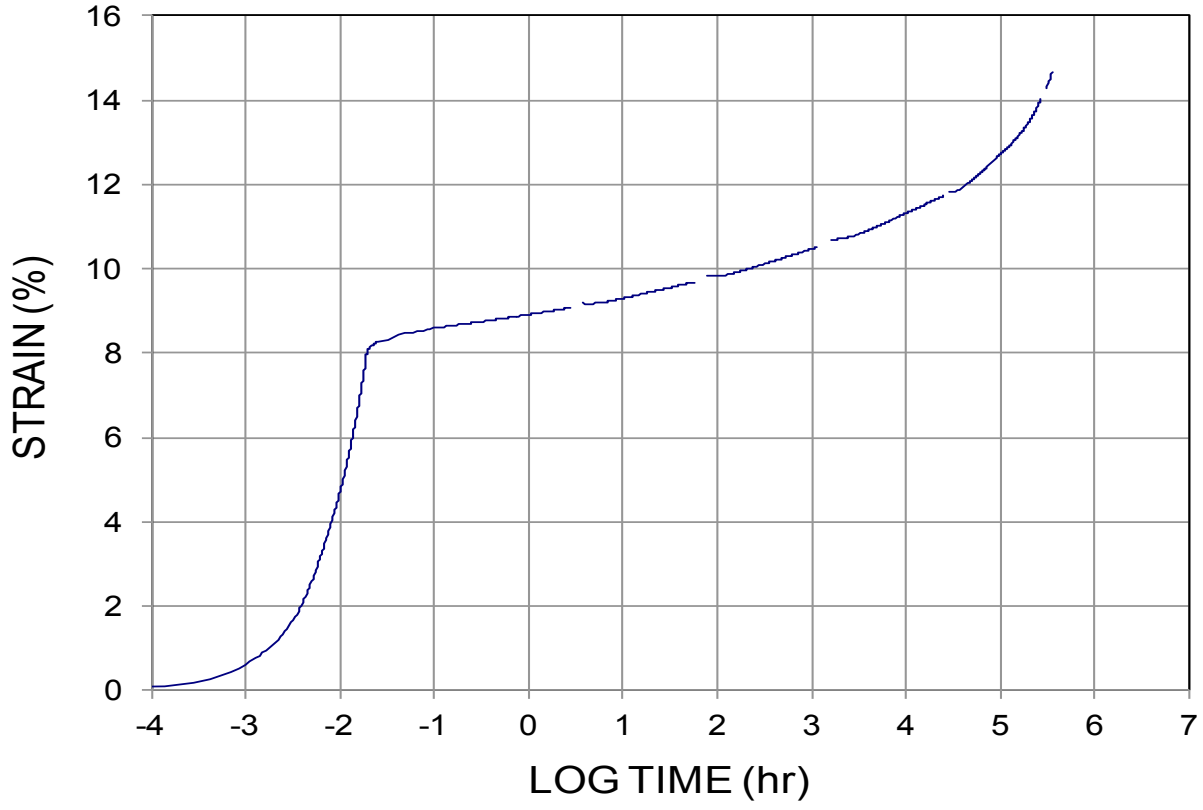

Figure F-18. SIM/Creep data/curve for ParaWeb 135 at load level of 75.00% UTS.

Accelerated Creep Rupture via SIM - ASTM D 6992

SUMMARY CREEP PARAMETERS: NTPEP - Linear Composites
ParaWeb 135

Specimen: 27063n2l2-pw135-sin Test Date: July 2017 Method: SIM (10^4s, 14C),strapping

Average Creep Stress: 27752.2 lb/rib %UTS: 79.00

Ultimate Tensile Strength: 35130.0 lb/rib Rupture: YES

Dwell Seq	t'	t	$(t-t')_i$	Vshift(%)	$logA_T$	Temp	$logA_T/T$
1	0	0.5	0.5	-	-	19.9	-
2	9600	10019	419	0.18	1.3773	34.1	0.0973
3	19600	20009	409	0.2	1.4044	48.4	0.0980
4	29500	29999	499	0.2	1.3176	62.7	0.0924
5							
6							

Summary	Initial	Final	Units	@20C refT
lab time	74	33029	sec	-
$logA_T(t-t')$	1.8692	7.6470	log hours	4.0846
$A_T(t-t')$	-	1.41	years	1.39
Strain	9.061	15.389	%	-
Modulus	307977.6	180376.0	lb/rib	-

AVG 0.0959

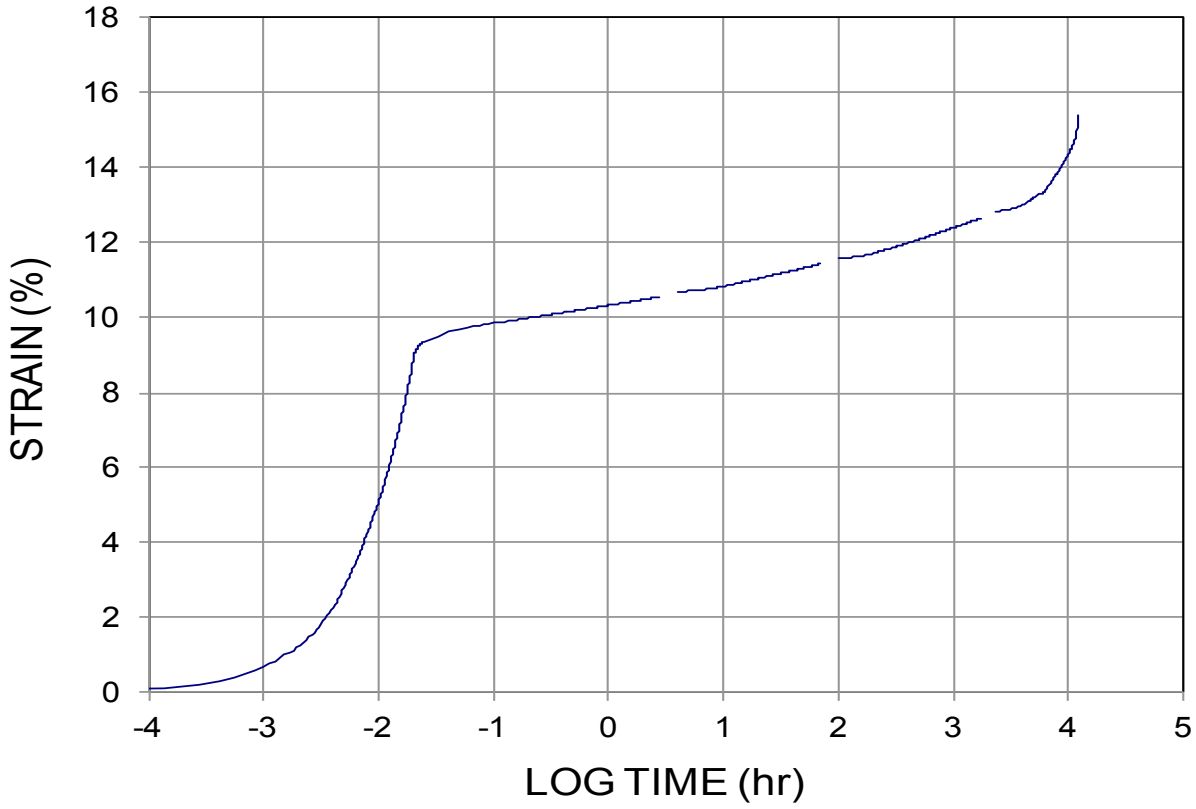

Figure F-19. SIM/Creep data/curve for ParaWeb 135 at load level of 79.00% UTS.

Accelerated Creep Rupture via SIM - ASTM D 6992

SUMMARY CREEP PARAMETERS: NTPEP - Linear Composites
ParaWeb 135

Specimen: 27063n2l2-pw135-sin Test Date: July 2017 Method: SIM (10^4s, 14C),strapping

Average Creep Stress: 29157.2 lb/rib %UTS: 83.00

Ultimate Tensile Strength: 35130.0 lb/rib Rupture: YES

Dwell Seq	t'	t	$(t-t')_i$	Vshift(%)	$logA_T$	Temp	$logA_T/T$
1	0	0.5	0.5	-	-	19.9	-
2	9600	10019	419	0.22	1.3773	34.1	0.0973
3	19400	20009	609	0.18	1.2315	48.5	0.0854
4							
5							
6							

Summary	Initial	Final	Units	@20C refT
lab time	77	23369	sec	-
$logA_T(t-t')$	1.8865	6.2075	log hours	2.6451
$A_T(t-t')$	-	0.05	years	0.05
Strain	9.454	14.878	%	-
Modulus	309930.4	195978.6	lb/rib	-

AVG 0.0913

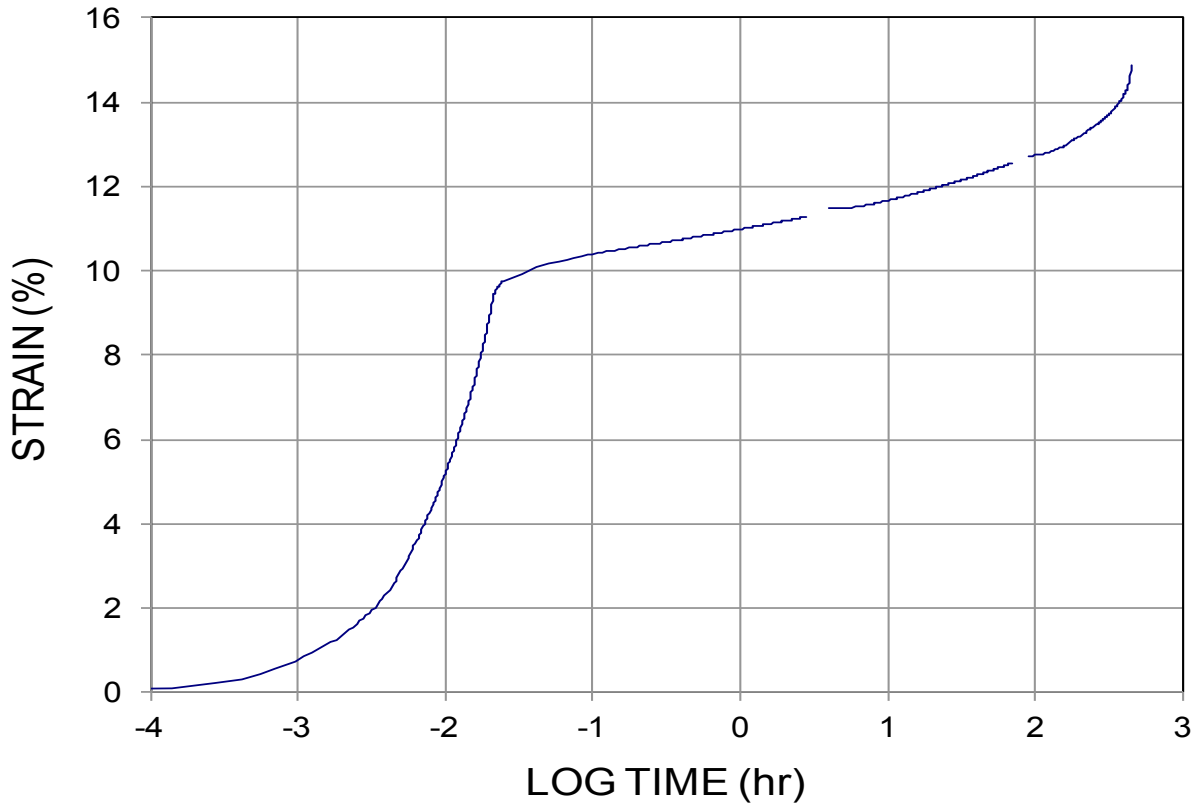

Figure F-20. SIM/Creep data/curve for ParaWeb 135 at load level of 83.00% UTS.

Accelerated Creep Rupture via SIM - ASTM D 6992

SUMMARY CREEP PARAMETERS: NTPEP - Linear Composites
ParaLink 300

Specimen: 27063n2l2-pl300-sim Test Date: July 2017 Method: SIM (10^4s, 14C),strapping

Average Creep Stress: 1849.7 lb/rib %UTS: 72.00

Ultimate Tensile Strength: 2569.1 lb/rib Rupture: YES

Dwell Seq	t'	t	$(t-t')_i$	Vshift(%)	$logA_T$	Temp	$logA_T/T$
1	0	0.5	0.5	-	-	19.9	-
2	9500	10019	519	0.1	1.2844	34.1	0.0908
3	19500	20009	509	0.12	1.3136	48.4	0.0917
4	29500	29999	499	0.14	1.3218	62.7	0.0925
5	39500	39989	489	0.15	1.3302	77.0	0.0928
6	49400	49979	579	0.15	1.2564	91.8	0.0854

AVG 0.0906

Summary	Initial	Final	Units	@20C refT
lab time	58	54239	sec	-
$logA_T(t-t')$	1.7634	10.1911	log hours	6.6291
$A_T(t-t')$	-	492.03	years	485.60
Strain	7.155	13.758	%	-
Modulus	26065.8	13442.1	lb/rib	-

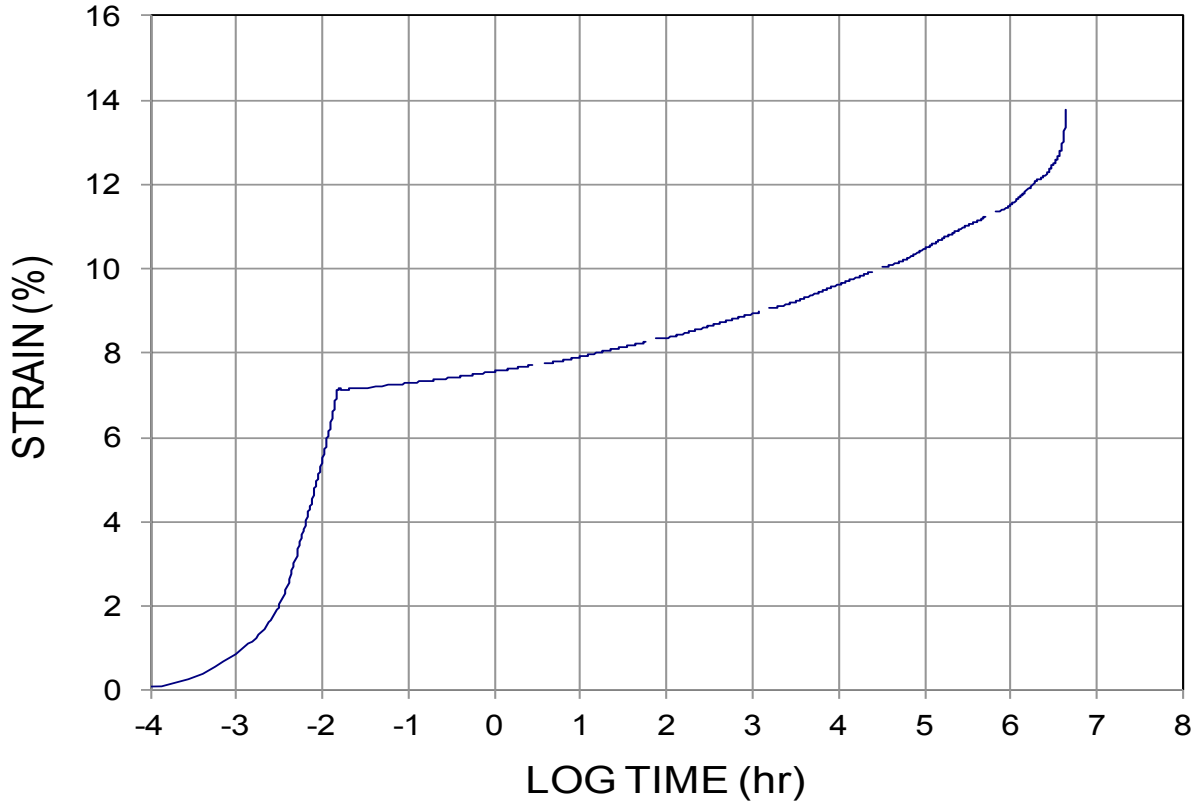

Figure F-21. SIM/Creep data/curve for ParaLink 300 at load level of 72.00% UTS.

Accelerated Creep Rupture via SIM - ASTM D 6992

SUMMARY CREEP PARAMETERS: NTPEP - Linear Composites
ParaLink 300

Specimen: 27063n2l2-pl300-sim Test Date: July 2017 Method: SIM (10^4s, 14C),strapping

Average Creep Stress: 23429.4 lb/ft %UTS: 76.00

Ultimate Tensile Strength: 30828.7 lb/ft Rupture: YES

Dwell Seq	t'	t	$(t-t')_i$	Vshift(%)	$logA_T$	Temp	$logA_T/T$
1	0	0.5	0.5	-	-	19.9	-
2	9300	10019	719	0.16	1.1428	34.1	0.0808
3	19500	20009	509	0.14	1.3218	48.4	0.0923
4	29500	29999	499	0.16	1.3218	62.7	0.0925
5	39400	39989	589	0.2	1.2494	77.1	0.0871
6							

AVG 0.0882

Summary	Initial	Final	Units	@20C refT
lab time	52.5	45089	sec	-
$logA_T(t-t')$	1.7202	8.7908	log hours	5.2294
$A_T(t-t')$	-	19.58	years	19.35
Strain	8.10	13.61	%	-
Modulus	293006.1	172183.1	lb/ft	-

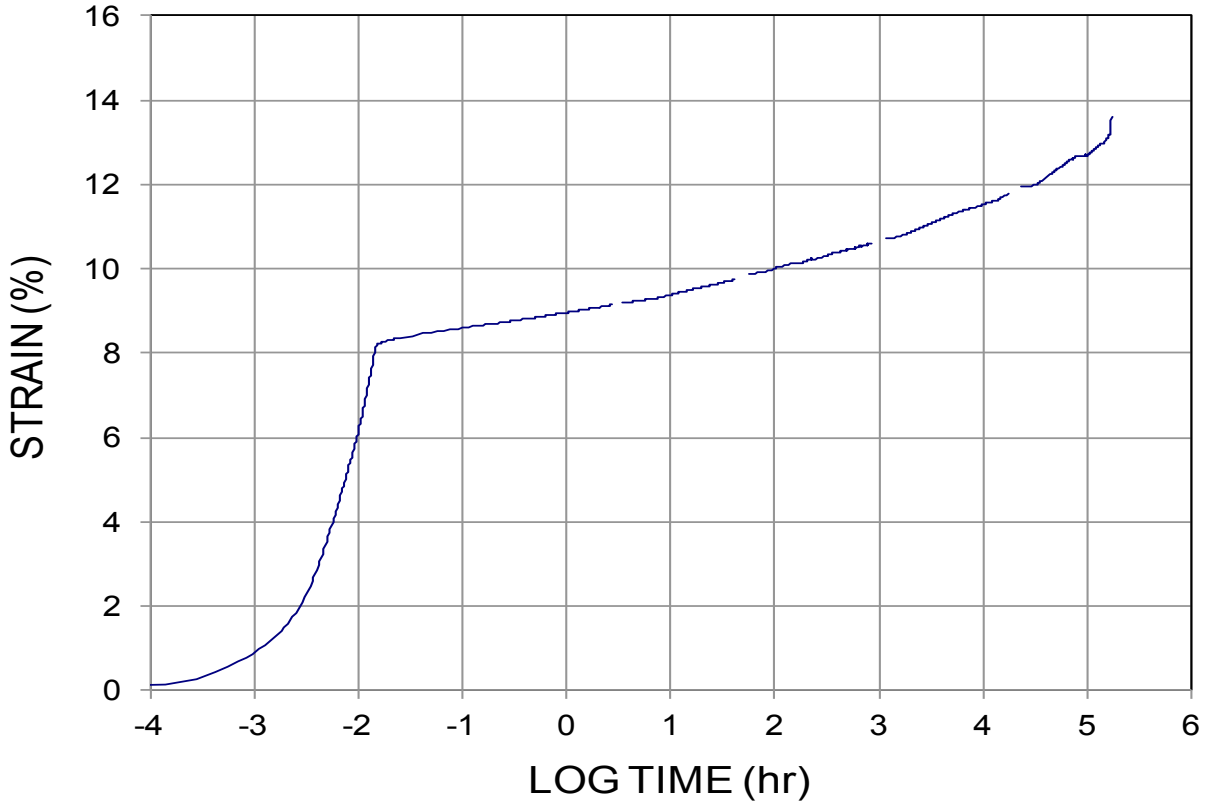

Figure F-22. SIM/Creep data/curve for ParaLink 300 at load level of 76.00% UTS.

Accelerated Creep Rupture via SIM - ASTM D 6992

SUMMARY CREEP PARAMETERS: NTPEP - Linear Composites
ParaLink 300

Specimen: 27063n2l2-pl300-sim Test Date: July 2017 Method: SIM (10^4s, 14C),strapping

Average Creep Stress: 24662.0 lb/ft %UTS: 80.00

Ultimate Tensile Strength: 30828.7 lb/ft Rupture: YES

Dwell Seq	t'	t	$(t-t')_i$	Vshift(%)	$logA_T$	Temp	$logA_T/T$
1	0	0.5	0.5	-	-	19.9	-
2	9900	10019	119	0.2	1.9240	34.1	0.1360
3	19700	20009	309	0.2	1.5135	48.4	0.1055
4							
5							
6							

AVG 0.1206

Summary	Initial	Final	Units	@20C refT
lab time	64.5	27839	sec	-
$logA_T(t-t')$	1.8096	7.3480	log hours	3.7831
$A_T(t-t')$	-	0.71	years	0.69
Strain	8.67	12.10	%	-
Modulus	287829.1	203549.5	lb/ft	-

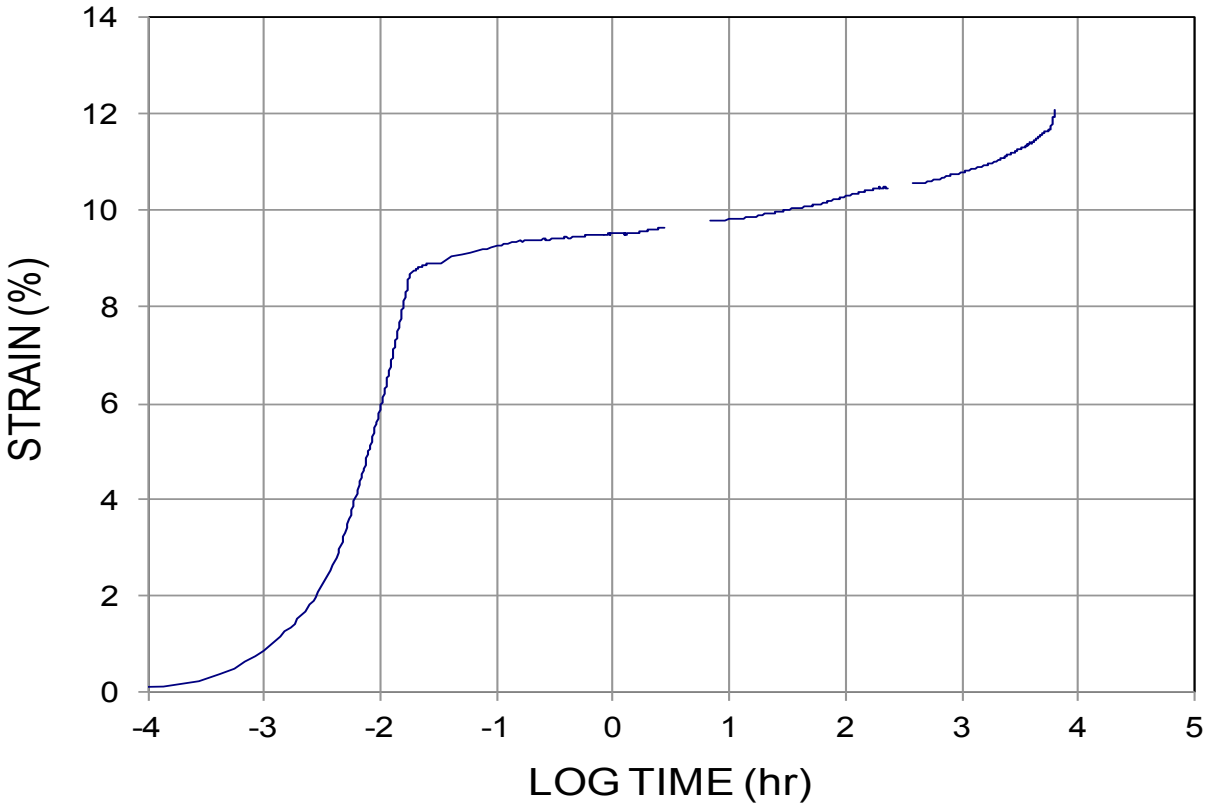

Figure F-23. SIM/Creep data/curve for ParaLink 300 at load level of 80.00% UTS.

Accelerated Creep Rupture via SIM - ASTM D 6992

SUMMARY CREEP PARAMETERS: NTPEP - Linear Composites
ParaLink 300

Specimen: 27063n2l2-pl300-sim Test Date: July 2017 Method: SIM (10^4s, 14C),strapping

Average Creep Stress: 25895.4 lb/ft %UTS: 84.00

Ultimate Tensile Strength: 30828.7 lb/ft Rupture: YES

Dwell Seq	t'	t	$(t-t')_i$	Vshift(%)	$logA_T$	Temp	$logA_T/T$
1	0	0.5	0.5	-	-	19.9	-
2	9400	10019	619	0.1	1.2078	34.1	0.0854
3	19400	20009	609	0.15	1.2398	48.6	0.0856
4							
5							
6							

AVG 0.0855

Summary	Initial	Final	Units	@20C refT
lab time	64	22559	sec	-
$logA_T(t-t')$	1.8062	5.9472	log hours	2.3855
$A_T(t-t')$	-	0.03	years	0.03
Strain	10.60	15.40	%	-
Modulus	247426.0	167750.6	lb/ft	-

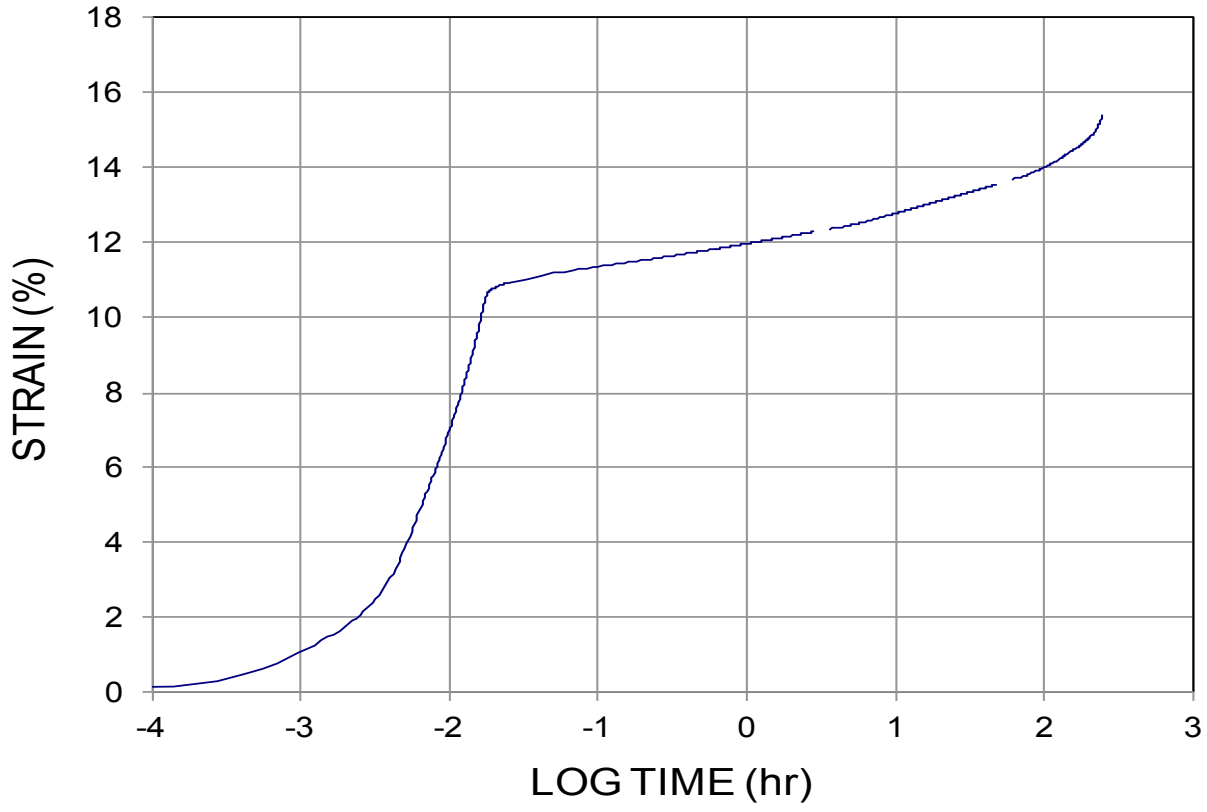

Figure F-24. SIM/Creep data/curve for ParaLink 300 at load level of 84.00% UTS.

Accelerated Creep Rupture via SIM - ASTM D 6992

SUMMARY CREEP PARAMETERS: NTPEP - Linear Composites
ParaLink 1000

Specimen: 27063n2l2-pl1000-sin Test Date: May 2017 Method: SIM (10^4s, 14C),strapping

Average Creep Stress: 50359.9 lb/ft %UTS: 70.00

Ultimate Tensile Strength: 71943.7 lb/ft Rupture: YES

Dwell Seq	t'	t	$(t-t')_i$	Vshift(%)	$\log A_T$	Temp	$\log A_T/T$
1	0	0.5	0.5	-	-	19.9	-
2	9500	10019	519	0.14	1.2844	34.1	0.0908
3	19500	20009	509	0.14	1.3136	48.4	0.0917
4	29500	29999	499	0.16	1.3218	62.7	0.0925
5	39400	39989	589	0.2	1.2494	77.0	0.0871
6	49400	49979	579	0.25	1.2605	91.7	0.0861

AVG 0.0896

Summary	Initial	Final	Units	@20C refT
lab time	62	59939	sec	-
$\log A_T(t-t')$	1.7924	10.4525	log hours	6.8905
$A_T(t-t')$	-	898.18	years	886.45
Strain	7.58	13.83	%	-
Modulus	670640.4	364066.4	lb/ft	-

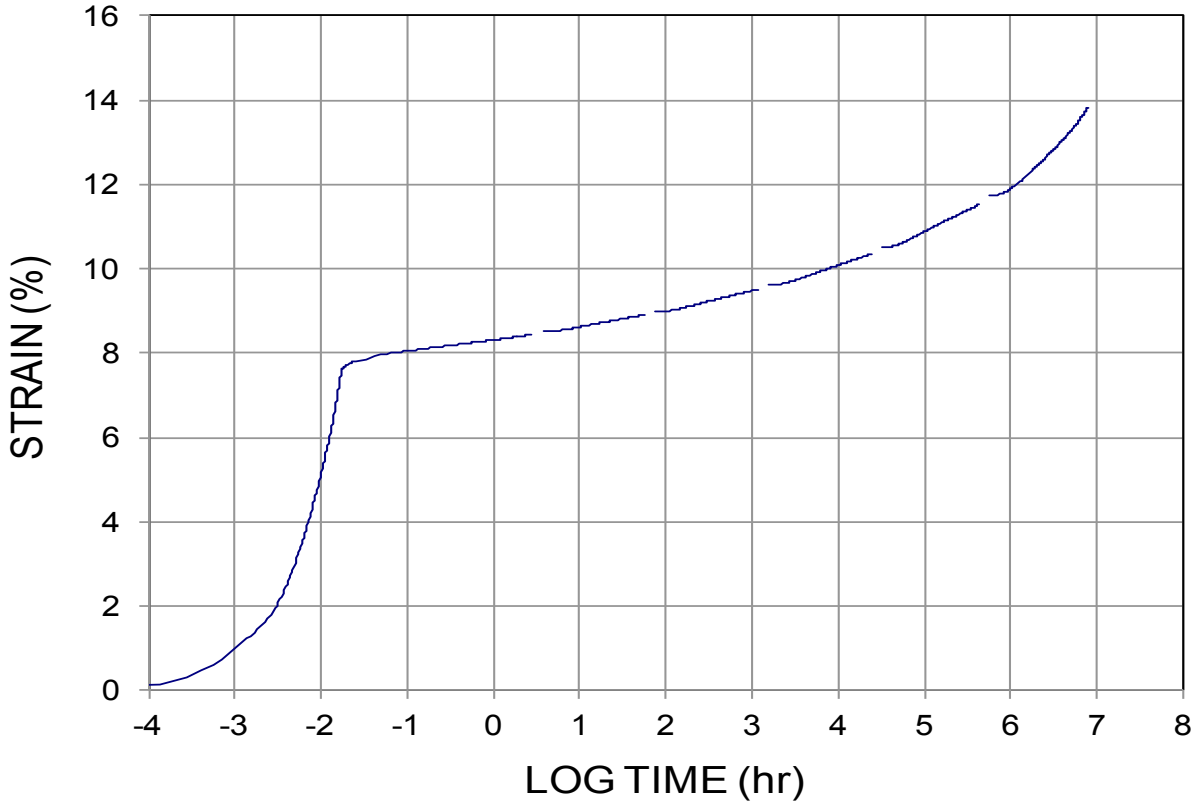

Figure F-25. SIM/Creep data/curve for ParaLink 1000 at load level of 70.00% UTS.

Accelerated Creep Rupture via SIM - ASTM D 6992

SUMMARY CREEP PARAMETERS: NTPEP - Linear Composites
ParaLink 1000

Specimen: 27063n2l2-pl1000-sin Test Date: July 2017 Method: SIM (10^4s, 14C),strapping

Average Creep Stress: 53237.2 lb/ft %UTS: 74.00

Ultimate Tensile Strength: 71943.7 lb/ft Rupture: YES

Dwell Seq	t'	t	$(t-t')_i$	Vshift(%)	$logA_T$	Temp	$logA_T/T$
1	0	0.5	0.5	-	-	19.9	-
2	9500	10019	519	0.14	1.2844	34.1	0.0908
3	19400	20009	609	0.14	1.2357	48.4	0.0862
4	29400	29999	599	0.16	1.2466	62.7	0.0872
5	39400	39989	589	0.2	1.2535	77.0	0.0874
6	49000	49979	979	0.25	1.0324	92.1	0.0687

AVG 0.0839

Summary	Initial	Final	Units	@20C refT
lab time	69	50909	sec	-
$logA_T(t-t')$	1.8388	9.3334	log hours	5.7714
$A_T(t-t')$	-	68.28	years	67.39
Strain	8.26	15.10	%	-
Modulus	649492.4	348246.5	lb/ft	-

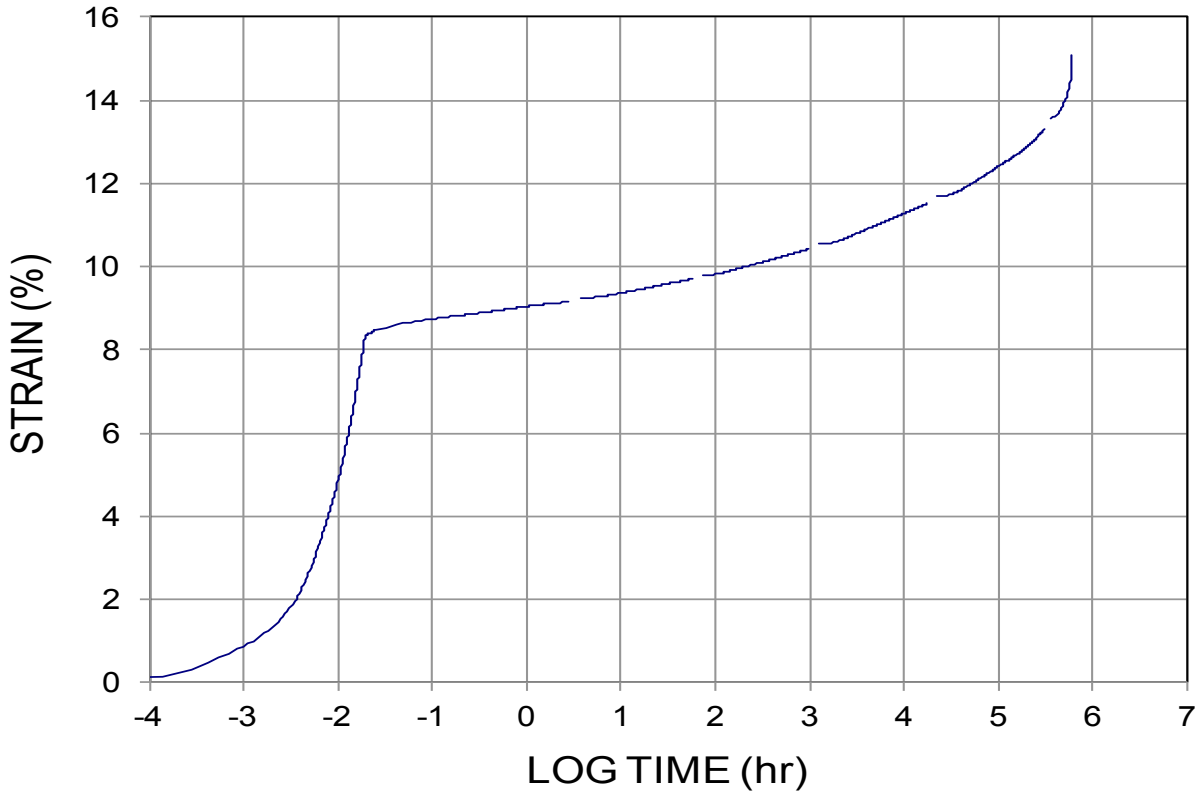

Figure F-26. SIM/Creep data/curve for ParaLink 1000 at load level of 74.00% UTS.

Accelerated Creep Rupture via SIM - ASTM D 6992

SUMMARY CREEP PARAMETERS: NTPEP - Linear Composites
ParaLink 1000

Specimen: 27063n2l2-pl1000-sin Test Date: July 2017 Method: SIM (10^4s, 14C),strapping

Average Creep Stress: 56115.4 lb/ft %UTS: 78.00

Ultimate Tensile Strength: 71943.7 lb/ft Rupture: YES

Dwell Seq	t'	t	$(t-t')_i$	Vshift(%)	$\log A_T$	Temp	$\log A_T/T$
1	0	0.5	0.5	-	-	19.9	-
2	9400	10019	619	0.12	1.2078	34.1	0.0854
3	19500	20009	509	0.14	1.3177	48.4	0.0920
4	29300	29999	699	0.16	1.1754	62.7	0.0822
5	39000	39989	989	0.2	1.0325	77.6	0.0694
6							

AVG 0.0821

Summary	Initial	Final	Units	@20C refT
lab time	72	40889	sec	-
$\log A_T(t-t')$	1.8573	8.0097	log hours	4.4481
$A_T(t-t')$	-	3.24	years	3.20
Strain	9.02	15.21	%	-
Modulus	626715.4	368686.6	lb/ft	-

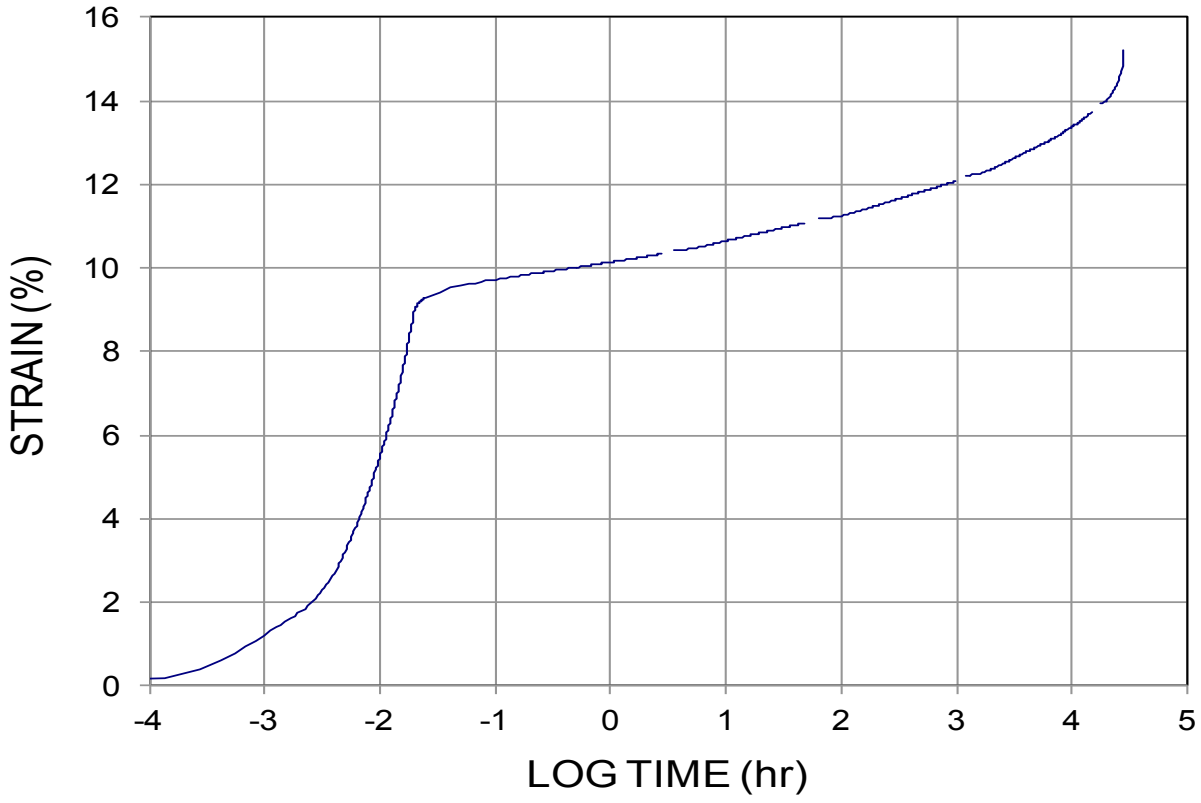

Figure F-27. SIM/Creep data/curve for ParaLink 1000 at load level of 78.00% UTS.

Accelerated Creep Rupture via SIM - ASTM D 6992

SUMMARY CREEP PARAMETERS: NTPEP - Linear Composites
ParaLink 1000

Specimen: 27063n2l2-pl1000-sin Test Date: July 2017 Method: SIM (10^4s, 14C),strapping

Average Creep Stress: 58992.7 lb/ft %UTS: 82.00

Ultimate Tensile Strength: 71943.7 lb/ft Rupture: YES

Dwell Seq	t'	t	$(t-t')_i$	Vshift(%)	$logA_T$	Temp	$logA_T/T$
1	0	0.5	0.5	-	-	19.9	-
2	9500	10019	519	0.12	1.2844	34.1	0.0908
3	19500	20009	509	0.15	1.3136	48.4	0.0917
4							
5							
6							

AVG 0.0912

Summary	Initial	Final	Units	@20C refT
lab time	75	29249	sec	-
$logA_T(t-t')$	1.8751	6.5869	log hours	3.0249
$A_T(t-t')$	-	0.12	years	0.12
Strain	9.13	13.86	%	-
Modulus	649961.7	425981.2	lb/ft	-

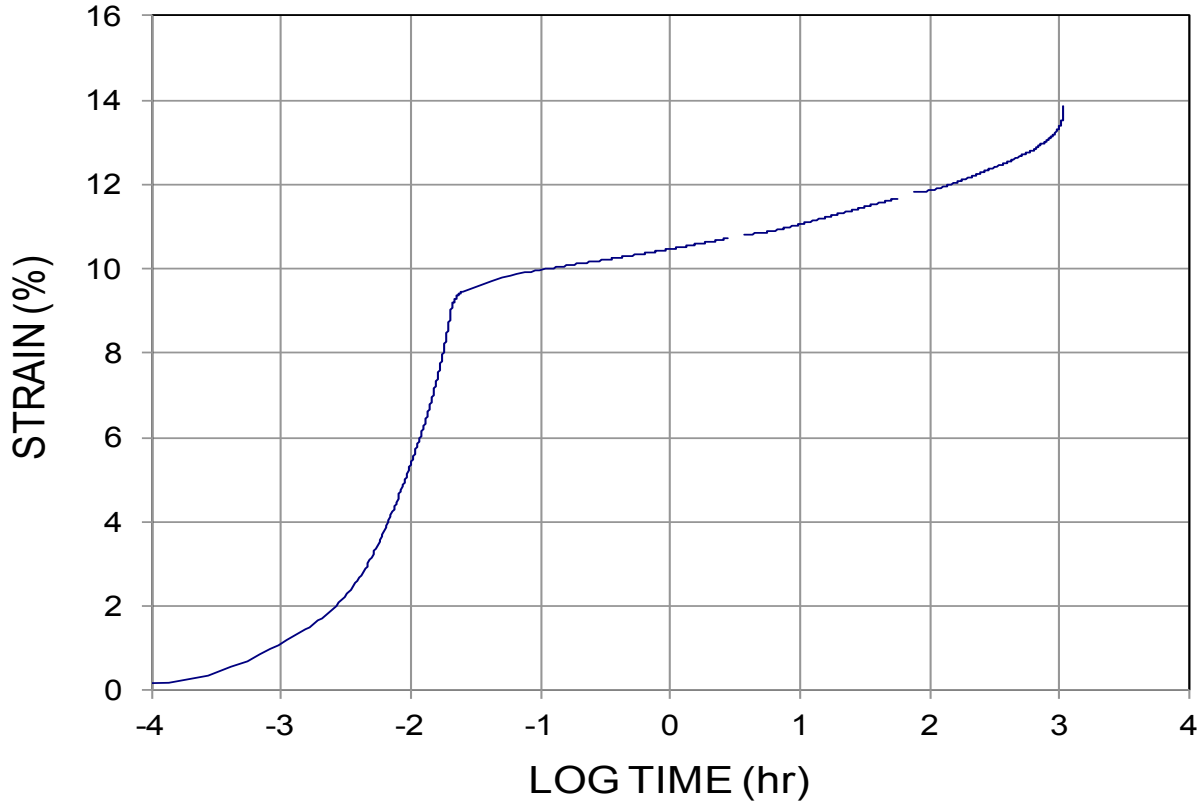

Figure F-28. SIM/Creep data/curve for ParaLink 1000 at load level of 82.00% UTS.

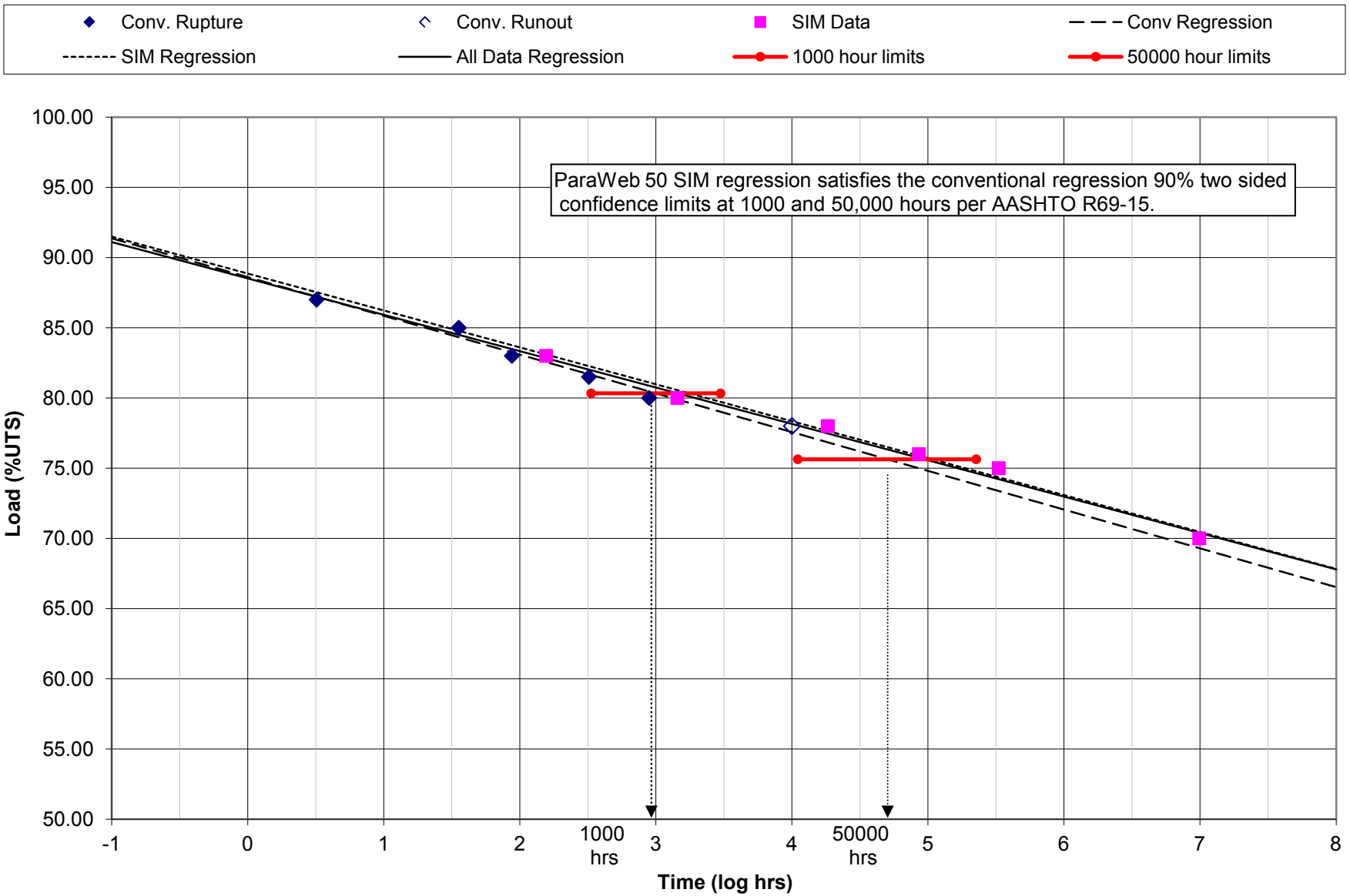

Figure F-29. Statistical evaluation results for determining validity of using SIM to extend ParaWeb conventional creep rupture data.

ParaWeb 50- ParaWeb 30- Creep Rupture

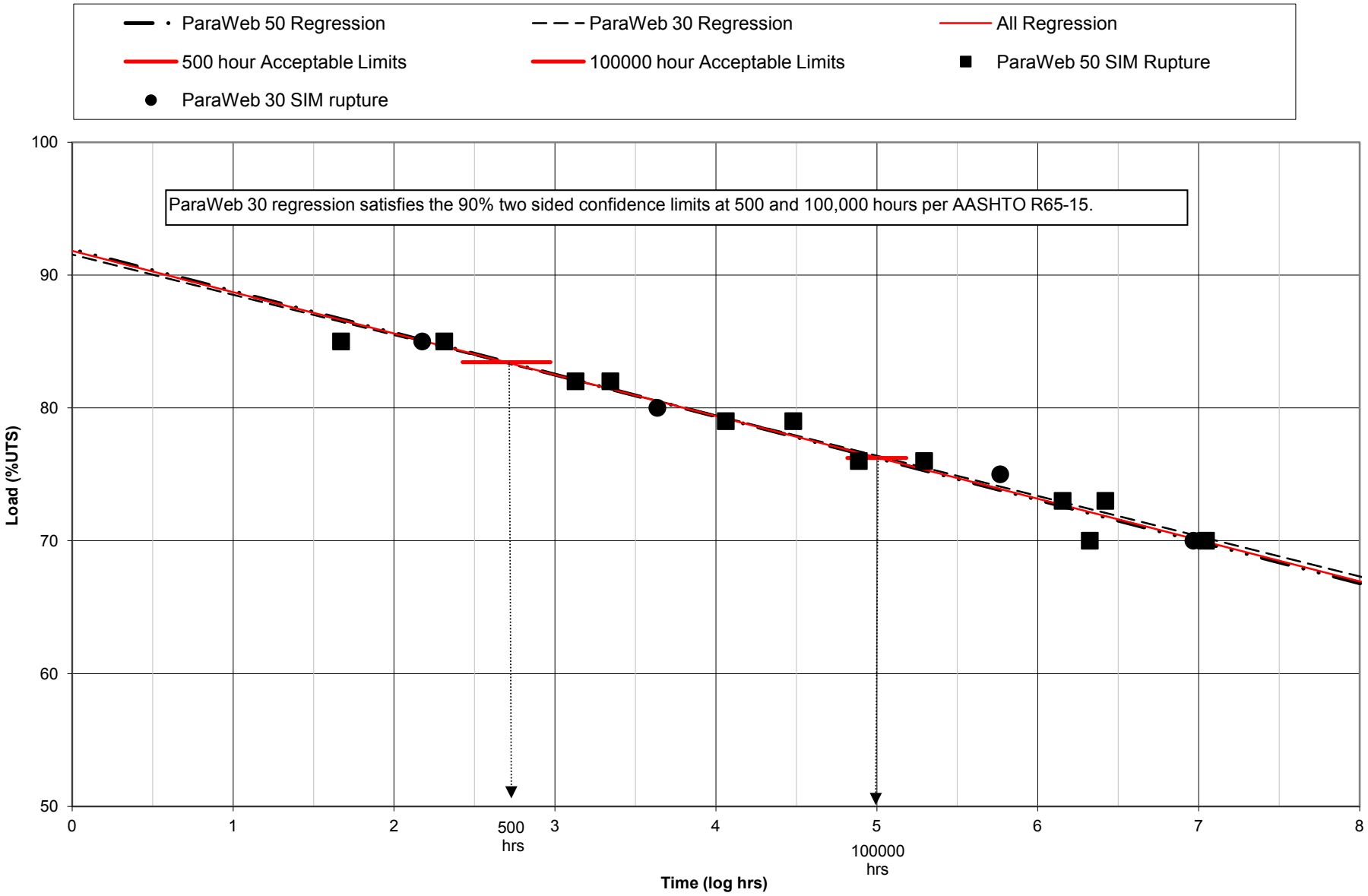

Figure F-30. Statistical evaluation results for determining validity of creating composite creep rupture envelope for the ParaWeb/ParaLink product line.

Table F-2. Computation table to determine statistical validity of creating composite creep rupture envelope for Linear Composites ParaWeb/ParaLink product line - ParaWeb 30 and ParaWeb 50 comparision.

SIM Tests on ParaWeb 30

Test Report	Product	Expected time, log hrs	%UTS	Rupture
	ParaWeb 30	6.9671	70.00	70.00
	ParaWeb 30	5.7666	75.00	75.00
	ParaWeb 30	3.6362	80.00	80.00
	ParaWeb 30	2.1750	85.00	85.00

student's t =	1.812	(90% 2-sided prediction limit)	
n-ParaWeb 30 =	4		
n-ParaWeb 50 =	12	d-o-f	10
treg =	2.699		
treg =	5.000		
P500 =	83.4488		
P100000 =	76.2232		
sigma squared =	0.1160		
sigma =	0.3406		

90% 2-sided conf. limit	
df	student's t
2	2.92
3	2.353
4	2.132
5	2.015
6	1.943
7	1.895
8	1.86
9	1.833
10	1.812
11	1.796
12	1.782
13	1.771
14	1.761

SIM & Conventional Tests on ParaWeb 50

Test Report	Product	time, log hrs	%UTS	Rupture	Runout	logti-logtbar	(logti-logtbar)2	Pi - Pbar	(Pi-Pbar)2	K * L	
	ParaWeb 50	7.0453	70.00	70.00		2.45	6.0118	-7.50	56.25	-18.3893	SIM
	ParaWeb 50	6.3231	70.00	70.00		1.73	2.9919	-7.50	56.25	-12.9728	SIM
	ParaWeb 50	6.4199	73.00	73.00		1.83	3.3361	-4.50	20.25	-8.21925	SIM
	ParaWeb 50	6.1543	73.00	73.00		1.56	2.4364	-4.50	20.25	-7.02405	SIM
	ParaWeb 50	5.2937	76.00	76.00		0.70	0.4904	-1.50	2.25	-1.05045	SIM
	ParaWeb 50	4.8878	76.00	76.00		0.29	0.0867	-1.50	2.25	-0.4416	SIM
	ParaWeb 50	4.0613	79.00	79.00		-0.53	0.2831	1.50	2.25	-0.79815	SIM
	ParaWeb 50	4.4808	79.00	79.00		-0.11	0.0127	1.50	2.25	-0.1689	SIM
	ParaWeb 50	3.1278	82.00	82.00		-1.47	2.1480	4.50	20.25	-6.5952	SIM
	ParaWeb 50	3.3442	82.00	82.00		-1.25	1.5605	4.50	20.25	-5.6214	SIM
	ParaWeb 50	2.3120	85.00	85.00		-2.28	5.2048	7.50	56.25	-17.1105	SIM
	ParaWeb 50	1.6706	85.00	85.00		-2.92	8.5428	7.50	56.25	-21.921	SIM
	ParaWeb 50										SIM
	ParaWeb 50										SIM
	ParaWeb 50										SIM
	ParaWeb 50										SIM
	ParaWeb 50										SIM
	ParaWeb 50										SIM
	Sum	55.1208	930.00		Sum	0.00	33.11	0.00	315.00	-100.31	
	Mean	4.5934	77.50								

* runout plotting below the regression line is not included in the regression

ParaWeb 50 - 500 hrs (log 2.699)		
log tL - lower =	2.43	83.4488
log tL - upper =	2.97	83.4488
ParaWeb 30 - logtL @ Load =	2.67	OK

ParaWeb 50 - 100000 hrs (log 5.000)		
log tL - lower =	4.82	76.2232
log tL - upper =	5.18	76.2232
ParaWeb 30 - logtL @ Load =	5.06	OK

ParaWeb 30 - All Points
time is dependent variable:

	if time were the y axis	but time is the x axis
slope	-0.33013	-3.02907
intercept	30.22161	91.54346
R squared	0.98948	0.98948
	-2	97.60161
	10	61.25273
2.6990	83.368	= 500 hr intercept
5.0000	76.3981	= 100000 hr intercept

ParaWeb 50 - All Points
time is dependent variable:

	if time were the y axis	but time is the x axis
slope	-0.31845	-3.14019
intercept	29.27346	91.92413
R squared	0.964949	0.964949
	-2	98.20451
	10	60.52227
2.6990	83.44877	= 500 hr intercept
5.0000	76.2232	= 100000 hr intercept

All Creep Data ParaWeb 50 & ParaWeb 30 (conv & SIM)
time is dependent variable:

	if time were the y axis	but time is the x axis
slope	-0.32177	-3.1078
intercept	29.54136	91.80864
R squared	0.97178	0.97178
	-2	98.02424
	10	60.73064
5.8176	73.7287	= 75-yr intercept
5.9425	73.34054	= 100-yr intercept

ParaWeb 50- ParaWeb 135- Creep Rupture

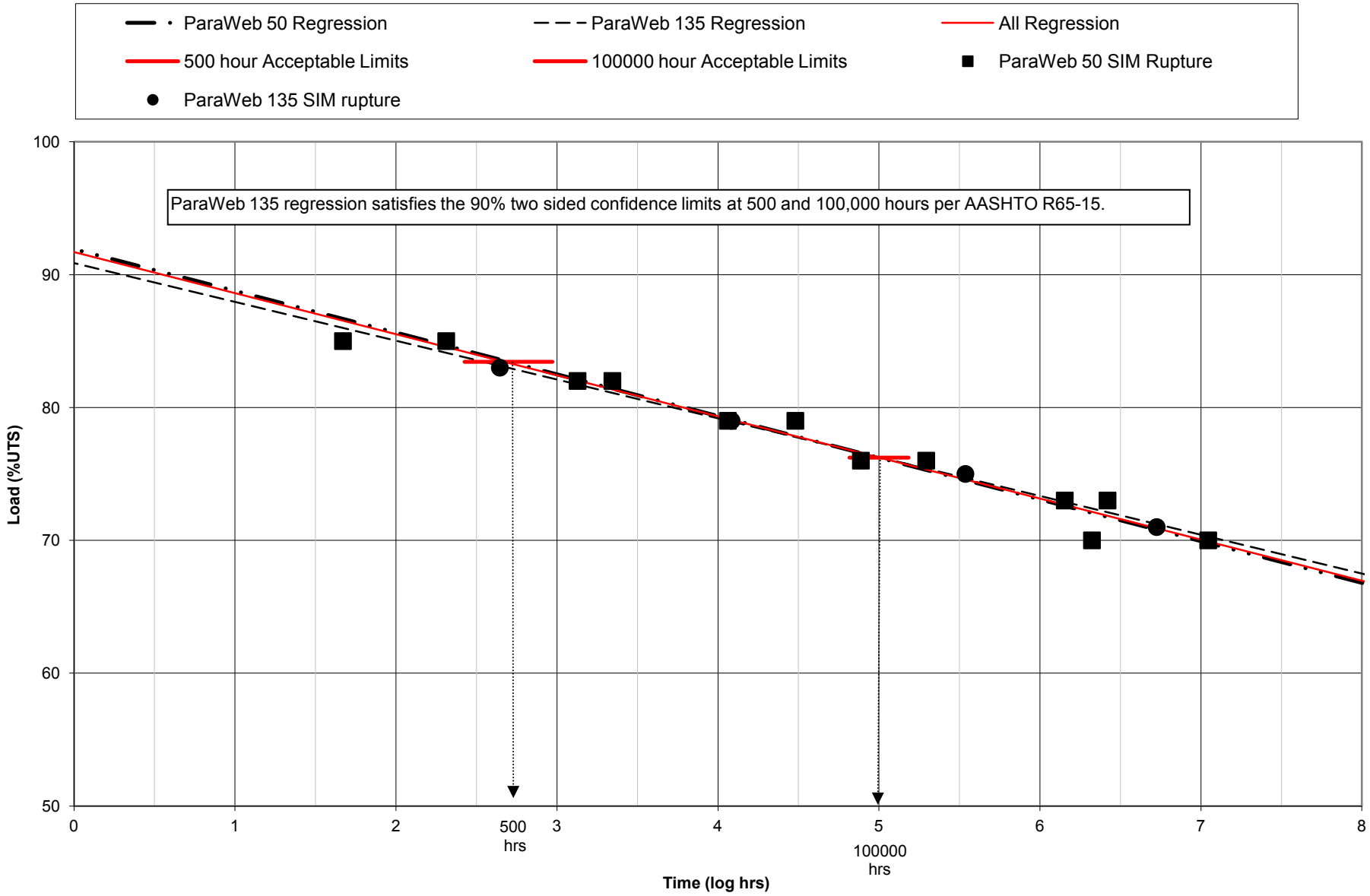

Figure F-31. Statistical evaluation results for determining validity of creating composite creep rupture envelope for the ParaWeb/ParaLink product line.

Table F-3. Computation table to determine statistical validity of creating composite creep rupture envelope for Linear Composites ParaWeb/ParaLink product line - ParaWeb 135 and ParaWeb 50 comparision.

SIM Tests on ParaWeb 135

Test Report	Product	Expected time, log hrs	%UTS	Rupture
	ParaWeb 135	6.7252	71.00	71.00
	ParaWeb 135	5.5371	75.00	75.00
	ParaWeb 135	4.0846	79.00	79.00
	ParaWeb 135	2.6451	83.00	83.00

student's t =	1.812	(90% 2-sided prediction limit)	
n-ParaWeb 135 =	4		
n-ParaWeb 50 =	12	d-o-f	10
treg =	2.699		
treg =	5.000		
P500 =	83.4488		
P100000 =	76.2232		
sigma squared =	0.1160		
sigma =	0.3406		

90% 2-sided conf. limit	
df	student's t
2	2.92
3	2.353
4	2.132
5	2.015
6	1.943
7	1.895
8	1.86
9	1.833
10	1.812
11	1.796
12	1.782
13	1.771
14	1.761

SIM & Conventional Tests on ParaWeb 50

Test Report	Product	time, log hrs	%UTS	Rupture	Runout	logti-logtbar	(logti-logtbar)2	Pi - Pbar	(Pi-Pbar)2	K * L	
	ParaWeb 50	7.0453	70.00	70.00		2.45	6.0118	-7.50	56.25	-18.3893	SIM
	ParaWeb 50	6.3231	70.00	70.00		1.73	2.9919	-7.50	56.25	-12.9728	SIM
	ParaWeb 50	6.4199	73.00	73.00		1.83	3.3361	-4.50	20.25	-8.21925	SIM
	ParaWeb 50	6.1543	73.00	73.00		1.56	2.4364	-4.50	20.25	-7.02405	SIM
	ParaWeb 50	5.2937	76.00	76.00		0.70	0.4904	-1.50	2.25	-1.05045	SIM
	ParaWeb 50	4.8878	76.00	76.00		0.29	0.0867	-1.50	2.25	-0.4416	SIM
	ParaWeb 50	4.0613	79.00	79.00		-0.53	0.2831	1.50	2.25	-0.79815	SIM
	ParaWeb 50	4.4808	79.00	79.00		-0.11	0.0127	1.50	2.25	-0.1689	SIM
	ParaWeb 50	3.1278	82.00	82.00		-1.47	2.1480	4.50	20.25	-6.5952	SIM
	ParaWeb 50	3.3442	82.00	82.00		-1.25	1.5605	4.50	20.25	-5.6214	SIM
	ParaWeb 50	2.3120	85.00	85.00		-2.28	5.2048	7.50	56.25	-17.1105	SIM
	ParaWeb 50	1.6706	85.00	85.00		-2.92	8.5428	7.50	56.25	-21.921	SIM
	ParaWeb 50										SIM
	ParaWeb 50										SIM
	ParaWeb 50										SIM
	ParaWeb 50										SIM
	ParaWeb 50										SIM
	ParaWeb 50										SIM
	Sum	55.1208	930.00		Sum	0.00	33.11	0.00	315.00	-100.31	
	Mean	4.5934	77.50								

* runout plotting below the regression line is not included in the regression

ParaWeb 50 - 500 hrs (log 2.699)			ParaWeb 50 - 100000 hrs (log 5.000)		
log tL - lower =	2.43	83.4488	log tL - lower =	4.82	76.2232
log tL - upper =	2.97	83.4488	log tL - upper =	5.18	76.2232
ParaWeb 135 - logtL @ Load =	2.54	OK	ParaWeb 135 - logtL @ Load =	5.01	OK

ParaWeb 135 - All Points
time is dependent variable:

	if time were the y axis	but time is the x axis
slope	-0.34232	-2.92124
intercept	31.10664	90.87006
R squared	0.997909	0.997909
	-2	96.71255
	10	61.65763
2.6990	82.98563	= 500 hr intercept
5.0000	76.26385	= 100000 hr intercept

ParaWeb 50 - All Points
time is dependent variable:

	if time were the y axis	but time is the x axis
slope	-0.31845	-3.14019
intercept	29.27346	91.92413
R squared	0.964949	0.964949
	-2	98.20451
	10	60.52227
2.6990	83.44877	= 500 hr intercept
5.0000	76.2232	= 100000 hr intercept

All Creep Data ParaWeb 50 & ParaWeb 135 (conv & SIM)
time is dependent variable:

	if time were the y axis	but time is the x axis
slope	-0.32326	-3.09349
intercept	29.64426	91.70419
R squared	0.971424	0.971424
	-2	97.89117
	10	60.76931
5.8176	73.70751	= 75-yr intercept
5.9425	73.32114	= 100-yr intercept

ParaWeb 50- ParaLink 300-Creep Rupture

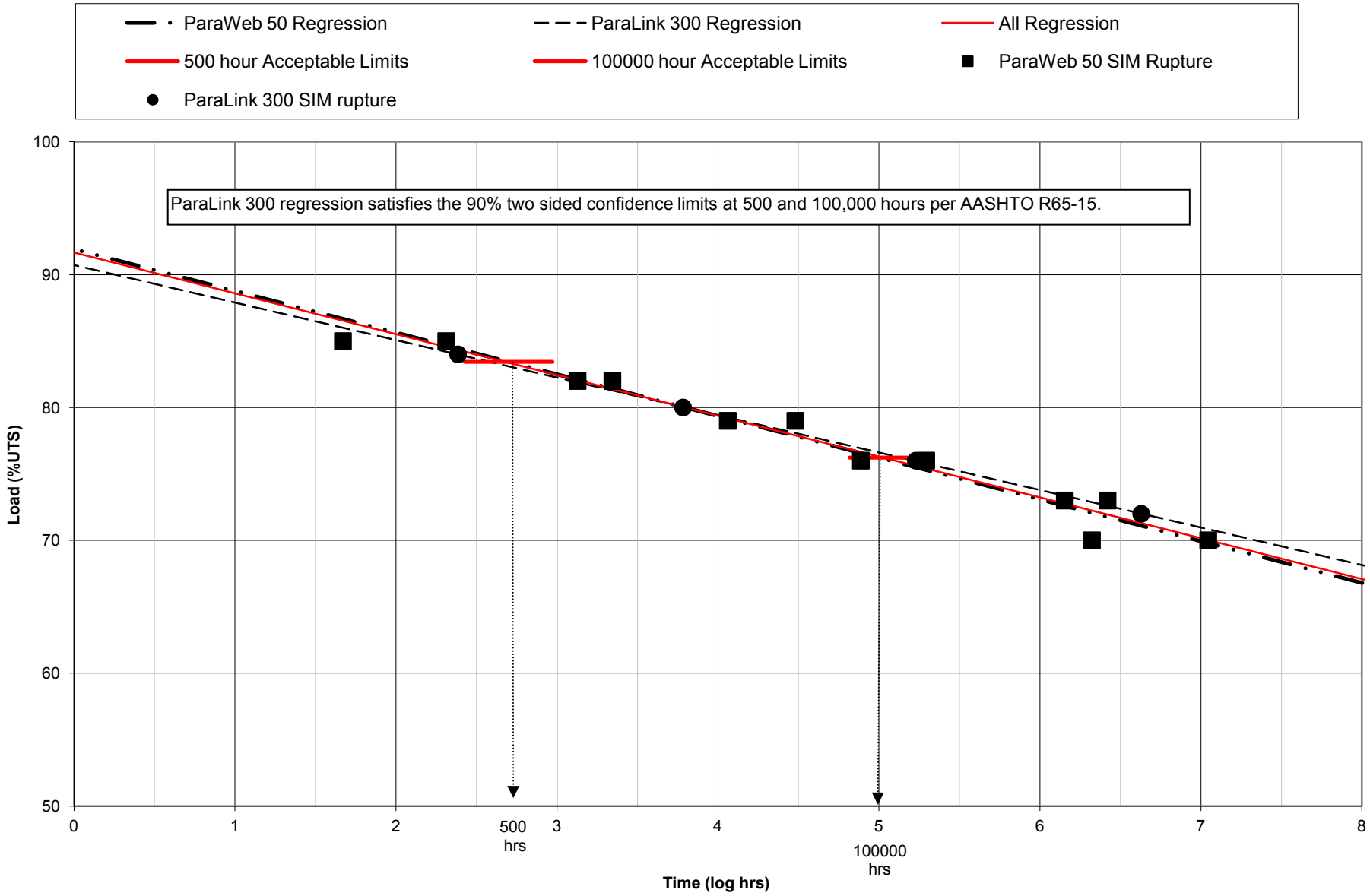

Figure F-32. Statistical evaluation results for determining validity of creating composite creep rupture envelope for the ParaWeb/ParaLink product line.

Table F-4. Computation table to determine statistical validity of creating composite creep rupture envelope for Linear Composites ParaWeb/ParaLink product line - ParaLink 300 and ParaWeb 50 comparision.

SIM Tests on ParaLink 300

Test Report	Product	Expected time, log hrs	%UTS	Rupture
	ParaLink 300	6.6291	72.00	72.00
	ParaLink 300	5.2294	76.00	76.00
	ParaLink 300	3.7831	80.00	80.00
	ParaLink 300	2.3855	84.00	84.00

student's t =	1.812	(90% 2-sided prediction limit)	
n-ParaLink 300 =	4		
n-ParaWeb 50 =	12	d-o-f	10
treg =	2.699		
treg =	5.000		
P500 =	83.4488		
P100000 =	76.2232		
sigma squared =	0.1160		
sigma =	0.3406		

90% 2-sided conf. limit	
df	student's t
2	2.92
3	2.353
4	2.132
5	2.015
6	1.943
7	1.895
8	1.86
9	1.833
10	1.812
11	1.796
12	1.782
13	1.771
14	1.761

SIM & Conventional Tests on ParaWeb 50

Test Report	Product	time, log hrs	%UTS	Rupture	Runout	logti-logtbar	(logti-logtbar)2	Pi - Pbar	(Pi-Pbar)2	K * L	
	ParaWeb 50	7.0453	70.00	70.00		2.45	6.0118	-7.50	56.25	-18.3893	SIM
	ParaWeb 50	6.3231	70.00	70.00		1.73	2.9919	-7.50	56.25	-12.9728	SIM
	ParaWeb 50	6.4199	73.00	73.00		1.83	3.3361	-4.50	20.25	-8.21925	SIM
	ParaWeb 50	6.1543	73.00	73.00		1.56	2.4364	-4.50	20.25	-7.02405	SIM
	ParaWeb 50	5.2937	76.00	76.00		0.70	0.4904	-1.50	2.25	-1.05045	SIM
	ParaWeb 50	4.8878	76.00	76.00		0.29	0.0867	-1.50	2.25	-0.4416	SIM
	ParaWeb 50	4.0613	79.00	79.00		-0.53	0.2831	1.50	2.25	-0.79815	SIM
	ParaWeb 50	4.4808	79.00	79.00		-0.11	0.0127	1.50	2.25	-0.1689	SIM
	ParaWeb 50	3.1278	82.00	82.00		-1.47	2.1480	4.50	20.25	-6.5952	SIM
	ParaWeb 50	3.3442	82.00	82.00		-1.25	1.5605	4.50	20.25	-5.6214	SIM
	ParaWeb 50	2.3120	85.00	85.00		-2.28	5.2048	7.50	56.25	-17.1105	SIM
	ParaWeb 50	1.6706	85.00	85.00		-2.92	8.5428	7.50	56.25	-21.921	SIM
	ParaWeb 50										SIM
	ParaWeb 50										SIM
	ParaWeb 50										SIM
	ParaWeb 50										SIM
	ParaWeb 50										SIM
	ParaWeb 50										SIM
	Sum	55.1208	930.00		Sum	0.00	33.11	0.00	315.00	-100.31	
	Mean	4.5934	77.50								

* runout plotting below the regression line is not included in the regression

ParaWeb 50 - 500 hrs (log 2.699)		
log tL - lower =	2.43	83.4488
log tL - upper =	2.97	83.4488
ParaLink 300 - logtL @ Load =	2.58	OK

ParaWeb 50 - 100000 hrs (log 5.000)		
log tL - lower =	4.82	76.2232
log tL - upper =	5.18	76.2232
ParaLink 300 - logtL @ Load =	5.14	OK

ParaLink 300 - All Points
time is dependent variable:

	if time were the y axis	but time is the x axis
slope	-0.35443	-2.82145
intercept	32.15212	90.71565
R squared	0.999955	0.999955
	-2	96.35855
	10	62.50113
2.6990	83.10055	= 500 hr intercept
5.0000	76.60839	= 100000 hr intercept

ParaWeb 50 - All Points
time is dependent variable:

	if time were the y axis	but time is the x axis
slope	-0.31845	-3.14019
intercept	29.27346	91.92413
R squared	0.964949	0.964949
	-2	98.20451
	10	60.52227
2.6990	83.44877	= 500 hr intercept
5.0000	76.2232	= 100000 hr intercept

All Creep Data ParaWeb 50 & ParaLink 300 (conv & SIM)
time is dependent variable:

	if time were the y axis	but time is the x axis
slope	-0.32545	-3.07267
intercept	29.83476	91.67248
R squared	0.9708	0.9708
	-2	97.81782
	10	60.94574
5.8176	73.79689	= 75-yr intercept
5.9425	73.41311	= 100-yr intercept

ParaWeb 50- ParaLink 1000-Creep Rupture

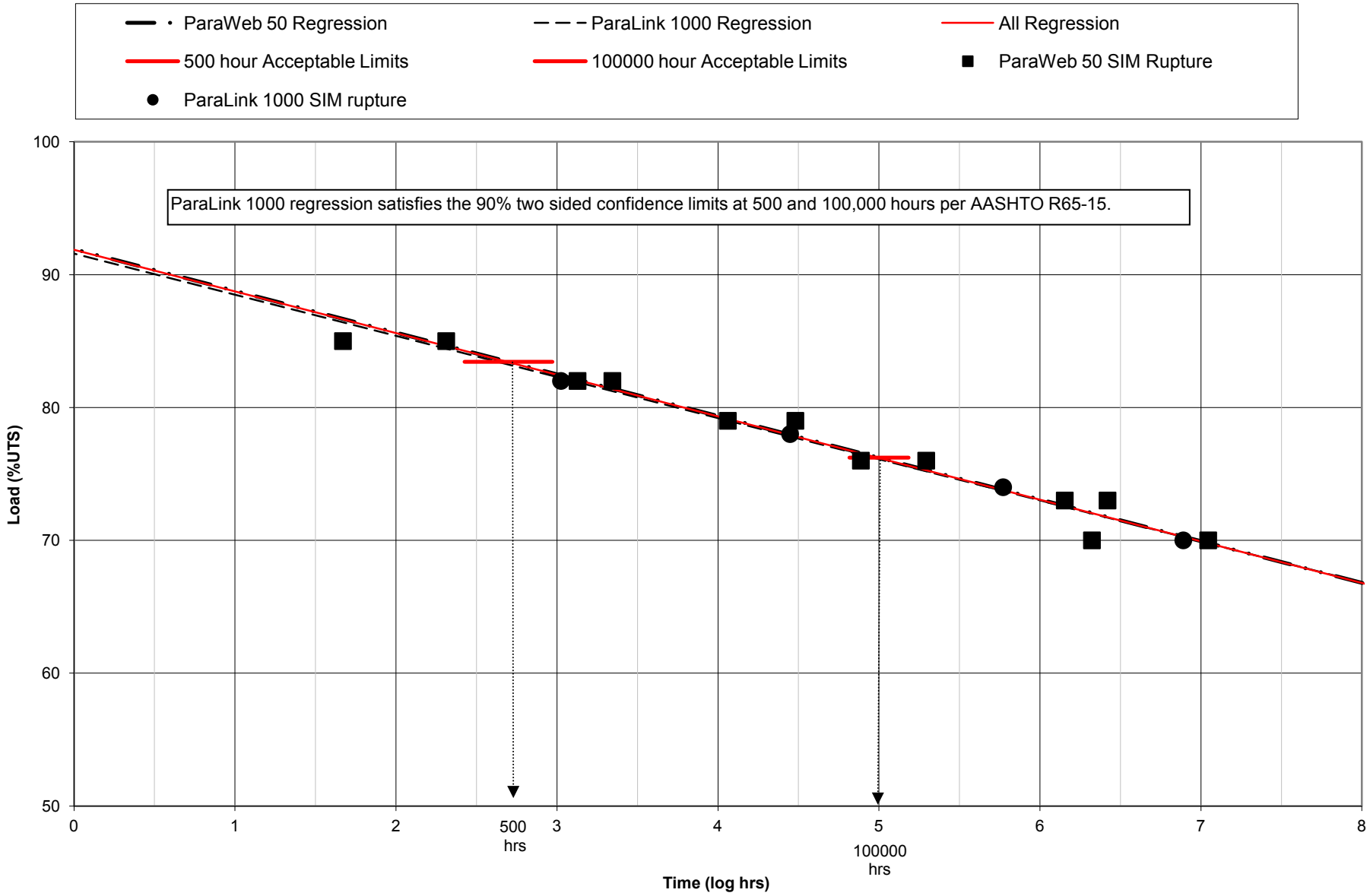

Figure F-33. Statistical evaluation results for determining validity of creating composite creep rupture envelope for the ParaWeb/ParaLink product line.

650

Table F-5. Computation table to determine statistical validity of creating composite creep rupture envelope for Linear Composites ParaWeb/ParaLink product line - ParaLink 300 and ParaWeb 50 comparision.

SIM Tests on ParaLink 300

Test Report	Product	Expected time, log hrs	%UTS	Rupture
	ParaLink 300	6.8905	70.00	70.00
	ParaLink 300	5.7714	74.00	74.00
	ParaLink 300	4.4481	78.00	78.00
	ParaLink 300	3.0249	82.00	82.00

student's t =	1.812	(90% 2-sided prediction limit)	
n-ParaLink 300 =	4		
n-ParaWeb 50 =	12	d-o-f	10
treg =	2.699		
treg =	5.000		
P500 =	83.4488		
P100000 =	76.2232		
sigma squared =	0.1160		
sigma =	0.3406		

90% 2-sided conf. limit	
df	student's t
2	2.92
3	2.353
4	2.132
5	2.015
6	1.943
7	1.895
8	1.86
9	1.833
10	1.812
11	1.796
12	1.782
13	1.771
14	1.761

SIM & Conventional Tests on ParaWeb 50

Test Report	Product	time, log hrs	%UTS	Rupture	Runout	logti-logtbar	(logti-logtbar)2	Pi - Pbar	(Pi-Pbar)2	K * L	
	ParaWeb 50	7.0453	70.00	70.00		2.45	6.0118	-7.50	56.25	-18.3893	SIM
	ParaWeb 50	6.3231	70.00	70.00		1.73	2.9919	-7.50	56.25	-12.9728	SIM
	ParaWeb 50	6.4199	73.00	73.00		1.83	3.3361	-4.50	20.25	-8.21925	SIM
	ParaWeb 50	6.1543	73.00	73.00		1.56	2.4364	-4.50	20.25	-7.02405	SIM
	ParaWeb 50	5.2937	76.00	76.00		0.70	0.4904	-1.50	2.25	-1.05045	SIM
	ParaWeb 50	4.8878	76.00	76.00		0.29	0.0867	-1.50	2.25	-0.4416	SIM
	ParaWeb 50	4.0613	79.00	79.00		-0.53	0.2831	1.50	2.25	-0.79815	SIM
	ParaWeb 50	4.4808	79.00	79.00		-0.11	0.0127	1.50	2.25	-0.1689	SIM
	ParaWeb 50	3.1278	82.00	82.00		-1.47	2.1480	4.50	20.25	-6.5952	SIM
	ParaWeb 50	3.3442	82.00	82.00		-1.25	1.5605	4.50	20.25	-5.6214	SIM
	ParaWeb 50	2.3120	85.00	85.00		-2.28	5.2048	7.50	56.25	-17.1105	SIM
	ParaWeb 50	1.6706	85.00	85.00		-2.92	8.5428	7.50	56.25	-21.921	SIM
	ParaWeb 50										SIM
	ParaWeb 50										SIM
	ParaWeb 50										SIM
	ParaWeb 50										SIM
	ParaWeb 50										SIM
	ParaWeb 50										SIM
	Sum	55.1208	930.00		Sum	0.00	33.11	0.00	315.00	-100.31	
	Mean	4.5934	77.50								

* runout plotting below the regression line is not included in the regression

ParaWeb 50 - 500 hrs (log 2.699)		
log tL - lower =	2.43	83.4488
log tL - upper =	2.97	83.4488
ParaLink 300 - logtL @ Load =	2.63	OK

ParaWeb 50 - 100000 hrs (log 5.000)		
log tL - lower =	4.82	76.2232
log tL - upper =	5.18	76.2232
ParaLink 300 - logtL @ Load =	4.96	OK

ParaLink 300 - All Points
time is dependent variable:

	if time were the y axis	but time is the x axis	
slope	-0.323	-3.09595	
intercept	29.58192	91.58417	
R squared	0.997173	0.997173	
	-2	97.77607	
	10	60.62465	
2.6990	83.22819	= 500 hr intercept	
5.0000	76.10441	= 100000 hr intercept	

ParaWeb 50 - All Points
time is dependent variable:

	if time were the y axis	but time is the x axis	
slope	-0.31845	-3.14019	
intercept	29.27346	91.92413	
R squared	0.964949	0.964949	
	-2	98.20451	
	10	60.52227	
2.6990	83.44877	= 500 hr intercept	
5.0000	76.2232	= 100000 hr intercept	

All Creep Data ParaWeb 50 & ParaLink 300 (conv & SIM)
time is dependent variable:

	if time were the y axis	but time is the x axis	
slope	-0.31894	-3.13539	
intercept	29.30173	91.87223	
R squared	0.97171	0.97171	
	-2	98.143	
	10	60.51837	
5.8176	73.63181	= 75-yr intercept	
5.9425	73.2402	= 100-yr intercept	

Table F-6. Computation table for composite creep rupture envelope for the Linear Composites ParaWeb / ParaLink product line.

		Stress, % of UTS											
		data for regression calculation							sim	rlt	conv"l	sim	conv'l
product:		loghrs	all	ParaWeb 30	ParaWeb 135	ParaWeb 50	ParaLink 300	ParaLink 1000	rupture	rupture	rupture	runout*	runout*
SIM DATA:	ParaWeb 30	6.9671	70.00	70.00					70.00				
	ParaWeb 30	5.7666	75.00	75.00					75.00				
	ParaWeb 30	3.6362	80.00	80.00					80.00				
	ParaWeb 30	2.1750	85.00	85.00					85.00				
	ParaWeb 135	6.7252	71.00		71.00				71.00				
	ParaWeb 135	5.5371	75.00		75.00				75.00				
	ParaWeb 135	4.0846	79.00		79.00				79.00				
	ParaWeb 135	2.6451	83.00		83.00				83.00				
	ParaLink 300	6.6291	72.00				72.00		72.00				
	ParaLink 300	5.2294	76.00				76.00		76.00				
	ParaLink 300	3.7831	80.00				80.00		80.00				
	ParaLink 300	2.3855	84.00				84.00		84.00				
	ParaLink 1000	6.8905	70.00					70.00	70.00				
	ParaLink 1000	5.7714	74.00					74.00	74.00				
	ParaLink 1000	4.4481	78.00					78.00	78.00				
	ParaLink 1000	3.0249	82.00					82.00	82.00				
	ParaWeb 50	7.0453	70.00			70.00			70.00				
	ParaWeb 50	6.3231	70.00			70.00			70.00				
	ParaWeb 50	6.4199	73.00			73.00			73.00				
	ParaWeb 50	6.1543	73.00			73.00			73.00				
	ParaWeb 50	5.2937	76.00			76.00			76.00				
	ParaWeb 50	4.8878	76.00			76.00			76.00				
	ParaWeb 50	4.0613	79.00			79.00			79.00				
	ParaWeb 50	4.4808	79.00			79.00			79.00				
	ParaWeb 50	3.1278	82.00			82.00			82.00				
	ParaWeb 50	3.3442	82.00			82.00			82.00				
	ParaWeb 50	2.3120	85.00			85.00			85.00				
	ParaWeb 50	1.6706	85.00			85.00			85.00				

NOTE: Don't include runouts in the regression calculation unless the points lie above the line

SIM Only - ParaWeb 30
time is dependent variable:

	if time were the y axis	but time is the x axis
slope	-0.330134	-3.029073
intercept	30.22161	91.543464
R squared	0.98948	0.9894797
	-2	97.60161
	10	61.252734
6	73.36903	= 114 Year intercept
5.817863	73.92073	= 75 Year intercept

SIM Only - ParaWeb 135
time is dependent variable:

	if time were the y axis	but time is the x axis
slope	-0.34232	-2.92124
intercept	31.10664	90.87006
R squared	0.997909	0.997909
	-2	96.71255
	10	61.65763
6	73.3426	= 114 Year intercept
5.817863	73.87467	= 75 Year intercept

SIM Only - ParaWeb 50
time is dependent variable:

	if time were the y axis	but time is the x axis
slope	-0.318452	-3.140187
intercept	29.27346	91.924135
R squared	0.964949	0.9649491
	-2	98.204508
	10	60.522265
5.999706	73.08394	= 114 Year intercept
5.817863	73.65496	= 75 Year intercept

SIM Only - ParaLink 300
time is dependent variable:

	if time were the y axis	but time is the x axis
slope	-0.35443	-2.82145
intercept	32.15212	90.71565
R squared	0.999955	0.999955
	-2	96.35855
	10	62.50113
6	73.78694	= 114 Year intercept
5.817863	74.30083	= 75 Year intercept

SIM Only - All
time is dependent variable:

	if time were the y axis	but time is the x axis
slope	-0.327398	-3.0544
intercept	29.97534	91.5562
R squared	0.98021	0.9802
	-2	97.664968
	10	61.01236
6.000	73.23	= 114 Year intercept
5.943	73.40	= 100 Year intercept
5.818	73.79	= 75 Year intercept
4.420	78.06	= 3 Year intercept

SIM Only - ParaLink 1000
time is dependent variable:

	if time were the y axis	but time is the x axis
slope	-0.323	-3.09595
intercept	29.58192	91.58417
R squared	0.997173	0.997173
	-2	97.77607
	10	60.62465
6	73.00846	= 114 Year intercept
5.817863	73.57235	= 75 Year intercept

The regression for the all creep tests on the primary product (ParaWeb 50) produced log 2.699 hr (500 hrs) and log 5.000 hr (100,000 hrs) intercepts at 83.45% and 76.22% UTS, respectively. The regression for the creep tests on ParaWeb 30, ParaWeb 135, ParaLink 300 and ParaLink 1000 produced log time intercepts for the same %UTS within the 90% confidence limits of log 2.43 to log 2.97 and log 4.82 to log 5.18 associated with those %UTS. This evaluation is summarized in Table F-7. Thus, the primary, ParaWeb 50, and secondary products, ParaWeb 30, ParaWeb 135, ParaLink 300 and ParaLink 1000, data may be used together to construct the characteristic creep rupture curve of the family of products. Confidence limits satisfied per R69-15.

Table F-7. Summary of statistical comparison between rupture envelopes for all tested ParaWeb/ParaLink products, to test validity of composite creep rupture envelope for product line.

Product	Intercept at log 2.699 & 5.000 hrs, %UTS	Intercept at same % UTS, log hrs	90% Confidence Limits @ Higher %UTS, log hrs	90% Confidence Limits @ Lower %UTS, log hrs
ParaWeb 50	83.45 & 76.22	2.699 & 5.000	-	-
ParaWeb 30	-	2.67 & 5.06	2.43 to 2.97	4.82 to 5.18
ParaWeb 135	-	2.54 & 5.01	2.43 to 2.97	4.82 to 5.18
ParaLink 300	-	2.58 & 5.14	2.43 to 2.97	4.82 to 5.18
ParaLink 1000	-	2.63 & 4.96	2.43 to 2.97	4.82 to 5.18

Appendix G: Durability Detailed Test Results

Table G-1. Yarn test results to evaluate susceptibility to hydrolysis

Material: Polyester Yarn
Product Identification: ParaWeb 30

PARAMETER	TEST REPLICATE NUMBER 1	2	3	MEAN	STD. DEV.
Carboxyl End Group (CEG) Count (Test Method: GRI GG7)					
mmol/Kg	15.3	16.0	16.4	**15.9**	0.6
Molecular Weight (Test Method: GRI GG8)					
Mn (Number average molecular weight)	38,358	33,081	31,930	**34,456**	3,428

The testing herein is based upon accepted industry practice as well as the test method listed. Test results reported herein do not apply to samples other than those tested.

Table G-2. UV resistance test results of ParaWeb 30.

PARAMETER	TEST REPLICATE NUMBER 1	2	3	4	5	MEAN	STD. DEV.	PERCENT RETAINED
UV Resistance (ASTM D 4355)								
Strength Retained measured via single strip tensile (ASTM D 6637, Method A, mod.)								
MD - Tensile Strength (lbs) - B	6870	6694	6725	6758	6778	**6765**	67	
MD - Tensile Strength (kN) - B	30.6	29.8	29.9	30.1	30.2	**30.1**	0.3	
MD - Tensile Strength (lbs) - E	6326	6224	6288	6222	6310	**6274**	48	**93**
MD - Tensile Strength (kN) - E	28.2	27.7	28.0	27.7	28.1	**27.9**	0.2	
MD - Elong. @ Max. Load (%) - B	11.1	10.2	10.8	10.3	10.4	**10.6**	0.4	
MD - Elong. @ Max. Load (%) - E	12.0	11.3	11.5	12.3	12.2	**11.9**	0.4	**112**

B - Baseline Unexposed
E - Exposed for 500 hours of ASTM D 4355 Cycle

MD - Machine Direction TD - Transverse/Cross Machine Direction

The testing herein is based upon accepted industry practice as well as the test method listed. Test results reported herein do not apply to samples other than those tested.

Table G-3. Summary of UV resistance test results for ParaWeb/ParaLink.

Product Style	Mean Baseline Tensile Strength (lb/rib)	Standard Deviation (lb/rib)	Mean Exposed Tensile Strength (lb/rib)	Standard Deviation (lb/rib)	% Strength Retained
ParaWeb 30	6,765	67	6,274	48	93

(Conversion: 1 lb/ft = 0.0146 kN/m)

Appendix H: Creep Stiffness Detailed Test Results

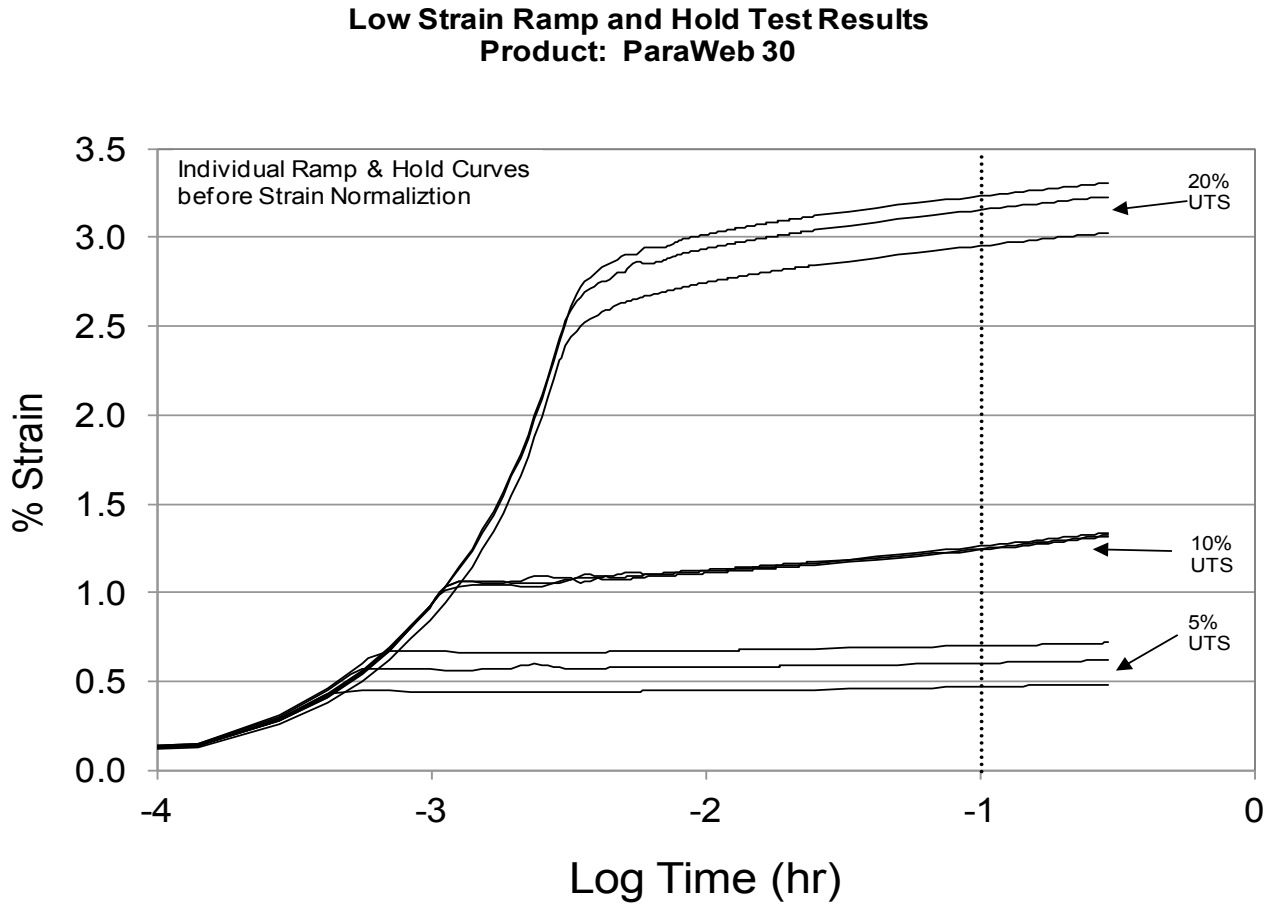

Figure H-1. Low strain ramp and hold tests for ParaWeb 30, before strain normalization.

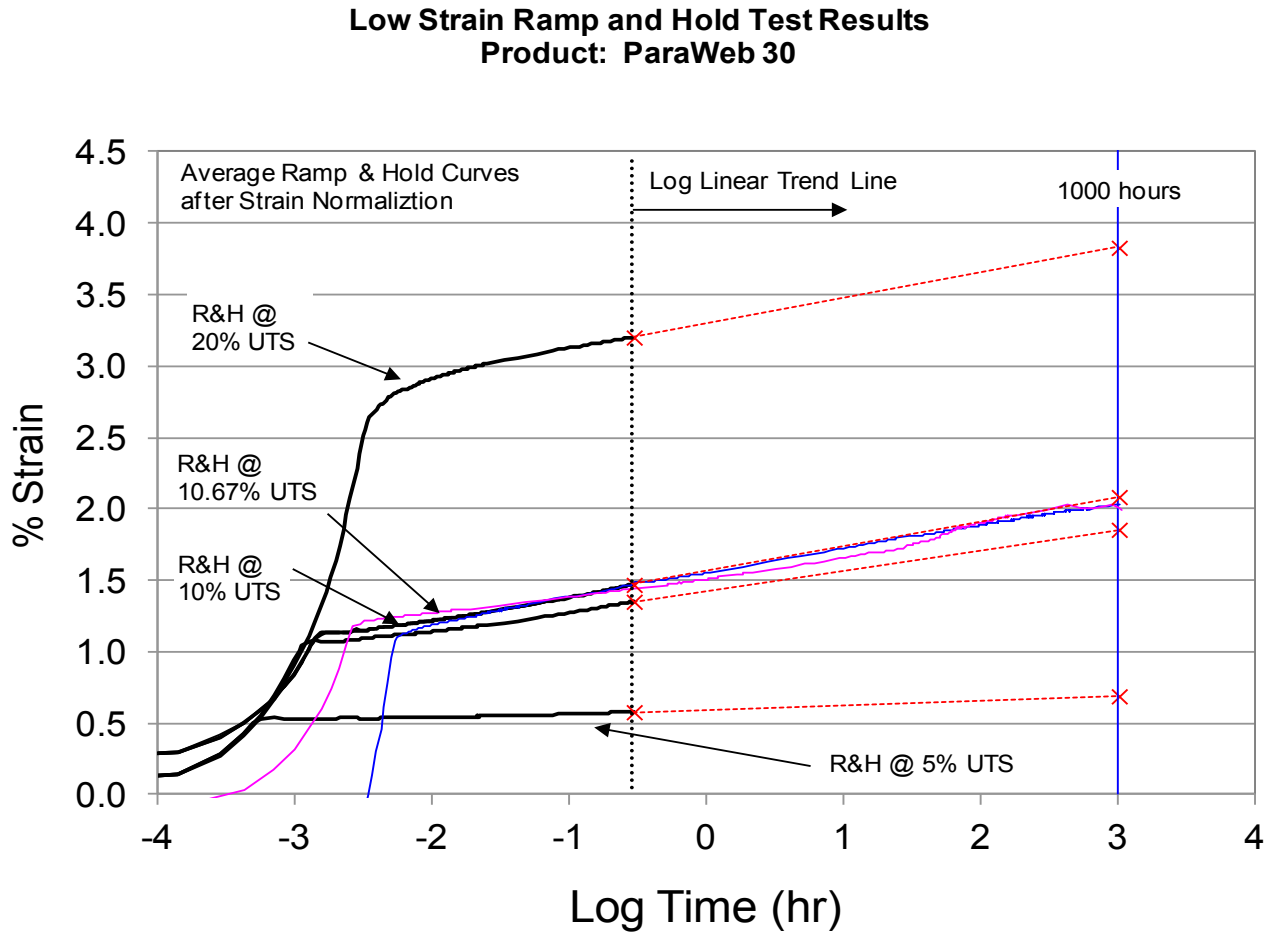

Figure H-2. Low strain ramp and hold tests for ParaWeb 30, after strain normalization, with 1000 hour low strain creep tests.

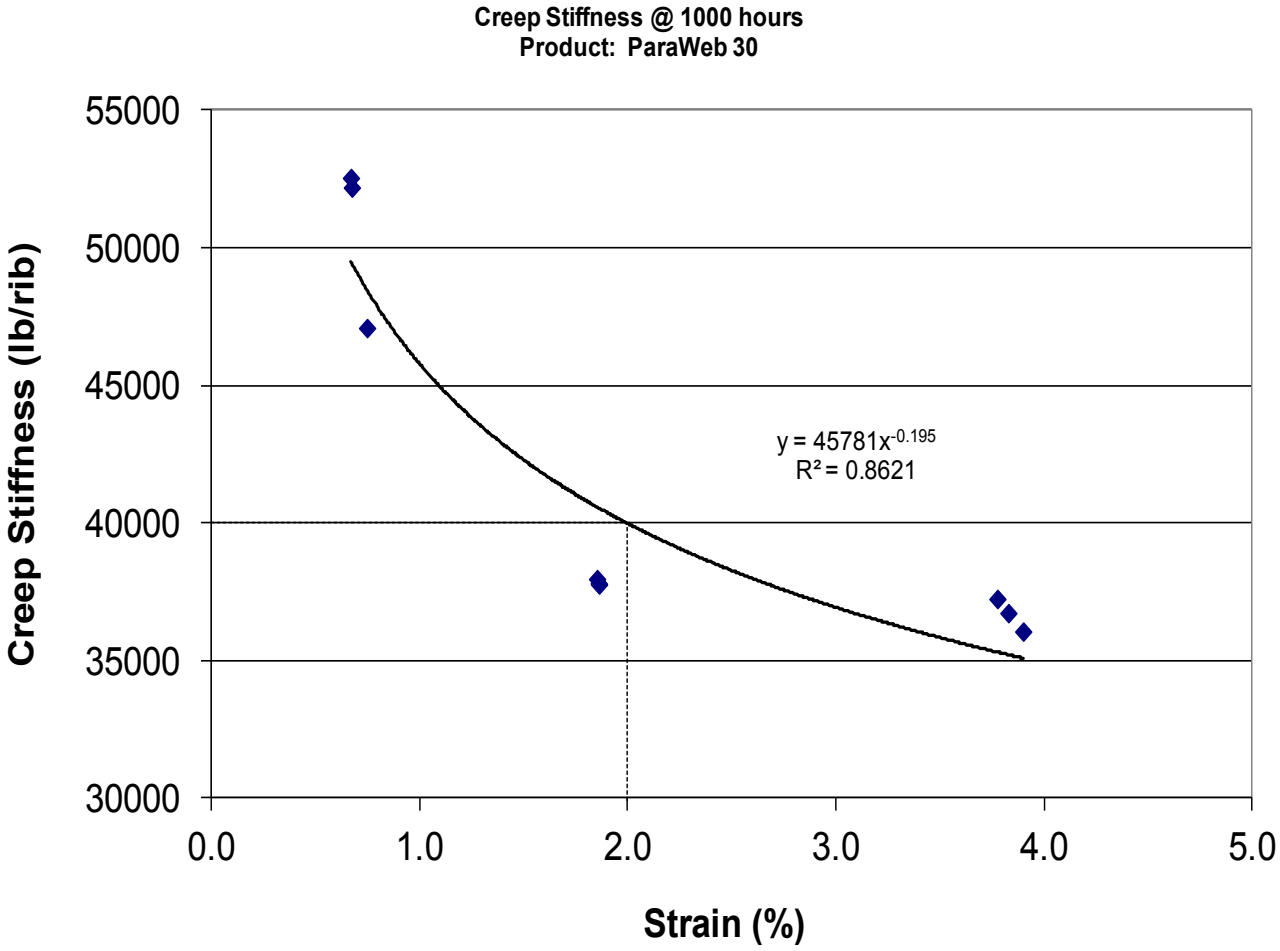

Figure H-3. Creep stiffness versus strain at 1,000 hours for ParaWeb 30.

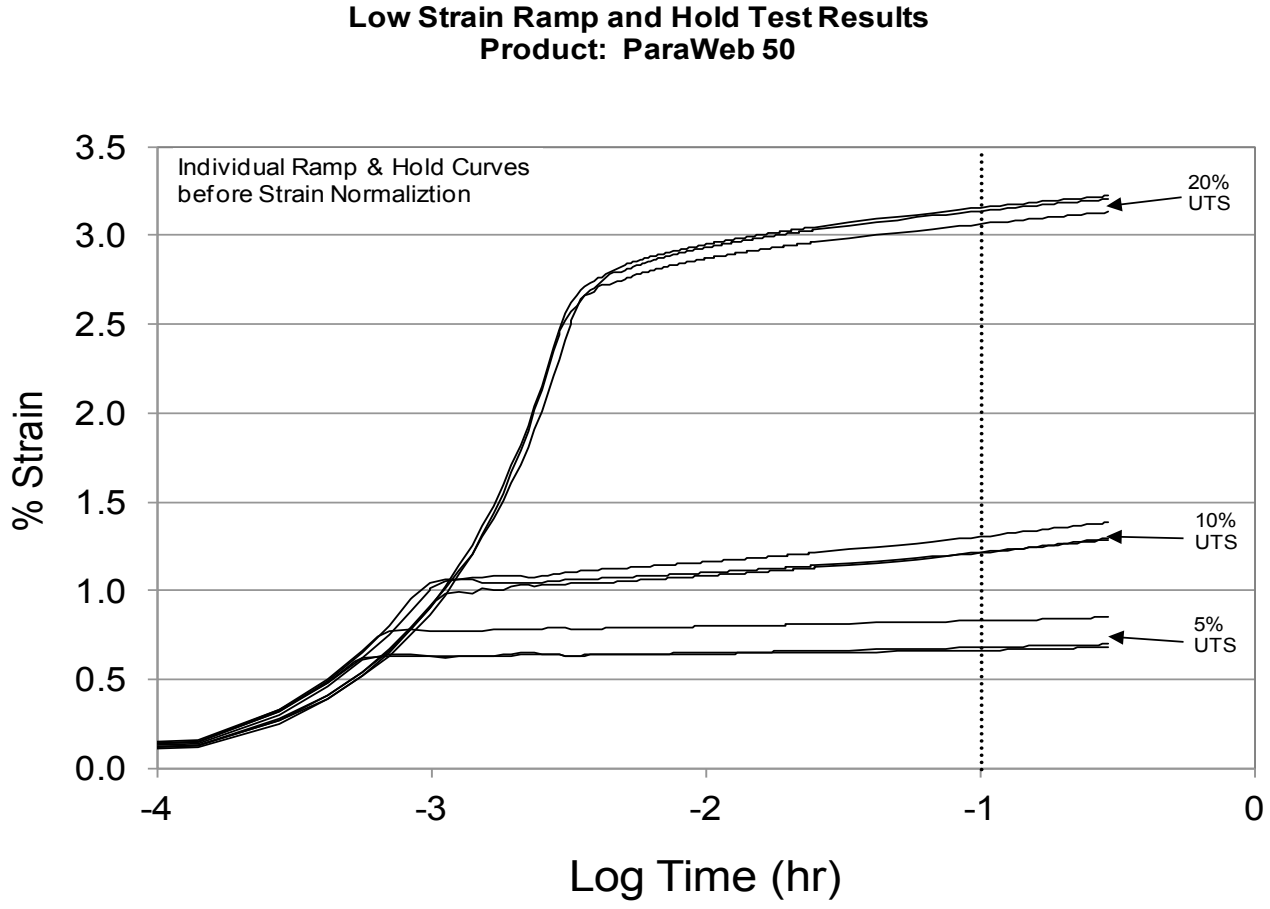

Figure H-4. Low strain ramp and hold tests for ParaWeb 50, before strain normalization.

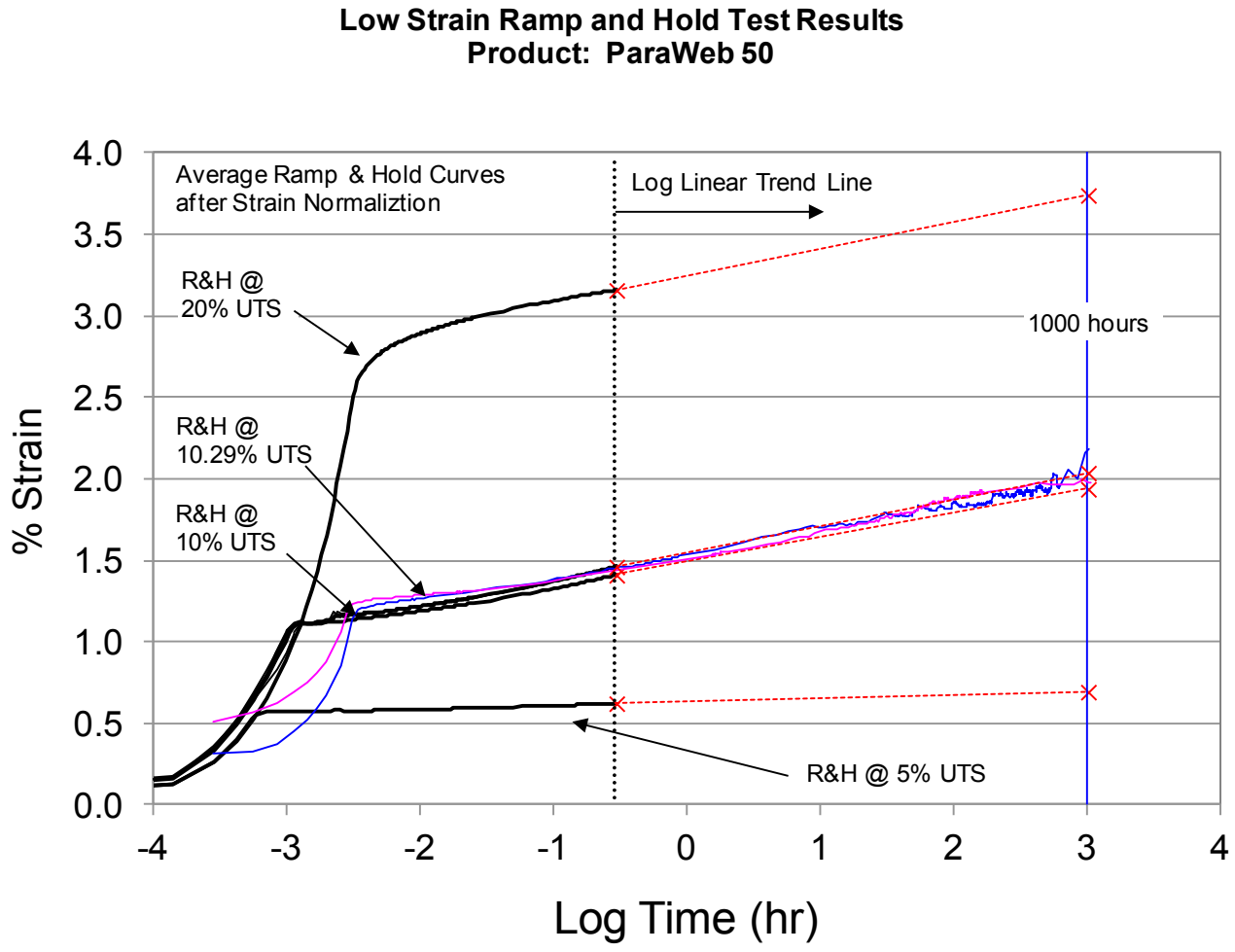

Figure H-5. Low strain ramp and hold tests for ParaWeb 50, after strain normalization, with 1000 hour low strain creep tests.

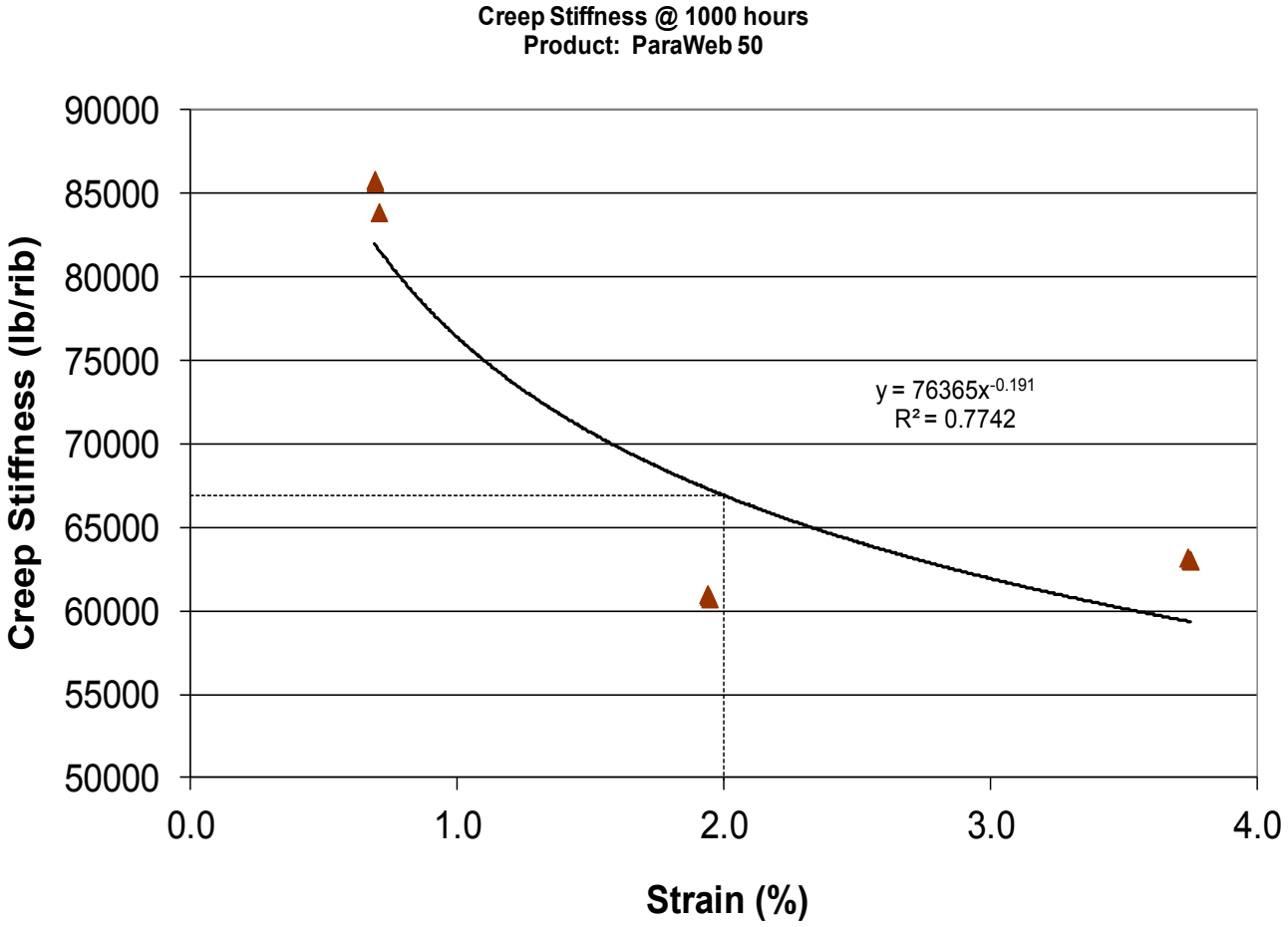

Figure H-6. Creep stiffness versus strain at 1,000 hours for ParaWeb 50.

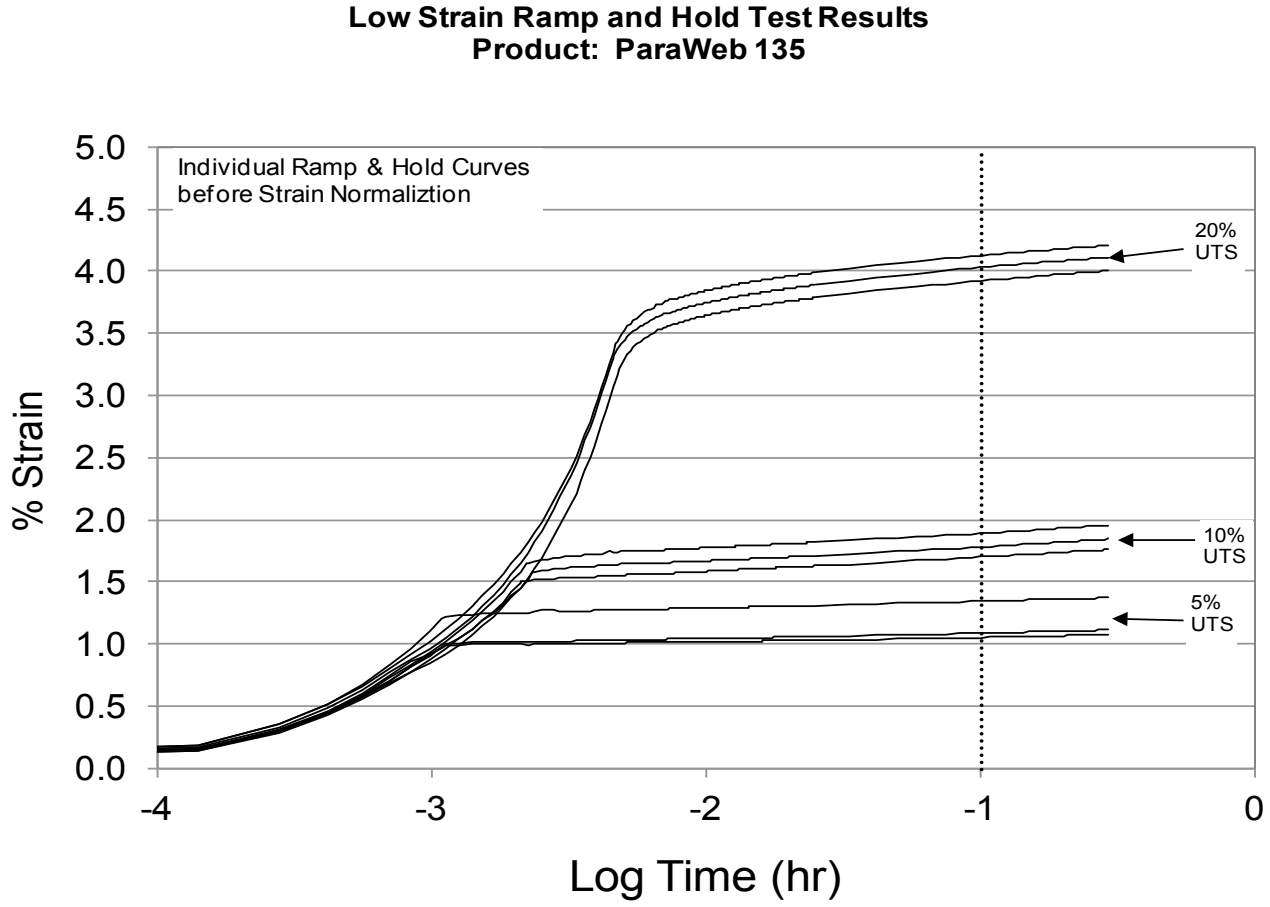

Figure H-7. Low strain ramp and hold tests for ParaWeb 135, before strain normalization.

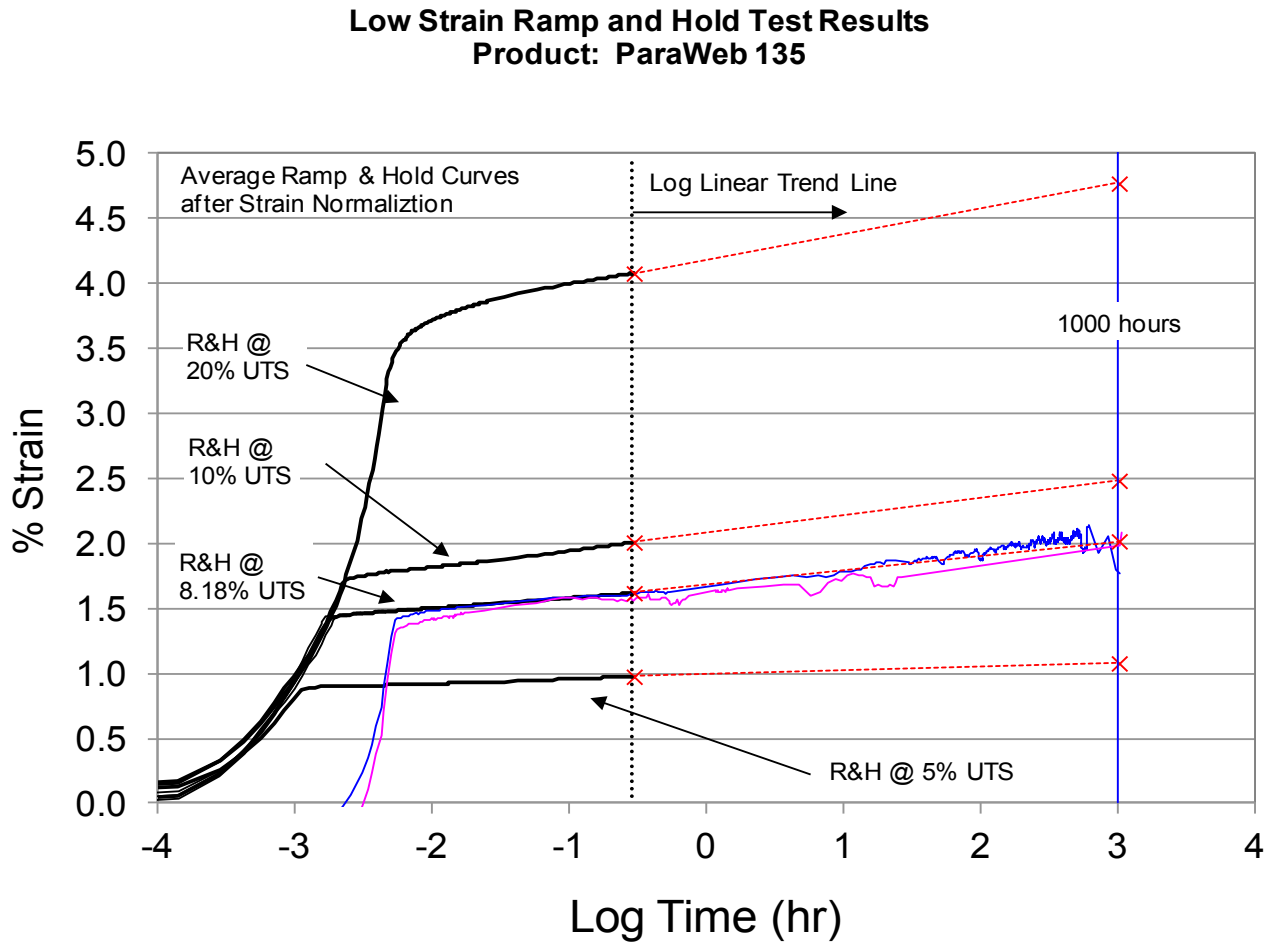

Figure H-8. Low strain ramp and hold tests for ParaWeb 135, after strain normalization, with 1000 hour low strain creep tests.

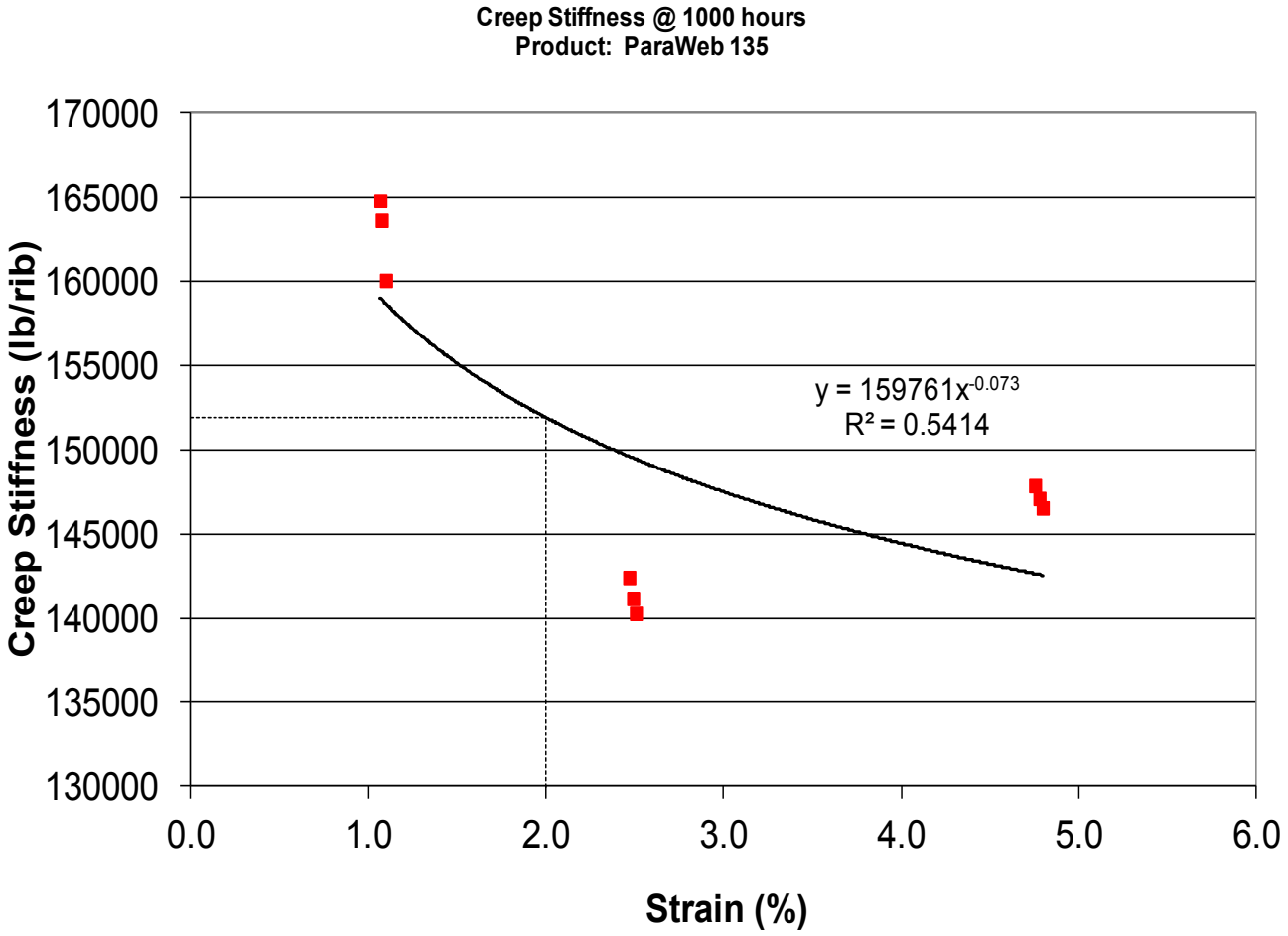

Figure H-9. Creep stiffness versus strain at 1,000 hours for ParaWeb 135.

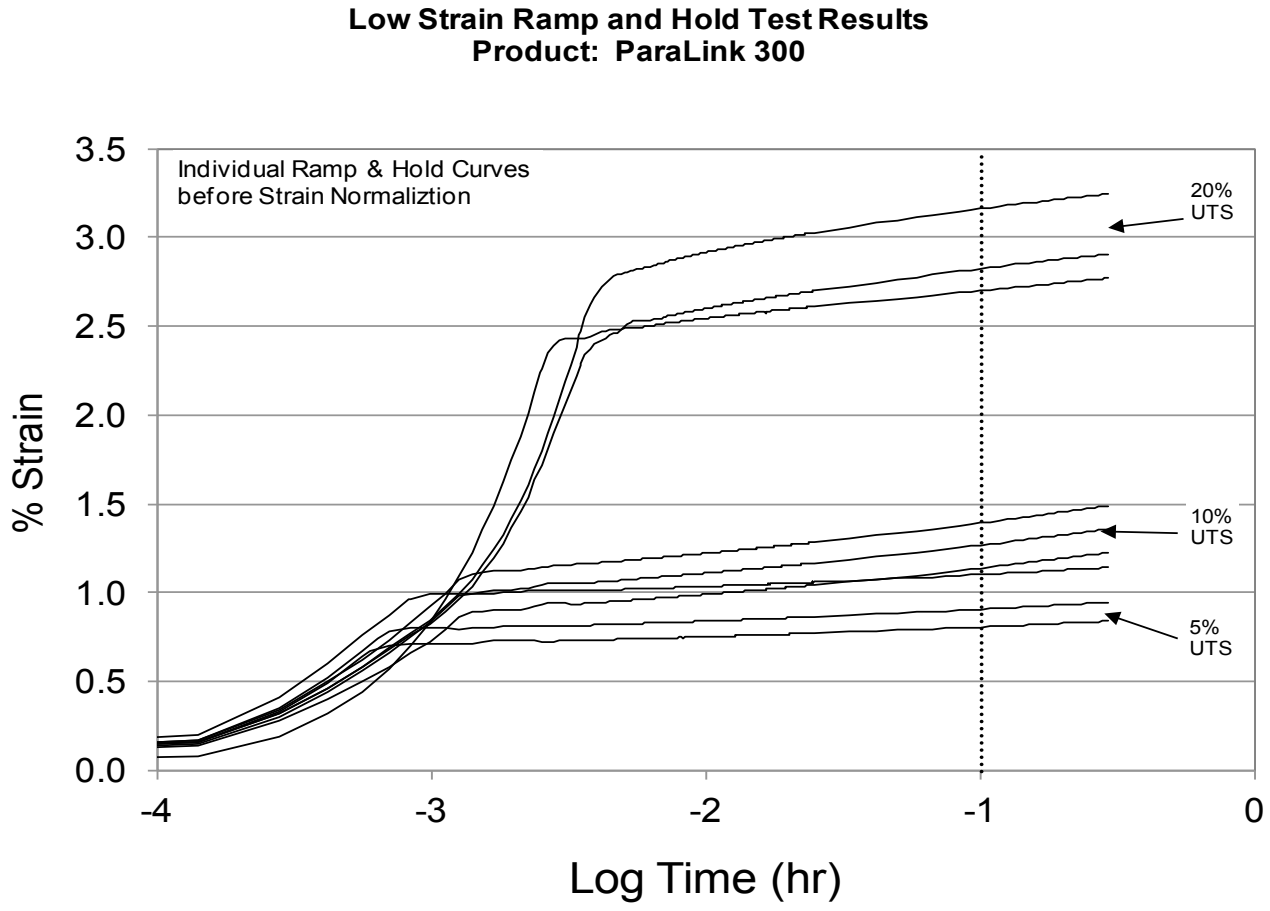

Figure H-10. Low strain ramp and hold tests for ParaLink 300, before strain normalization.

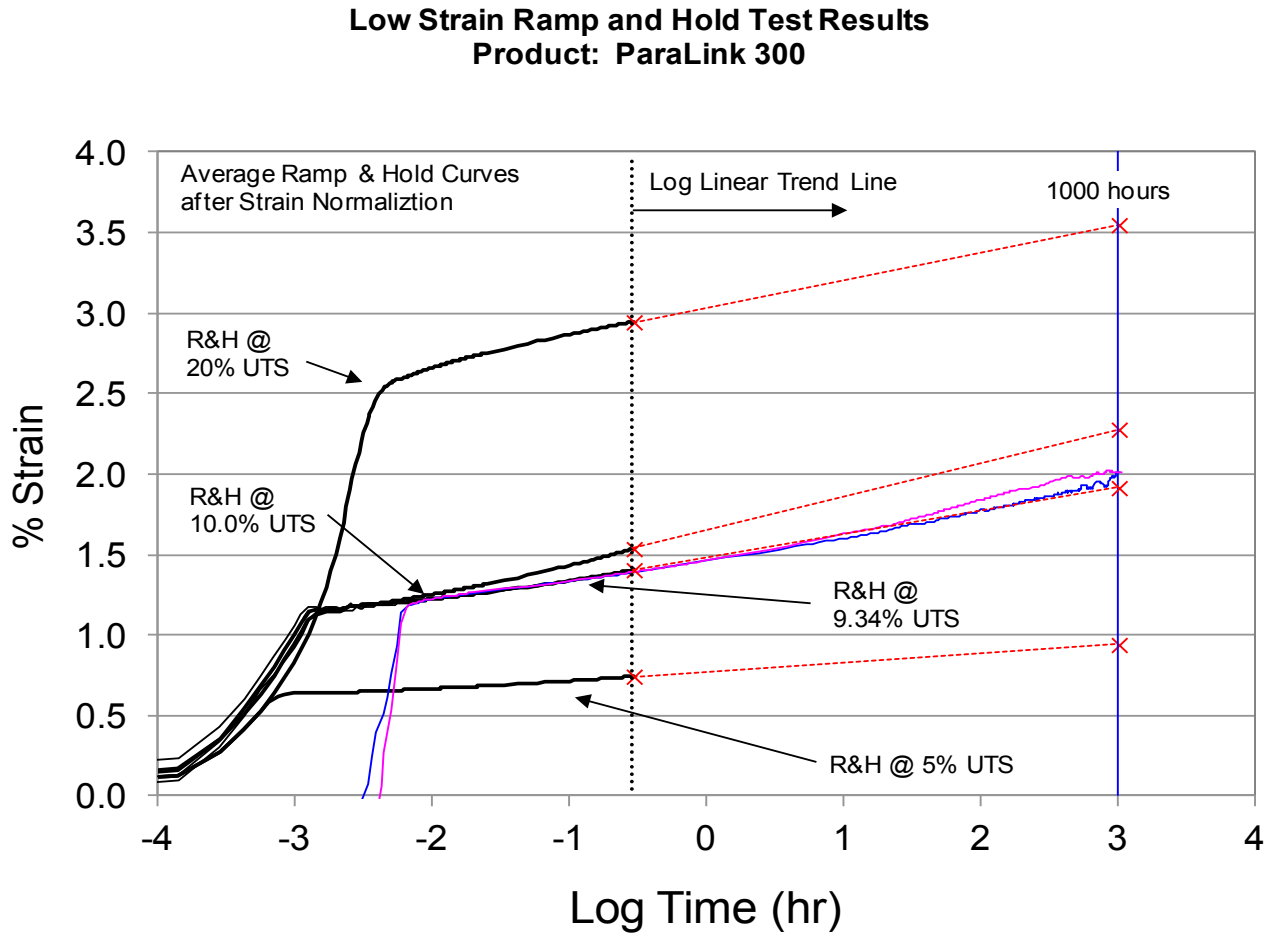

Figure H-11. Low strain ramp and hold tests for ParaLink 300, after strain normalization, with 1000 hour low strain creep tests.

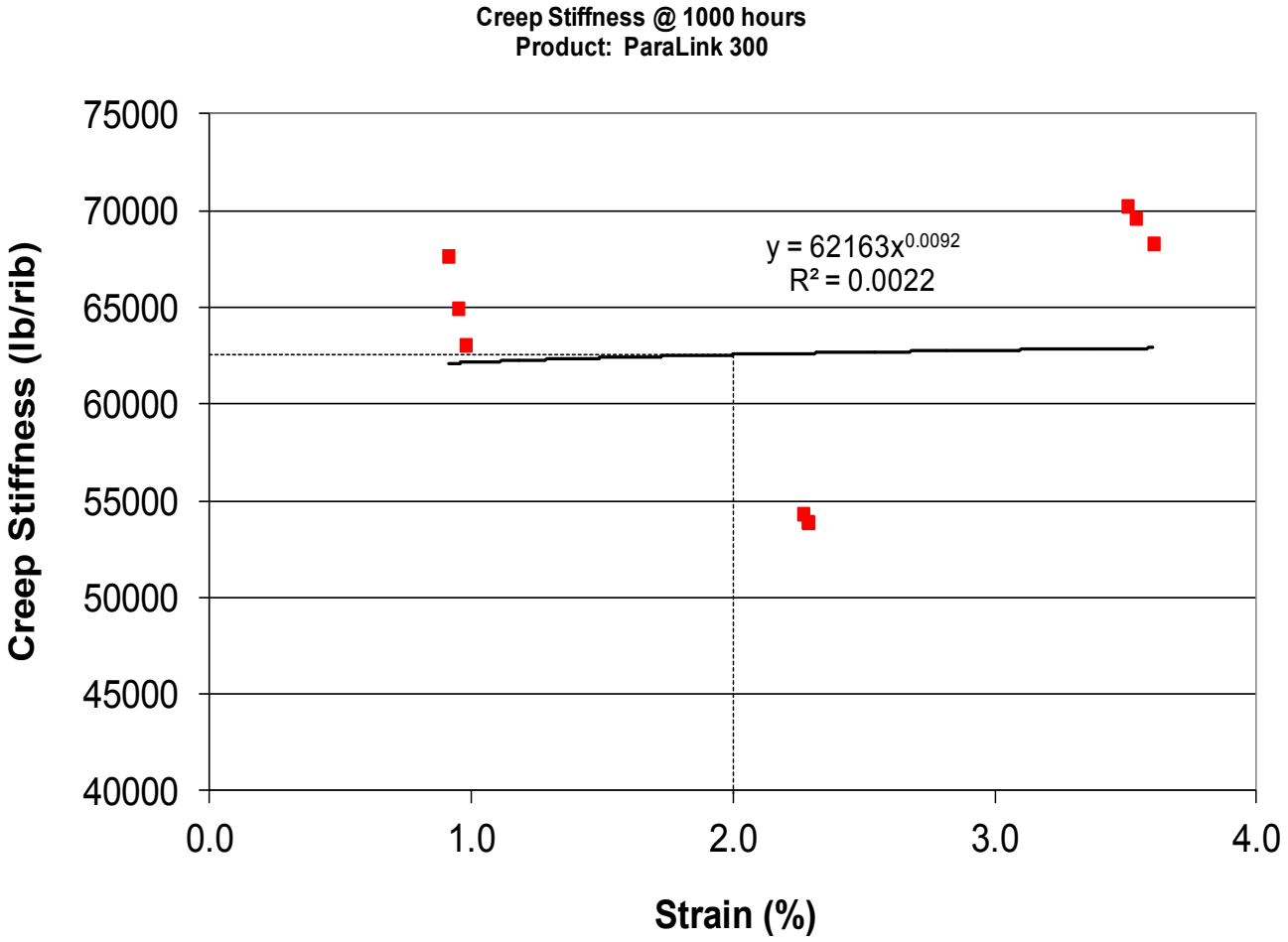

Figure H-12. Creep stiffness versus strain at 1,000 hours for ParaLink 300.

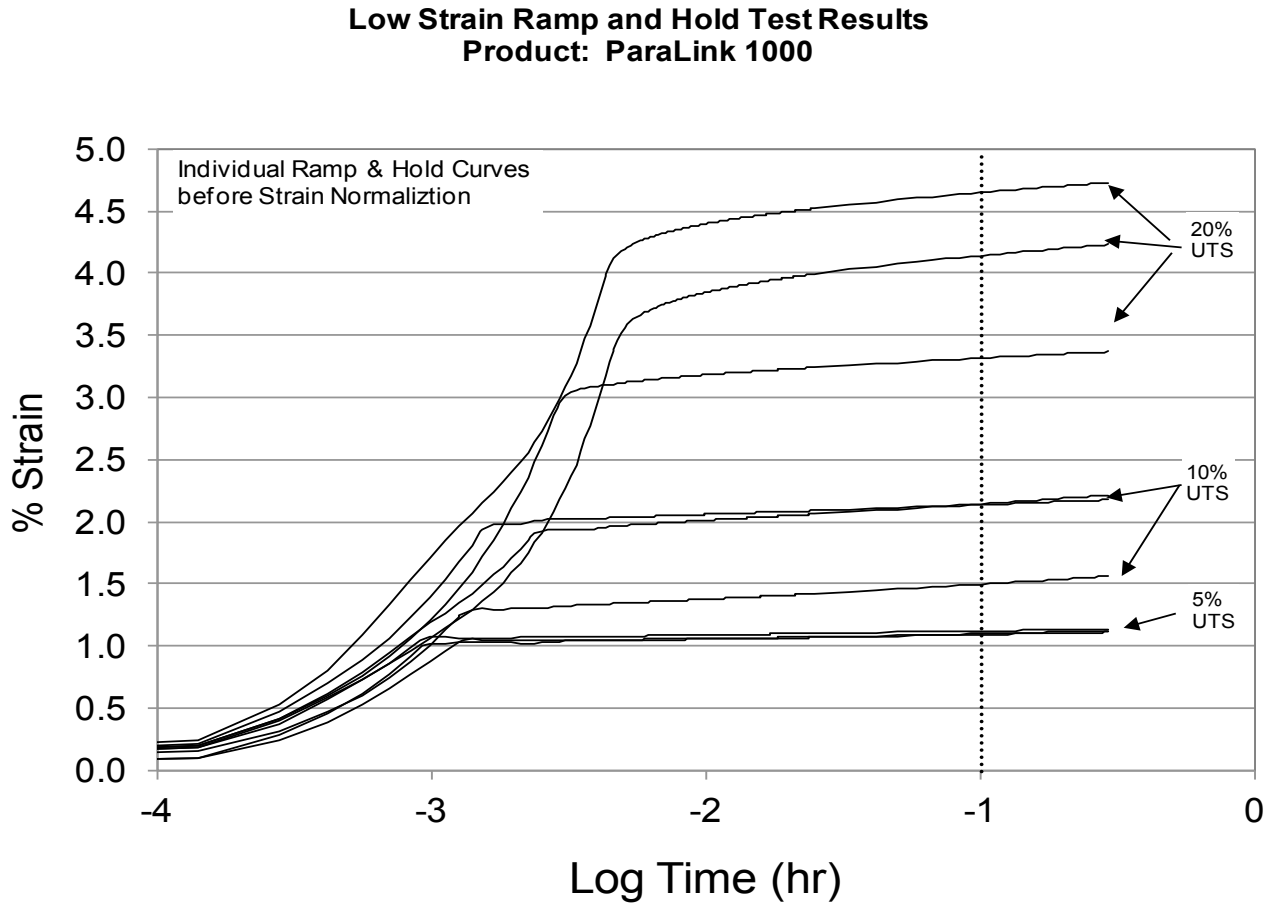

Figure H-13. Low strain ramp and hold tests for ParaLink 1000, before strain normalization.

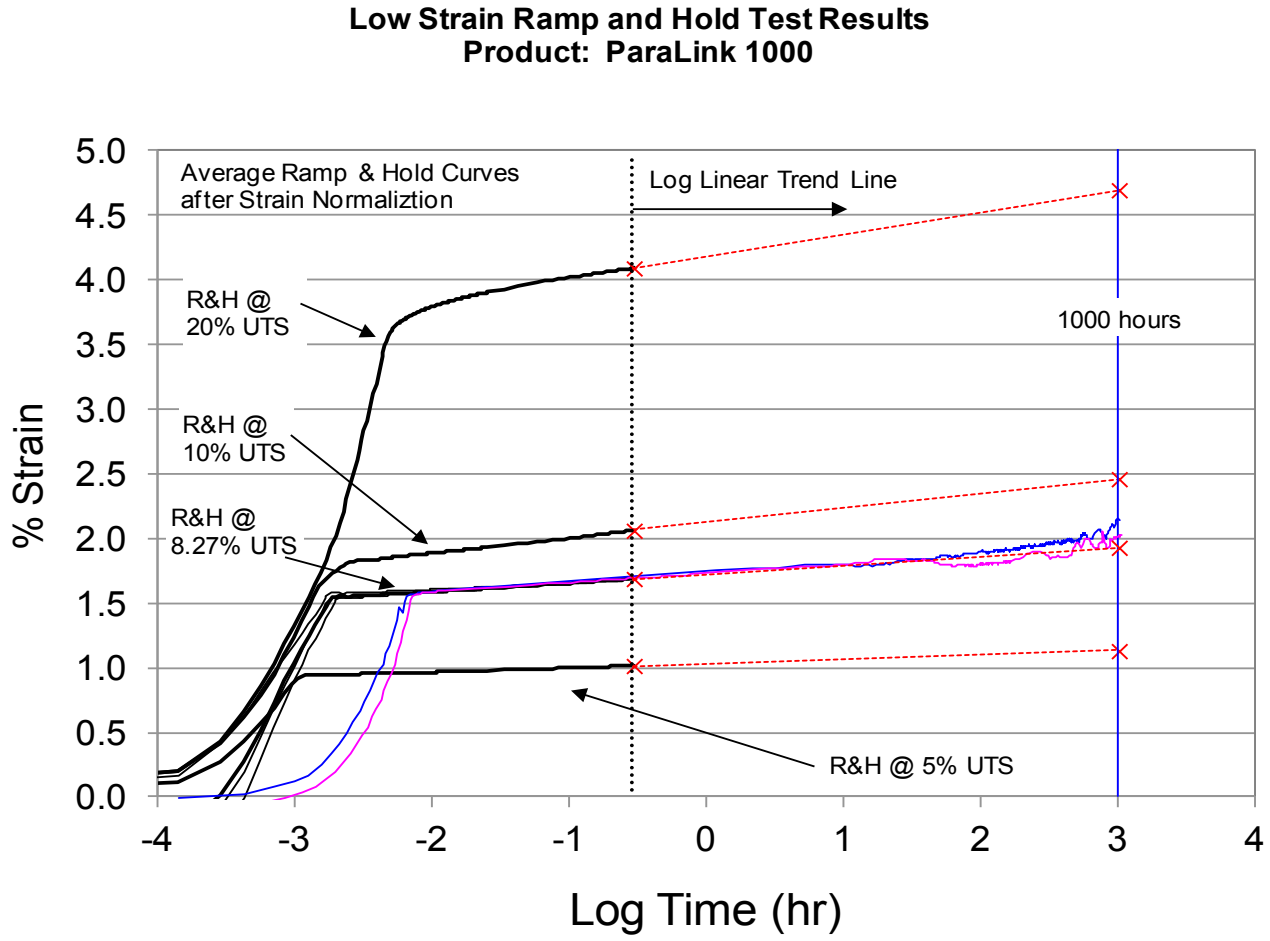

Figure H-14. Low strain ramp and hold tests for ParaLink 1000, after strain normalization, with 1000 hour low strain creep tests.

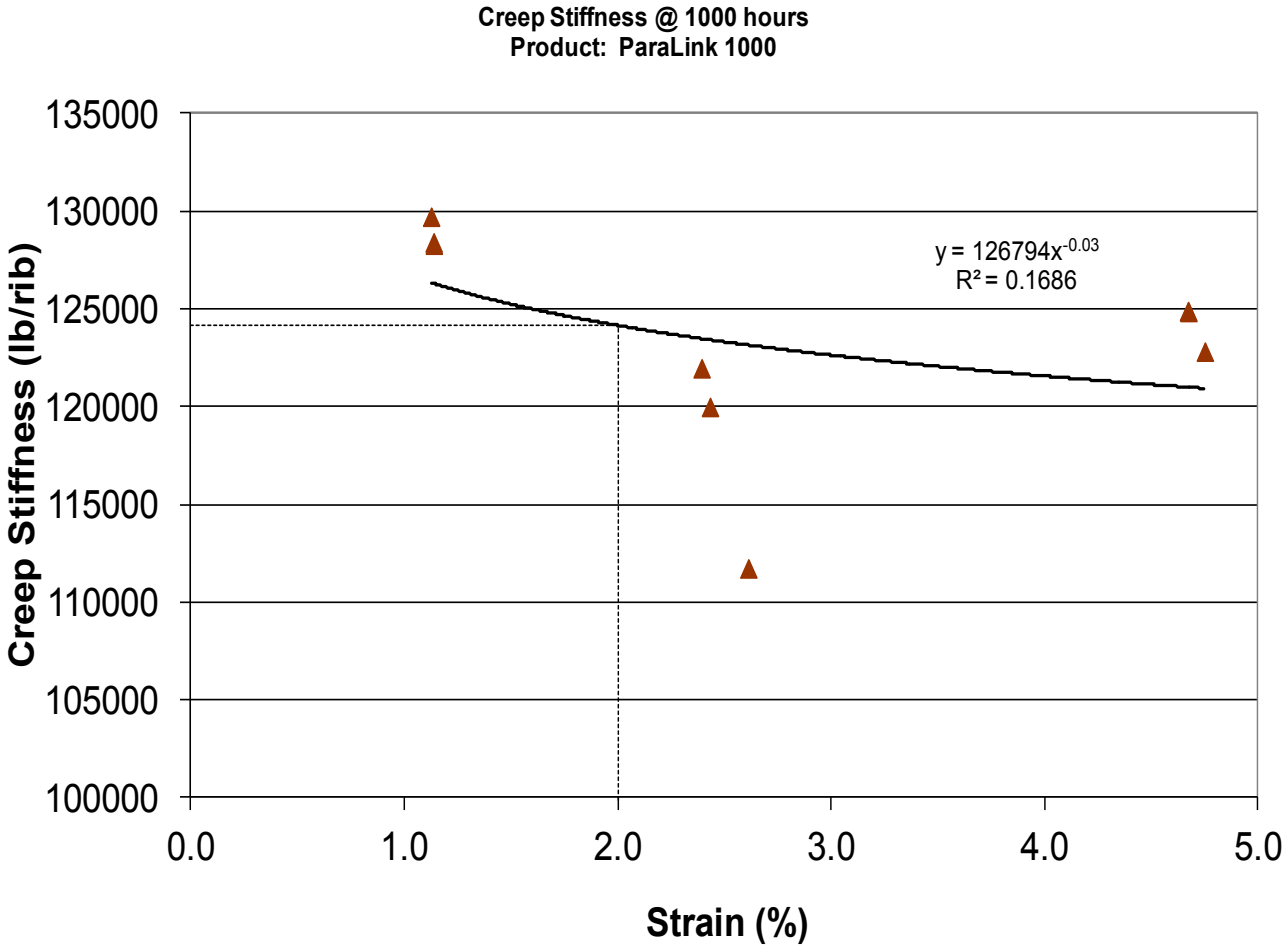

Figure H-15. Creep stiffness versus strain at 1,000 hours for ParaLink 1000.

"The National Transportation Product Evaluation Program (NTPEP) was established by the American Association of State Highway and Transportation Officials (AASHTO) in early 1994. The program pools the professional and physical resources of the AASHTO member departments in order to test materials, products and devices of common interest. The primary goals of the program are to provide cost-effective evaluations for the states by eliminating duplication of routine testing by the states; and to reduce duplication of effort by the manufacturers who produce and market commonly used proprietary, engineered products." **NTPEP**

-- Rick Smutzer (IN), former NTPEP Chairman

---

call 1.202.624.5800
fax 1.800.525.5469
online www.NTPEP.ORG

ITEM: NTPEP Report REGEO-2016-01-[Linear Composites-ParaWeb-ParaLink]

AASHTO
THE VOICE OF TRANSPORTATION

1.2.5 REINFORCEMENT CONNECTION DETAILS

Maccaferri Macbox Connection System (excerpt)

Note: This excerpt provides general information on the proprietary connector box. Detailed test data for the strength of the connector is presented in the following Appendix section. Therefore, the strength summary information in this original document is not included here.

© Stone Strong Systems

Maccaferri MacBox
Connection System

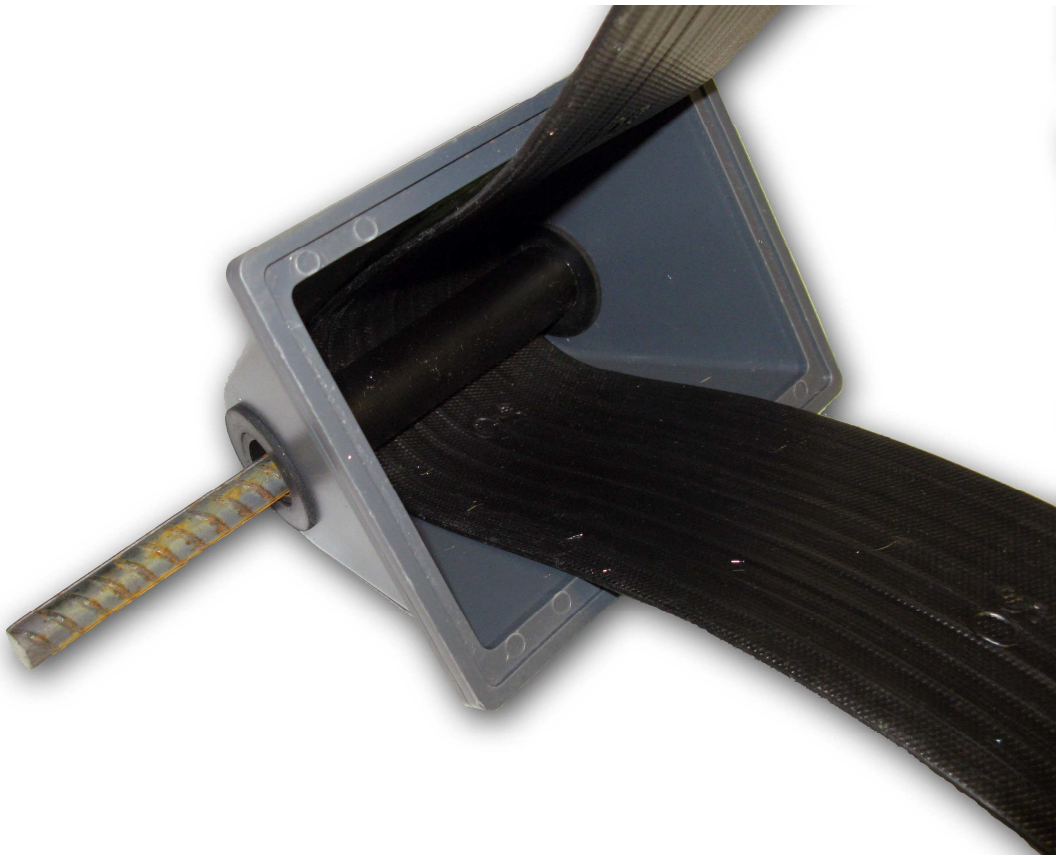

MACCAFERRI

MACCAFERRI

Table of Contents:

1.0 Maccaferri MacBox Connecting System 3

2.0 Long-term allowable tensile strength of the soil reinforcement to facing unit connector(s). 6

MACCAFERRI

1.0 Maccaferri MacBox Connecting System

Polymeric Cavity Connection Assembly

The Maccaferri connection assembly is composed of a (High Density Polyethylene (HDPE) cavity insert box secured by a steel rebar (anchor bar) in the precast concrete element (Figure 1 and Figure 2). The steel embedded rebar is encased in a polymeric sleeve for corrosion protection. The sleeve prevents water and concrete for entering during the casting phase and prevents damage to the polymeric soil reinforcing strips in contact with the deformed rebar. An alternate polymeric anchor rod (in lieu of a steel rebar) may also be considered with this system (Figure 3).

The connection system is supplied with a HDPE lid, which is closed during the casting phase to prevent the wet concrete from entering the cavity insert box.

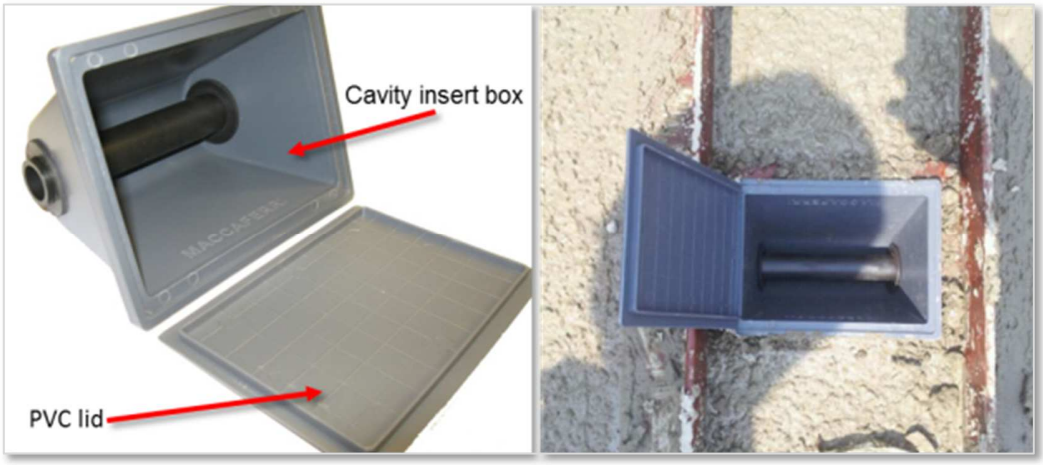

Figure 1 – Macres ® MSE Wall System's PVC Cavity Insert Box with a HDPE Lid.

MACCAFERRI

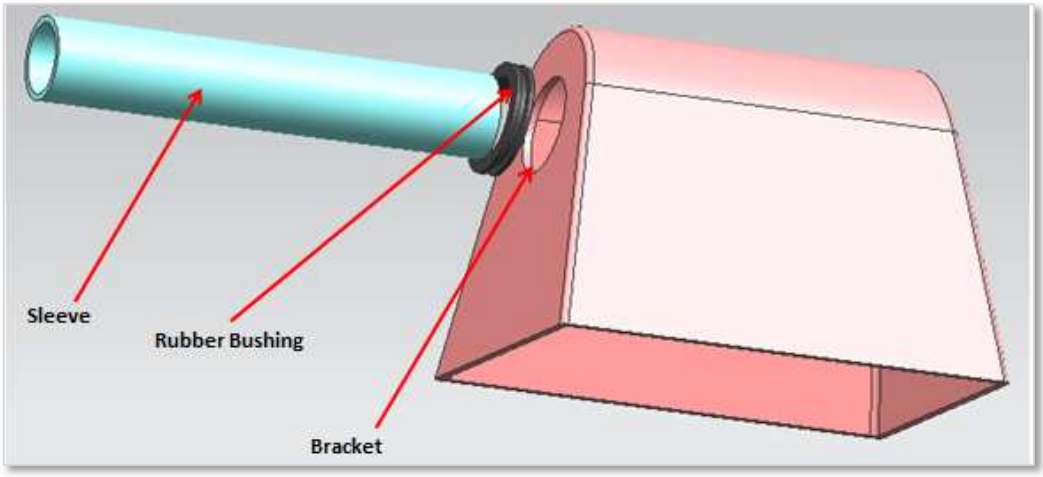

Figure 2 – MacRes® MSE Wall System's Connection Components.

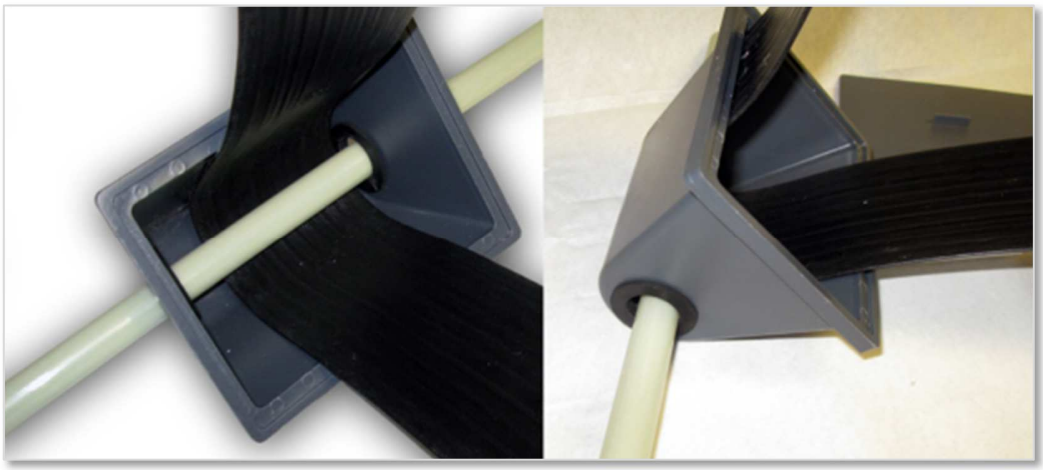

Figure 3 – MacRes ® MSE Wall System's Connection Assembly with Polymeric Anchor Rod.

The strength of the connection has been determined through an independent connection/pullout testing program performed at TRI/Environmental Laboratories in Austin, TX. The test results are discussed in detail in Chapter 2 of this report.

Steel Rebar/Anchor Bar (for Securing the Connection Assembly)

The steel rebar/anchor bar that secures the MacRes® connection's cavity insert box consists of ASTM A615 Grade 60, deformed rebar (uncoated).

The alternate polymeric anchor bar that secures the MacRes® connection's cavity insert box consists of a salt resistant and non-corrosive GFRP reinforcement rod (Glass Fiber Reinforced

MACCAFERRI

Polymer) manufactured of high performance composite materials including vinylester resin and ECR glass fibers.

1.2.6 CONNECTION PROPERTIES

Macbox Connector Pullout Test
Macbox Pullout Calculations
Paraweb Bend Tensile Test

Note: The connector pullout test report includes tests using polymeric anchor bars. Stone Strong only uses steel reinforcing bars for anchorage inside of the Macbox connectors. Polymeric anchor bars are not used.

© Stone Strong Systems

June 17, 2015

Mail To:

Ms. Giulia Lugli
Maccaferri, Inc.
10303 Governor Lane Blvd.
Williamsport, MD 21795

email: glugli@maccaferri-usa.com

Bill To:

<= Same

Dear Ms. Lugli:

Thank you for consulting TRI/Environmental, Inc. (TRI) for your laboratory testing needs. TRI is pleased to submit this final report for laboratory testing.

TRI Job Reference Number:	E2371-04-09
Material(s) Tested:	4 Concrete Panels with Polymeric Anchor Bars 4 Concrete Panels with Steel Anchor Bars
Test(s) Requested:	Tensile Testing

If you have any questions or require any additional information, please call us at 1-800-880-8378.

Sincerely,

Jarrett A. Nelson

Jarrett A. Nelson
Technical Director
Geosynthetic Services Division
www.GeosyntheticTesting.com

The testing herein is based upon accepted industry practice as well as the test method listed. Test results reported herein do not apply to samples other than those tested. TRI neither accepts responsibility for nor makes claim as to the final use and purpose of the material. TRI observes and maintains client confidentiality. TRI limits reproduction of this report, except in full, without prior approval of TRI.

LABORATORY TEST RESULTS
TRI Client: Maccaferri, Inc.
Photographs

Concrete Blocks as Received (Plywood Lid Removed)

Concrete Blocks with Forms Removed

Concrete Block with Polymeric Bar

Concrete Block with Steel Bar

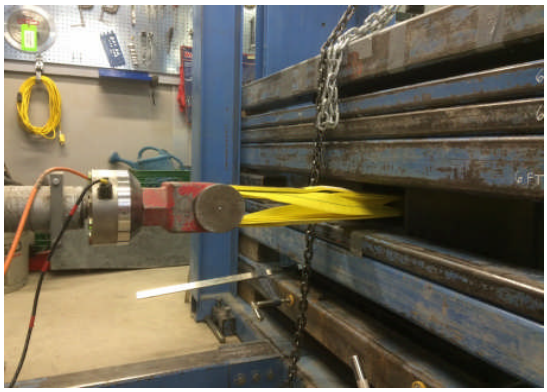

Test Set-Up

The testing herein is based upon accepted industry practice as well as the test method listed. Test results reported herein do not apply to samples other than those tested. TRI neither accepts responsibility for nor makes claim as to the final use and purpose of the material. TRI observes and maintains client confidentiality. TRI limits reproduction of this report, except in full, without prior approval of TRI.

LABORATORY TEST RESULTS

TRI Client: Maccaferri, Inc.

Material: Concrete Panels
Sample Identification: Polymeric Anchor Bars
TRI Log #: E2371-04-09

PARAMETER	TEST REPLICATE NUMBER				RESULT	
	1	2	3	4		
Tensile Strength						
Test Date:	6/12	6/12	6/15	6/15		
Peak Load (lbs)	6386	6036	6513	5931	**6217**	277

Specimen 1 - Post-Test

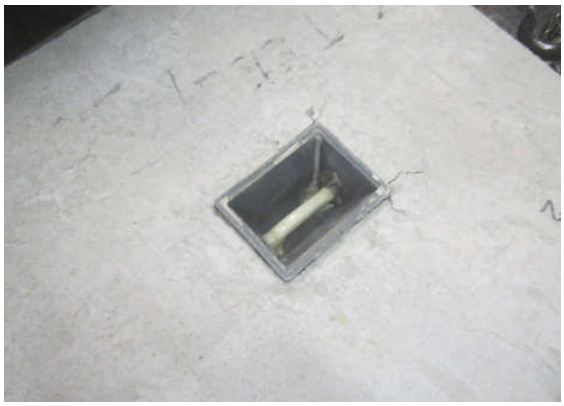

Specimen 2 - Post-Test

Specimen 3 - Post-Test

Specimen 4 - Post-Test

The testing herein is based upon accepted industry practice as well as the test method listed. Test results reported herein do not apply to samples other than those tested. TRI neither accepts responsibility for nor makes claim as to the final use and purpose of the material. TRI observes and maintains client confidentiality. TRI limits reproduction of this report, except in full, without prior approval of TRI.

Tensile Test Results
TRI: Client: Maccaferri, Inc.
Product: Concrete Block with Polymeric Bar

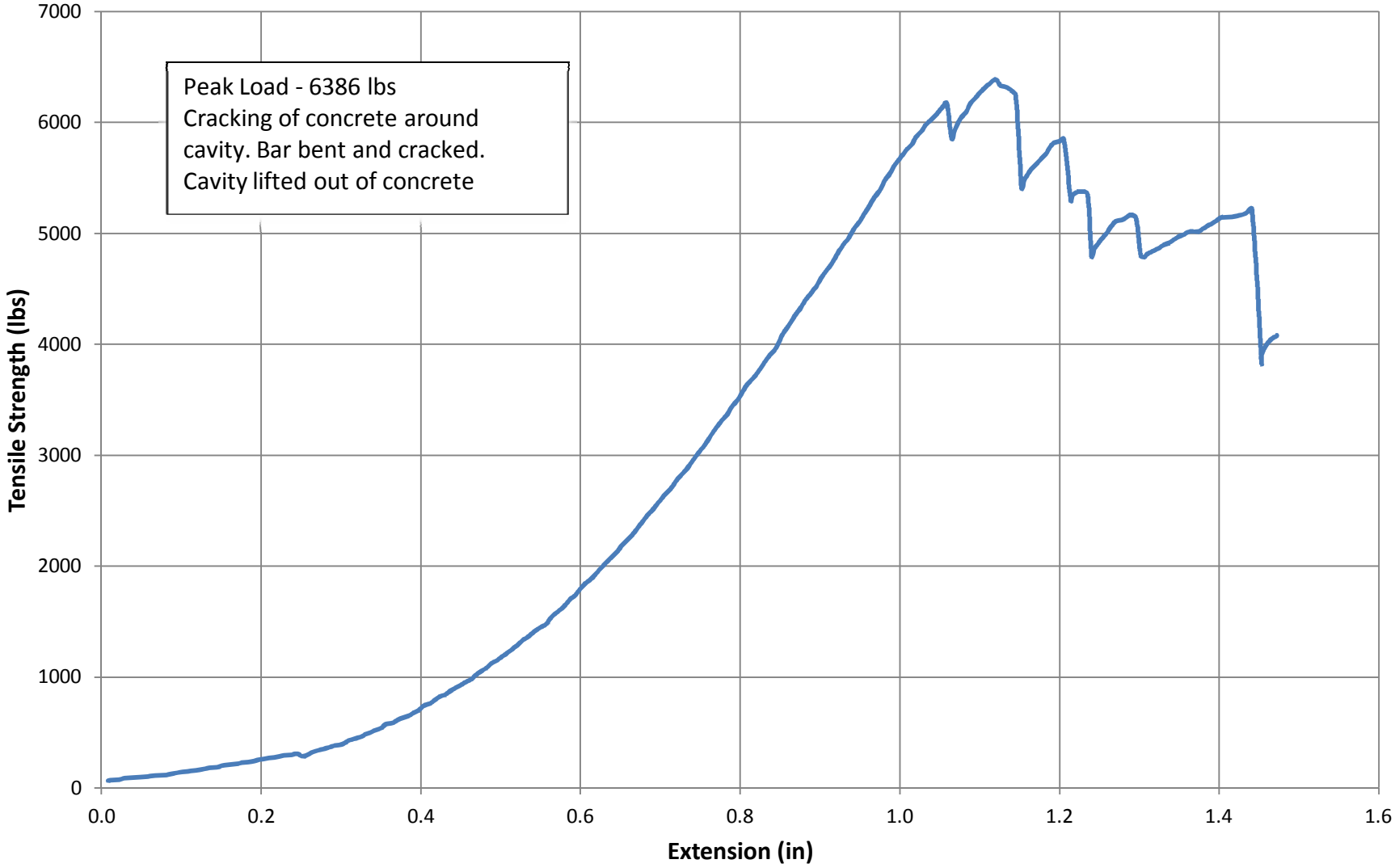

9063 Bee Caves Road / Austin, TX 78733 / 512-263-2101 / FAX 263-2558 / 800-880-TEST

Tensile Test Results
TRI: Client: Maccaferri, Inc.
Product: Concrete Block with Polymeric Bar

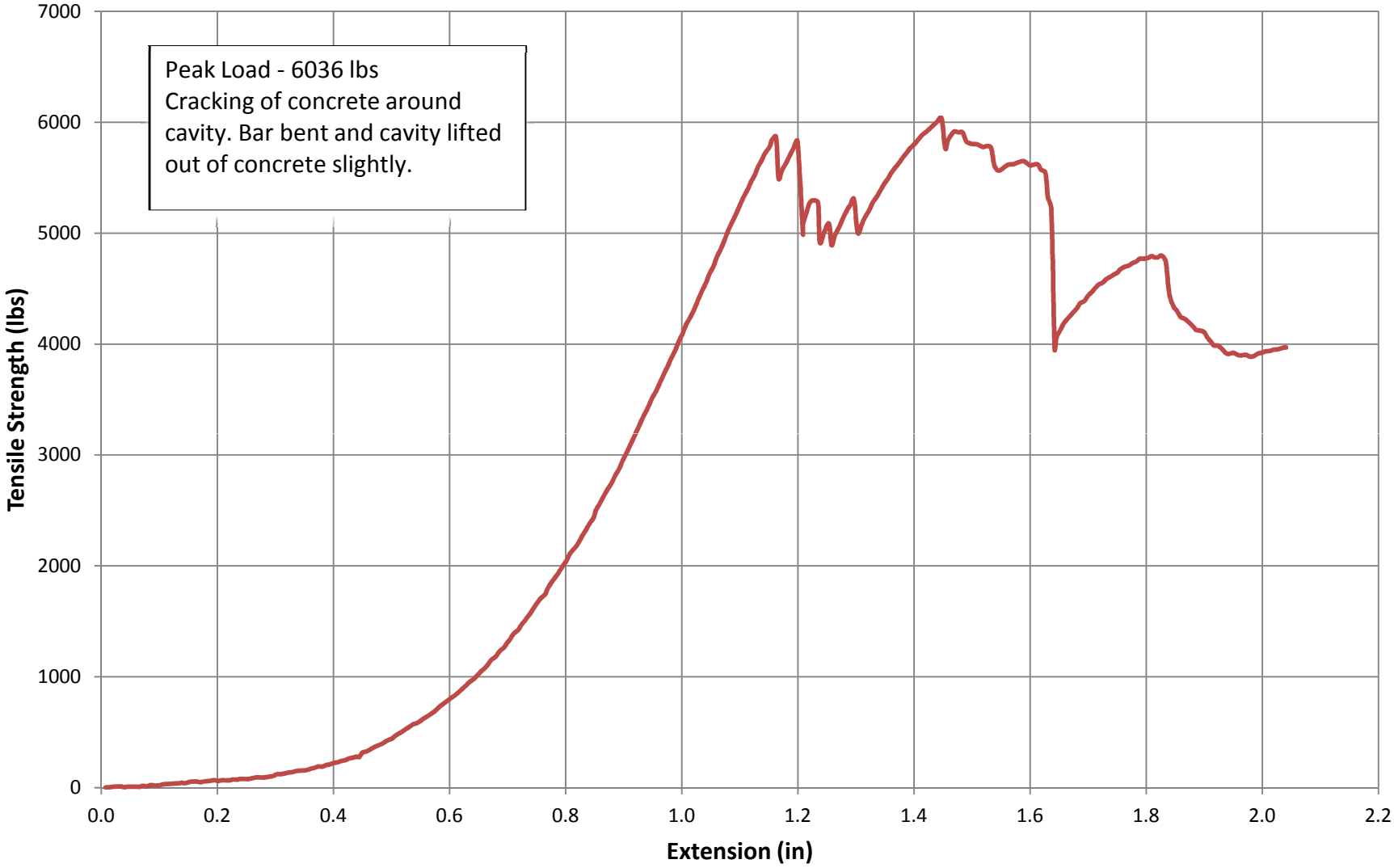

9063 Bee Caves Road / Austin, TX 78733 / 512-263-2101 / FAX 263-2558 / 800-880-TEST

Tensile Test Results
TRI: Client: Maccaferri, Inc.
Product: Concrete Block with Polymeric Bar

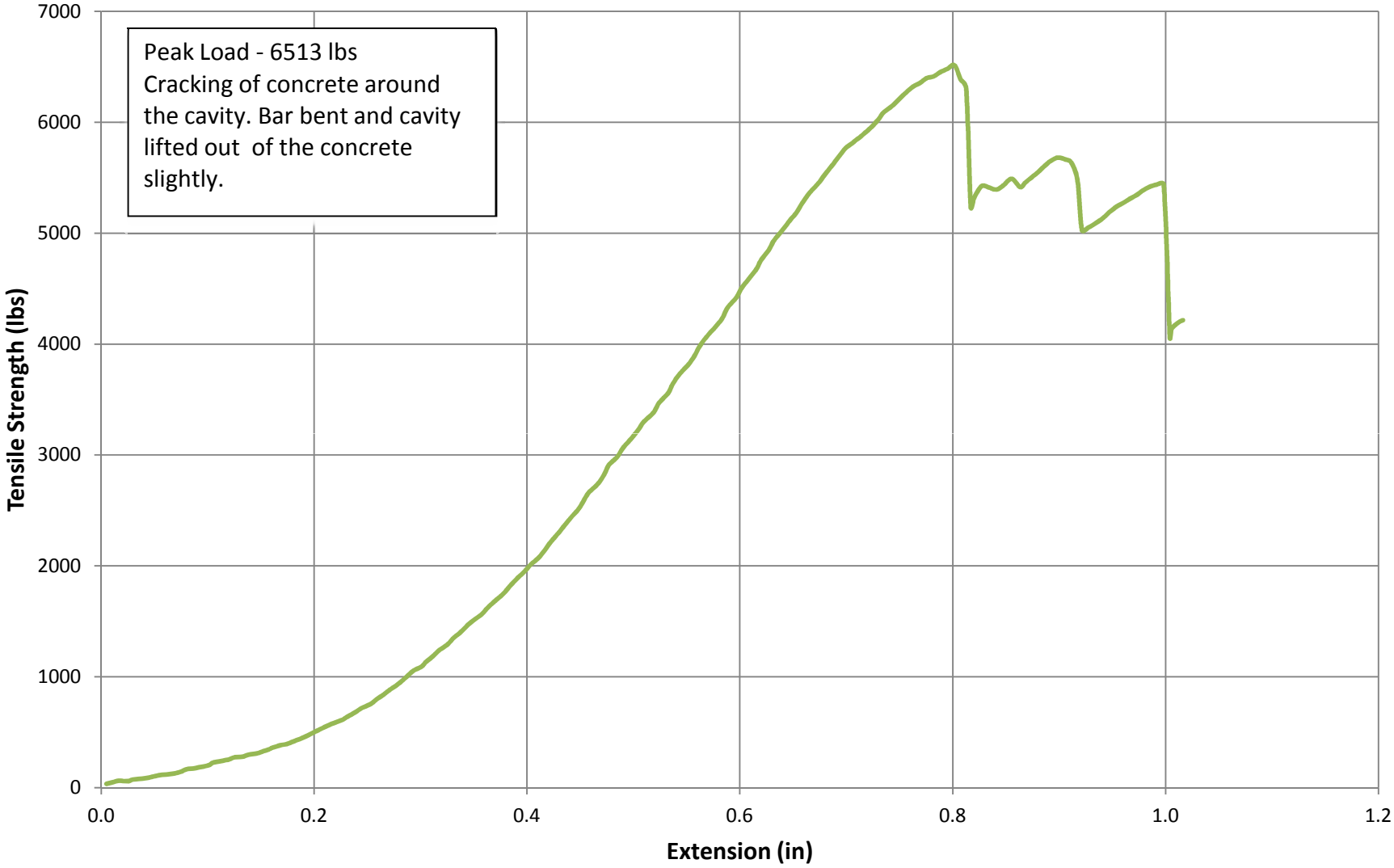

9063 Bee Caves Road / Austin, TX 78733 / 512-263-2101 / FAX 263-2558 / 800-880-TEST

Tensile Test Results
TRI: Client: Maccaferri, Inc.
Product: Concrete Block with Polymeric Bar

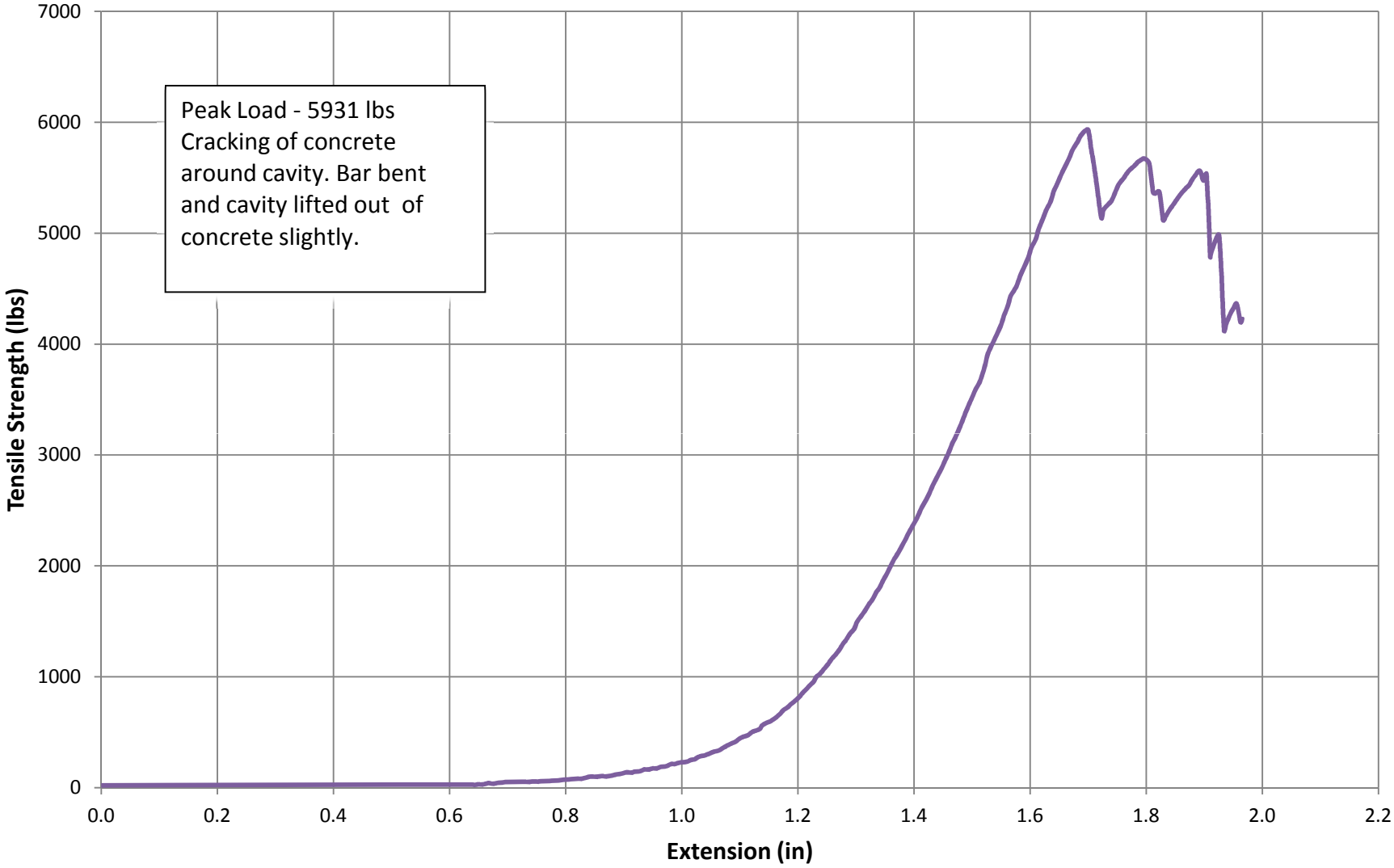

9063 Bee Caves Road / Austin, TX 78733 / 512-263-2101 / FAX 263-2558 / 800-880-TEST

LABORATORY TEST RESULTS

TRI Client: Maccaferri, Inc.

Material: Concrete Panels
Sample Identification: Steel Anchor Bars
TRI Log #: E2371-04-09

PARAMETER	TEST REPLICATE NUMBER				RESULT	
	1	2	3	4		
Tensile Strength						
Test Date:	6/12	6/12	6/15	6/15		
Peak Load (lbs)	14731	14870	12978	12899	**13870**	1077

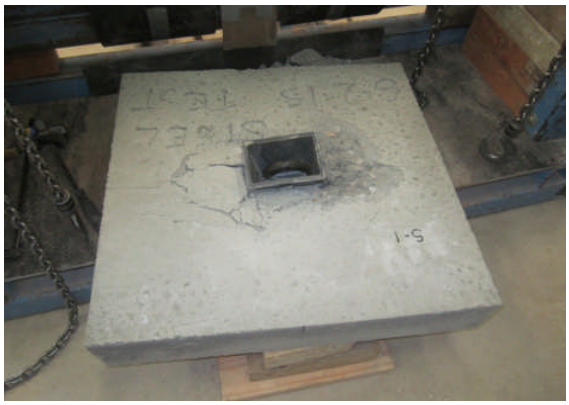

Specimen 1 - Post-Test

Specimen 2 - Post-Test

Specimen 3 - Post-Test

Specimen 4 - Post-Test

The testing herein is based upon accepted industry practice as well as the test method listed. Test results reported herein do not apply to samples other than those tested. TRI neither accepts responsibility for nor makes claim as to the final use and purpose of the material. TRI observes and maintains client confidentiality. TRI limits reproduction of this report, except in full, without prior approval of TRI.

Tensile Test Results
TRI: Client: Maccaferri, Inc.
Product: Concrete Block with Steel Bar

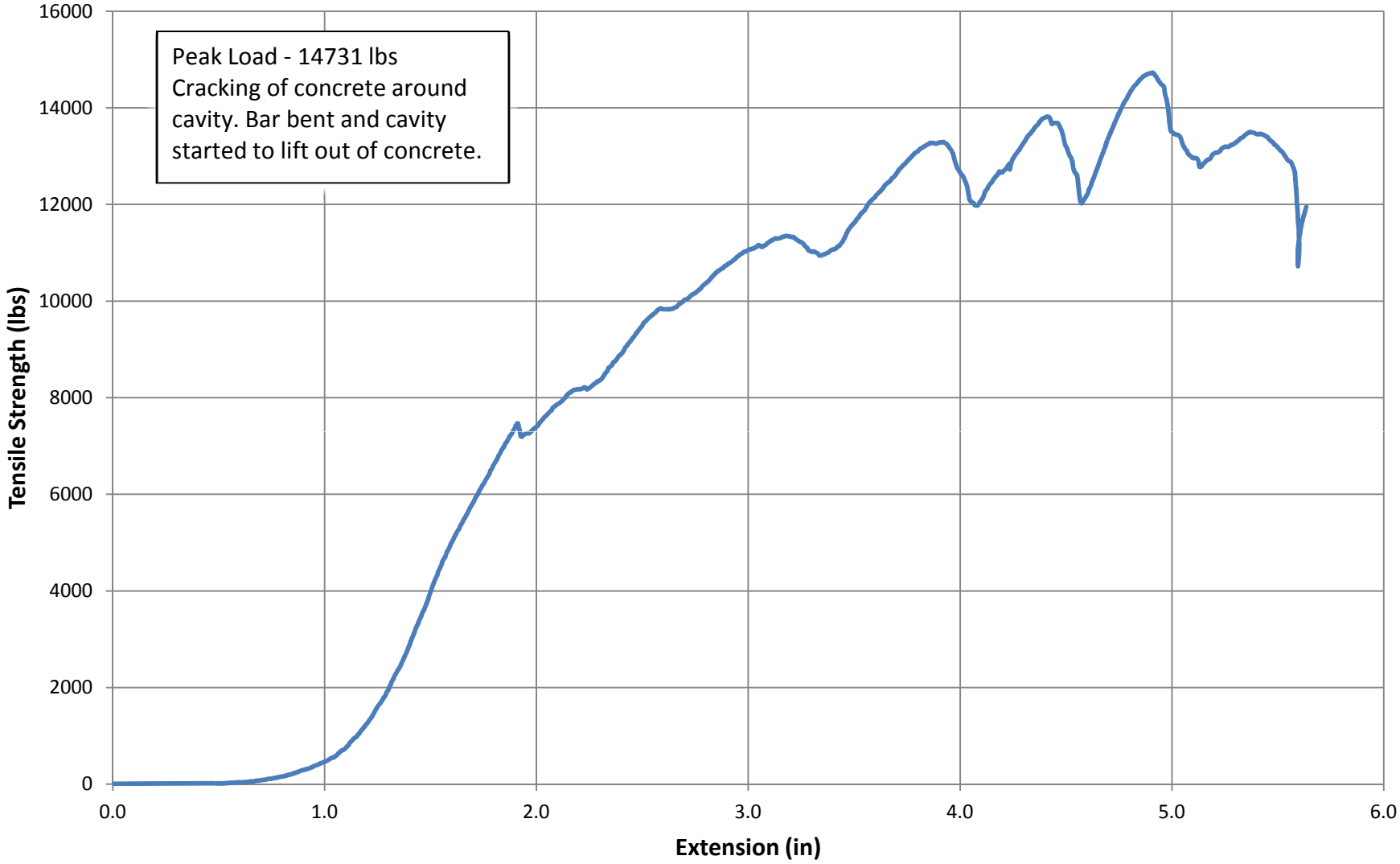

9063 Bee Caves Road / Austin, TX 78733 / 512-263-2101 / FAX 263-2558 / 800-880-TEST

Tensile Test Results
TRI: Client: Maccaferri, Inc.
Product: Concrete Block with Steel Bar

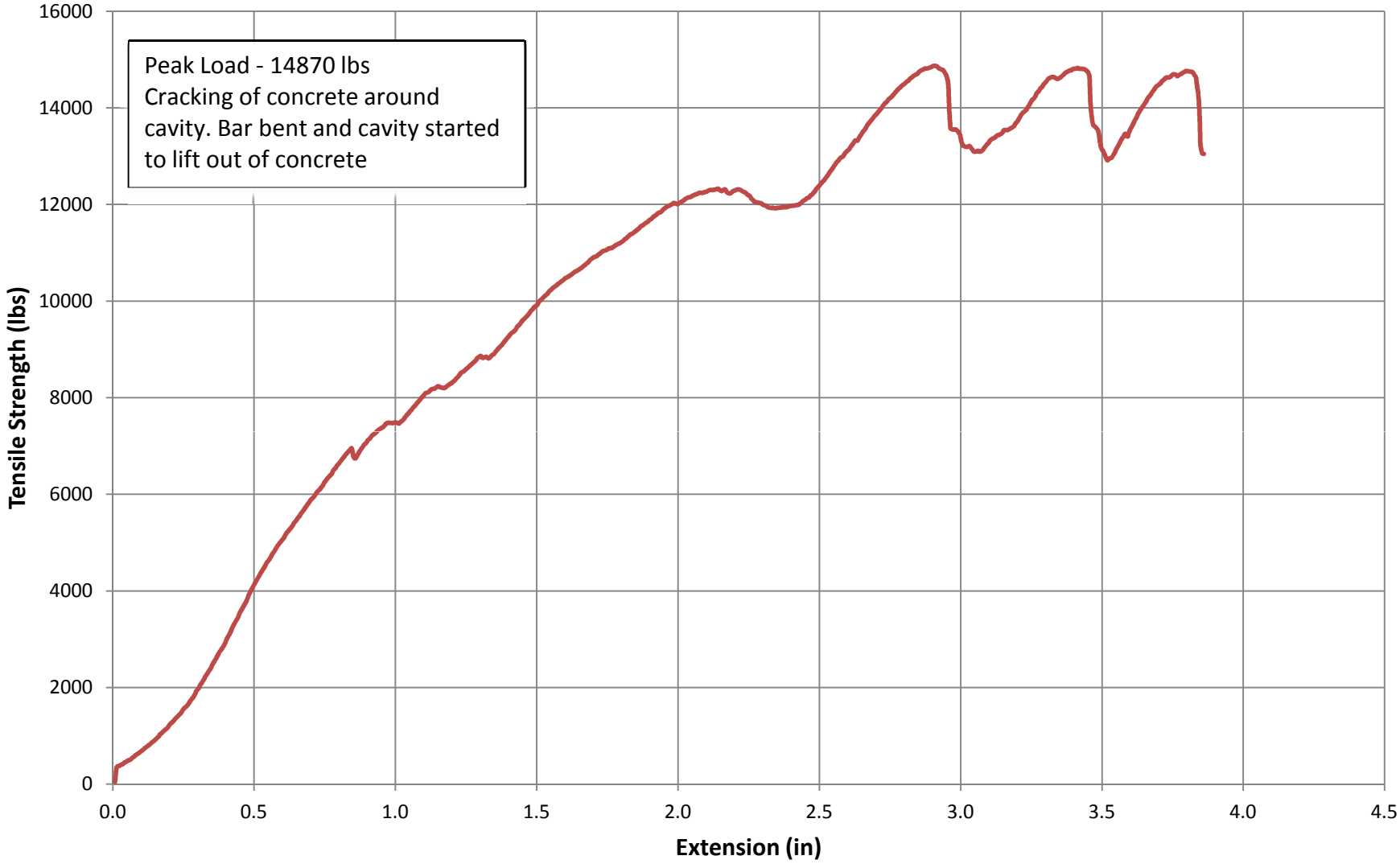

9063 Bee Caves Road / Austin, TX 78733 / 512-263-2101 / FAX 263-2558 / 800-880-TEST

Tensile Test Results
TRI: Client: Maccaferri, Inc.
Product: Concrete Block with Steel Bar

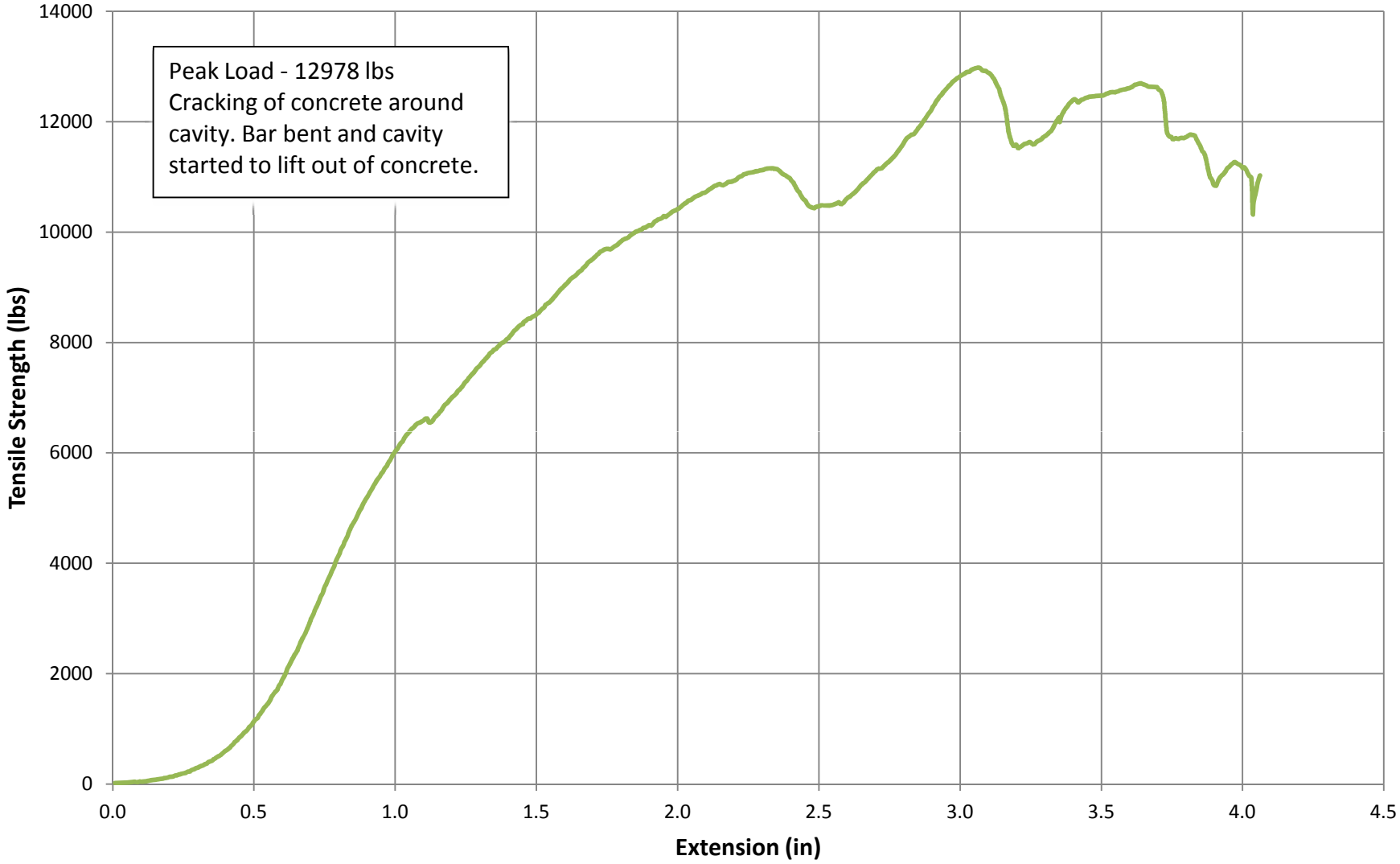

9063 Bee Caves Road / Austin, TX 78733 / 512-263-2101 / FAX 263-2558 / 800-880-TEST

Tensile Test Results
TRI: Client: Maccaferri, Inc.
Product: Concrete Block with Steel Bar

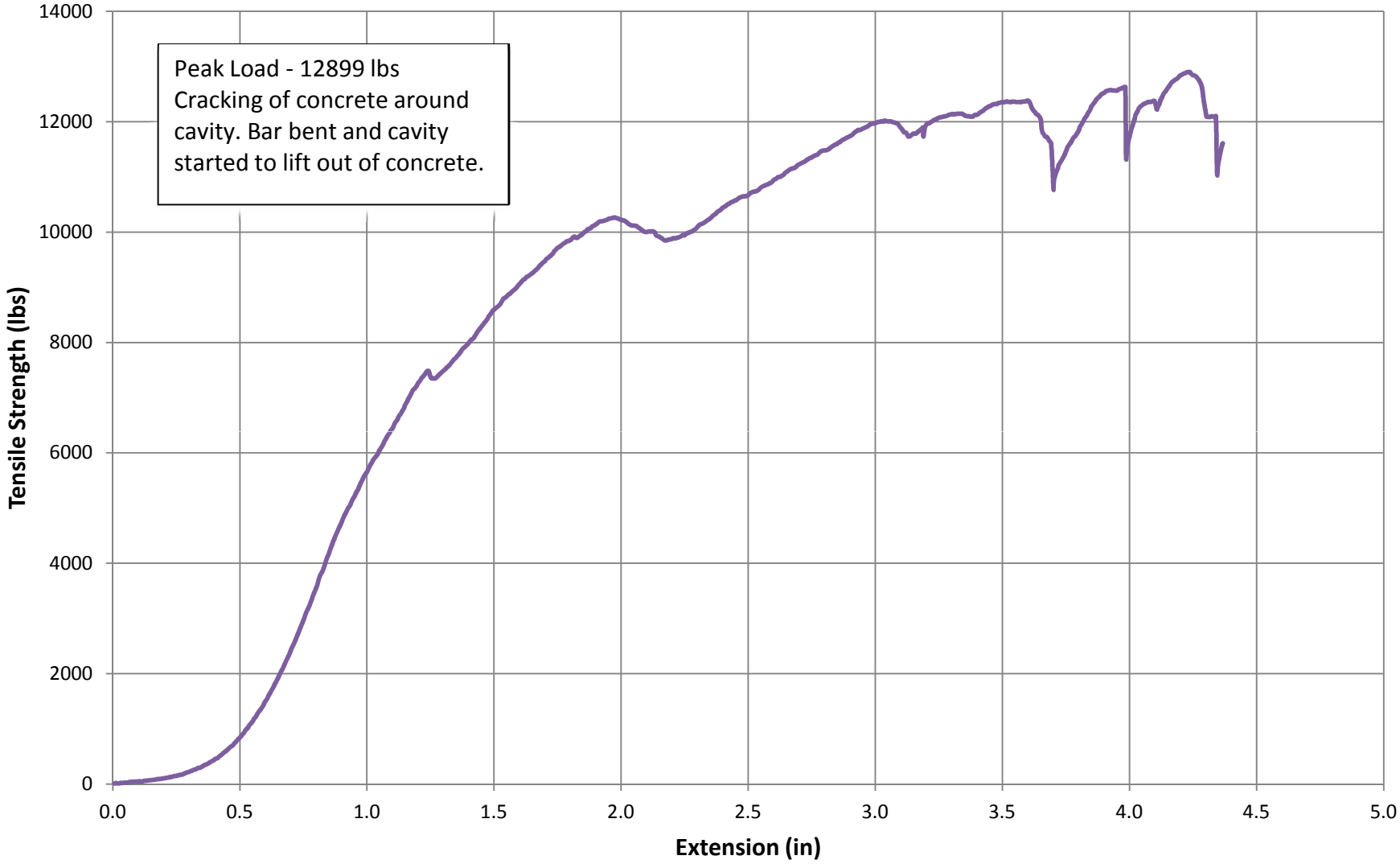

9063 Bee Caves Road / Austin, TX 78733 / 512-263-2101 / FAX 263-2558 / 800-880-TEST

Addendum A1

TRI Client: Maccaferri, Inc.
TRI Log #: E2371-04-09

Steel Anchor Bar #5 (16 mm) ASTM A615 Grade 60

Concrete Block Dimensional Drawings

Casting Photographs

Class A4 Concrete Mix Designs

The testing herein is based upon accepted industry practice as well as the test method listed. Test results reported herein do not apply to samples other than those tested. TRI neither accepts responsibility for nor makes claim as to the final use and purpose of the material. TRI observes and maintains client confidentiality. TRI limits reproduction of this report, except in full, without prior approval of TRI.

Addendum A1

TRI Client: Maccaferri, Inc.
TRI Log #: E2371-04-09

Steel Anchor Bar #5 (16 mm) ASTM A615 Grade 60

Concrete Block Dimensional Drawings

The testing herein is based upon accepted industry practice as well as the test method listed. Test results reported herein do not apply to samples other than those tested. TRI neither accepts responsibility for nor makes claim as to the final use and purpose of the material. TRI observes and maintains client confidentiality. TRI limits reproduction of this report, except in full, without prior approval of TRI.

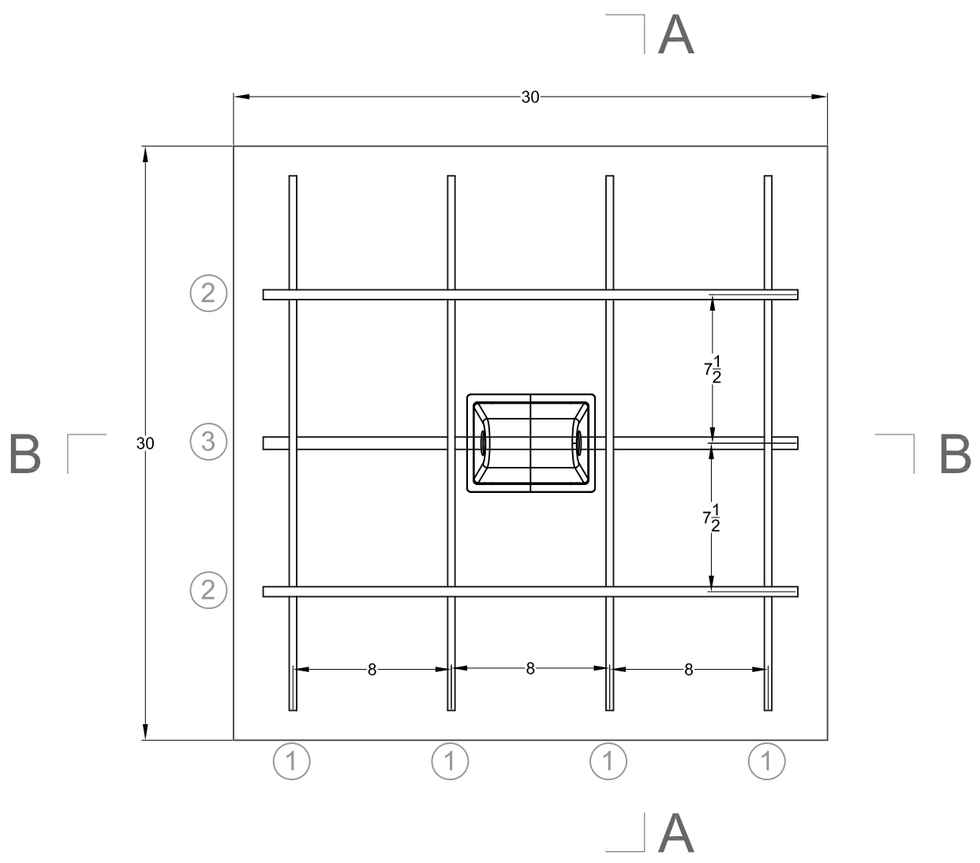

Section A-A

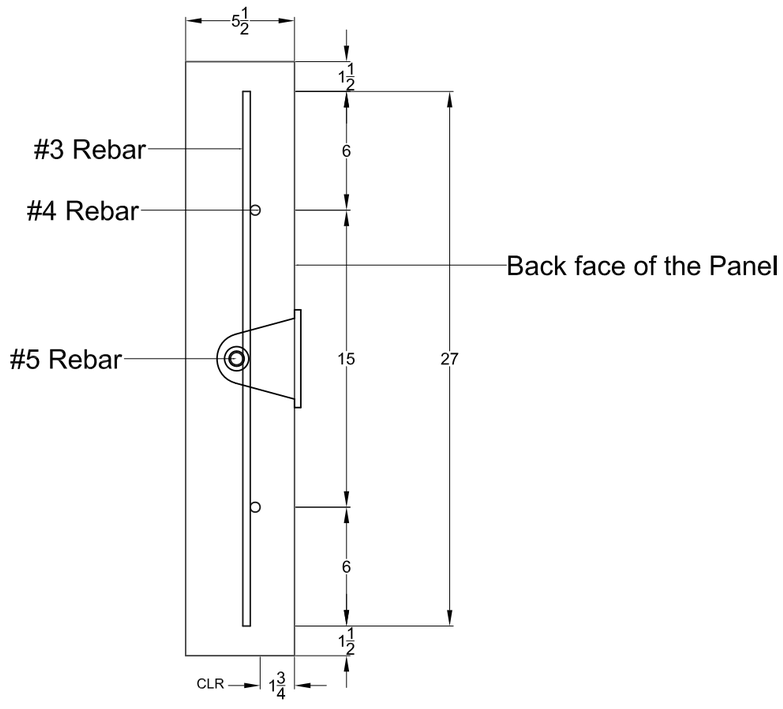

REINFORCEMENT SCHEDULE			
Ref.	Ø	Number	Length
1	# 3	4	27"
2	# 4	2	27"
3	# 5	1	27"

All lifting inserts to th back face (for handling)

Section B-B

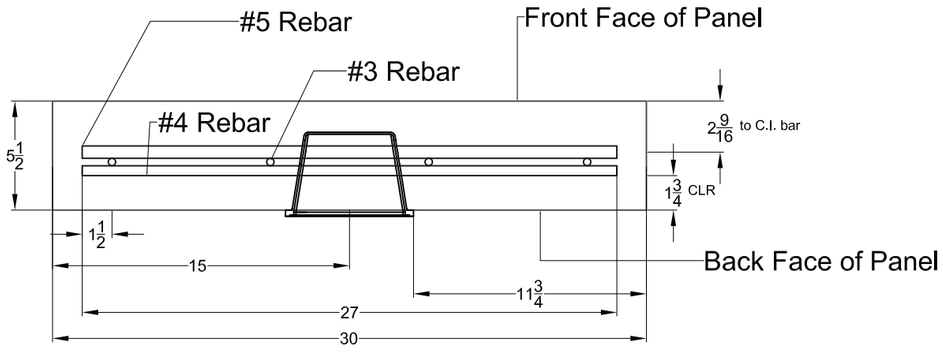

Notes:

(1) Reinforcing steel shall conform to ASTM A615 Grade 60 (uncoated)

(2) Concrete compressive strength at 28 days, fc'= 4000psi (max)

Maccaferri Inc. assumes no responsibility for the drawings and calculations it provides, as they must be intended as a general indication to suggest the proper use of its products.

Rev:	Issue / Revision:	Drawn:	App:	Date:

Drawing Title: Macres Samples Steel Bars

Project No: #

Client: ####

Drawing No: 1 / #

Units: Inch

Scale: NTS

Rev: #

Printed on: 3/17/15

Designed: ## Date: ########

Drawn: ## Date: ########

Checked: ## Date: ########

Project: ####

NOT FOR CONSTRUCTION

MACCAFERRI
Maccaferri, Inc.
10303 Governor Lane Blvd.
Williamsport, MD 21795-3116 USA
Ph. (301) 223-6910 Fax (301) 223-6134

Addendum A1

TRI Client: Maccaferri, Inc.
TRI Log #: E2371-04-09

Steel Anchor Bar #5 (16 mm) ASTM A615 Grade 60

Casting Photographs

The testing herein is based upon accepted industry practice as well as the test method listed. Test results reported herein do not apply to samples other than those tested. TRI neither accepts responsibility for nor makes claim as to the final use and purpose of the material. TRI observes and maintains client confidentiality. TRI limits reproduction of this report, except in full, without prior approval of TRI.

Addendum A1

TRI Client: Maccaferri, Inc.
TRI Log #: E2371-04-09

Steel Anchor Bar #5 (16 mm) ASTM A615 Grade 60

Class A4 Concrete Mix Designs

The testing herein is based upon accepted industry practice as well as the test method listed. Test results reported herein do not apply to samples other than those tested. TRI neither accepts responsibility for nor makes claim as to the final use and purpose of the material. TRI observes and maintains client confidentiality. TRI limits reproduction of this report, except in full, without prior approval of TRI.

CEMEX

Main Office: 3990 E Concours St . #200 Ontario, California 91764
Phone (909) 974-5500 Fax (909) 974-5497 Dispatch 1-800-801-7625

STATEMENT OF MIX DESIGN FOR CONCRETE

Project: **Various Projects**
Various Locations

Date: 5/13/2014
Mix Design No.: 1418596

Contractor: **Surecast West**

Mix Description: 4000 PSI 1" Pump/Place Mix Design CLASS "1"

Strength:	4000 PSI at 28 Days	Batch Plants: Redlands	
Cementitious Material:	7.18 Sacks / Cu. Yd.	Aggregate Source: Cemex - Lytle Creek (91-36-0040)	
Penetration	2.0 Inches	Aggregate: CalTrans Section 90	
Slump:	4.00 Inches	Cement: ASTM C 150 - Type II Modified	
W/C Ratio:	0.44 By Weight	Fly Ash: ASTM C 618 - Class F	

ONE CUBIC YARD MIX PROPORTIONS, SSD:

MATERIAL		BATCH WEIGHT, LBS.	SP. GR.	ABS. VOL., CU. FT.
CEMENT	75 %	506	3.15	2.58
FLY ASH	25 %	169	2.30	1.18
WATER (TOTAL)	35.5 GALS.	296	1.00	4.74
AIR CONTENT	1 %	0		0.27
W. C. SAND	44 %	1318	2.62	8.06
# 4 - 3/8 IN. AGG.	0 %	0	2.62	0.00
# 3 - 1 IN. AGG.	56 %	1677	2.64	10.18
# 2 - 1.5 IN. AGG.	%	0	2.66	0.00
ADMIXTURE	15.1 to 25.3 fl. oz. of WRDA 64 (3 to 5/cwt cement) ASTM C 494 - Type A			

UNIT WEIGHT: 146.9 Lbs./Cu.Ft. 3965 Lbs. 27.00 Cu.Ft.

AGGREGATE GRADATIONS:

	Percent Passing U. S. Standard Sieves			Comb.	Caltrans
SIEVE SIZE	W C SAND	# 4 - 3/8 In.	# 3 - 1 In.	# 2 - 1.5 In.	Grading	Limit
1.5 In.	100	100	100	98	100.0	100.0
1 In.	100	100	97	27	98.3	90-100
3/4 In.	100	100	73	6	84.9	55-100
3/8 In.	100	90	16	2	53.0	45-75
No. 4	97	15	4	0	44.9	35-60
No. 8	81	5	3	0	37.3	27-45
No. 16	61	4	0	0	26.8	20-35
No. 30	38	0	0	0	16.7	12-25
No. 50	18	0	0	0	7.9	5-15
No. 100	7	0	0	0	3.1	1-8
No. 200	3	0	0	0	1.3	0-4

X Values

WCSand		1" x No. 4	
No. 16	X = 61	3/4"	X = 73
No. 30	X = 38	3/8"	X = 15
No. 50	X = 18		

Respectfully submitted,
Cemex

Randy Johnston

Technical Services

REGISTERED PROFESSIONAL ENGINEER JAMES R. WADDELL C041219 EXP 3-31-15 CIVIL STATE OF CALIFORNIA

This mix design represents a combination of materials evaluated and established in accordance with section 1905B.3.1.1 Method B of the California Building Code. This mix is to be used only as designated, with no substitutions or additions. This mix to be used only for the job address indicated or as approved. FAILURE TO ADHERE TO ASTM STANDARDS IN SAMPLING, SLUMP, MAKING AND CURING SAMPLES, TRANSPORTING SAMPLES AND TESTING WILL RESULT IN A SUBSTANTIAL REDUCTION IN COMPRESSIVE STRENGTHS LISTED ABOVE. Notes: SOUTHWEST SPECIAL TESTING HAS NOT SEEN THE SOILS REPORT FOR THE PROJECT. CONTRACTOR MUST ADHERE TO THE GUIDELINES OF UBC TABLE 19.

Addendum A2

TRI Client: Maccaferri, Inc.
TRI Log #: E2371-04-09

Polymeric Anchor bar 20 mm

Polymeric Anchor Bar Technical Data Sheet

Concrete Block Dimensional Drawings

Casting Photographs

Class A4 Concrete Mix Designs

The testing herein is based upon accepted industry practice as well as the test method listed. Test results reported herein do not apply to samples other than those tested. TRI neither accepts responsibility for nor makes claim as to the final use and purpose of the material. TRI observes and maintains client confidentiality. TRI limits reproduction of this report, except in full, without prior approval of TRI.

Addendum A2

TRI Client: Maccaferri, Inc.
TRI Log #: E2371-04-09

Polymeric Anchor bar 20 mm

Polymeric Anchor Bar Technical Data Sheet

The testing herein is based upon accepted industry practice as well as the test method listed. Test results reported herein do not apply to samples other than those tested. TRI neither accepts responsibility for nor makes claim as to the final use and purpose of the material. TRI observes and maintains client confidentiality. TRI limits reproduction of this report, except in full, without prior approval of TRI.

MateenBar – Technical Submittal

Reference Standards and Reports

The references below should be referred to by the engineer regarding the application of Mateenbar for concrete reinforcement. Additional information is available from Pultron Composites for design assistance for specific applications.

References	Titles
ACI 318-95	"Building Code Requirements for Concrete" (1995) American Concrete Institute, Farmington Hills, MI, USA.
ACI 440.1 R-06	"Guide for the Design and Construction of Concrete Reinforced with FRP Bars" American Concrete Institute, Farmington Hills, MI, USA.
AASHTO GFRP - 1	"American Association of State Highway and Transport Officials" ISBN 978 – 1 – 56051-458-9

Mechanical Properties

The following table gives mechanical properties of MateenBar.

Property / Diameter	Unit	6	8	10	12	14	16	18	20	22	25	32	38[2]	Standard
MateenBar generation		GII	GII	GII			GII				GII	GII		
Root diameter	mm	5.2	7.2	9.2	11.0	13.2	15.2	17.2	19.2	21.0	24.2	30.6	36.7	
Outside diameter	mm	6.0	8.0	10.0	11.8	14.0	16.0	18.0	20.0	21.8	25.0	31.4	37.5	
Nominal area	mm2	21.2	40.7	66.5	95.0	136.8	181.5	232.4	289.5	346.4	460.0	735.4	1,057.8	
Tensile strength (average)	MPa	1100	1241	1350			1245				1220	1254		ACI 440.3R-04, ASTM D 7205
Tensile strength (Guaranteed)[1]	MPa	1000	1085	1240	750	750	1045	690	690	690	1025	1110	550	ACI 440.3R-04, ASTM D 7205
Ultimate tensile load (Average)	kN	23.3	53.4	92.0	86.0	122.5	234.0	203.8	251.6	303.9	570.0	935.0	837.8	
Tensile modulus of elasticity	GPa	57	57	60	53	53	58	51	51	51	58	56	49	ACI 440.3R-04, ASTM D 7205
Ultimate tensile strain (rupture)		0.019	0.022	0.021	0.014	0.014	0.018	0.014	0.014	0.014	0.018	0.020	0.011	ACI 440.6-08 8.4
Transverse shear strength	MPa	> 150	> 150	> 150	> 150	> 150	> 150	> 150	> 150	> 150	> 150	> 150	> 150	ACI 440.3R-04
Flexural strength	MPa	> 900	> 900	> 900	> 900	> 900	> 900	> 900	> 900	> 900	> 900	> 900	> 900	ASTM D790
Flexural modulus	GPa	> 53	> 53	> 53	> 53	> 53	> 53	> 53	> 53	> 53	> 53	> 53	> 53	ASTM D790
Compressive strength	MPa	> 400	> 400	> 400	> 400	> 400	> 400	> 400	> 400	> 400	> 400	> 400	> 400	ASTM D695
Short beam shear strength	MPa	> 50	> 50	> 50	> 50	> 50	> 50	> 50	> 50	> 50	> 50	> 50	> 50	ASTM D447
Bond strength at failure	MPa	16	16	16	16	16	16	16	16	16	16	16	16	ACI 440.3R-04
Barcol hardness		> 60	> 60	> 60	> 60	> 60	> 60	> 60	> 60	> 60	> 60	> 60	> 60	ASTM D2583
Glass transition temperature	°C	> 110	> 110	> 110	> 110	> 110	> 110	> 110	> 110	> 110	> 110	> 110	> 110	ASTM E1640-4 (DMTA)
Thermal expansion coefficient transverse	/ °C	$22x10^{-6}$	$22x10^{-6}$	$22x10^{-6}$	$22x10^{-6}$	$22x10^{-6}$	$22x10^{-6}$	$22x10^{-6}$	$22x10^{-6}$	$22x10^{-6}$	$22x10^{-6}$	$22x10^{-6}$	$22x10^{-6}$	ASTM D696
Thermal expansion coefficient longitudinal	/ °C	$7.2x10^{-6}$	$7.2x10^{-6}$	$7.2x10^{-6}$	$7.2x10^{-6}$	$7.2x10^{-6}$	$7.2x10^{-6}$	$7.2x10^{-6}$	$7.2x10^{-6}$	$7.2x10^{-6}$	$7.2x10^{-6}$	$7.2x10^{-6}$	$7.2x10^{-6}$	ASTM D696
Volume resistivity	Ω.m	$1.0x10^{9}$	$1.0x10^{9}$	$1.0x10^{9}$	$1.0x10^{9}$	$1.0x10^{9}$	$1.0x10^{9}$	$1.0x10^{9}$	$1.0x10^{9}$	$1.0x10^{9}$	$1.0x10^{9}$	$1.0x10^{9}$	$1.0x10^{9}$	DIN 53 481
Dielectric strength	kV/m	6,000	6,000	6,000	6,000	6,000	6,000	6,000	6,000	6,000	6,000	6,000	6,000	ASTM D149
Moisture uptake (maximum)	%	< 0.1%	< 0.1%	< 0.1%	< 0.1%	< 0.1%	< 0.1%	< 0.1%	< 0.1%	< 0.1%	< 0.1%	< 0.1%	< 0.1%	ISO 62-1980 / ASTM D570
Specific gravity		2.10	2.10	2.10	2.10	2.10	2.10	2.10	2.10	2.10	2.10	2.10	2.10	
Weight	kg/m	0.052	0.095	0.152	0.214	0.305	0.401	0.511	0.634	0.770	0.998	1.585	2.270	

[1] Guaranteed Ultimate Tensile Strength = Average – 3 Standard Deviations.

[2] The tensile properties of 38mm MateenBar cannot be guaranteed due to inability to achieve a valid bar as per the requirements of ASTM D7205 and ACI440.3R-04.

Design Requirements

Please refer to the appropriate design guide for your project or jurisdiction, e.g. ACI 440.1R “Guide for the Design and Construction of Concrete Reinforced with FRP Bars “for guidance on the use of GFRP Bars such as MateenBar.

Requirements
Do not substitute FRP reinforcing bars for steel or other supplier GFRP bars on an equal area basis, due to differences in material properties.
Design requirements on crack width, moment capacity and deflection with respect to material properties such as tensile strength, elastic modulus must be accounted for. Please consult with Pultron for structural design considerations.
In most cases, deflection will control design of concrete structures reinforced with FRP bars based on value of modulus of elasticity of FRP bars.
Stress under sustained load should be limited in accordance with the *ACI 440.1R Section 8.4 - Creep rupture and fatigue* recommendations for GFRP bars.
A minimum overlap length of 40 diameters is recommended.

Bends

MateenBar cannot be bent on site and must be fabricated into the required shape at the Pultron factory.

Due to the differences in GFRP manufacturing processes compared to steel rebar bends, there are limitations in the shape and sizes of bends available.

GFRP bends are significantly slower to fabricate than the steel rebar equivalent, please allow sufficient lead time in your schedule to avoid delays.

Please contact Pultron Composites to discuss your specific bends requirements and estimated lead times.

Durability

Property	Value	Test Method
Moisture Uptake	< 0.1%	ISO 62-1980 ASTM D 570
Resistance to alkaline environment	After 6 months (typical): • Tensile strength retention by 87% • Elastic modulus retained by 100% • Transverse shear strength retention by 92% • Short beam shear strength retention by 100% • Moisture absorption ≤ 0.4% • vi) Glass transition temperature retention by 100%	ACI 440.3R-4 B.6 pH: 12.6-13.0 at 60 ^{o}C

Manufacturing QC Testing Standards

MateenBar is a GFRP rebar manufactured from materials fully conforming to ACI 440-6 *Specification for Carbon and Glass Fiber-Reinforced Polymer Bar Materials for Concrete Reinforcement.*

MateenBar is manufactured from materials sourced on long term supply contracts with internationally approved suppliers. Raw materials purchased on the "spot market" are not used in MateenBar.

Quality Control requirements for raw materials:

Property	Value	Test Method / Comment
Resin Type ACI 440-6 6.2-Matrix Resins	Epoxy vinyl ester resin	Required for long term corrosion resistance and mechanical strength. *Polyester resin not allowed for permanent structures in accordance with ACI 440-6.*
Glass Type ACI 440-6 6.1-Fibers	ECR-glass	ECR Glass (ASTM D578) is essential due to long-term corrosion resistance and immunity to alkaline attack. *E-Glass not allowed*
Fillers ACI 440-6 6.3-Fillers and additives	Commercial Grade Inorganic Filler	Commercial grade inorganic fillers only used < 20% by mass.
Glass Content	> 75% by weight	ASTM D 3171

Manufacturing Quality Control Testing Standards:

A test certificate with every shipment shall be supplied which contains:

Test with every shipment	Test Method / Requirement
Incoming resin	Enthalpy of reaction and Glass transition temperature analysis by DSC prior processing Minimum of 1 per resin batch (may apply to more than one batch of dowel production)
Diameter	As measured from tolerance sheets at 2 hourly checks.
Glass fibre content ACI 440-6 7.1-Fibre Content	Fibre content > 55% by Volume Glass fibre content continuously monitored and manually confirmed every 2 hours
Short Beam Shear Strength (ASTM D 4475)	Average and standard deviation Derived from production tolerance sheets Short beam shear tests performed from each product stream every 2 hours
Glass transition temperature (ASTM E1640-04 DMTA Method) ACI 440-6 7.2-Glass Transition Temperature	Tg >= 100°C. Minimum of 1 test every 10,000 meters. For production runs of less than 10,000 meters, one test per batch is considered
Surface	That the surface is crack free, as per the two hourly tolerance sheet information

Handling and Storage Instructions

Instructions	Notes
Placement and Fastening	• Place Mateenbar in accordance to CRSI Placing Reinforcing Bars, unless otherwise specified. • Place Mateenbar accurately in accordance with approved placing drawings, schedules, typical details and notes. • Secure Mateenbar in formwork to prevent displacement by concrete placement or workers. • Fasten Mateenbar with nylon ties (preferable), coated or stainless steel tie wire.
Form Ties	• Use plastic or nylon form ties
Splicing	• Use lap splices
Tolerances	• Do not exceed placing tolerances as per ACI117
Cutting Mateenbar	• Mateenbar can be cut in the field with a standard handsaw or small grinder or cutoff saw. • For long blade life time use diamond blades.
Storage	• Mateenbar not used immediately should be kept on a pallet and covered with a tarp. • Mateenbar can be kept for an indefinite period of time without losing its performance.
Scrapes and cuts	• Nicks, scrapes, and cuts that do not exceed 5% of the depth of the bar are acceptable. • Beyond 5% we recommend replacement of the bar.
Handling	• It is recommended that gloves are worn when handling Mateenbar.
Comparison	• Mateenbar can be handled in the same way as steel equivalents in the field.
Chemical reaction	• With Mateenbar there is no concern regarding contact with salt, alkaline, diesel, gas, or other typical chemicals.

Warranty

Mateenbar is sold subject to Pultron Composite's standard warranty and nothing herein shall expand or extend such warranty.

Disclaimer

The data contained herein is considered representative of present production and believed to be reliable. Pultron Composites Limited reserves the right to make improvements in the product and process which may result in benefits and/or changes to some physical and mechanical properties.

Addendum A2

TRI Client: Maccaferri, Inc.
TRI Log #: E2371-04-09

Polymeric Anchor bar 20 mm

Concrete Block Dimensional Drawings

The testing herein is based upon accepted industry practice as well as the test method listed. Test results reported herein do not apply to samples other than those tested. TRI neither accepts responsibility for nor makes claim as to the final use and purpose of the material. TRI observes and maintains client confidentiality. TRI limits reproduction of this report, except in full, without prior approval of TRI.

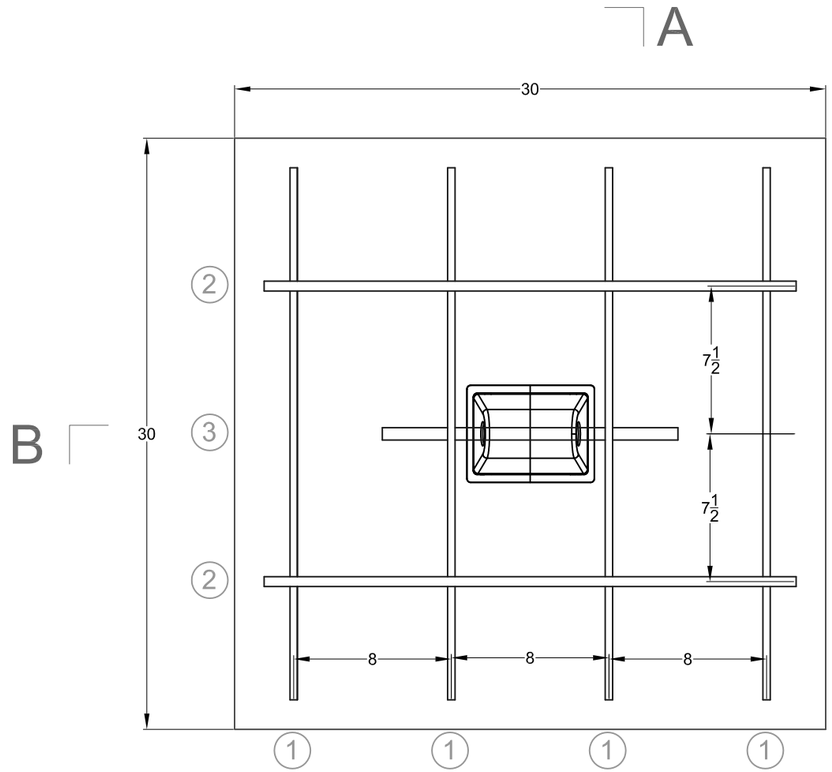

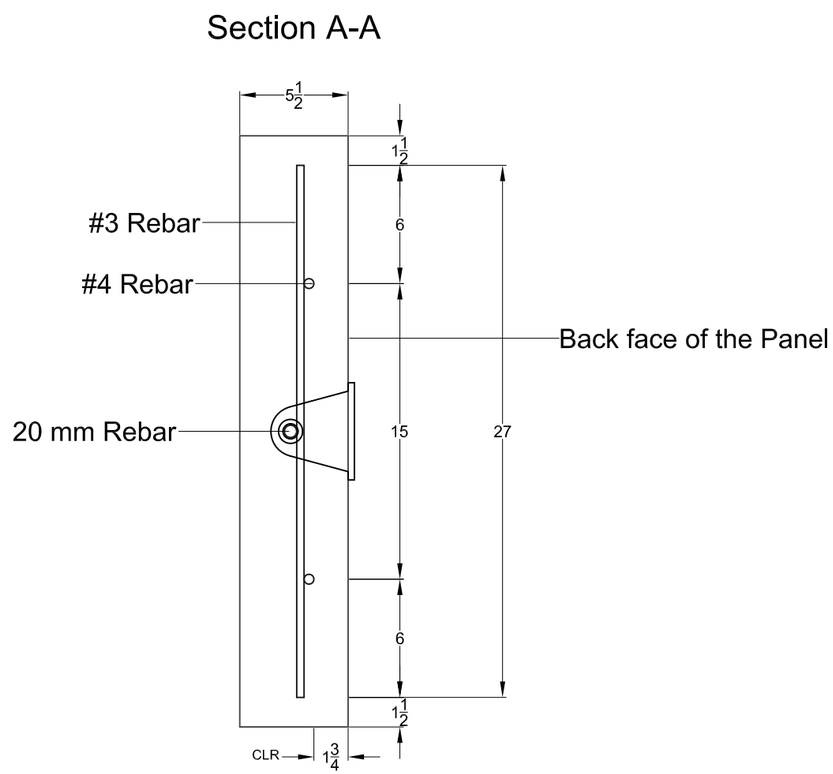

REINFORCEMENT SCHEDULE			
Ref.	Ø	Number	Length
1	# 3	4	27"
2	# 4	2	27"
3	20mm	1	15"

All lifting inserts to th back face (for handling)

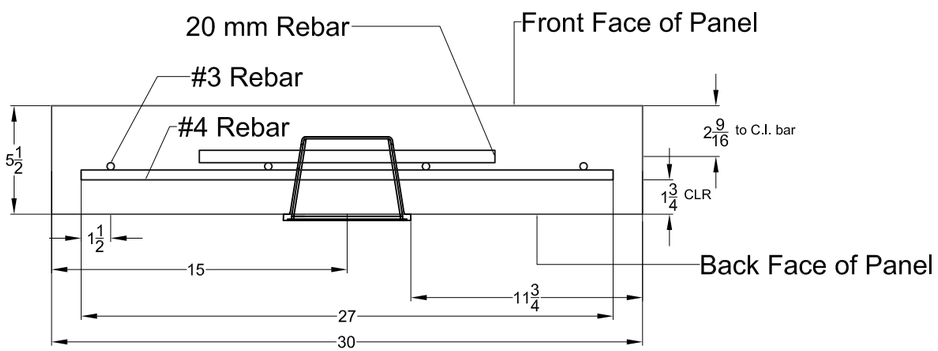

Notes:

(1) Reinforcing steel shall conform to ASTM A615 Grade 60 (uncoated)

(2) 20 mm Polymeric bars is provided by Maccaferri

(3) Concrete compressive strength at 28 days, fc'= 4000psi (max)

Maccaferri Inc. assumes no responsibility for the drawings and calculations it provides, as they must be intended as a general indication to suggest the proper use of its products.

Rev:	Issue / Revision:	Drawn:	App:	Date:

Drawing Title: Macres Samples Polymeric and Steel Bars

Project No: #

Client: ####

Drawing No: 1 / #

Units: Inch

Scale: NTS

Rev: # Printed on: 3/17/15

Designed: ## Date: ########

Drawn: ## Date: ########

Checked: ## Date: ########

Project: ####

NOT FOR CONSTRUCTION

MACCAFERRI
Maccaferri, Inc.
10303 Governor Lane Blvd.
Williamsport, MD 21795-3116 USA
Ph. (301) 223-6910 Fax (301) 223-6134

Addendum A2

TRI Client: Maccaferri, Inc.
TRI Log #: E2371-04-09

Polymeric Anchor bar 20 mm

Casting Photographs

The testing herein is based upon accepted industry practice as well as the test method listed. Test results reported herein do not apply to samples other than those tested. TRI neither accepts responsibility for nor makes claim as to the final use and purpose of the material. TRI observes and maintains client confidentiality. TRI limits reproduction of this report, except in full, without prior approval of TRI.

Addendum A2

TRI Client: Maccaferri, Inc.
TRI Log #: E2371-04-09

Polymeric Anchor bar 20 mm

Class A4 Concrete Mix Designs

The testing herein is based upon accepted industry practice as well as the test method listed. Test results reported herein do not apply to samples other than those tested. TRI neither accepts responsibility for nor makes claim as to the final use and purpose of the material. TRI observes and maintains client confidentiality. TRI limits reproduction of this report, except in full, without prior approval of TRI.

CEMEX

Main Office: 3990 E Concours St . #200 Ontario, California 91764
Phone (909) 974-5500 Fax (909) 974-5497 Dispatch 1-800-801-7625

STATEMENT OF MIX DESIGN FOR CONCRETE

Project: **Various Projects**
Various Locations

Date: 5/13/2014
Mix Design No.: 1418596

Contractor: **Surecast West**

Mix Description: 4000 PSI 1" Pump/Place Mix Design CLASS "1"

Strength:	4000 PSI at 28 Days	Batch Plants: Redlands	
Cementitious Material:	7.18 Sacks / Cu. Yd.	Aggregate Source: Cemex - Lytle Creek (91-36-0040)	
Penetration	2.0 Inches	Aggregate: CalTrans Section 90	
Slump:	4.00 Inches	Cement: ASTM C 150 - Type II Modified	
W/C Ratio:	0.44 By Weight	Fly Ash: ASTM C 618 - Class F	

ONE CUBIC YARD MIX PROPORTIONS, SSD:

MATERIAL		BATCH WEIGHT, LBS.	SP. GR.	ABS. VOL., CU. FT.
CEMENT	75 %	506	3.15	2.58
FLY ASH	25 %	169	2.30	1.18
WATER (TOTAL)	35.5 GALS.	296	1.00	4.74
AIR CONTENT	1 %	0		0.27
W. C. SAND	44 %	1318	2.62	8.06
# 4 - 3/8 IN. AGG.	0 %	0	2.62	0.00
# 3 - 1 IN. AGG.	56 %	1677	2.64	10.18
# 2 - 1.5 IN. AGG.	%	0	2.66	0.00
ADMIXTURE	15.1 to 25.3 fl. oz. of WRDA 64 (3 to 5/cwt cement) ASTM C 494 - Type A			

UNIT WEIGHT: 146.9 Lbs./Cu.Ft. 3965 Lbs. 27.00 Cu.Ft.

AGGREGATE GRADATIONS:

	Percent Passing U. S. Standard Sieves			Comb.	Caltrans
SIEVE SIZE	W C SAND	# 4 - 3/8 In.	# 3 - 1 In.	# 2 - 1.5 In.	Grading	Limit
1.5 In.	100	100	100	98	100.0	100.0
1 In.	100	100	97	27	98.3	90-100
3/4 In.	100	100	73	6	84.9	55-100
3/8 In.	100	90	16	2	53.0	45-75
No. 4	97	15	4	0	44.9	35-60
No. 8	81	5	3	0	37.3	27-45
No. 16	61	4	0	0	26.8	20-35
No. 30	38	0	0	0	16.7	12-25
No. 50	18	0	0	0	7.9	5-15
No. 100	7	0	0	0	3.1	1-8
No. 200	3	0	0	0	1.3	0-4

X Values

WCSand		1" x No. 4	
No. 16	X = 61	3/4"	X = 73
No. 30	X = 38	3/8"	X = 15
No. 50	X = 18		

Respectfully submitted
Cemex

Randy Johnston

Technical Services

REGISTERED PROFESSIONAL ENGINEER JAMES R. WADDELL C041219 EXP 3-31-15 CIVIL STATE OF CALIFORNIA

This mix design represents a combination of materials evaluated and established in accordance with section 1905B.3.1.1 Method B of the California Building Code. This mix is to be used only as designated, with no substitutions or additions. This mix to be used only for the job address indicated or as approved. FAILURE TO ADHERE TO ASTM STANDARDS IN SAMPLING, SLUMP, MAKING AND CURING SAMPLES, TRANSPORTING SAMPLES AND TESTING WILL RESULT IN A SUBSTANTIAL REDUCTION IN COMPRESSIVE STRENGTHS LISTED ABOVE. Notes: SOUTHWEST SPECIAL TESTING HAS NOT SEEN THE SOILS REPORT FOR THE PROJECT. CONTRACTOR MUST ADHERE TO THE GUIDELINES OF UBC TABLE 19.

Addendum A3

TRI Client: Maccaferri, Inc.
TRI Log #: E2371-04-09

Concrete Break Strength Test Results

Concrete Laboratory Credentials

The testing herein is based upon accepted industry practice as well as the test method listed. Test results reported herein do not apply to samples other than those tested. TRI neither accepts responsibility for nor makes claim as to the final use and purpose of the material. TRI observes and maintains client confidentiality. TRI limits reproduction of this report, except in full, without prior approval of TRI.

Addendum A3

TRI Client: Maccaferri, Inc.
TRI Log #: E2371-04-09

Concrete Break Strength Test Results

The testing herein is based upon accepted industry practice as well as the test method listed. Test results reported herein do not apply to samples other than those tested. TRI neither accepts responsibility for nor makes claim as to the final use and purpose of the material. TRI observes and maintains client confidentiality. TRI limits reproduction of this report, except in full, without prior approval of TRI.

SURECAST WEST

PROJECT	Macre Test Samples	DATE	6/2/2015
LOCATION	SURECAST WEST	DAY	Tuesday

CONCRETE INFORMATION

CONC. SUPPLIER	CEMEX	BATCH TIME	9:22 AM	CONCRETE	TYPE II
LOAD NUMBER	4	CAST TIME	9:35 AM	MIX DESIGN	1418596
TICKET NUMBER	25890743	FINISH TIME	10:08 AM	USE	PANELS

TEST RESULTS

WEATHER	sunny	AIR CONTENT %	N/A	VOLUME cy	10.5
AMBIENT TEMP.	71	SLUMP "	4.25	UNIT WEIGHT lb	*na*
CONCRETE TEMP.	80	KELLY BALL	na	CYLINDERS	5

COMPRESSION TEST RESULTS

CYLINDER MARK	DIA. "in"	DATE TESTED	AGE DAYS	MAX LOAD (LBS.)	COMPRESSIVE STRENGTH psi	MPa	TESTED BY	na	COMMENTS
A	6.0	6-12-15	10	97,590	3580	-	AJS		
B	6.0	6-12-15	10	102,340	3620	-	AJS		
C									
D									
				AVG.	3600				

BREAK TYPES TYPE 1 TYPE 2 TYPE 3 TYPE 4 TYPE 5

PRODUCT PRODUCED

MSE PANELS

6-12-15
DATE OF REPORT

TECHNICIAN SIGNATURE

SURECAST WEST

PROJECT	Macre Test Samples	DATE	6/2/2015
LOCATION	SURECAST WEST	DAY	Tuesday

CONCRETE INFORMATION					
CONC. SUPPLIER	CEMEX	BATCH TIME	9:22 AM	CONCRETE	TYPE II
LOAD NUMBER	4	CAST TIME	9:35 AM	MIX DESIGN	1418596
TICKET NUMBER	25890743	FINISH TIME	10:08 AM	USE	PANELS

TEST RESULTS					
WEATHER	sunny	AIR CONTENT %	N/A	VOLUME cy	10.5
AMBIENT TEMP.	71	SLUMP "	4.25	UNIT WEIGHT lb	*na*
CONCRETE TEMP.	80	KELLY BALL	na	CYLINDERS	5

COMPRESSION TEST RESULTS

CYLINDER MARK	DIA. "in"	DATE TESTED	AGE DAYS	MAX LOAD (LBS.)	COMPRESSIVE STRENGTH psi	MPa	TESTED BY	na	COMMENTS
A	6.0	6-15-15	13	116,550	4120	-	AJS		
B	6.0	6-15-15	13	115,670	4090	-	AJS		
C									
D									
				AVG. -	4105				

BREAK TYPES TYPE 1 (X) TYPE 2 TYPE 3 TYPE 4 TYPE 5

PRODUCT PRODUCED

MSE PANELS

6-15-15
DATE OF REPORT

TECHNICIAN SIGNATURE

Addendum A3

TRI Client: Maccaferri, Inc.
TRI Log #: E2371-04-09

Concrete Laboratory Credentials

The testing herein is based upon accepted industry practice as well as the test method listed. Test results reported herein do not apply to samples other than those tested. TRI neither accepts responsibility for nor makes claim as to the final use and purpose of the material. TRI observes and maintains client confidentiality. TRI limits reproduction of this report, except in full, without prior approval of TRI.

hereby Certifies that

Andrew J. Soria

has met the prescribed requirements for

Quality Control
Personnel Certification
Level III

Issued Date: October 28, 2010

Expiration Date: 10/5/2015

Certification No.: 11484

PCI™
Certified Level III
Technician/Inspector

James Toscas, President

STATE OF CALIFORNIA - BUSINESS, TRANSPORTATION AND HOUSING AGENCY EDMUND G. BROWN Jr., Governor

DEPARTMENT OF TRANSPORTATION
Southern Regional Independent Assurance
13970 Victoria St.
Fontana, CA 92336

CALTRANS QUALIFIED LABORATORY INSPECTION REPORT

Form TL-0113 (Southern IA, 01-06)

Expiration date: March 12, 2016
Inspection by: Daniel Stewart
IA No.: 111
Phone: (909) 350-9096
File: Materials Category 500

Laboratory: Surecast West
Address: 8203 Alabama Street
City: Highland State: CA Zip: 92346
Lab Manager: Andrew Soria e-mail: Rustysurecast@hughes.net
Phone #: (909) 335-6336 Fax #: (909) 335-6331

A certified Independent Assurance (IA) Sampler and Tester visited this laboratory on February 27, 2014. Only equipment to be used on Caltrans construction projects and/or local construction projects on the National Highway System projects was checked for qualification.

At the time of Caltrans Qualification, this laboratory had all necessary equipment to perform the tests methods indicated below. Testing personnel shall be Caltrans Qualified and possess a current Caltrans Certificate of Proficiency Form TL-0111 prior to performing any sampling or testing.

CT 504 CT 518 CT 521 CT 539 CT 540 CT 556 CT 557

A visual check was performed and documents provided as necessary for the following items:

- ☒ Facility Safety Manual
- ☒ Laboratory Procedures Manual
- ☒ Laboratory Quality Control Manual
- ☒ Proper Test Equipment
- ☒ Copies of current applicable test procedures
- ☒ Calibration and Service Documentation
- ☒ Calibration/Service stickers affixed to test equipment

Laboratory Qualification is valid for one year

On March 3, 2015 this laboratory was qualified by:

Daniel Stewart
Southern Regional
Independent Assurance

Project Number: 2020.548.001

DESIGN COMPUTATIONS FOR

Stone Strong MacBox Connection

PREPARED FOR:

Stone Strong Systems
13460 Chandler Road
Suite 100
Omaha, Nebraska 68138

10-19-2020

PREPARED BY:

DELTA
SPECIALTY PRECAST CONCRETE ENGINEERS

State License # 111870

860 Hooper Road, Endwell, New York 13760
TEL: 607-231-6600 FAX: 607-231-6650
EMAIL: precast@delta-eas.com
www.delta-eas.com

IT IS A VIOLATION OF LAW FOR ANY PERSON, UNLESS THEY ARE ACTING UNDER THE DIRECTION OF A LICENSED PROFESSIONAL ENGINEER, ARCHITECT, LANDSCAPE ARCHITECT, OR LAND SURVEYOR, TO ALTER AN ITEM IN ANY WAY. IF AN ITEM BEARING THE STAMP OF A LICENSED PROFESSIONAL IS ALTERED, THE ALTERING ENGINEER, ARCHITECT, LANDSCAPE ARCHITECT, OR LAND SURVEYOR SHALL STAMP THE DOCUMENT AND INCLUDE THE NOTATION "ALTERED BY" FOLLOWED BY THEIR SIGNATURE, THE DATE OF SUCH ALTERATION, AND A SPECIFIC DESCRIPTION OF THE ALTERATION.

DELTA
SPECIALTY PRECAST CONCRETE ENGINEERS
860 Hooper Road, Endwell, NY 13760
www.delta-eas.com
Phone: (607) 231-6600
Fax: (607) 231-6650

JOB	2020.548.001			
DESCRIPTION	Macbox Insert Connection			
SHEET NO.		OF	SCALE	
CALCULATED BY	YL		DATE	10/18/2020
CHECKED BY			DATE	

Table of Contents

Analysis Summary - Recommended Macbox Insert Capacity	Page 3
Maxbox Insert Capacity Based on Anchor Embedment Theory	Page 4 - 12
24SF-P and 24SF-HDP Units Risa Analysis	Page 13 - 30
6SF-P and 6SF-HDP Units Risa Analysis	Page 31 - 50
6-28-P and 6-28-HDP Units Risa Analysis	Page 51 - 75
Paraweb/Macbox Insert Units Reinforcing Information	Page 76 - 86

DELTA
SPECIALTY PRECAST CONCRETE ENGINEERS
860 Hooper Road, Endwell, NY 13760
www.delta-eas.com
Phone: (607) 231-6600
Fax: (607) 231-6650

JOB	2020.548.001		
DESCRIPTION	Macbox Connection		
SHEET NO.	OF	SCALE	
CALCULATED BY	YL	DATE	10/19/2020
CHECKED BY		DATE	

Estimated Macbox Connection Capacity

Reduction Factor ϕ = 0.6 ACI 318-14 17.3.3

Note: 0.6 instead of 0.7 is used to account for uncertainties, conservative.

Unit	Ultimate Capacity (kips)	**Recommended Capacity (kips)**
24SF-P	14.00	**8.40**
24SF-HDP	17.04	**10.22**
6SF-P	14.00	**8.40**
6SF-HDP	17.06	**10.24**
6-28-P	14.00	**8.40**
6-28-HDP	17.06	**10.24**

Note: recommended capacitys are for factored loads.

DELTA
SPECIALTY PRECAST CONCRETE ENGINEERS
860 Hooper Road, Endwell, NY 13760
www.delta-eas.com
Phone: (607) 231-6600
Fax: (607) 231-6650

Item 5.

JOB	2020.548.001			
DESCRIPTION	Macbox Insert Connection			
SHEET NO.		OF	SCALE	
CALCULATED BY	YL		DATE	10/18/2020
CHECKED BY			DATE	

Macbox Insert Capacity Based on Anchor Embedment Theory

MACCAFERRI

Maccaferri MacBox Connecting System

Polymeric Cavity Connection Assembly

The Maccaferri connection assembly is composed of a (High Density Polyethylene (HDPE) cavity insert box secured by a steel rebar (anchor bar) in the precast concrete element. The steel embedded rebar is encased in a polymeric sleeve for corrosion protection. The sleeve prevents water and concrete for entering during the casting phase and prevents damage to

the polymeric soil reinforcing strips in contact with the deformed rebar.

The connection system is supplied with a HDPE lid, which is closed during the casting phase to prevent the wet concrete from entering the cavity insert box.

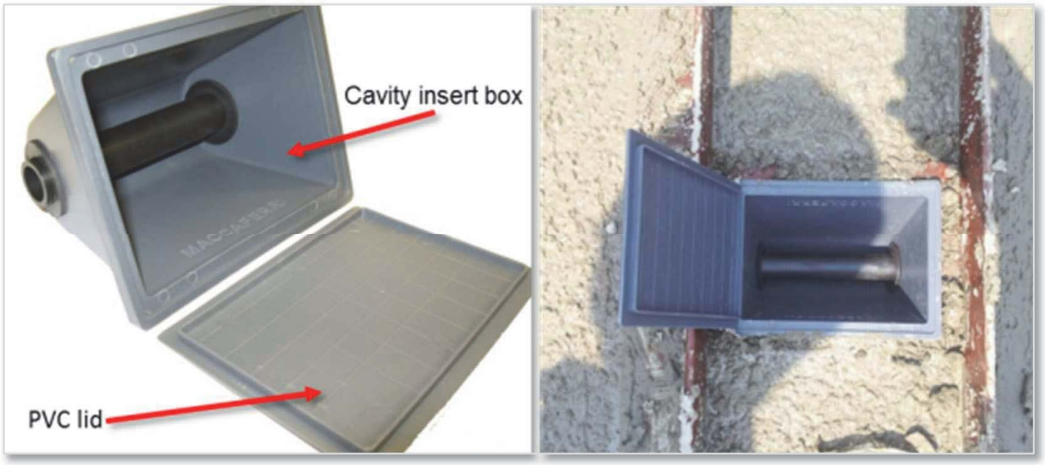

Item 5.

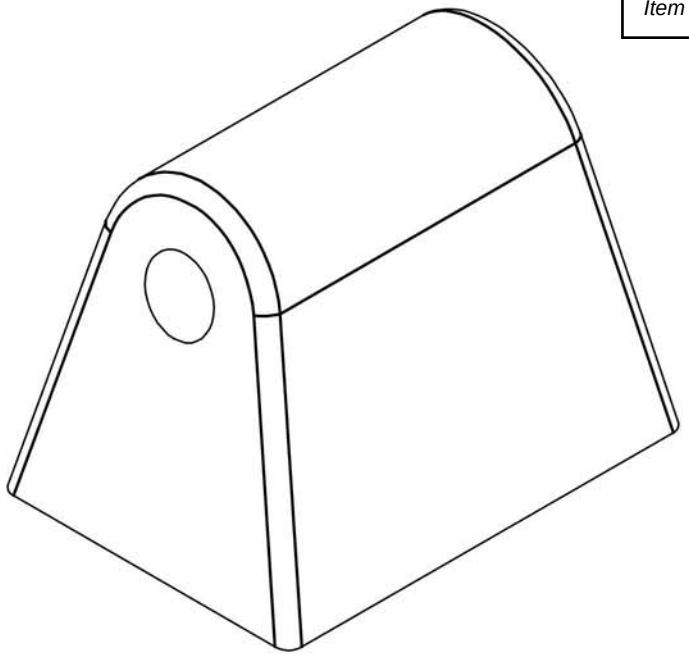

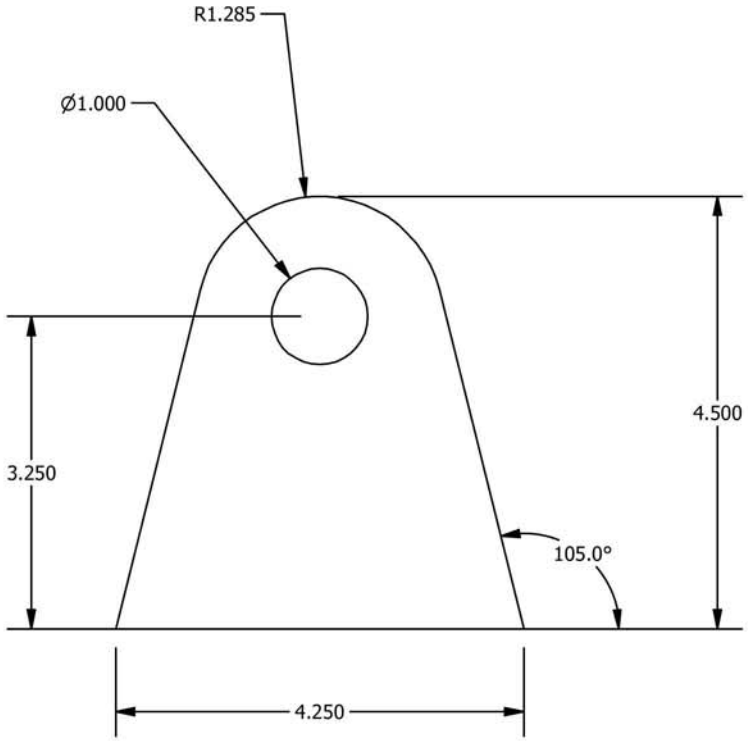

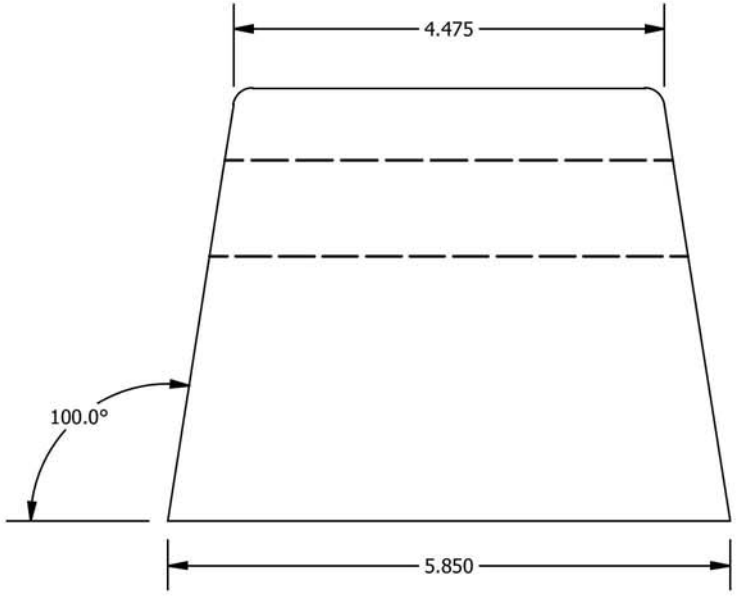

MATERIAL: A36 PLATE	DATE: 12/6/2017	REV : A	DRAWN BY: D. HOWARD	APPROVED BY: S. EVANS
PROPRIETARY AND CONFIDENTIAL THE INFORMATION CONTAINED IN THIS DRAWING IS THE SOLE PROPERTY OF TLK PRECISION. ANY REPRODUCTION IN PART OR AS A WHOLE WITHOUT THE WRITTEN PROMISSION OF TLK PRECISION IS PROHIBITED	UNLESS OTHERWISE NOTED .X : ± .020 .XX : ± .010 .XXX : ± .005		TITLE : STRAP RECESS	
			PART NUMBER : STRAP RECESS	

CREATED FROM DRAWING : NA

TLK PRECISION

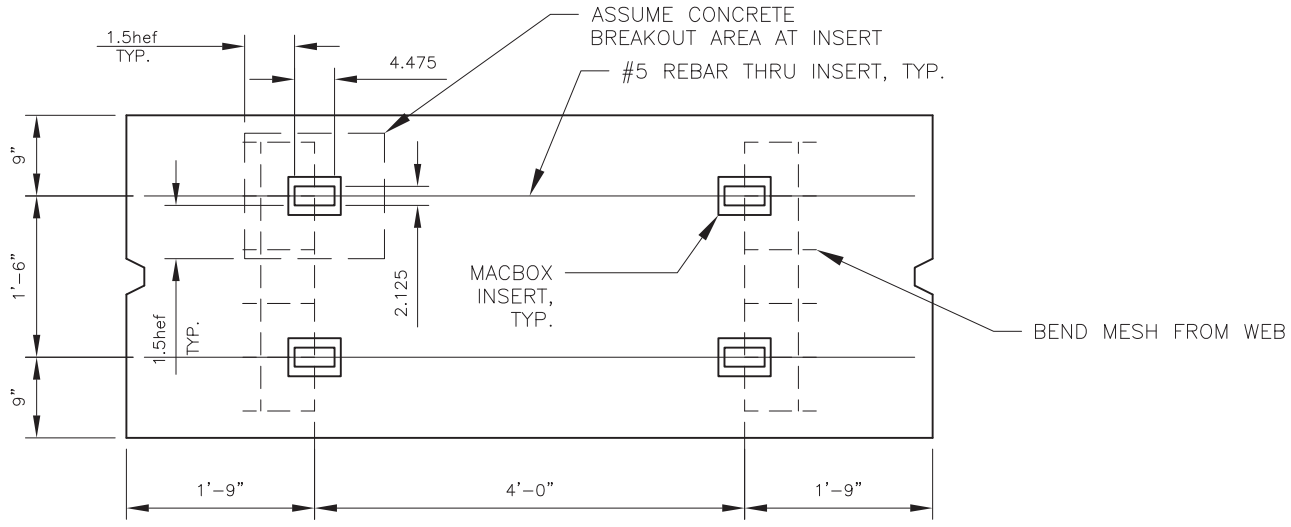

REAR SHELL ELEVATION VIEW

24SF PARAWEB UNIT (24SF-P) - MESH OPTION

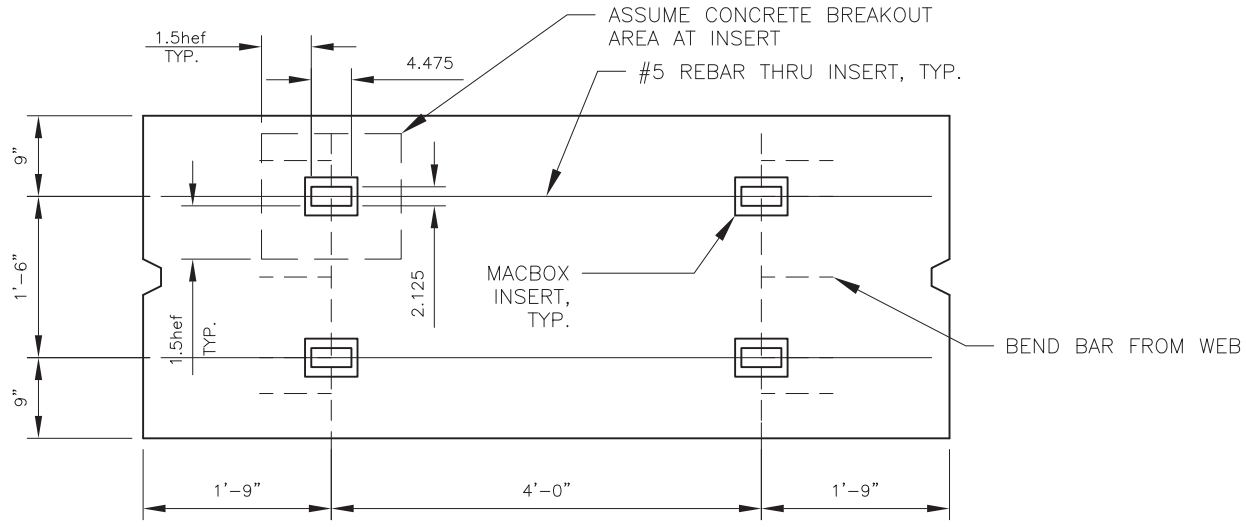

REAR SHELL ELEVATION VIEW

24SF PARAWEB UNIT (24SF-P) - REBAR OPTION

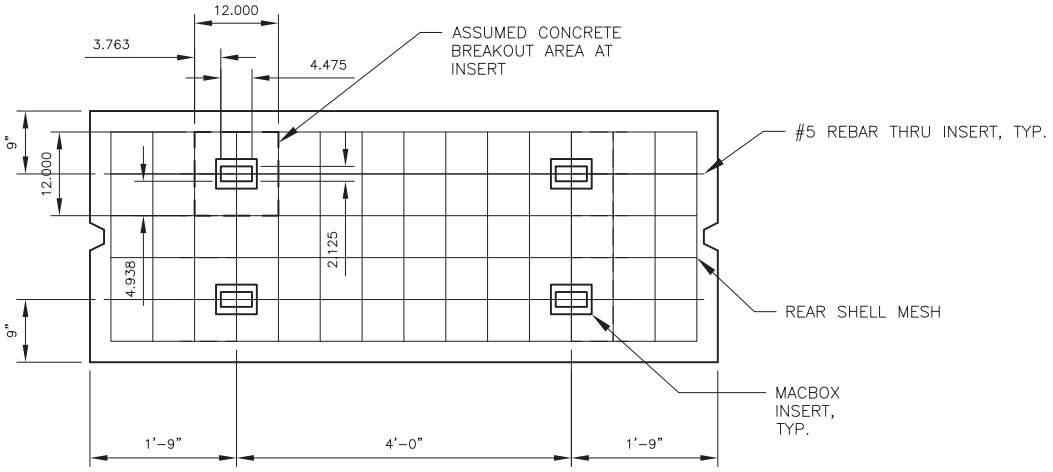

REAR SHELL ELEVATION VIEW

24SF HEAVY DUTY PARAWEB UNIT (24SF-HDP) - MESH OPTION

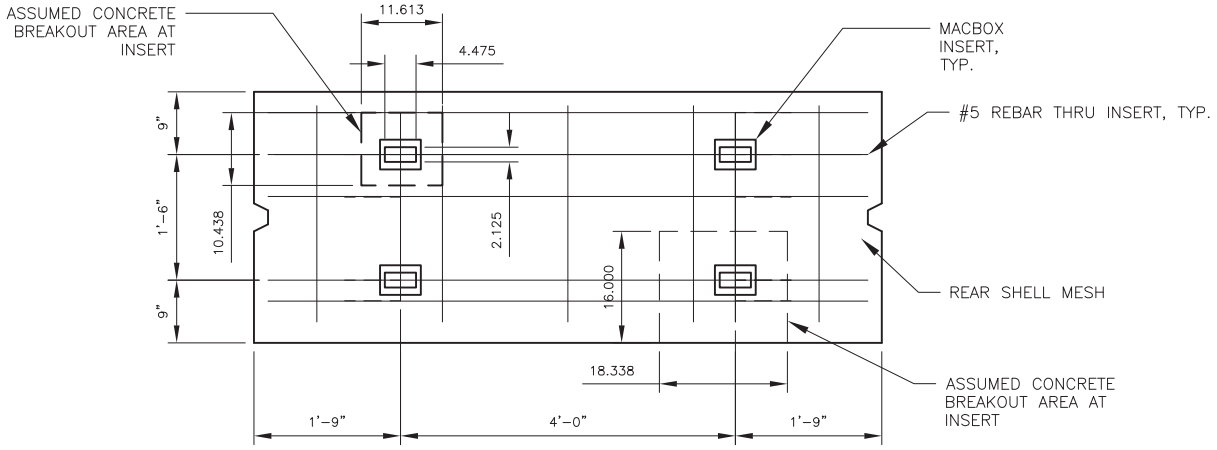

REAR SHELL ELEVATION VIEW

24SF HEAVY DUTY PARAWEB UNIT (24SF-HDP) - REBAR OPTION

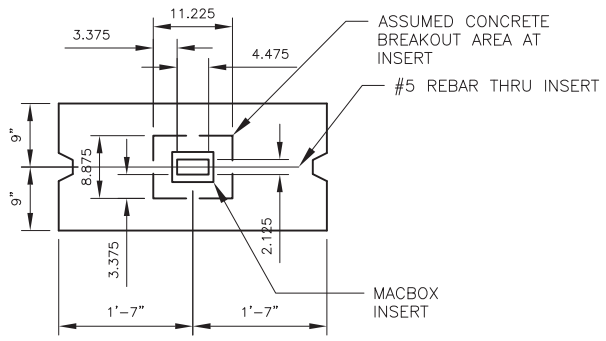

REAR SHELL ELEVATION VIEW

6SF PARAWEB UNIT (6SF-P)

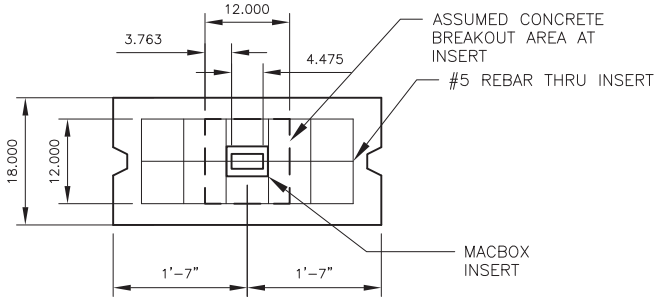

REAR SHELL ELEVATION VIEW

6SF HEAVY DUTY PARAWEB UNIT (6SF-HDP) - MESH OPTION

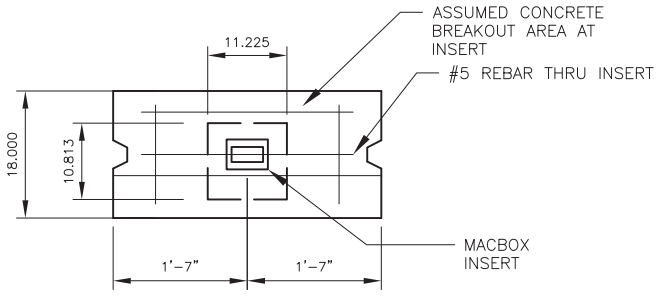

REAR SHELL ELEVATION VIEW

6SF HEAVY DUTY PARAWEB UNIT (6SF-HDP) - REBAR OPTION

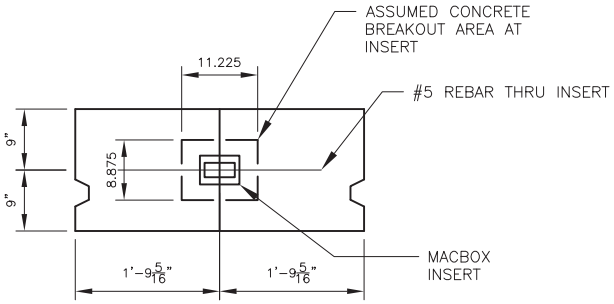

REAR SHELL ELEVATION VIEW

6-28 PARAWEB UNIT (6-28-P)

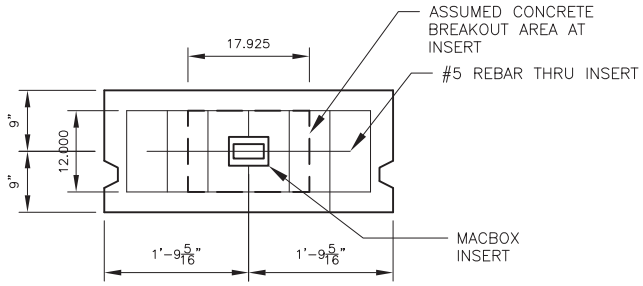

REAR SHELL ELEVATION VIEW

6-28 HEAVY DUTY PARAWEB UNIT (6-28-HDP) - MESH OPTION

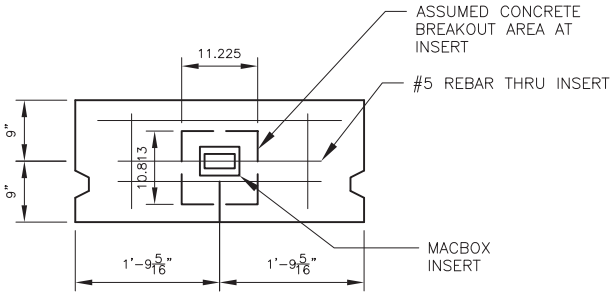

REAR SHELL ELEVATION VIEW

6-28 HEAVY DUTY PARAWEB UNIT (6-28-HDP) - REBAR OPTION

DELTA
SPECIALTY PRECAST CONCRETE ENGINEERS
860 Hooper Road, Endwell, NY 13760
www.delta-eas.com
Phone: (607) 231-6600
Fax: (607) 231-6650

Item 5.

JOB	2020.548.001		
DESCRIPTION	Macbox Connection		
SHEET NO.	OF	SCALE	
CALCULATED BY	YL	DATE	10/14/2020
CHECKED BY		DATE	

Use Concrete Tension Breakout Strength to Estimate the Connection Capacity ACI 318-14 17.4.2

$Ncb = A_{Nc}/A_{Nco}\ \psi_{ed,N}\psi_{c,N}\psi_{cp,N}\ Nb$ Eqn. 17.4.2.1a

$Nb = kc\lambda_a fc'^{0.5} hef^{1.5} =$ 5.12 kips

hef =	2.25	in	
$A_{Nco} = 9hef^2 =$	45.563	in^2	
$\lambda_a =$	1		
kc =	24		
fc' =	4000	psi	
$\psi_{ed,N} =$	1.0		17.4.2.5
$\psi_{c,N} =$	1.25		17.4.2.6
$\psi_{cp,N} =$	1.00		17.4.2.7

24SF Paraweb Unit (24SF-P) Mesh Option and Rebar Option

Ncb = 14.00 kips

Assume Conc. Break Area Length =	11.23	in
Assume Conc. Break Area Width =	8.88	in
$A_{NC} =$	99.622	in^2

24SF Heavy Duty Paraweb Unit (24SF-HDP) Mesh Option

Ncb = 20.24 kips

Assume Conc. Break Area Length =	12.00	in
Assume Conc. Break Area Width =	12.00	in
$A_{NC} =$	144	in^2

24SF Heavy Duty Paraweb Unit (24SF-HDP) Rebar Option

Ncb = 17.04 kips

Assume Conc. Break Area Length =	11.61	in
Assume Conc. Break Area Width =	10.44	in
$A_{NC} =$	121.22	in^2

6SF Paraweb Unit (6SF-P)

Ncb = 14.00 kips

Assume Conc. Break Area Length =	11.23	in
Assume Conc. Break Area Width =	8.88	in
$A_{NC} =$	99.622	in^2

Item 5.

DELTA
SPECIALTY PRECAST CONCRETE ENGINEERS
860 Hooper Road, Endwell, NY 13760
www.delta-eas.com
Phone: (607) 231-6600
Fax: (607) 231-6650

JOB	2020.548.001		
DESCRIPTION	Macbox Connection		
SHEET NO.		OF	SCALE
CALCULATED BY	YL	DATE	10/14/2020
CHECKED BY		DATE	

Use Concrete Tension Breakout Strength to Estimate the Connection Capacity (Con't)

6SF Heavy Duty Paraweb Unit (6SF-HDP) Mesh Option

Ncb = 20.24 kips

Assume Conc. Break Area Length = 12.00 in
Assume Conc. Break Area Width = 12.00 in
A_{NC} = 144 in^2

6SF Heavy Duty Paraweb Unit (6SF-HDP) Rebar Option

Ncb = 17.06 kips

Assume Conc. Break Area Length = 11.23 in
Assume Conc. Break Area Width = 10.81 in
A_{NC} = 121.38 in^2

6-28 Paraweb Unit (6-28-P)

Ncb = 14.00 kips

Assume Conc. Break Area Length = 11.23 in
Assume Conc. Break Area Width = 8.88 in
A_{NC} = 99.622 in^2

6-28 Heavy Duty Paraweb Unit (6-28-HDP) Mesh Option

Ncb = 30.23 kips

Assume Conc. Break Area Length = 17.93 in
Assume Conc. Break Area Width = 12.00 in
A_{NC} = 215.1 in^2

6-28 Heavy Duty Paraweb Unit (6-28-HDP) Rebar Option

Ncb = 17.06 kips

Assume Conc. Break Area Length = 11.23 in
Assume Conc. Break Area Width = 10.81 in
A_{NC} = 121.38 in^2

DELTA
SPECIALTY PRECAST CONCRETE ENGINEERS
860 Hooper Road, Endwell, NY 13760
www.delta-eas.com
Phone: (607) 231-6600
Fax: (607) 231-6650

Item 5.

JOB	2020.548.001			
DESCRIPTION	Macbox Insert Connection			
SHEET NO.		OF	SCALE	
CALCULATED BY	YL		DATE	10/18/2020
CHECKED BY			DATE	

24SF-P and 24SF-HDP Units Risa Analysis

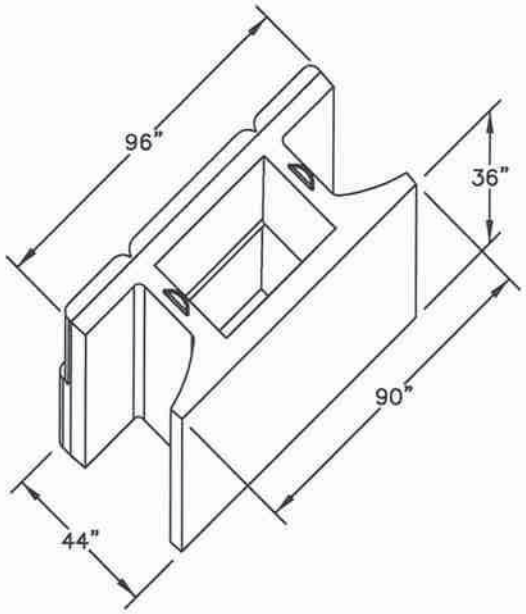

REAR VIEW
STONE STRONG 24SF UNIT

NOT TO SCALE

DISCLAIMER:

These typical details are preliminary and conceptual in nature. They are provided for general information purposes only. Anyone making use of these details and related information does so at their own risk and assumes all liability for such use. Site specific design should be performed by a licensed Professional Engineer based on actual site conditions, materials, and local practices.

Stone Strong LLC retains al common law, statutory, and other reserved rights to these drawings including the copyright. Limited license is granted to copy, reproduce, or modify the details to prepare construction drawings for Stone Strong retaining walls. Stone Strong LLC makes no warranties, either expressed or implied, of merchantability or fitness for any particular purpose, and accepts no responsibility for the accuracy, suitability, or completeness of information contained herein.

STONE STRONG SYSTEMS

www.stonestrong.com

PROJECT

COMPONENTS
STONE STRONG SYSTEMS

DATE: 2/10/16 | FILE: 05_Block.24sf.Rear

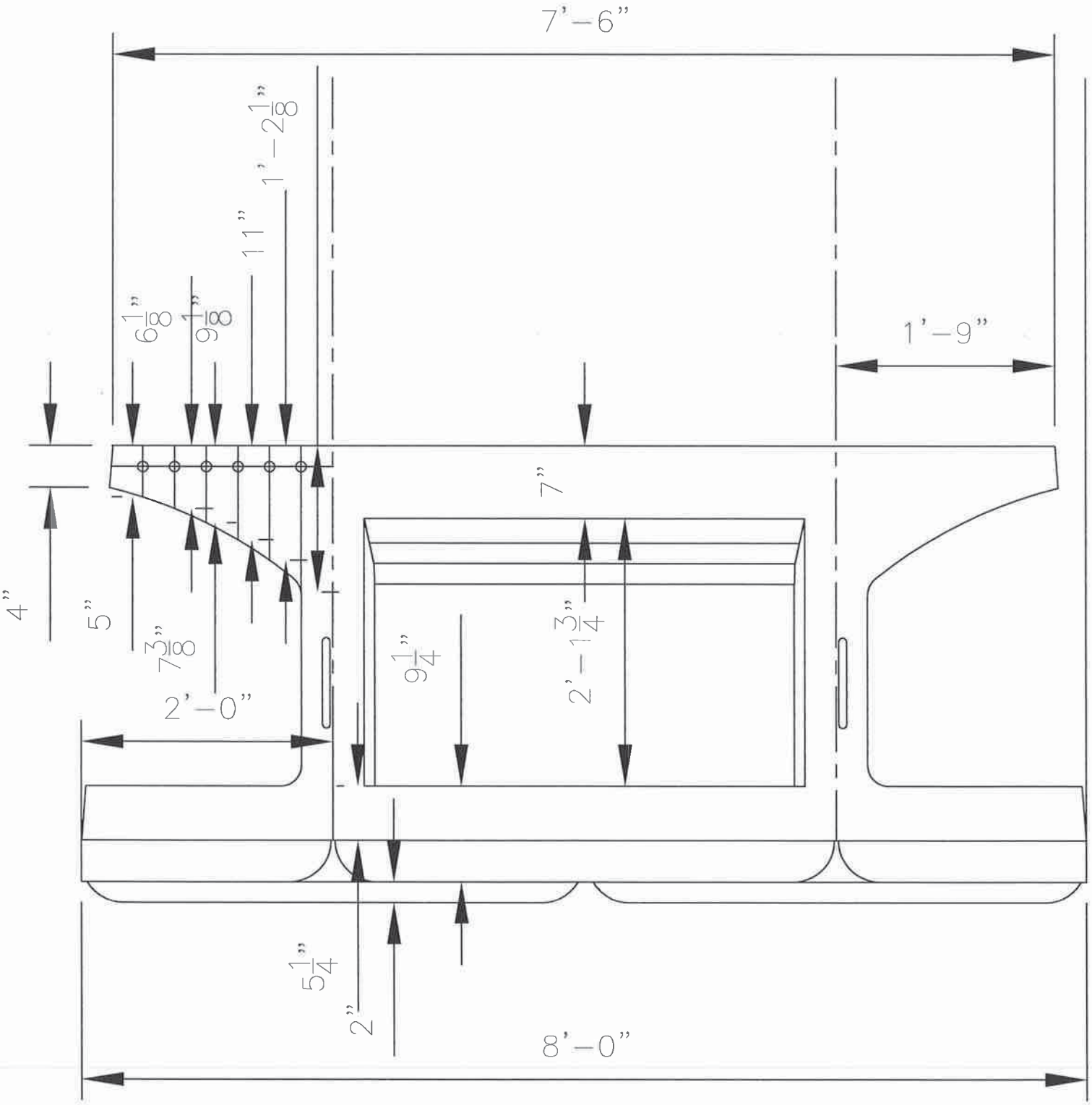

24 SF UNIT

Item 5.

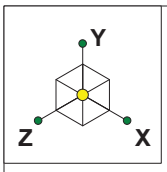

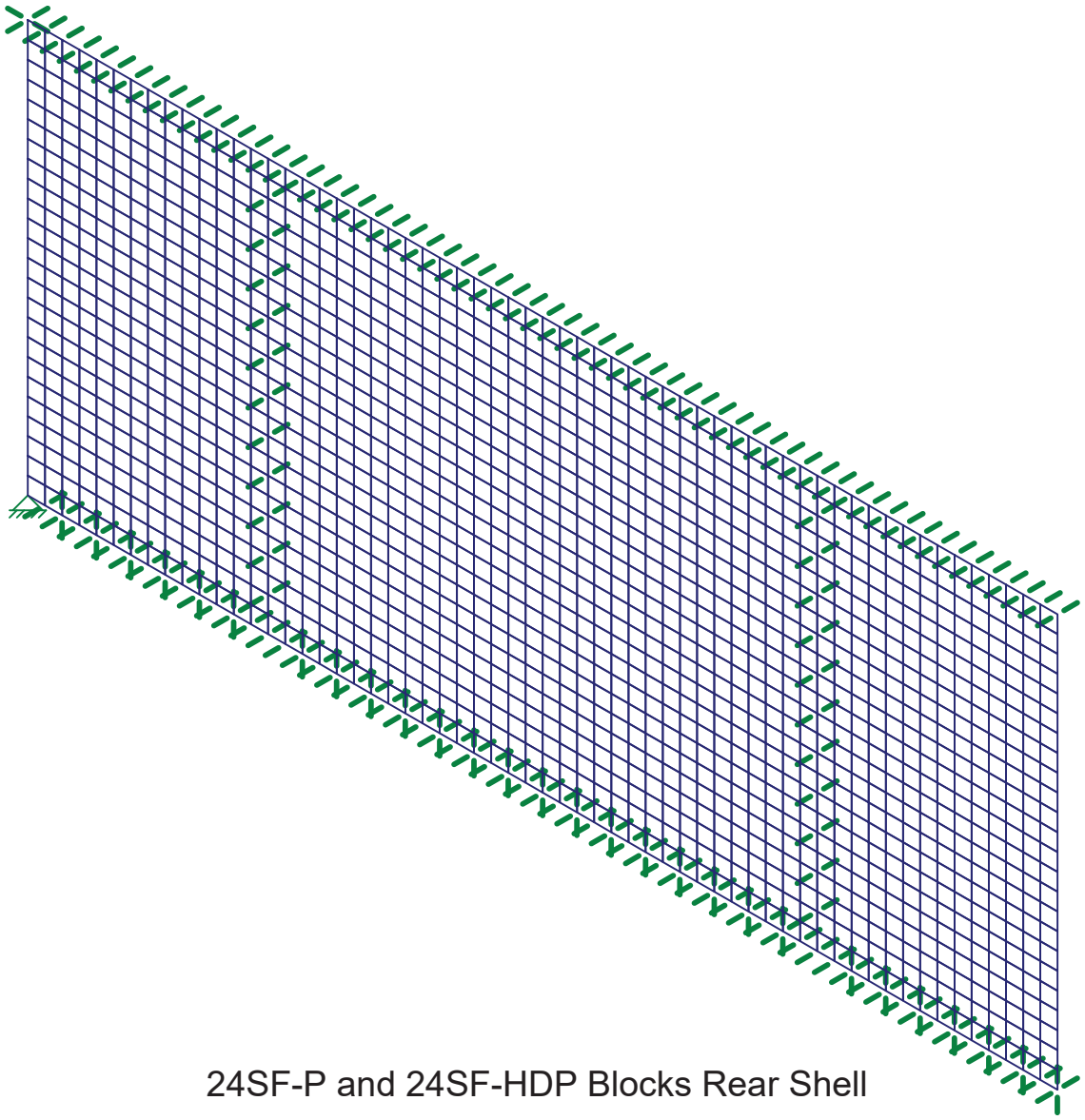

24SF-P and 24SF-HDP Blocks Rear Shell

Delta Engineers,Inc	24SF-P and 24SF-HDP	SK - 1
YL		Oct 14, 2020 at 8:36 PM
2020.548.001		24SF-P and 24SF-HDP.r3d

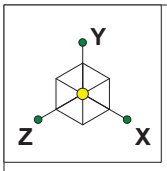

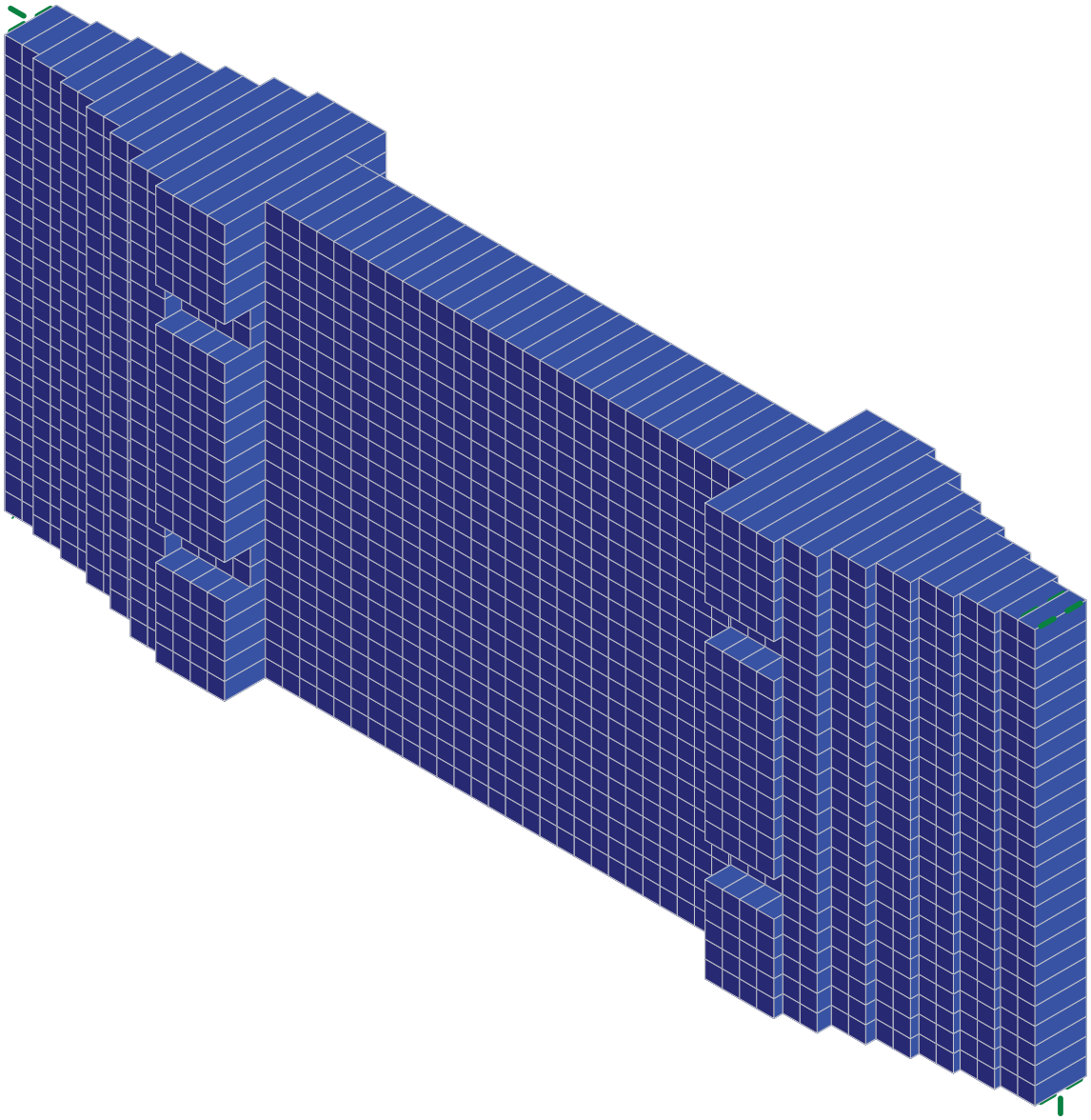

Delta Engineers,Inc	24SF-P and 24SF-HDP	SK - 2
YL		Oct 14, 2020 at 8:37 PM
2020.548.001		24SF-P and 24SF-HDP.r3d

Item 5.

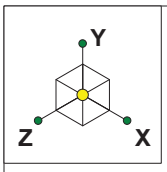

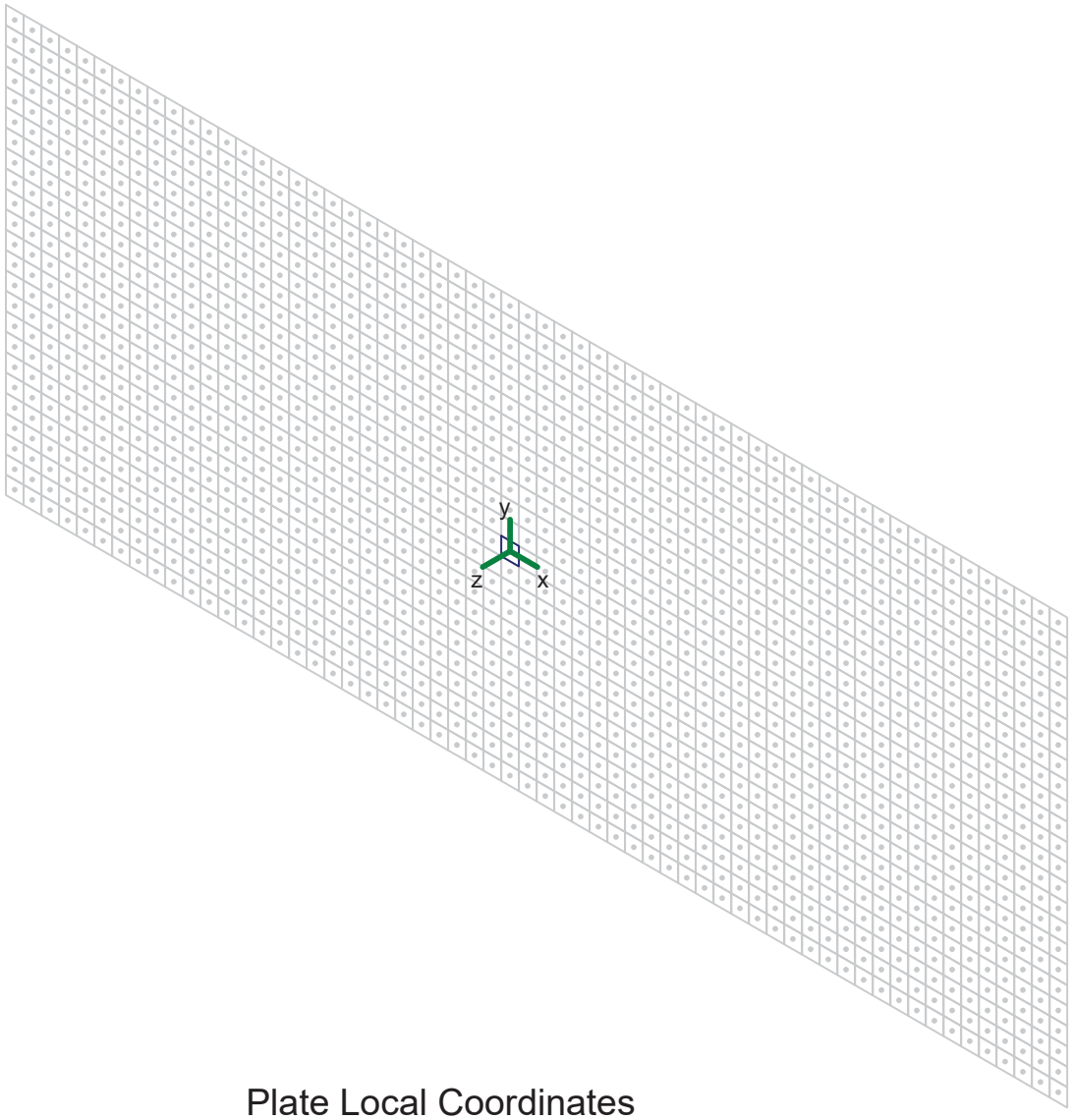

Plate Local Coordinates

Delta Engineers,Inc	24SF-P and 24SF-HDP	SK - 3
YL		Oct 14, 2020 at 8:38 PM
2020.548.001		24SF-P and 24SF-HDP.r3d

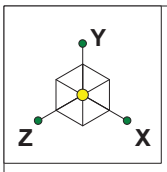

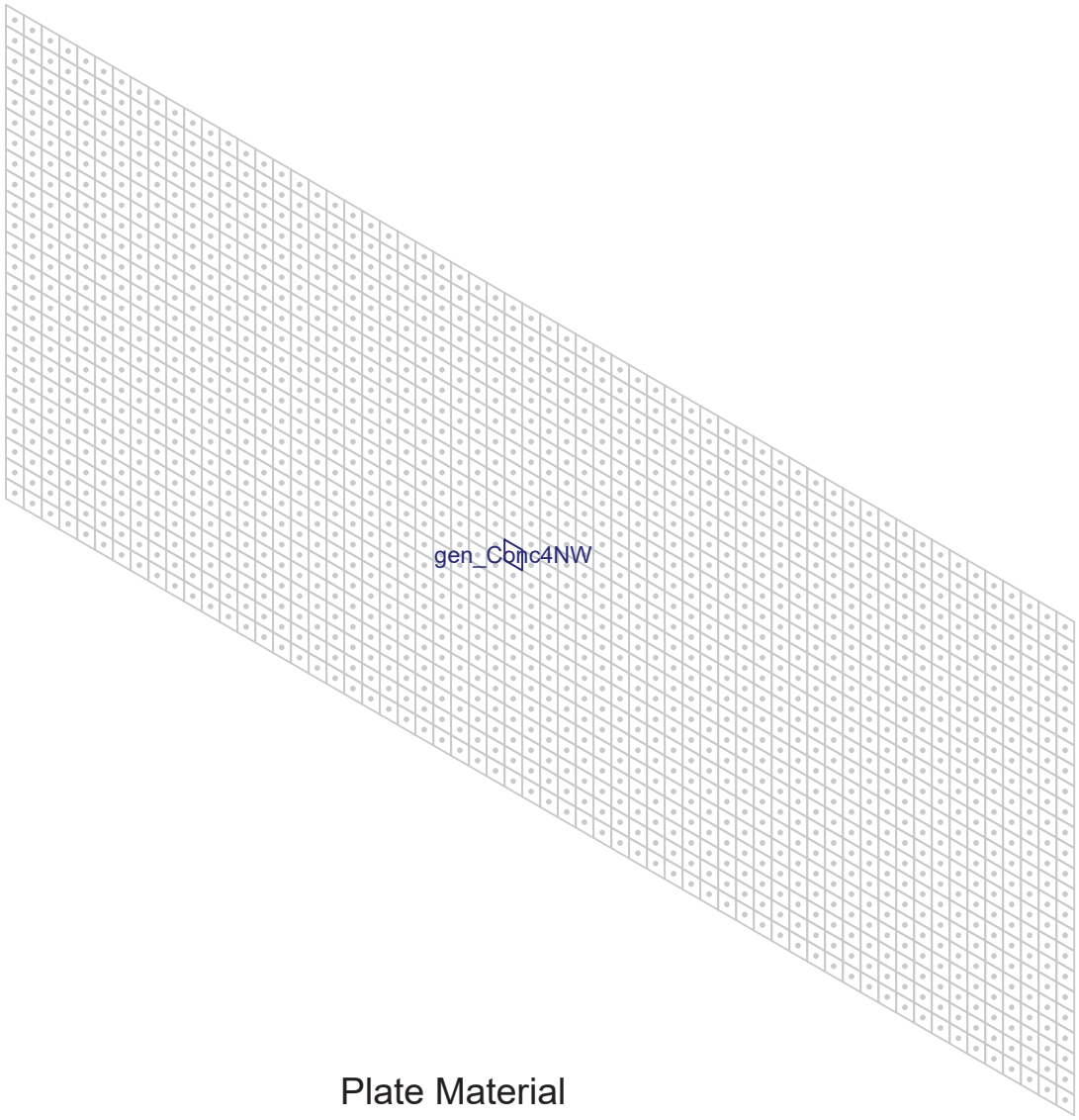

Plate Material

Delta Engineers,Inc	24SF-P and 24SF-HDP	SK - 4
YL		Oct 14, 2020 at 8:40 PM
2020.548.001		24SF-P and 24SF-HDP.r3d

Item 5.

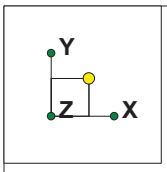

4.5	4.5	5.56	5.56	6.75	6.75	8.25	8.25	10.06	10.06	12.56	12.56	14.125	14.125	14.125	14.125	7	7	7
4.5	4.5	5.56	5.56	6.75	6.75	8.25	8.25	10.06	10.06	12.56	12.56	9.625	9.625	9.625	9.625	7	7	7

Plate Thickness

Delta Engineers,Inc	24SF-P and 24SF-HDP	SK - 5
YL		Oct 16, 2020 at 3:57 PM
2020.548.001		24SF-P and 24SF-HDP.r3d

Item 5.

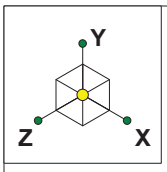

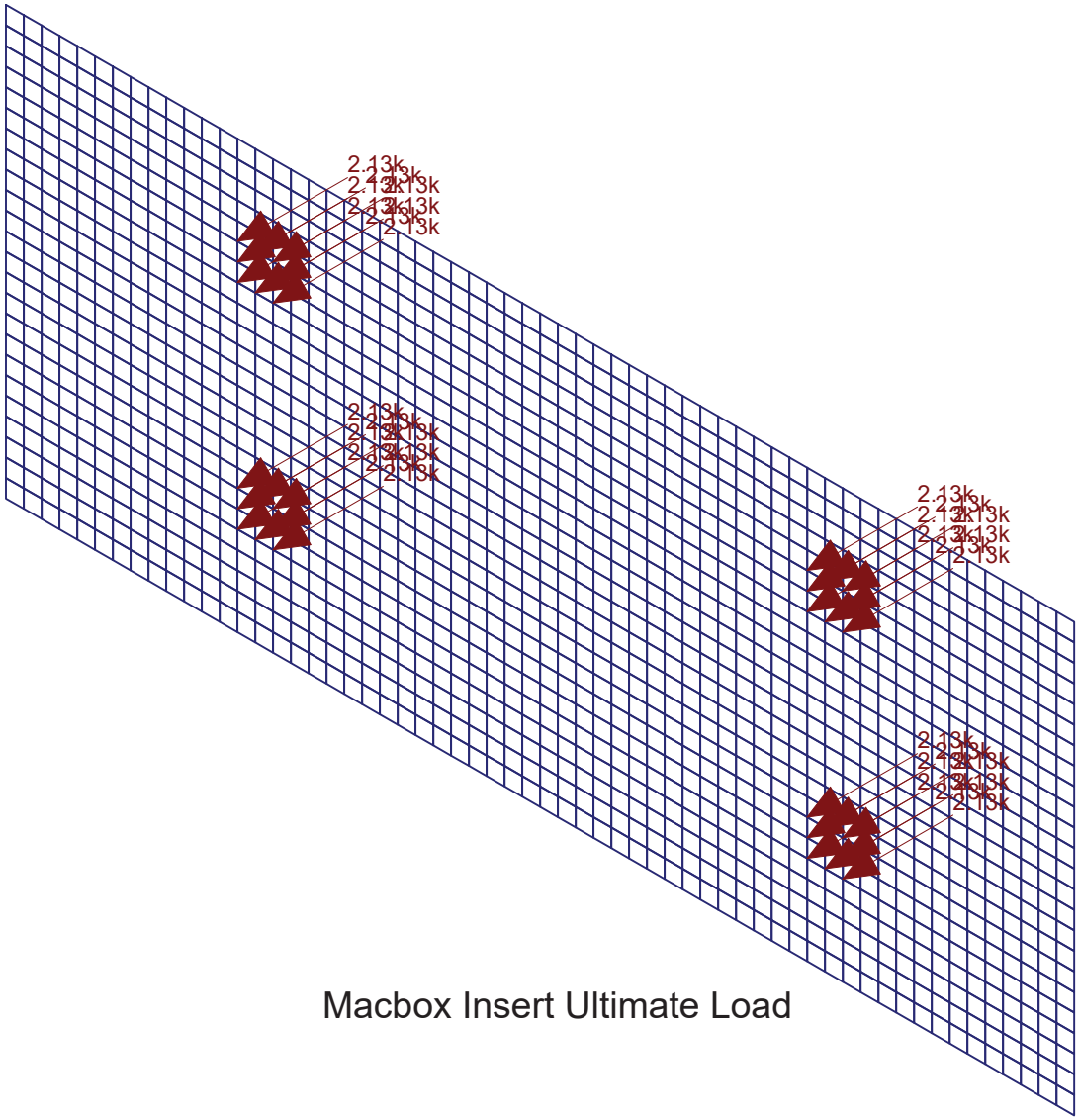
2.13k
2.13k
2.13k

Item 5.

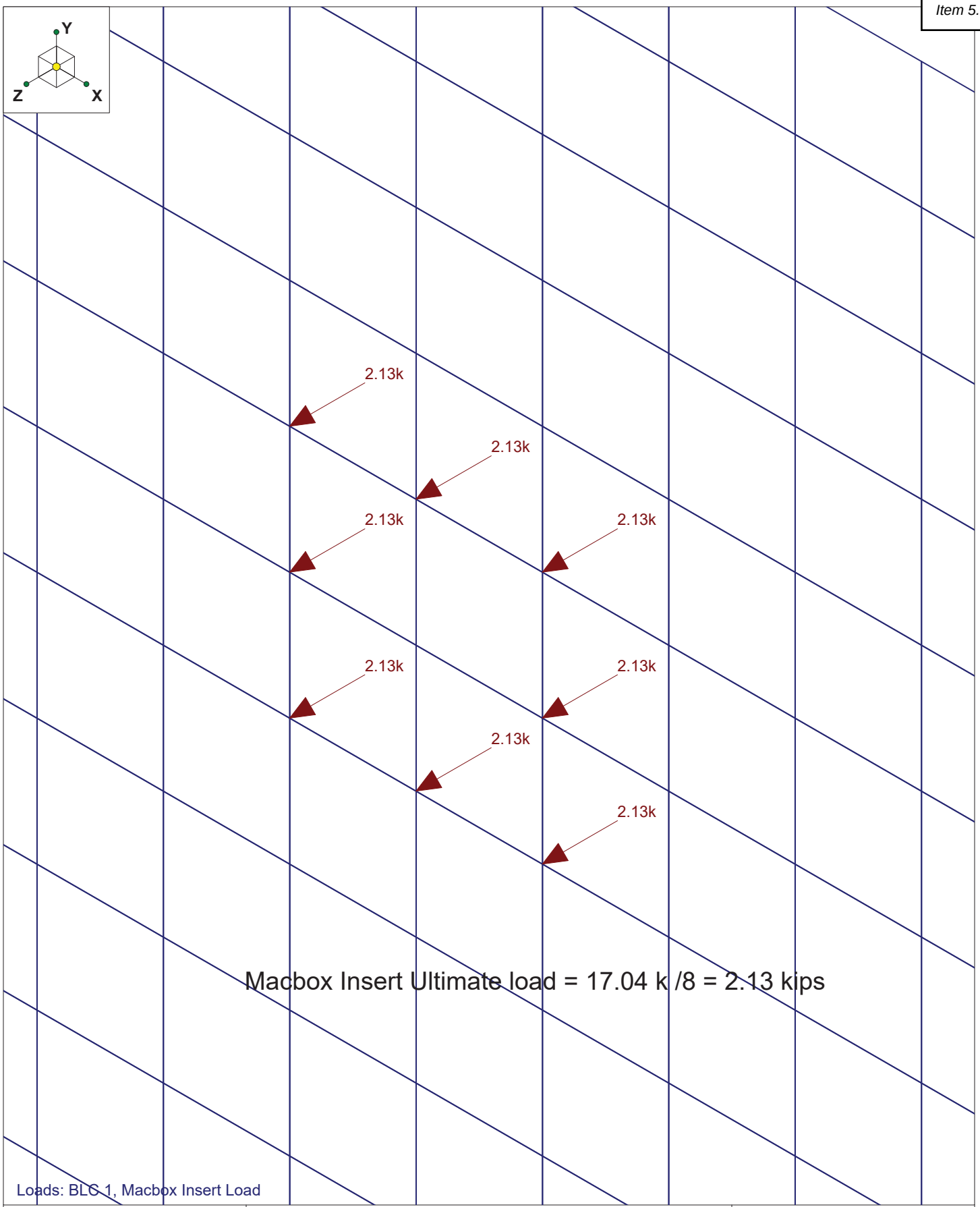

Delta Engineers,Inc	24SF-P and 24SF-HDP	SK - 7
YL		Oct 16, 2020 at 4:00 PM
2020.548.001		24SF-P and 24SF-HDP.r3d

Company : Delta Engineers,Inc
Designer : YL
Job Number : 2020.548.001
Model Name : 24SF-P and 24SF-HDP

Oct 16, 2020
4:24 PM
Checked By:_____

General Material Properties

	Label	E [ksi]	G [ksi]	Nu	Therm (/1E5 F)	Density[k/ft^3]
1	gen_Conc3NW	3155	1372	.15	.6	.145
2	gen_Conc4NW	3644	1584	.15	.6	.145
3	gen_Conc3LW	2085	906	.15	.6	.11
4	gen_Conc4LW	2408	1047	.15	.6	.11
5	gen_Alum	10600	4077	.3	1.29	.173
6	gen_Steel	29000	11154	.3	.65	.49
7	RIGID	1e+6		.3	0	0

Basic Load Cases

	BLC Description	Category	X Gravity	Y Gravity	Z Gravity	Joint	Point	Distribut...	Area(M...	Surface...
1	Macbox Insert Load	None		-1		32				

Joint Loads and Enforced Displacements (BLC 1 : Macbox Insert Load)

	Joint Label	L,D,M	Direction	Magnitude[(k,k-ft), (in,rad), (k*s^2/ft, k*s^2*ft)]
1	N500	L	Z	2.13
2	N501	L	Z	2.13
3	N502	L	Z	2.13
4	N522	L	Z	2.13
5	N523	L	Z	2.13
6	N632	L	Z	2.13
7	N633	L	Z	2.13
8	N634	L	Z	2.13
9	N654A	L	Z	2.13
10	N655A	L	Z	2.13
11	N752A	L	Z	2.13
12	N753A	L	Z	2.13
13	N755A	L	Z	2.13
14	N774A	L	Z	2.13
15	N775A	L	Z	2.13
16	N884	L	Z	2.13
17	N885	L	Z	2.13
18	N887	L	Z	2.13
19	N906	L	Z	2.13
20	N907	L	Z	2.13
21	N1082A	L	Z	2.13
22	N1084	L	Z	2.13
23	N1127	L	Z	2.13
24	N1128	L	Z	2.13
25	N1129	L	Z	2.13
26	N1174	L	Z	2.13
27	N1364	L	Z	2.13
28	N1366	L	Z	2.13
29	N1409	L	Z	2.13
30	N1410	L	Z	2.13
31	N1411	L	Z	2.13
32	N1456	L	Z	2.13

Load Combinations

	Description	S...	P...	S...	B...	Factor	B...	Fa...	B...	Fa...	B...	Fa...	B...	Fa...	B...	Fa...	B...	Fa...	B...	Fa...	B...	Fa...	B...	Fa...	B...	Fa...
1	Ultimate Macbox Insert Load	Y...			1	1																				

Item 5.

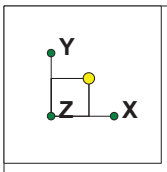

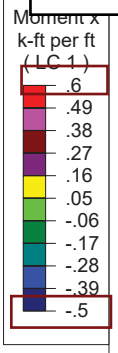

Approximate Cracking Moment = 5*4000^0.5*12*7^2/6/12000=2.58 k-ft/ft, OK

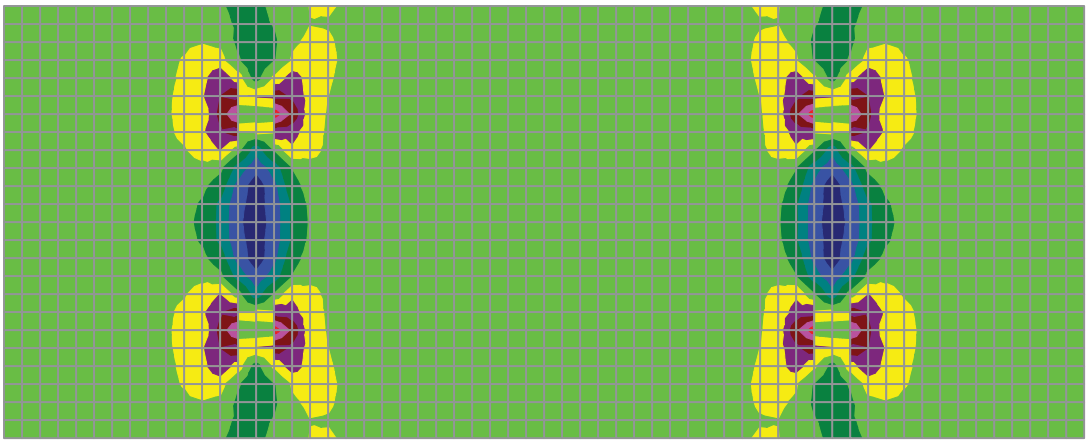

Results for LC 1, Ultimate Macbox Insert Load

Delta Engineers,Inc	24SF-P and 24SF-HDP	SK - 8
YL		Oct 16, 2020 at 4:01 PM
2020.548.001		24SF-P and 24SF-HDP.r3d

Item 5.

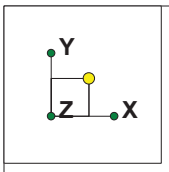

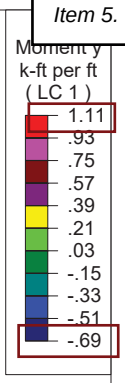

Approximate Cracking Moment = 5*4000^0.5*12*7^2/6/12000=2.58 k-ft/ft, OK

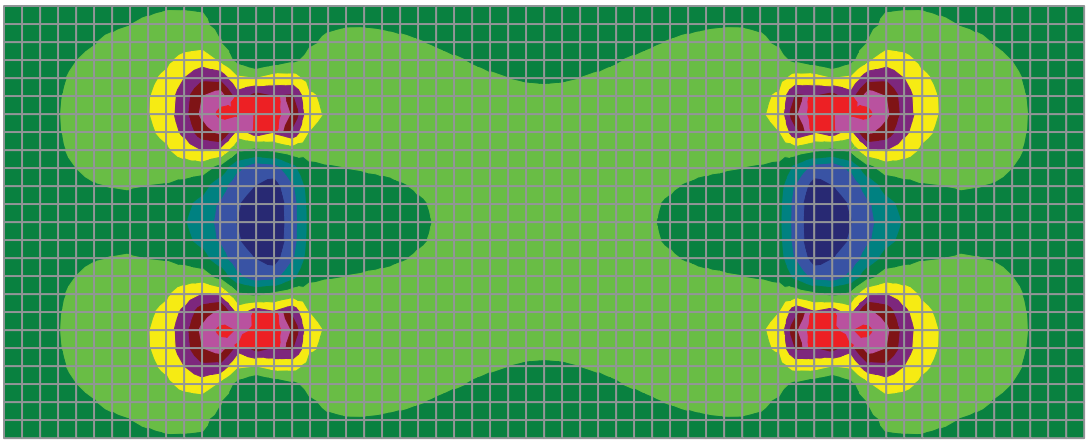

Results for LC 1, Ultimate Macbox Insert Load

Delta Engineers,Inc	24SF-P and 24SF-HDP	SK - 9
YL		Oct 16, 2020 at 4:03 PM
2020.548.001		24SF-P and 24SF-HDP.r3d

Item 5.

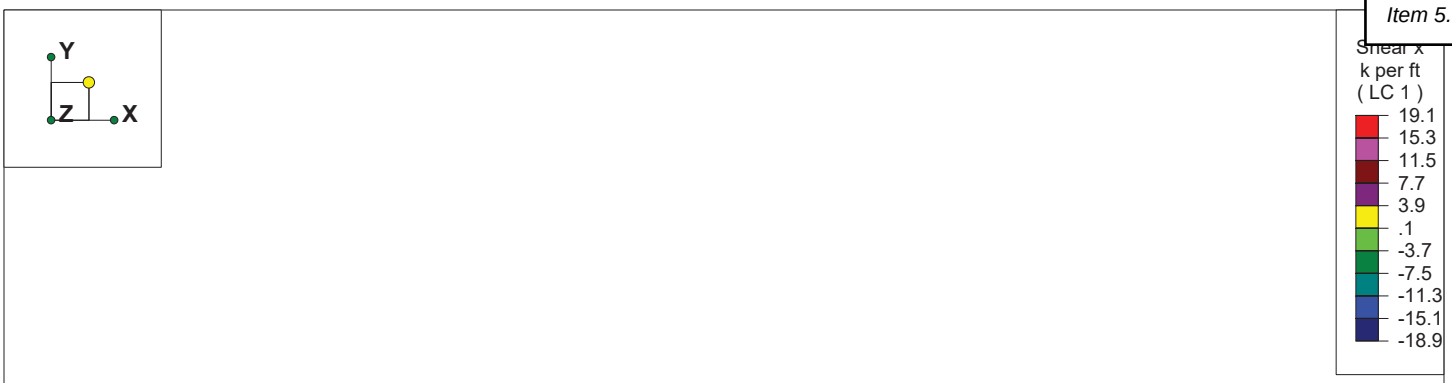

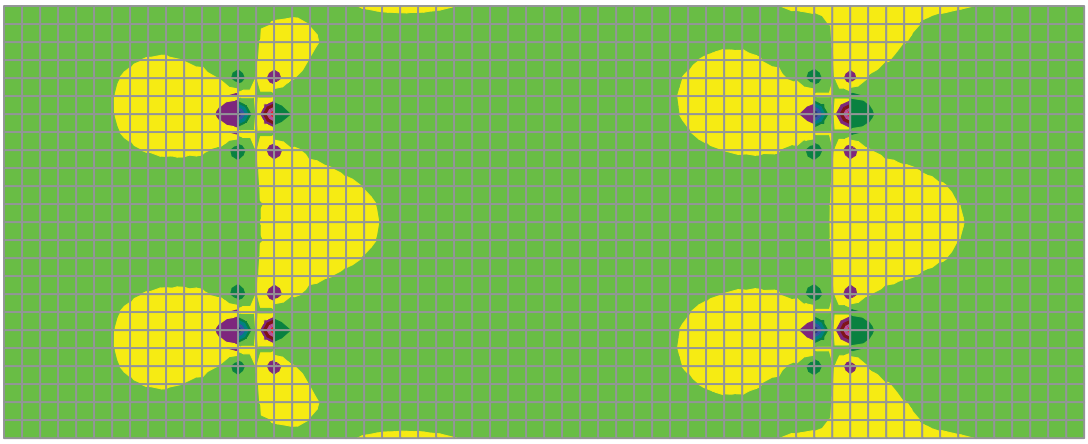

Results for LC 1, Ultimate Macbox Insert Load

Delta Engineers,Inc	24SF-P and 24SF-HDP	SK - 10
YL		Oct 16, 2020 at 4:04 PM
2020.548.001		24SF-P and 24SF-HDP.r3d

Item 5.

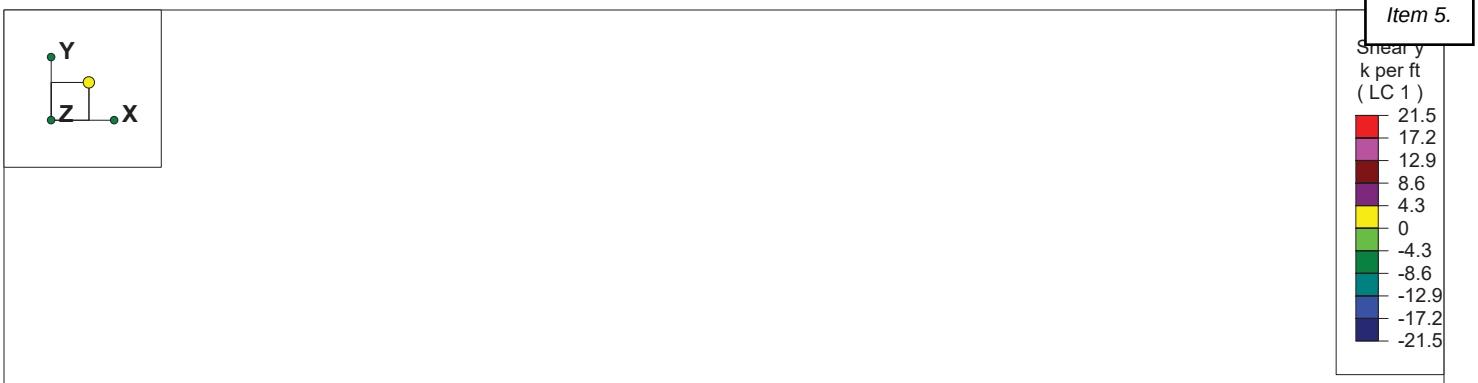

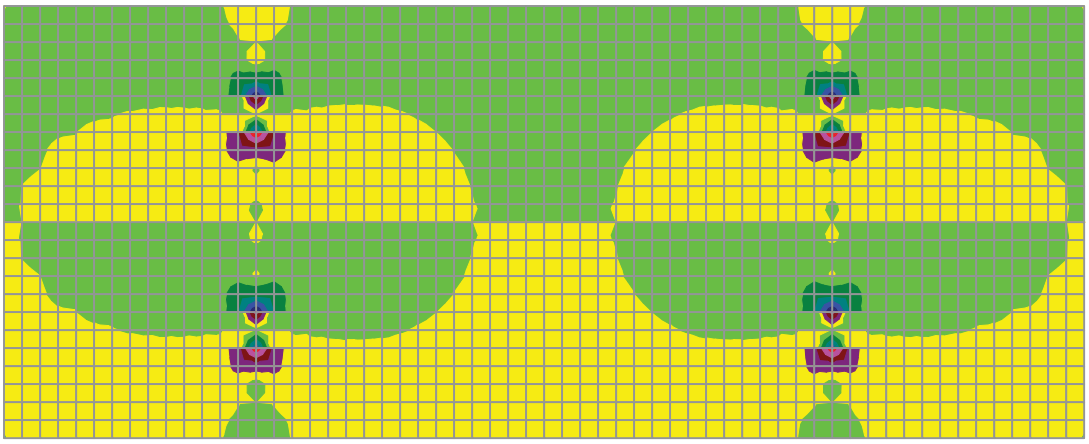

Results for LC 1, Ultimate Macbox Insert Load

Delta Engineers,Inc	24SF-P and 24SF-HDP	SK - 11
YL		Oct 16, 2020 at 4:04 PM
2020.548.001		24SF-P and 24SF-HDP.r3d

Item 5.

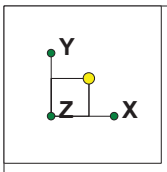

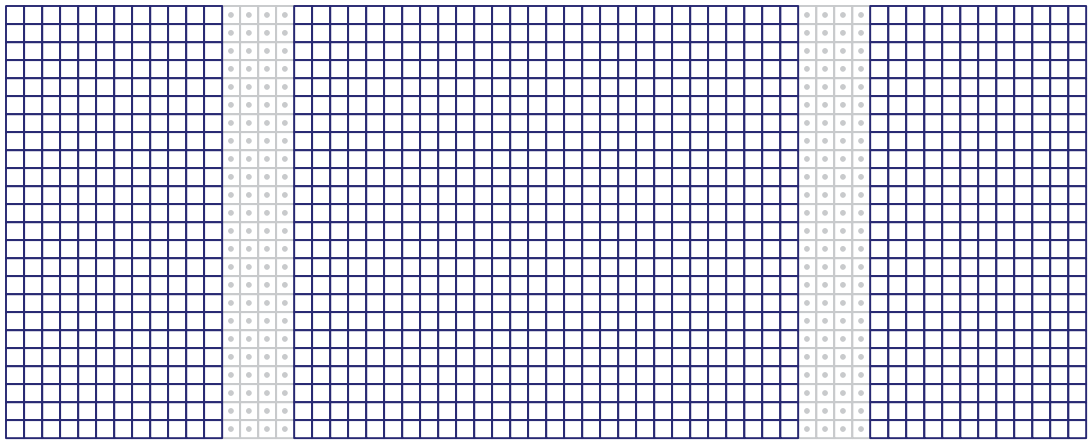

Selected Plates for Shear Results

Company : Delta Engineers,Inc
Designer : YL
Job Number : 2020.548.001
Model Name : 24SF-P and 24SF-HDP

Oct 16, 2020
4:35 PM
Checked By:_____

Plate Forces (per ft) (By Combination) Max. Ultimate Shear X

	LC	Plate Label	Qx[k]	Qy[k]	Mx[k-ft]	My[k-ft]	Mxy[k-ft]	Fx[k]	Fy[k]	Fxy[k]
1	1	P805A	-2.318	.555	.171	1.073	.121	0	-.388	0
2	1	P566A	2.318	.555	.171	1.073	-.121	0	-.388	0
3	1	P421	2.318	-.555	.171	1.073	.121	0	-.116	0
4	1	P660A	-2.318	-.555	.171	1.073	-.121	0	-.117	0
5	1	P547	2.228	-1.229	.167	1.039	.193	0	-.37	0
6	1	P786	-2.228	-1.229	.167	1.039	-.193	0	-.369	0
7	1	P440	2.228	1.229	.167	1.039	-.193	0	-.135	0
8	1	P679B	-2.228	1.229	.167	1.039	.193	0	-.135	0
9	1	P1006	1.547	-.384	.163	.338	.051	0	-.067	0
10	1	P1340	1.547	.384	.163	.338	-.051	0	-.225	0
11	1	P1300A	-1.547	.384	.163	.338	.051	-.01	-.224	0
12	1	P966	-1.547	-.384	.163	.338	-.051	0	-.067	0
13	1	P1052	1.469	.852	.147	.322	-.047	0	-.077	0
14	1	P1254	-1.469	-.852	.147	.322	-.047	-.009	-.214	0
15	1	P1294	1.469	-.852	.147	.322	.047	0	-.214	0
16	1	P1012A	-1.469	.852	.147	.322	.047	0	-.077	0
17	1	P568A	1.312	1.611	.181	.631	-.218	0	-.371	0
18	1	P807	-1.312	1.611	.181	.631	.218	0	-.371	0
19	1	P419	1.312	-1.611	.181	.631	.218	0	-.088	0
20	1	P658B	-1.312	-1.611	.181	.631	-.218	0	-.088	0

Approximate Plain Conc. Shear Capacity = 0.6*4/3*4000^0.5*12*7 = 4.25 kips, OK

Plate Forces (per ft) (By Combination)

Max. Ultimate Shear Y

	LC	Plate Label	Qx[k]	Qy[k]	Mx[k-ft]	My[k-ft]	Mxy[k-ft]	Fx[k]	Fy[k]	Fxy[k]
1	1	P526	-.229	-2.224	.059	.171	.249	0	-.293	0
2	1	P765	.229	-2.224	.059	.171	-.249	0	-.292	0
3	1	P700B	.229	2.224	.059	.171	.249	0	-.157	0
4	1	P461	-.229	2.224	.059	.171	-.249	0	-.157	0
5	1	P545	1.08	-2.19	.148	.541	.272	0	-.318	0
6	1	P442	1.08	2.19	.148	.541	-.272	0	-.141	0
7	1	P784A	-1.08	-2.19	.148	.541	-.272	0	-.317	0
8	1	P681A	-1.08	2.19	.148	.541	.272	0	-.141	0
9	1	P826A	-.126	1.71	.134	.325	.192	0	-.383	0
10	1	P587A	.126	1.71	.134	.325	-.192	0	-.383	0
11	1	P400	.126	-1.71	.134	.325	.192	0	-.067	0
12	1	P639A	-.126	-1.71	.134	.325	-.192	0	-.068	0
13	1	P568A	1.312	1.611	.181	.631	-.218	0	-.371	0
14	1	P807	-1.312	1.611	.181	.631	.218	0	-.371	0
15	1	P658B	-1.312	-1.611	.181	.631	-.218	0	-.088	0
16	1	P419	1.312	-1.611	.181	.631	.218	0	-.088	0
17	1	P763A	1.05	-1.475	-.022	-.08	-.164	0	-.27	0
18	1	P463	-1.05	1.475	-.022	-.08	-.164	0	-.175	0
19	1	P702A	1.05	1.475	-.022	-.08	.164	0	-.175	0
20	1	P524	-1.05	-1.475	-.022	-.08	.164	0	-.271	0

Approximate Plain Conc. Shear Capacity = 0.6*4/3*4000^0.5*12*7 = 4.25 kips, OK

Checked By:SLV

Item 5.

DELTA
SPECIALTY PRECAST CONCRETE ENGINEERS
860 Hooper Road, Endwell, NY 13760
www.delta-eas.com
Phone: (607) 231-6600
Fax: (607) 231-6650

JOB	2020.548.001		
DESCRIPTION	Macbox Insert Connection		
SHEET NO.		OF	SCALE
CALCULATED BY	YL	DATE	10/18/2020
CHECKED BY		DATE	

6SF-P and 6SF-HDP Units Risa Analysis

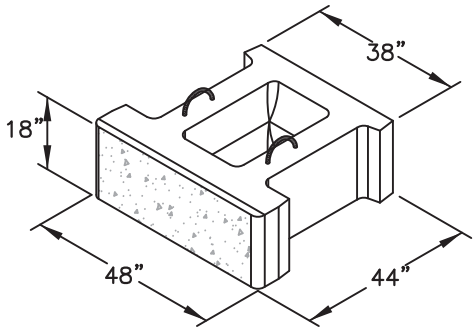

STONE STRONG 6SF UNIT

NOT TO SCALE

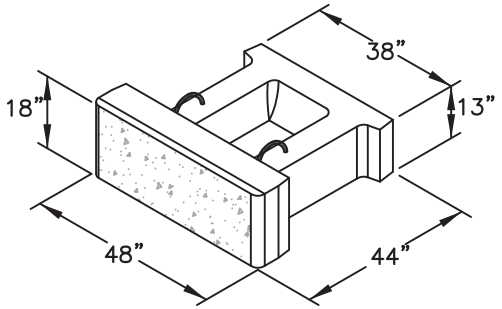

STONE STRONG 6SF TOP UNIT

NOT TO SCALE

DISCLAIMER:

These typical details are preliminary and conceptual in nature. They are provided for general information purposes only. Anyone making use of these details and related information does so at their own risk and assumes all liability for such use. Site specific design should be performed by a licensed Professional Engineer based on actual site conditions, materials, and local practices.

Stone Strong LLC retains al common law, statutory, and other reserved rights to these drawings including the copyright. Limited license is granted to copy, reproduce, or modify the details to prepare construction drawings for Stone Strong retaining walls. Stone Strong LLC makes no warranties, either expressed or implied, of merchantability or fitness for any particular purpose, and accepts no responsibility for the accuracy, suitability, or completeness of information contained herein.

STONE STRONG SYSTEMS®

www.stonestrong.com

PROJECT

COMPONENTS
STONE STRONG SYSTEMS

DATE: 2/10/16 | FILE: 14_Block.6sf

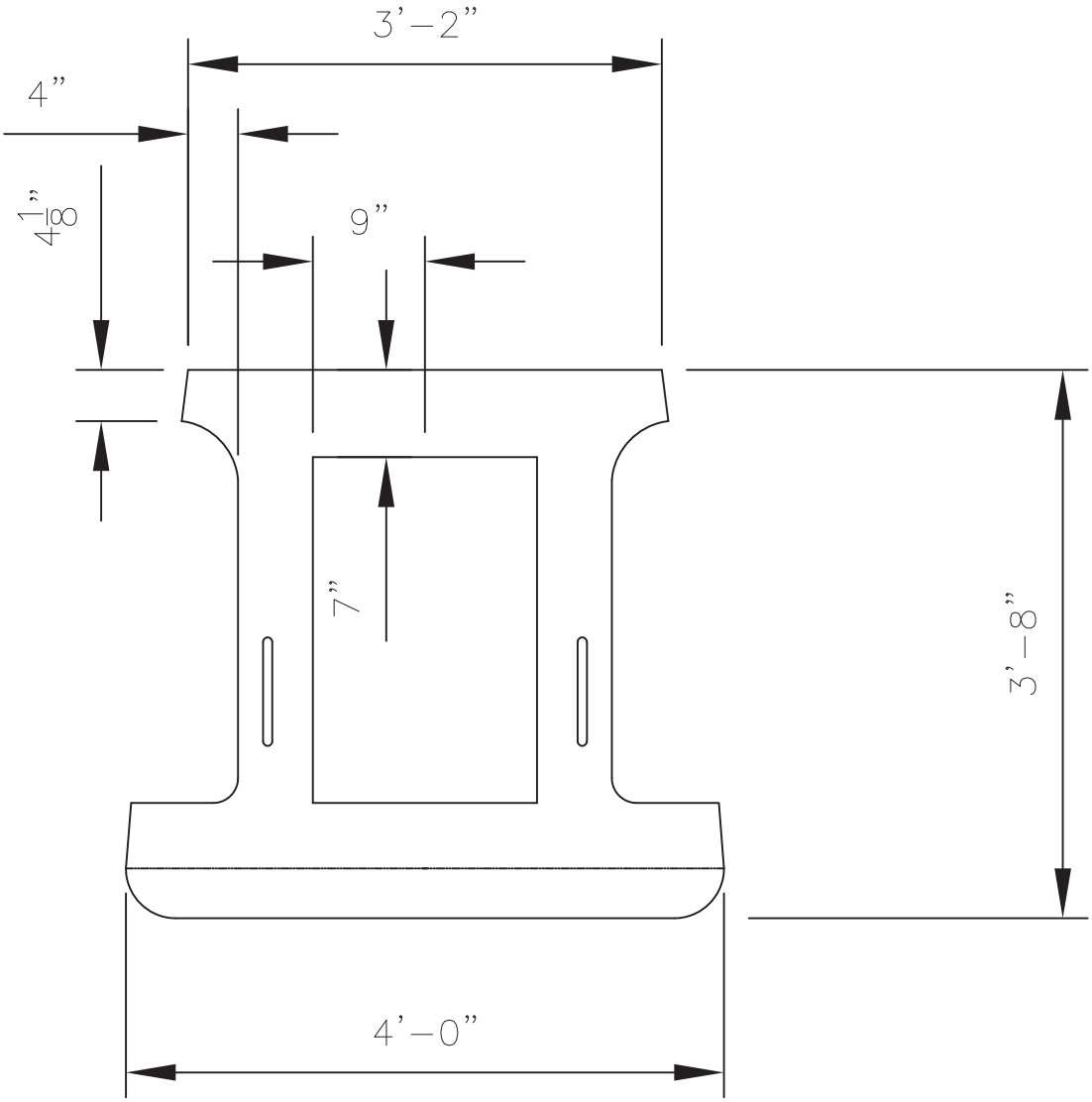

6SF UNIT
PLAN VIEW

Checked By:SLV

Item 5.

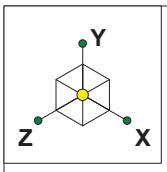

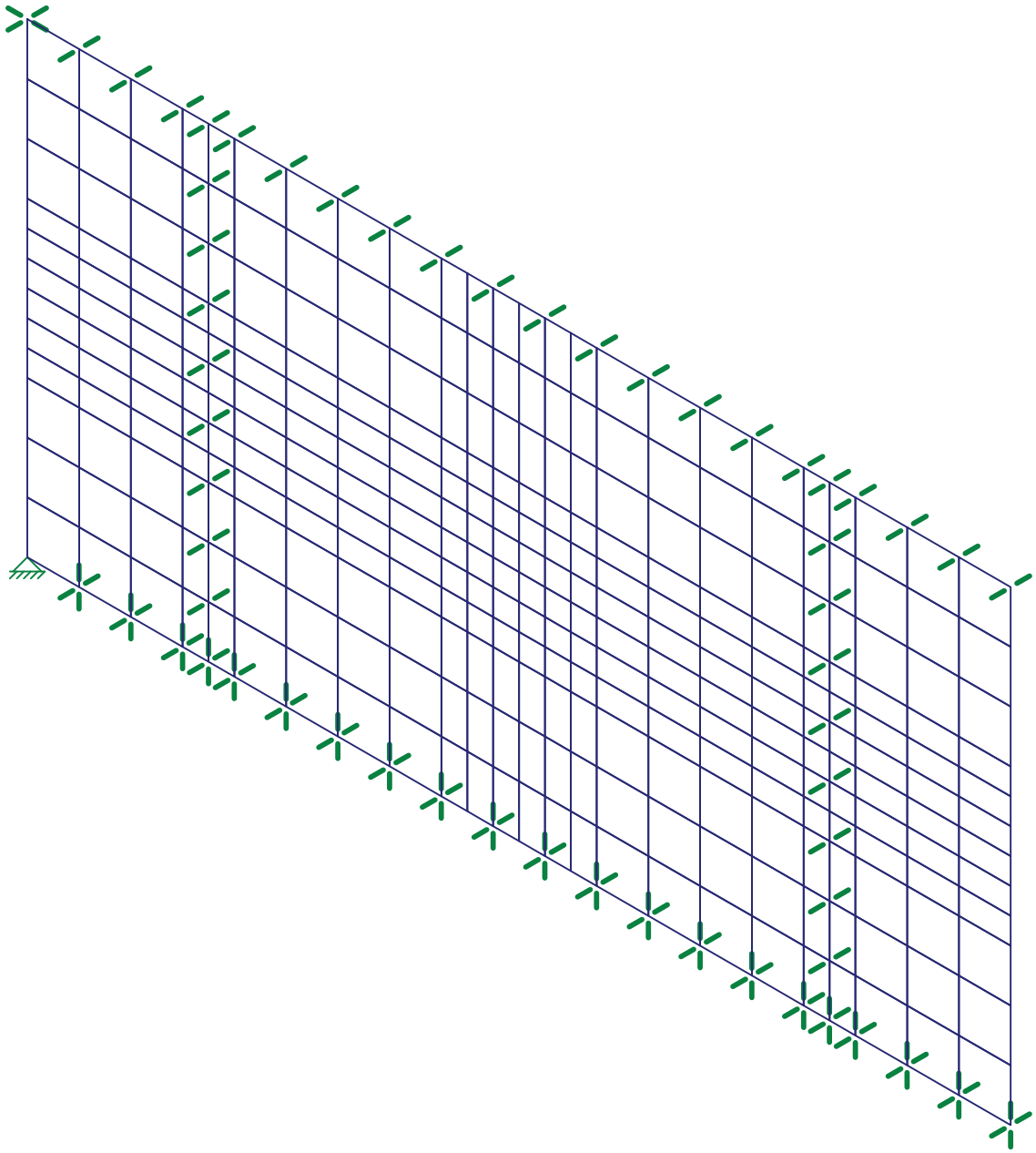

Delta Engineers,Inc	6SF-P and 6SF-HDP	SK - 1
YL		Oct 18, 2020 at 7:29 PM
2020.548.001		6SF-P and 6SF-HDP.r3d

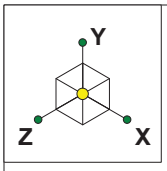

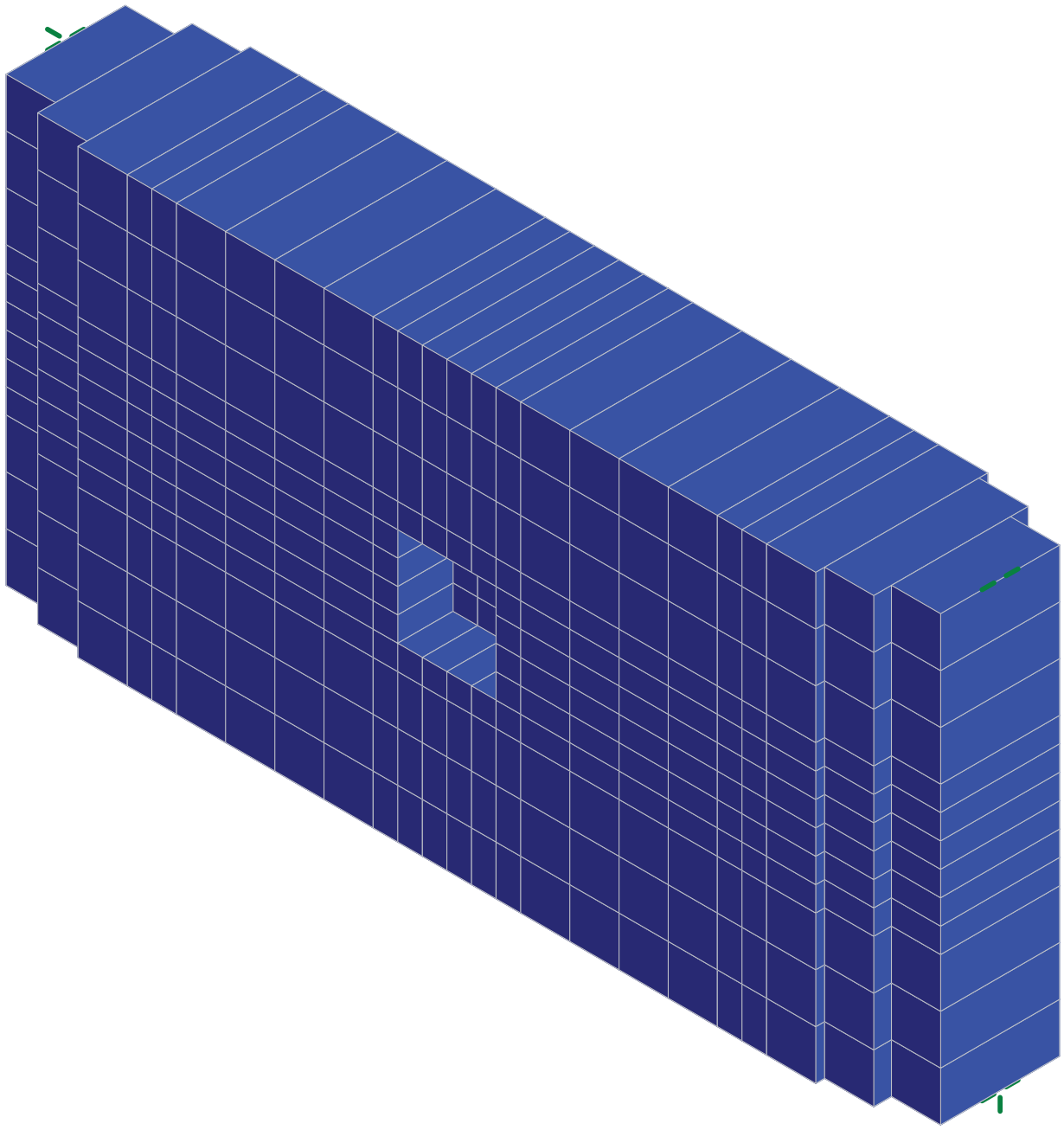

Delta Engineers,Inc	6SF-P and 6SF-HDP	SK - 2
YL		Oct 18, 2020 at 7:29 PM
2020.548.001		6SF-P and 6SF-HDP.r3d

Checked By:SLV

Item 5.

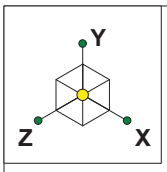

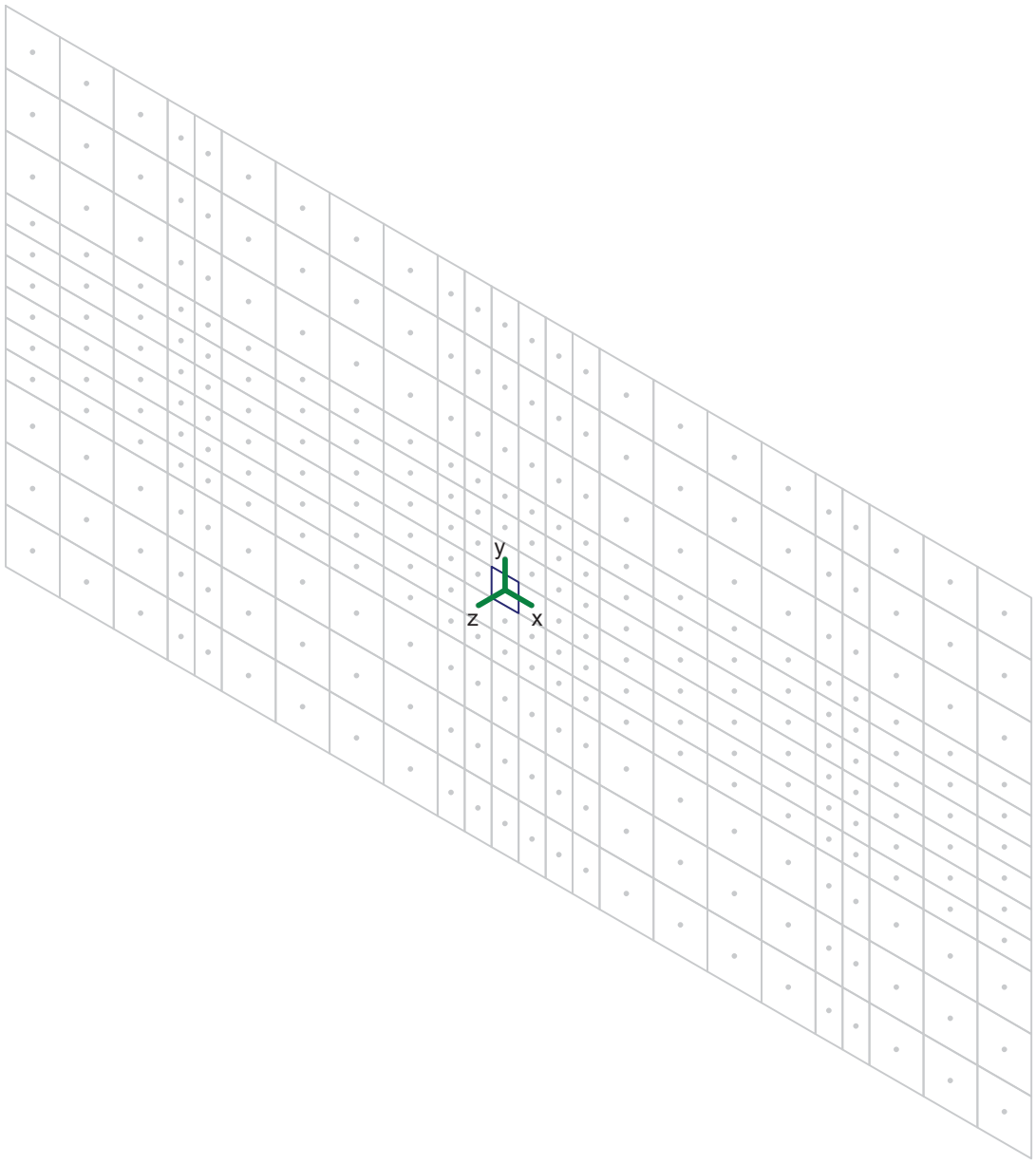

Delta Engineers,Inc	6SF-P and 6SF-HDP	SK - 3
YL		Oct 18, 2020 at 7:30 PM
2020.548.001		6SF-P and 6SF-HDP.r3d

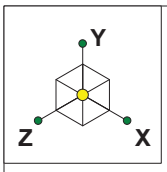

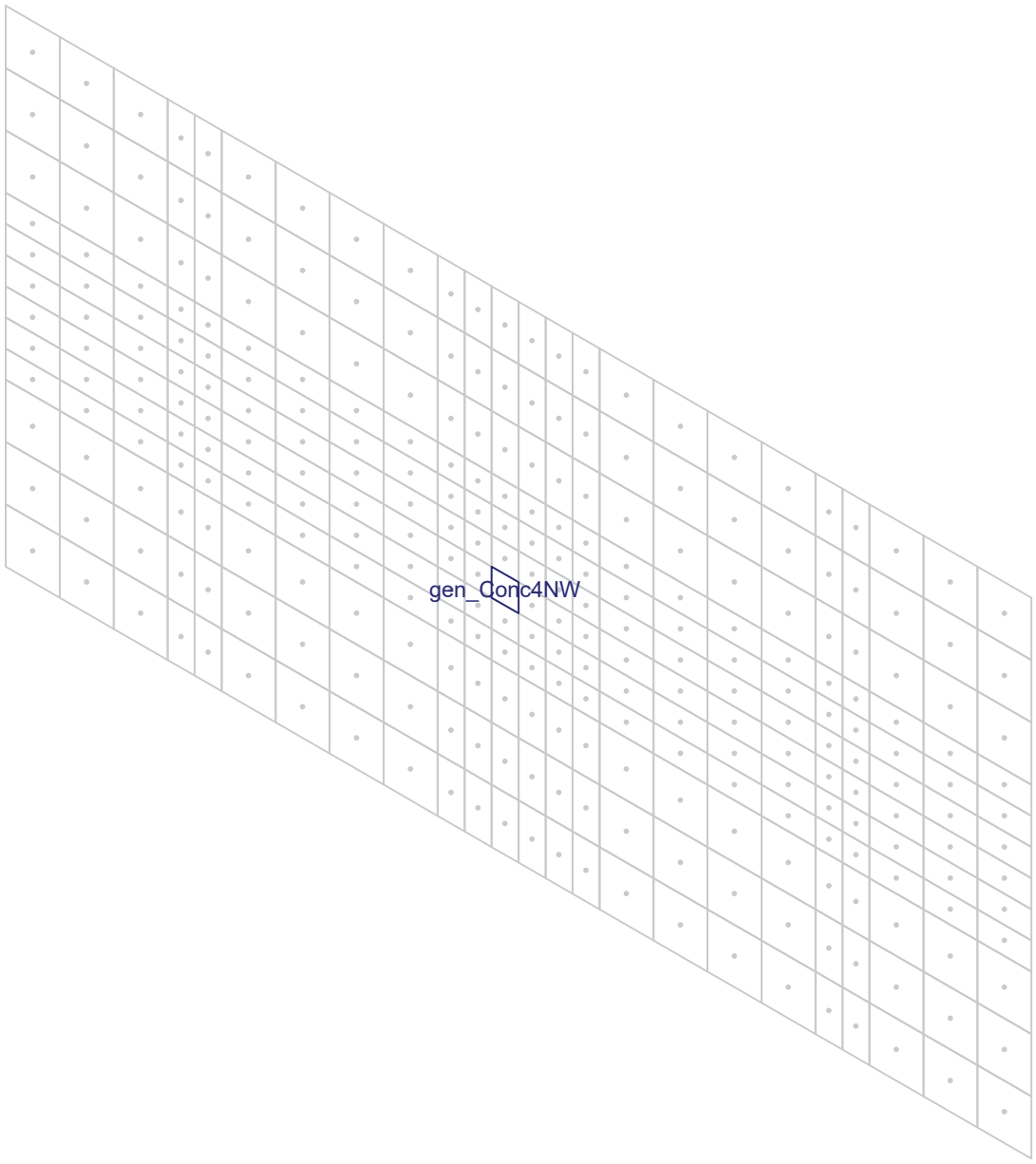

Delta Engineers,Inc	6SF-P and 6SF-HDP	SK - 4
YL		Oct 18, 2020 at 7:31 PM
2020.548.001		6SF-P and 6SF-HDP.r3d

Item 5.

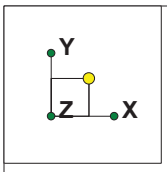

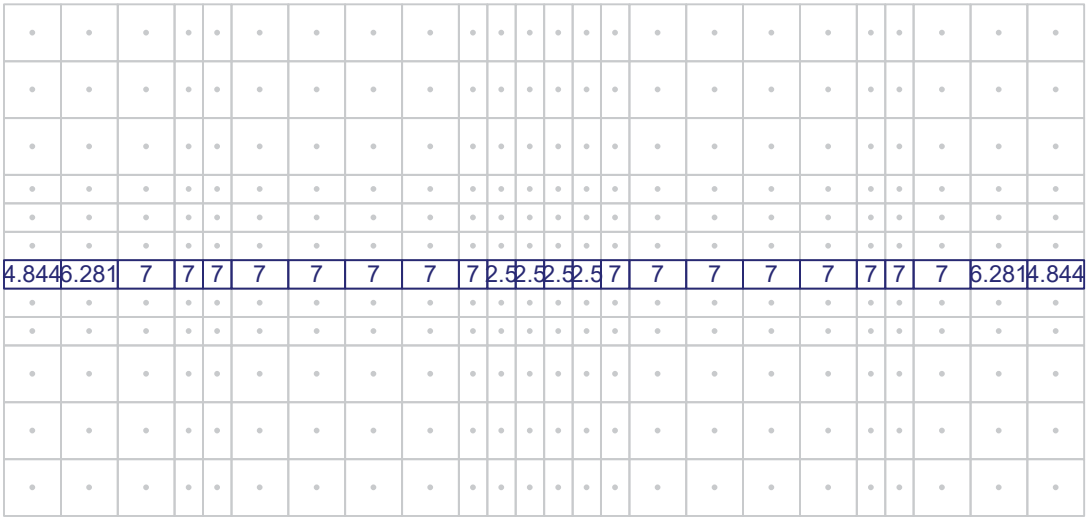

Delta Engineers,Inc	6SF-P and 6SF-HDP	SK - 5
YL		Oct 18, 2020 at 7:34 PM
2020.548.001		6SF-P and 6SF-HDP.r3d

Checked By:SLV

Item 5.

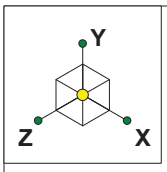

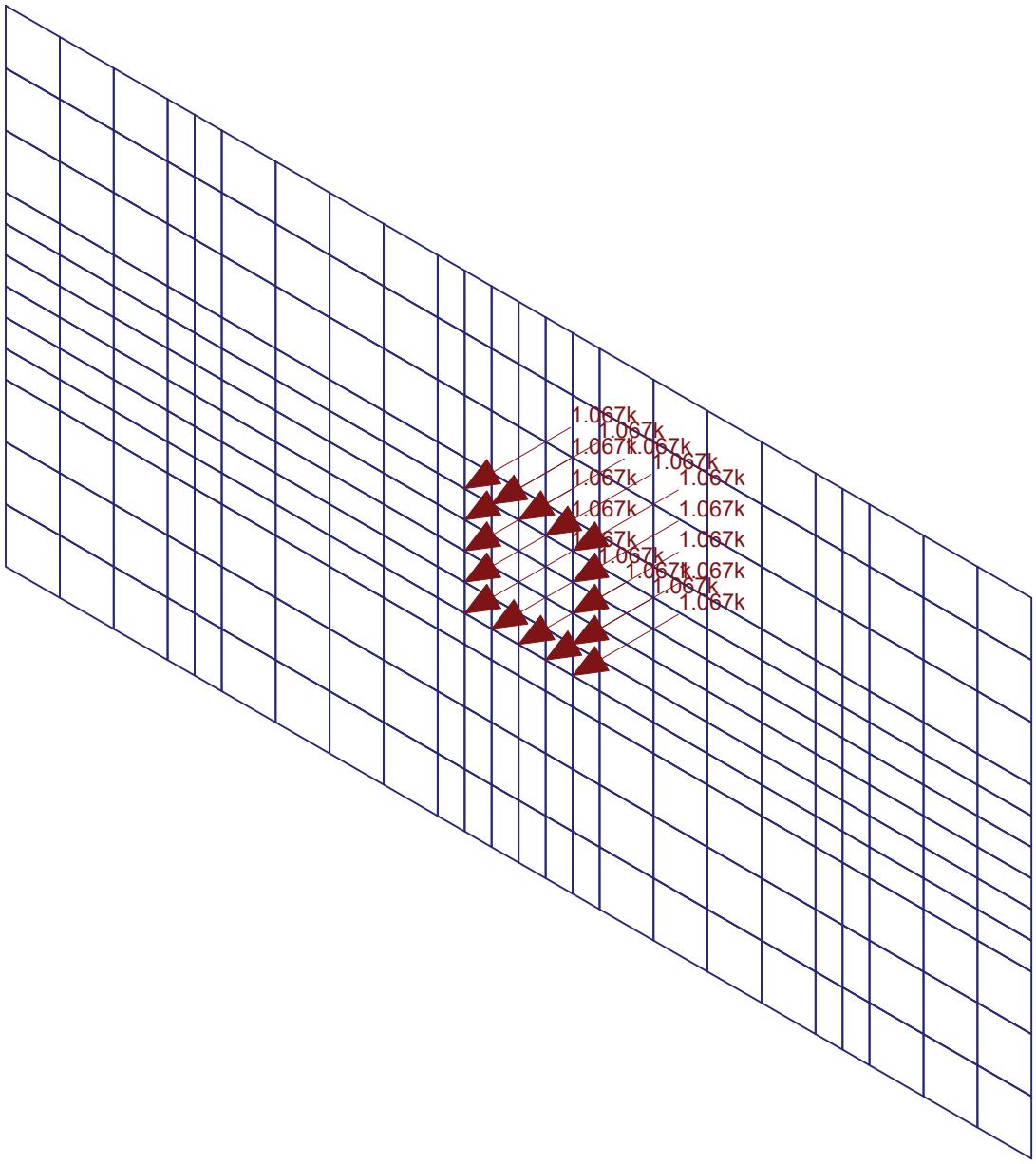

Loads: BLC 1, Macbox Insert Load

Delta Engineers,Inc	6SF-P and 6SF-HDP	SK - 6
YL		Oct 18, 2020 at 7:35 PM
2020.548.001		6SF-P and 6SF-HDP.r3d

General Material Properties

	Label	E [ksi]	G [ksi]	Nu	Therm (/1E5 F)	Density[k/ft^3]
1	gen_Conc3NW	3155	1372	.15	.6	.145
2	gen_Conc4NW	3644	1584	.15	.6	.145
3	gen_Conc3LW	2085	906	.15	.6	.11
4	gen_Conc4LW	2408	1047	.15	.6	.11
5	gen_Alum	10600	4077	.3	1.29	.173
6	gen_Steel	29000	11154	.3	.65	.49
7	RIGID	1e+6		.3	0	0

Basic Load Cases

	BLC Description	Category	X Gravity	Y Gravity	Z Gravity	Joint	Point	Distribut...	Area(M...	Surface...
1	Macbox Insert Load	None		-1		16				

Joint Loads and Enforced Displacements (BLC 1 : Macbox Insert Load)

	Joint Label	L,D,M	Direction	Magnitude[(k,k-ft), (in,rad), (k*s^2/ft, k*s^2*ft)]
1	N252	L	Z	1.067
2	N253	L	Z	1.067
3	N272	L	Z	1.067
4	N273	L	Z	1.067
5	N298	L	Z	1.067
6	N299	L	Z	1.067
7	N316	L	Z	1.067
8	N317	L	Z	1.067
9	N318	L	Z	1.067
10	N319	L	Z	1.067
11	N320	L	Z	1.067
12	N321	L	Z	1.067
13	N322	L	Z	1.067
14	N323	L	Z	1.067
15	N324	L	Z	1.067
16	N325	L	Z	1.067

Load Combinations

	Description	S...	P...	S...	B...	Factor	B...	Fa...	B...	Fa...	B...	Fa...	B...	Fa...	B...	Fa...	B...	Fa...	B...	Fa...	B...	Fa...	B...	Fa...	B...	Fa...
1	Macbox Insert Ultimate Load	Y...			1	1																				

Item 5.

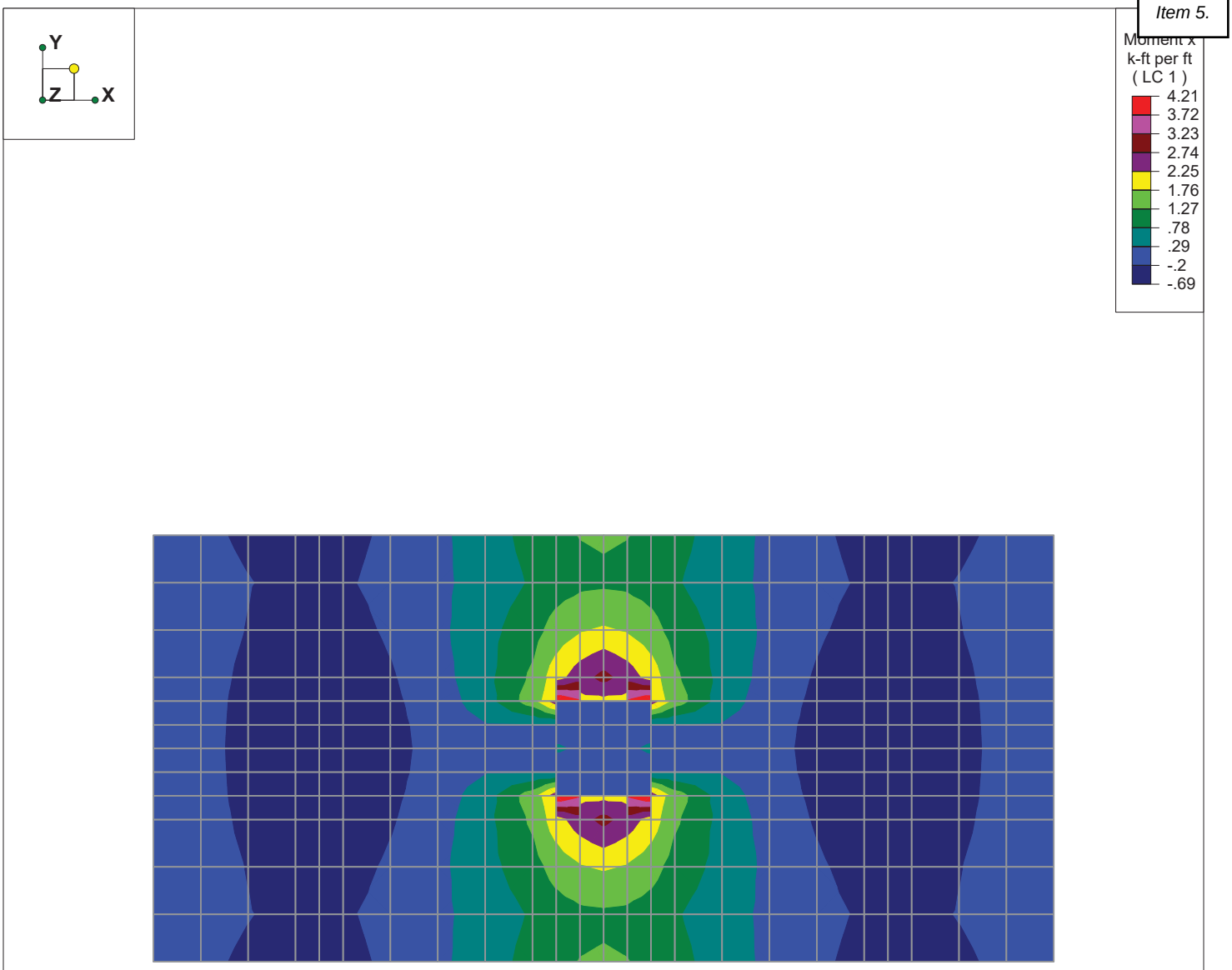

Results for LC 1, Macbox Insert Ultimate Load

Delta Engineers,Inc	6SF-P and 6SF-HDP	SK - 7
YL		Oct 18, 2020 at 7:36 PM
2020.548.001		6SF-P and 6SF-HDP.r3d

Item 5.

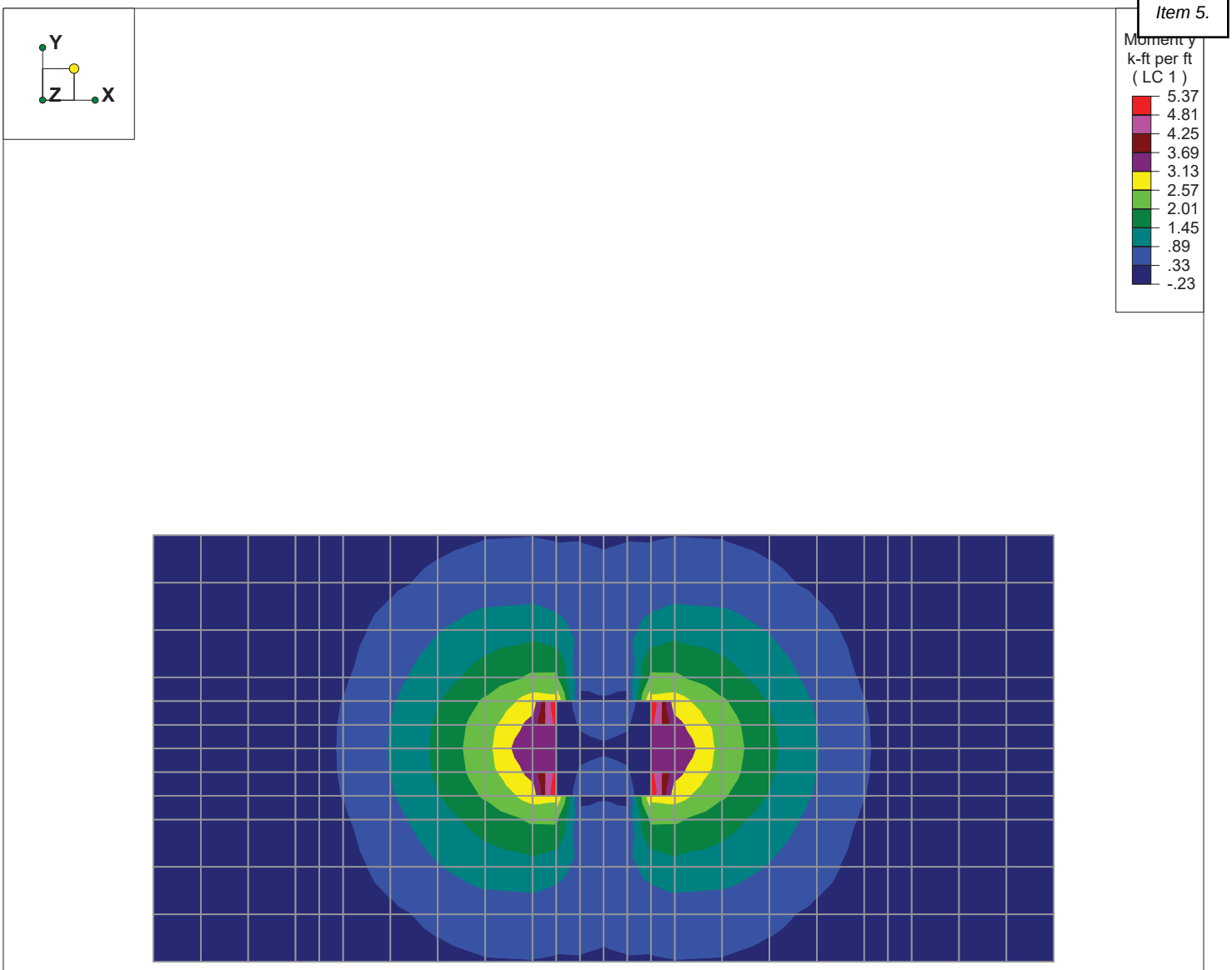

Results for LC 1, Macbox Insert Ultimate Load

Delta Engineers,Inc	6SF-P and 6SF-HDP	SK - 8
YL		Oct 18, 2020 at 7:36 PM
2020.548.001		6SF-P and 6SF-HDP.r3d

Item 5.

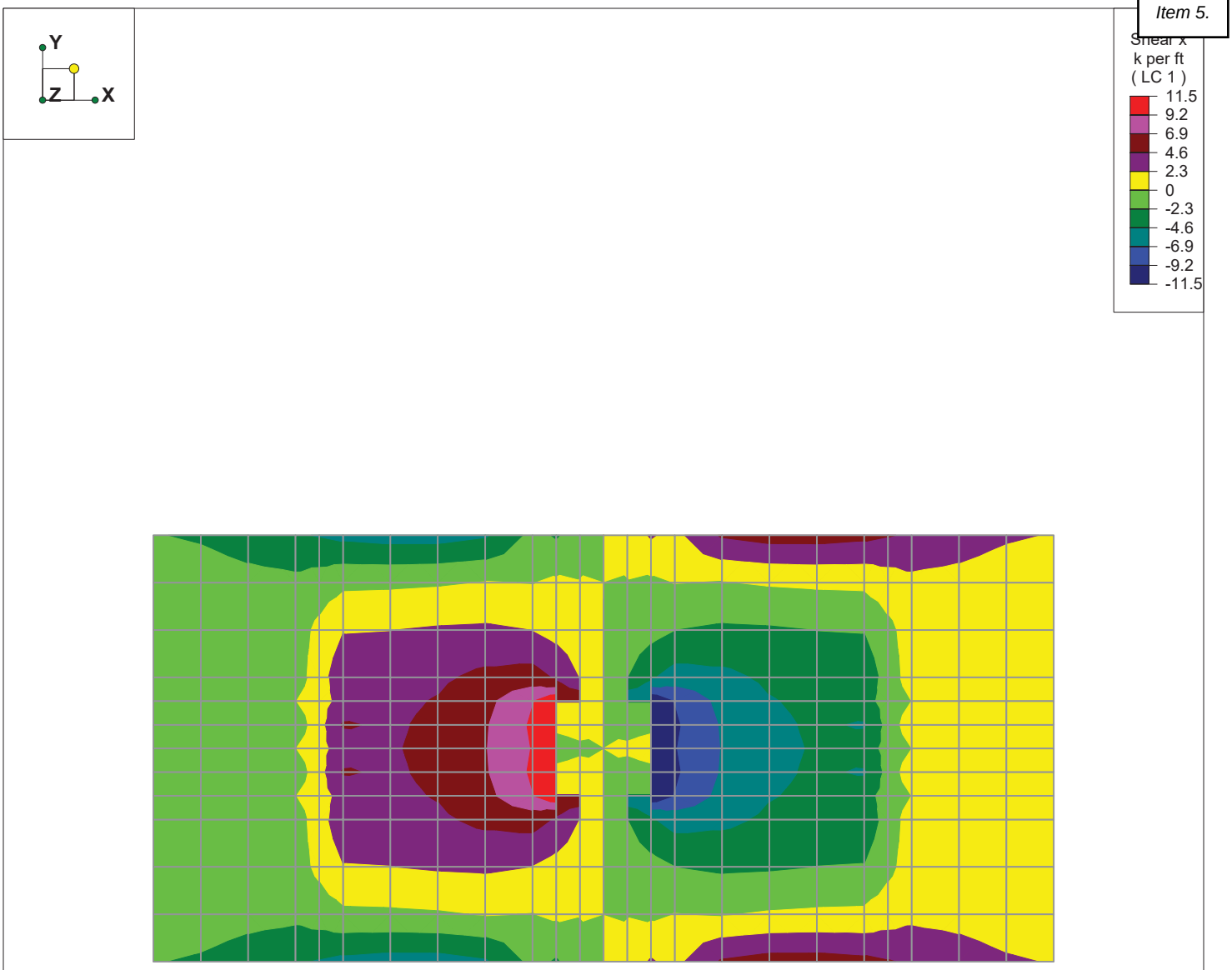

Results for LC 1, Macbox Insert Ultimate Load

Delta Engineers,Inc	6SF-P and 6SF-HDP	SK - 9
YL		Oct 18, 2020 at 7:37 PM
2020.548.001		6SF-P and 6SF-HDP.r3d

Item 5.

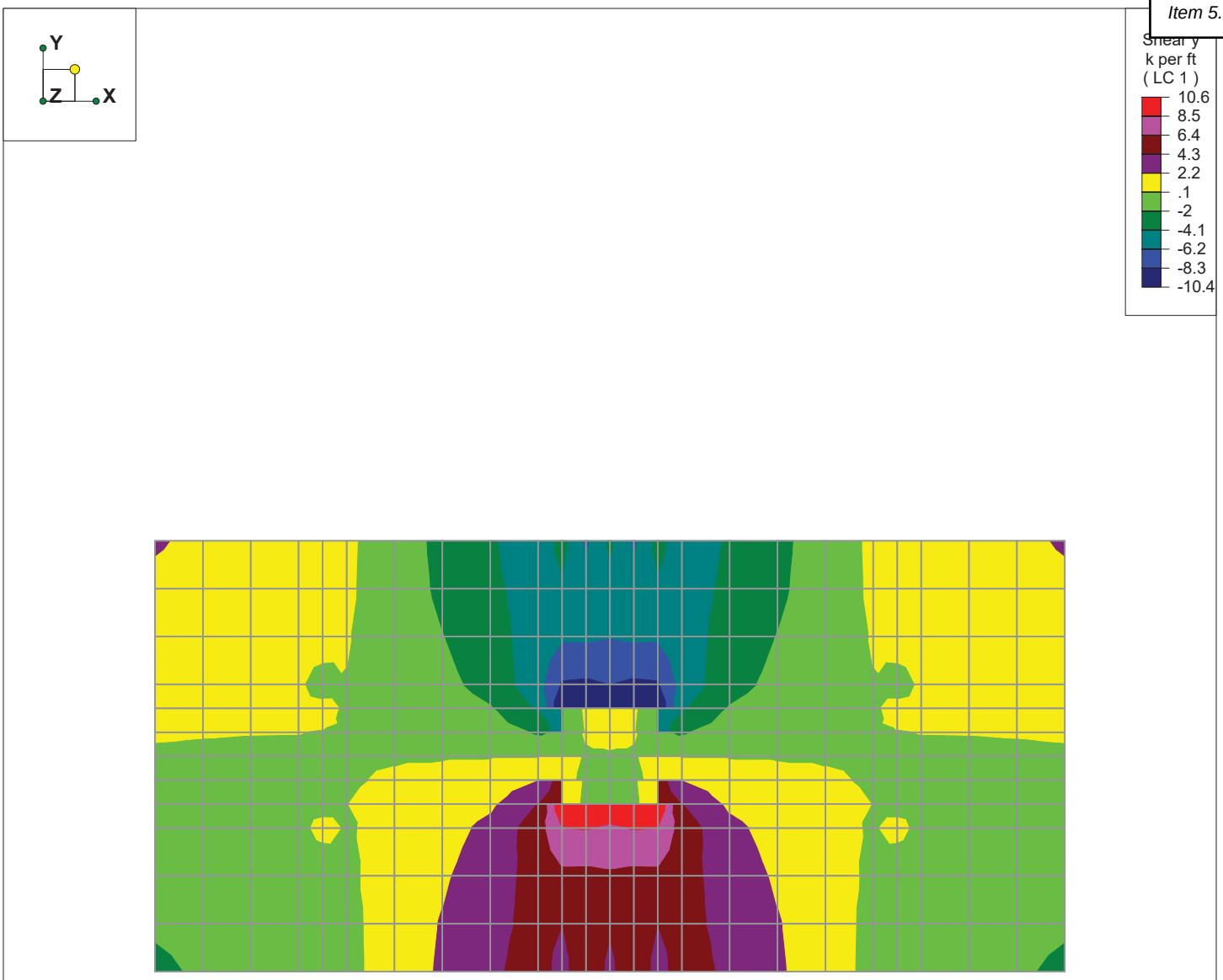

Results for LC 1, Macbox Insert Ultimate Load

Delta Engineers,Inc	6SF-P and 6SF-HDP	SK - 10
YL		Oct 18, 2020 at 7:37 PM
2020.548.001		6SF-P and 6SF-HDP.r3d

Plate Forces (per ft) (By Combination) Max. Ultimate Mx

	LC	Plate Label	Qx[k]	Qy[k]	Mx[k-ft]	My[k-ft]	Mxy[k-ft]	Fx[k]	Fy[k]	Fxy[k]
1	1	P283A	-5.08	-10.291	3.141	1.608	-1.573	0	-.039	0
2	1	P282	5.08	-10.291	3.141	1.608	1.573	0	-.039	0
3	1	P287	5.08	10.291	3.141	1.608	-1.573	0	-.062	.009
4	1	P288A	-5.08	10.291	3.141	1.608	1.573	0	-.062	-.01
5	1	P262	-1.505	-10.017	2.494	.292	-.287	0	-.032	0
6	1	P261A	1.505	-10.017	2.494	.292	.287	0	-.032	0
7	1	P265	-1.505	10.017	2.494	.292	.287	0	-.051	0
8	1	P264A	1.505	10.017	2.494	.292	-.287	0	-.051	0
9	1	P255A	.801	-6.889	2.373	.644	.421	0	-.027	0
10	1	P256	-.801	-6.889	2.373	.644	-.421	0	-.027	0
11	1	P256A	.801	6.889	2.373	.644	-.421	0	-.069	0
12	1	P257	-.801	6.889	2.373	.644	.421	0	-.069	0
13	1	P286A	8.132	7.821	1.961	2.65	-1.247	0	-.079	0
14	1	P281A	8.132	-7.821	1.961	2.65	1.247	0	-.05	0
15	1	P284	-8.132	-7.821	1.961	2.65	-1.247	0	-.05	0
16	1	P289	-8.132	7.821	1.961	2.65	1.247	0	-.08	0
17	1	P270	2.159	-6.821	1.943	1.125	.966	0	-.031	0
18	1	P272	2.159	6.821	1.943	1.125	-.966	0	-.076	0
19	1	P270A	-2.159	-6.821	1.943	1.125	-.966	0	-.031	0
20	1	P272A	-2.159	6.821	1.943	1.125	.966	0	-.076	0

Item 5.

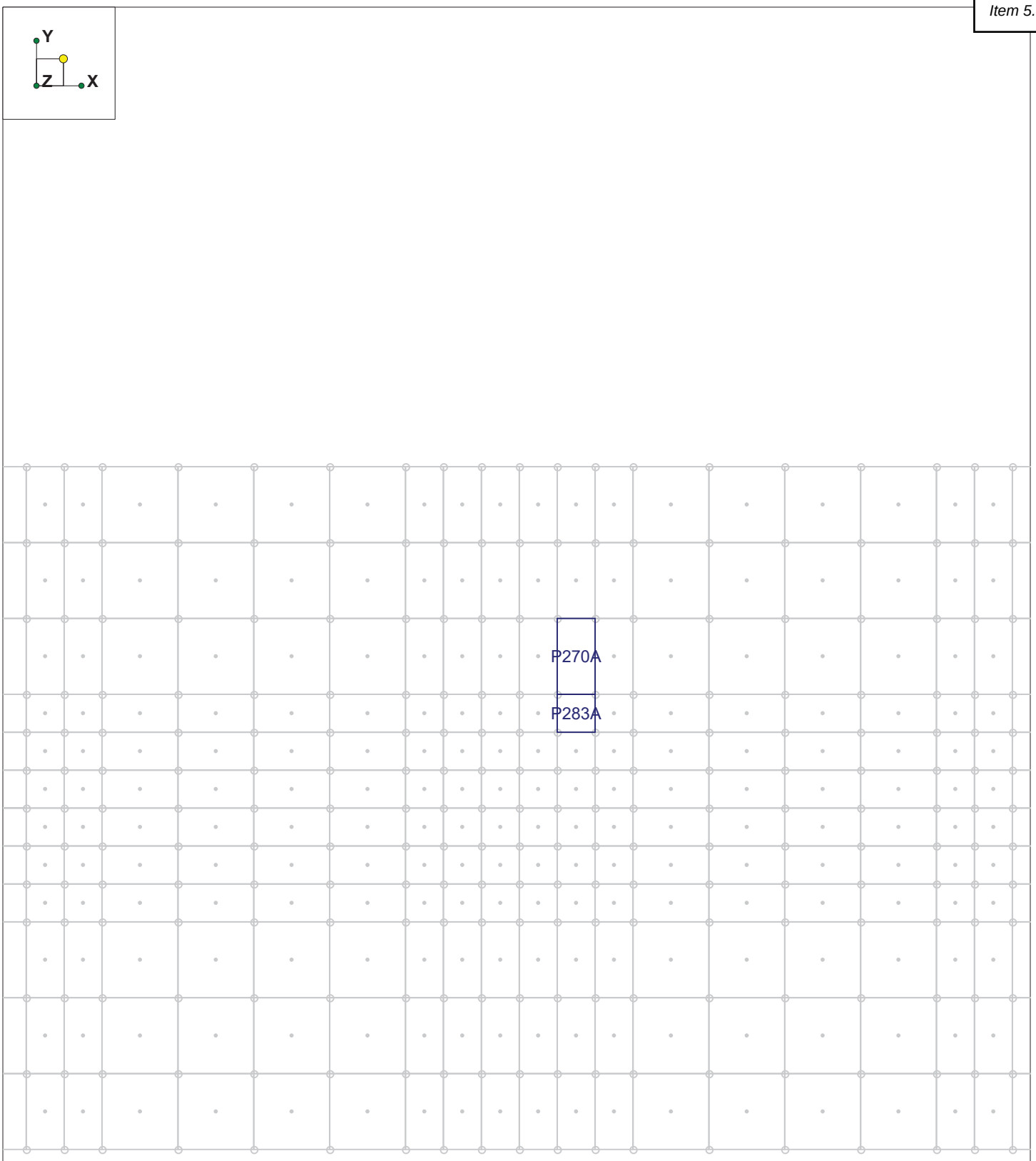

Selected Plates for Max. Average Ultimate Mx

Delta Engineers,Inc	6SF-P and 6SF-HDP	SK - 11
YL		Oct 18, 2020 at 8:05 PM
2020.548.001		6SF-P and 6SF-HDP.r3d

Plate Forces (per ft) (By Combination) Selected Plates for Max. Average Ultimate Mx

	LC	Plate Label	Qx[k]	Qy[k]	Mx[k-ft]	My[k-ft]	Mxy[k-ft]	Fx[k]	Fy[k]	Fxy[k]
1	1	P283A	-5.08	-10.291	3.141	1.608	-1.573	0	-.039	0
2	1	P270A	-2.159	-6.821	1.943	1.125	-.966	0	-.031	0

Max. Average Ultimate Mx = 2.54 k-ft/ft
Approximate Cracking Moment = 5*4000^0.5*12*7^2/6/12000=2.58 k-ft/ft, OK

Item 5.

Company : Delta Engineers,Inc
Designer : YL
Job Number : 2020.548.001
Model Name : 6SF-P and 6SF-HDP

Oct 18, 2020
8:14 PM
Checked By:_____

Plate Forces (per ft) (By Combination) Max. Ultimate My

	LC	Plate Label	Qx[k]	Qy[k]	Mx[k-ft]	My[k-ft]	Mxy[k-ft]	Fx[k]	Fy[k]	Fxy[k]
1	1	P282A	11.085	-4.571	1.276	4.124	1.494	0	-.07	0
2	1	P285	-11.085	-4.571	1.276	4.124	-1.494	0	-.07	0
3	1	P285A	11.085	4.571	1.276	4.124	-1.494	0	-.091	0
4	1	P288	-11.085	4.571	1.276	4.124	1.494	0	-.091	0
5	1	P277A	10.951	-1.35	.155	3.506	.292	0	-.078	0
6	1	P278A	10.951	1.35	.155	3.506	-.292	0	-.085	0
7	1	P280	-10.951	-1.35	.155	3.506	-.292	0	-.078	0
8	1	P281	-10.951	1.35	.155	3.506	.292	0	-.085	0
9	1	P196A	7.872	-.775	.281	3.071	.383	0	-.068	0
10	1	P197	7.872	.775	.281	3.071	-.383	0	-.074	0
11	1	P200A	-7.872	-.775	.281	3.071	-.383	0	-.068	0
12	1	P201	-7.872	.775	.281	3.071	.383	0	-.075	0
13	1	P284	-8.132	-7.821	1.961	2.65	-1.247	0	-.05	0
14	1	P281A	8.132	-7.821	1.961	2.65	1.247	0	-.05	0
15	1	P289	-8.132	7.821	1.961	2.65	1.247	0	-.08	0
16	1	P286A	8.132	7.821	1.961	2.65	-1.247	0	-.079	0
17	1	P218	7.548	-2.404	.655	2.638	.869	0	-.06	0
18	1	P234A	7.548	2.404	.655	2.638	-.869	0	-.079	0
19	1	P222	-7.548	-2.404	.655	2.638	-.869	0	-.06	0
20	1	P238A	-7.548	2.404	.655	2.638	.869	0	-.079	0

Item 5.

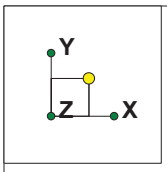

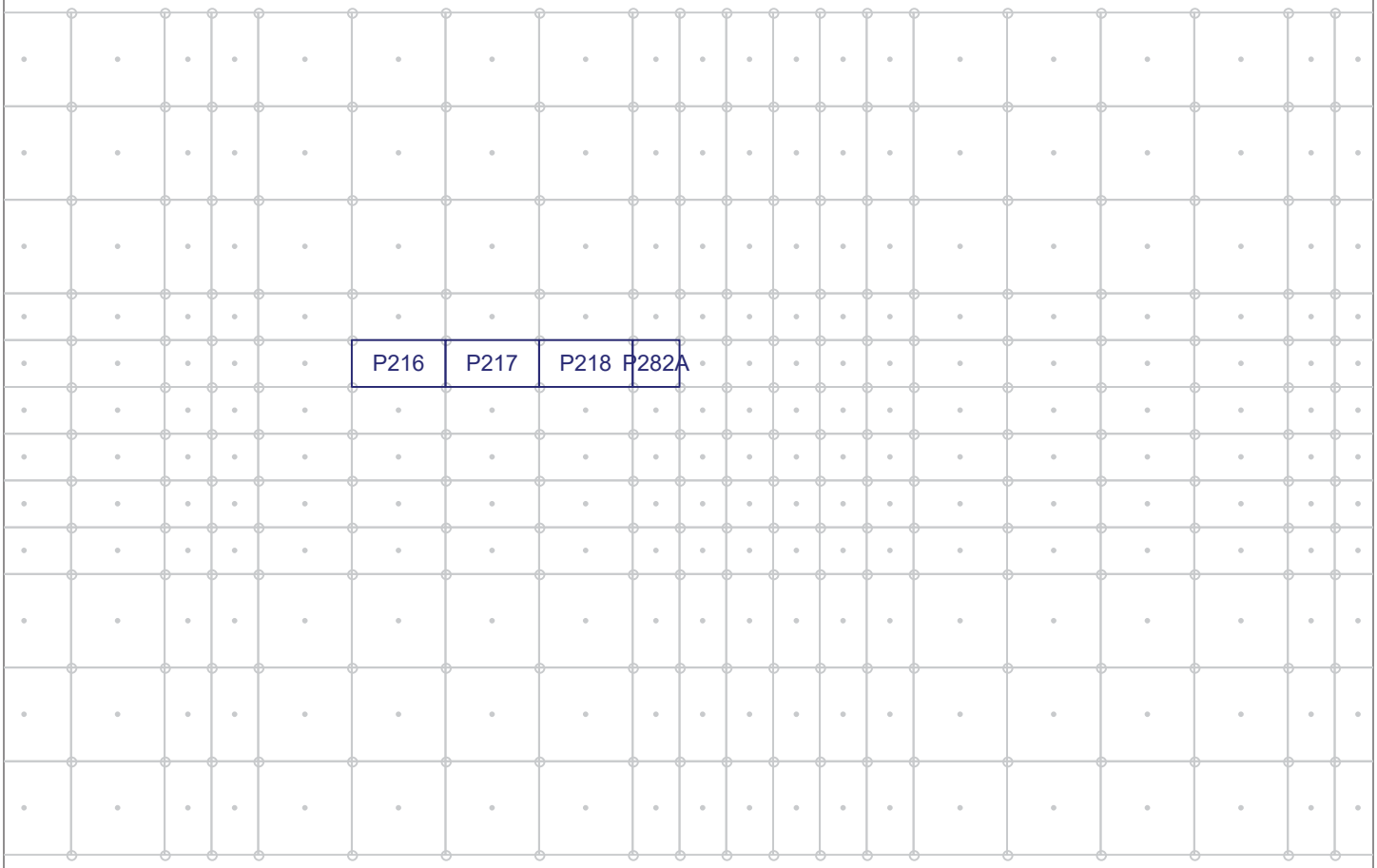

Selected Plates for Max. Average Ultimate My

Delta Engineers,Inc	6SF-P and 6SF-HDP	SK - 12
YL		Oct 18, 2020 at 8:20 PM
2020.548.001		6SF-P and 6SF-HDP.r3d

Plate Forces (per ft) (By Combination)

Selected Plates for Max. Average Ultimate Mx

	LC	Plate Label	Qx[k]	Qy[k]	Mx[k-ft]	My[k-ft]	Mxy[k-ft]	Fx[k]	Fy[k]	Fxy[k]
1	1	P282A	11.085	-4.571	1.276	4.124	1.494	0	-.07	0
2	1	P218	7.548	-2.404	.655	2.638	.869	0	-.06	0
3	1	P217	5.41	-1.097	.16	1.861	.486	0	-.056	0
4	1	P216	4.411	-.532	-.151	1.183	.359	0	-.054	0

Max. Average Ultimate My = 2.45 k-ft/ft
Approximate Cracking Moment = 5*4000^0.5*12*7^2/6/12000=2.58 k-ft/ft, OK

DELTA
SPECIALTY PRECAST CONCRETE ENGINEERS
860 Hooper Road, Endwell, NY 13760
www.delta-eas.com
Phone: (607) 231-6600
Fax: (607) 231-6650

Item 5.

JOB	2020.548.001			
DESCRIPTION	Macbox Insert Connection			
SHEET NO.		OF	SCALE	
CALCULATED BY	YL		DATE	10/18/2020
CHECKED BY			DATE	

6-28-P and 6-28-HDP Units Risa Analysis

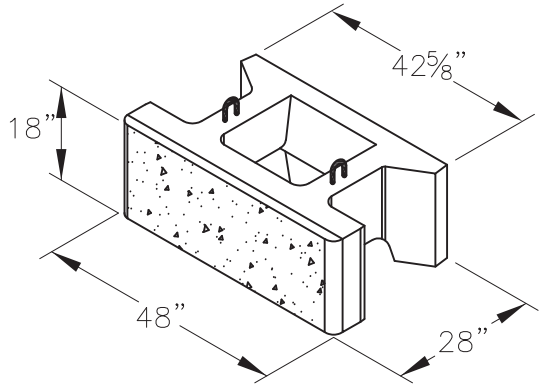

STONE STRONG 6–28 UNIT

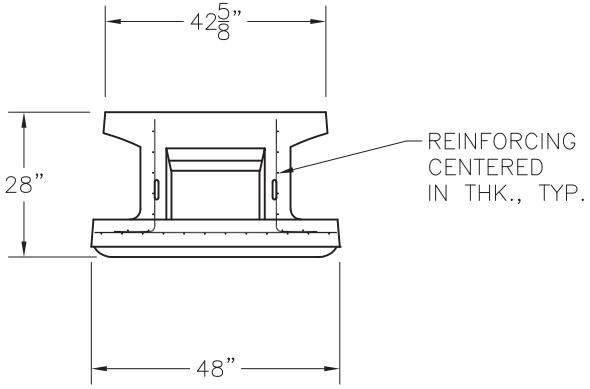

6–28 UNIT
PLAN VIEW

DISCLAIMER: These typical details are preliminary and conceptual in nature. They are provided for general information purposes only. Anyone making use of these details and related information does so at their own risk and assumes all liability for such use. Site specific design should be performed by a licensed Professional Engineer based on actual site conditions, materials, and local practices. Stone Strong LLC retains al common law, statutory, and other reserved rights to these drawings including the copyright. Limited license is granted to copy, reproduce, or modify the details to prepare construction drawings for Stone Strong retaining walls. Stone Strong LLC makes no warranties, either expressed or implied, of merchantability or fitness for any particular purpose, and accepts no responsibility for the accuracy, suitability, or completeness of information contained herein.

REV.NO.	DATE	REVISION

PREPARED FOR: STONE STRONG SYSTEMS® www.stonestrong.com

PREPARED BY:
DELTA
SPECIALTY PRECAST CONCRETE ENGINEERS
860 HOOPER ROAD, ENDWELL, NY 13760–1564
TEL: (607) 231–6600 FAX: (607) 231–6650

DATE: 11/22/17 | SHEET TITLE: BLOCK GEOMETRY | DRWN BY: YL
SCALE: N.T.S. | CKD BY:
PROJECT: STONE STRONG 6–28 UNITS
CONTRACTOR: | DWG. I.D.
DELTA PROJ. NO.: 2017.478.001 | SHT. NO.

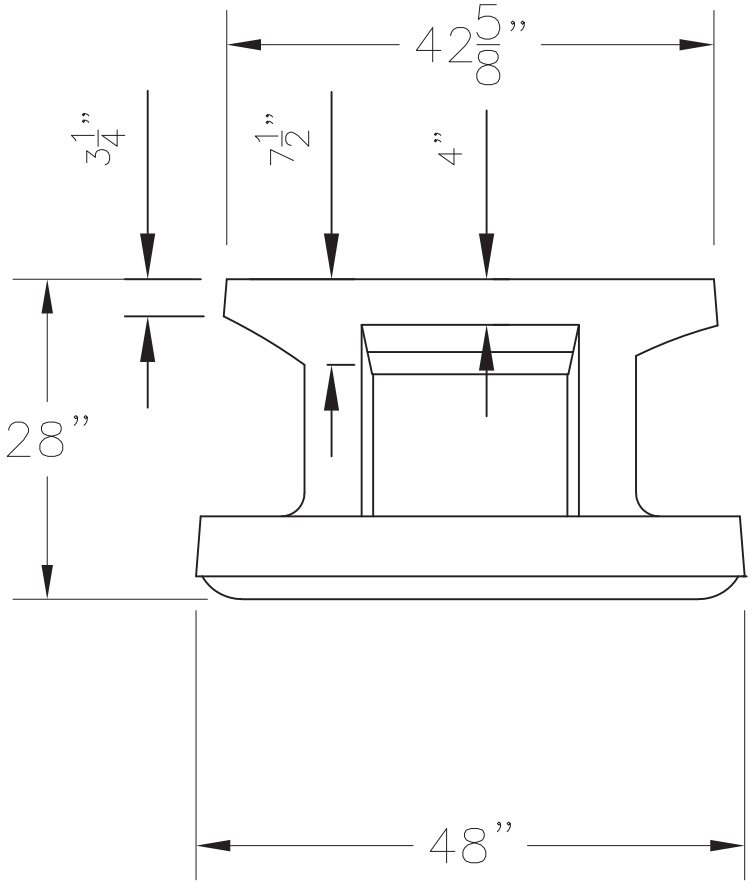

6–28 UNIT
PLAN VIEW

Checked By:SLV

Item 5.

DELTA
SPECIALTY PRECAST CONCRETE ENGINEERS
860 Hooper Road, Endwell, NY 13760
www.delta-eas.com
Phone: (607) 231-6600
Fax: (607) 231-6650

JOB	2020.548.001		
DESCRIPTION	Macbox Insert Connection		
SHEET NO.		OF	SCALE
CALCULATED BY	YL	DATE	10/16/2020
CHECKED BY		DATE	

6-28-P and 6-28 HDP Block Rear Shell Thickness for Risa Input

	Thickness at Joint (in)	Plate Thickness (in)
1	3.25	
2	3.96	3.60
3	4.67	4.31
4	5.38	5.02
5	6.08	5.73
6	6.79	6.44
7	7.50	7.15

Checked By:SLV

Item 5.

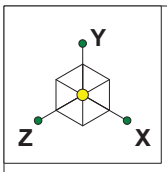

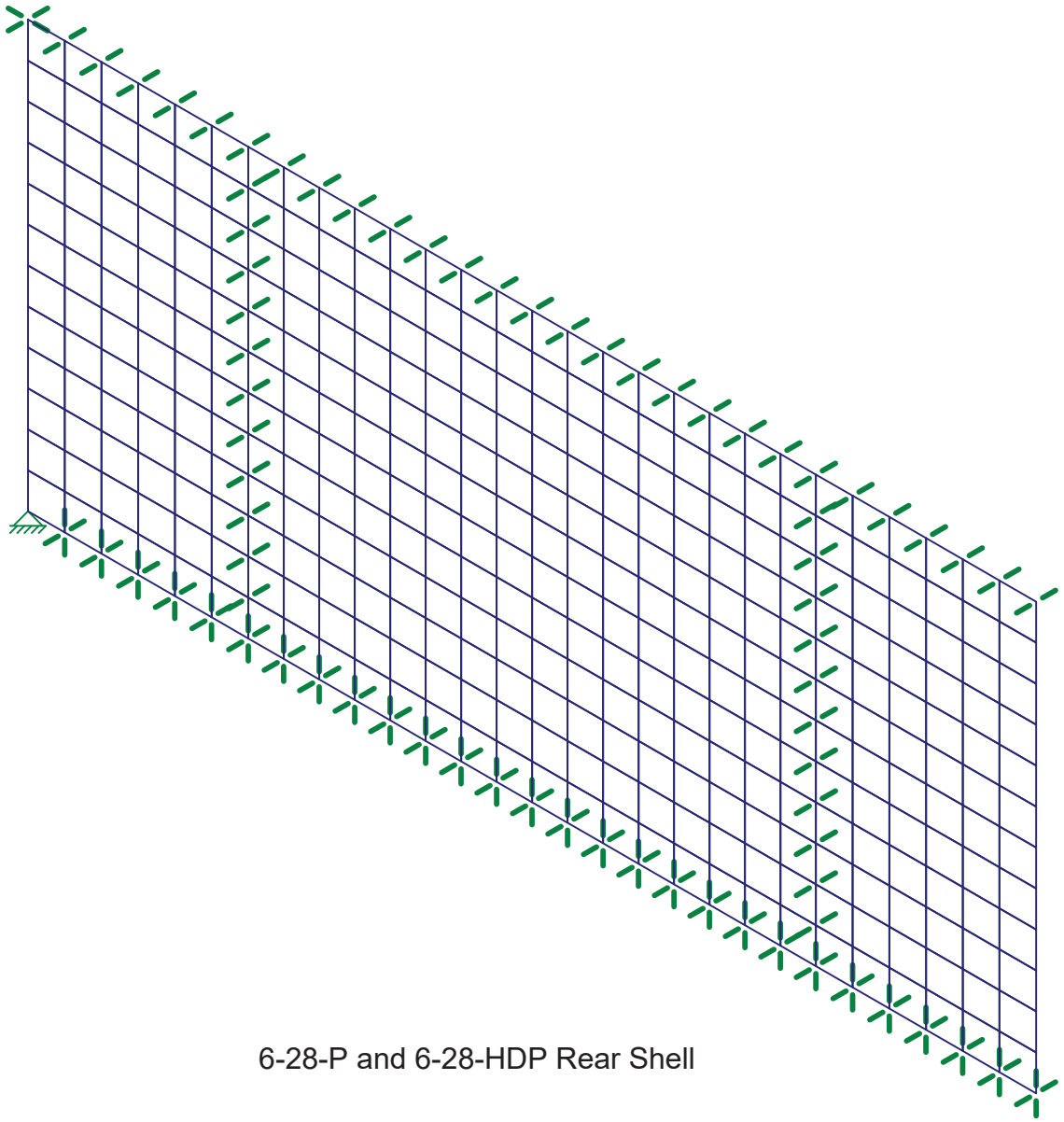

6-28-P and 6-28-HDP Rear Shell

Delta Engineers,Inc	6-28-P and 6-28-HDP	SK - 1
YL		Oct 17, 2020 at 4:03 PM
2020.548.001		6-28-P and 6-28-HDP.r3d

Checked By:SLV

Item 5.

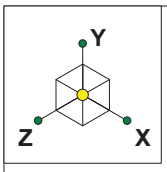

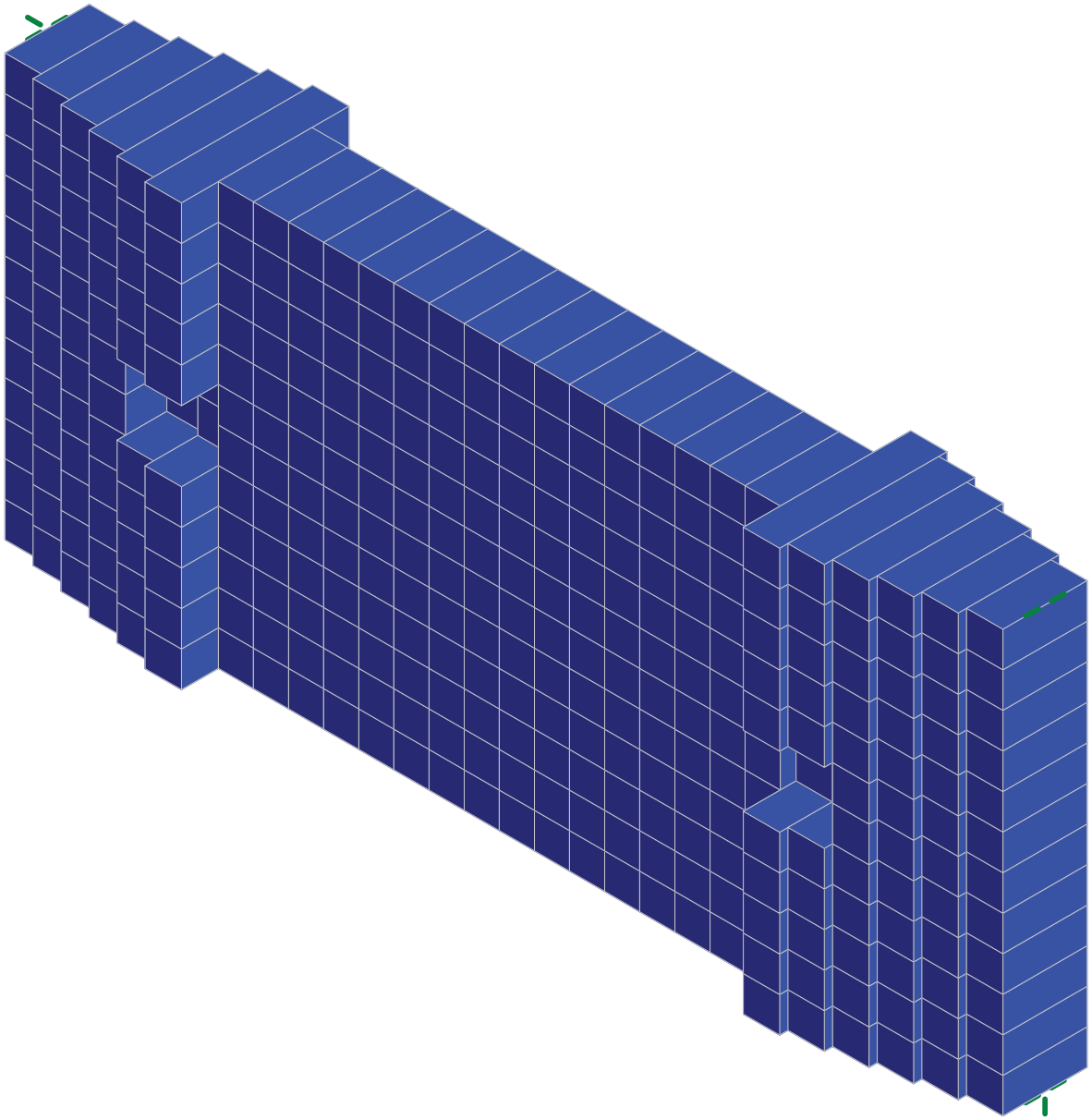

Delta Engineers,Inc	6-28-P and 6-28-HDP	SK - 2
YL		Oct 17, 2020 at 4:04 PM
2020.548.001		6-28-P and 6-28-HDP.r3d

Item 5.

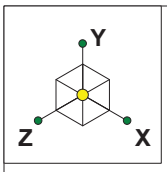

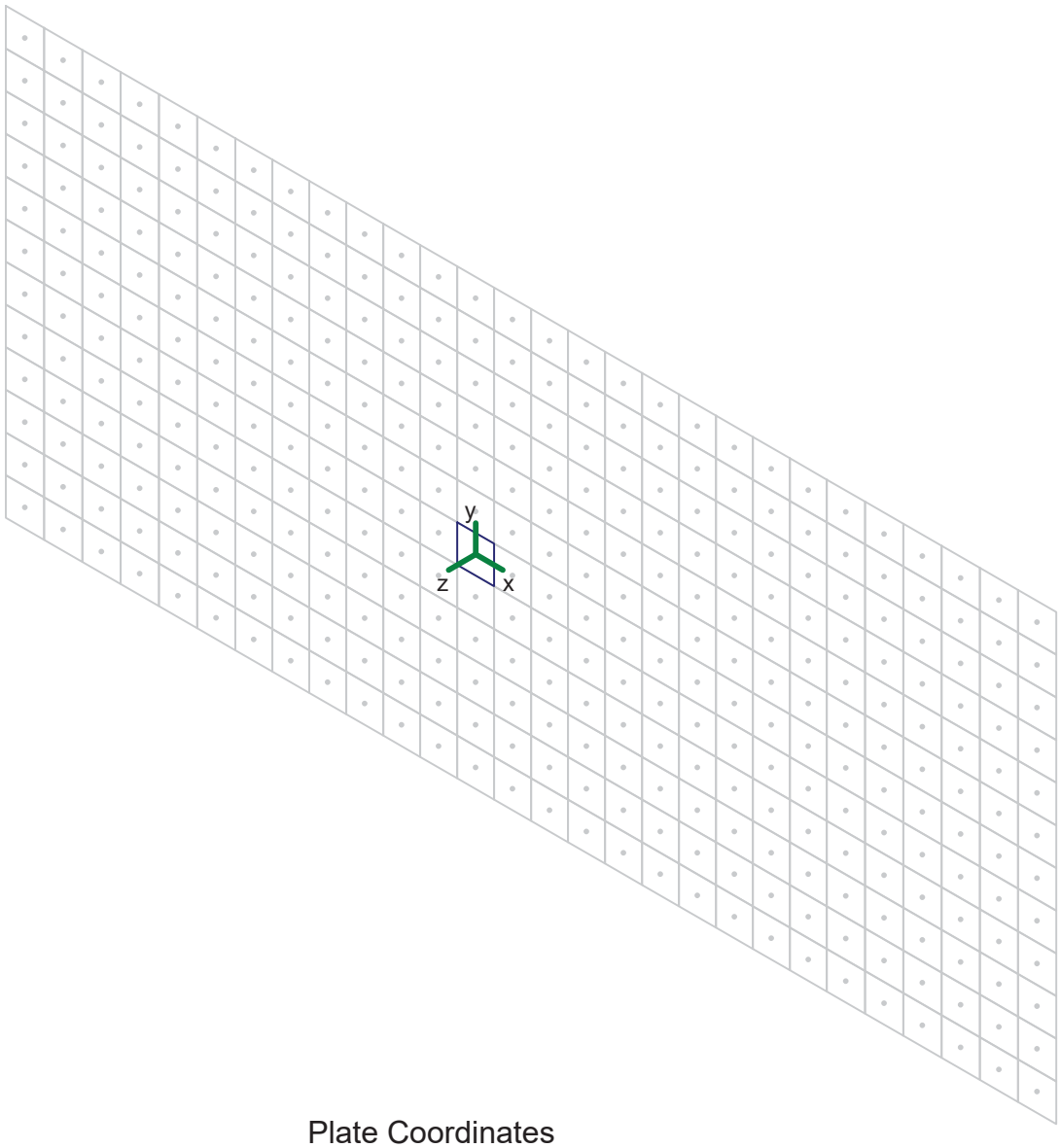

Plate Coordinates

Delta Engineers,Inc	6-28-P and 6-28-HDP	SK - 3
YL		Oct 17, 2020 at 4:05 PM
2020.548.001		6-28-P and 6-28-HDP.r3d

Item 5.

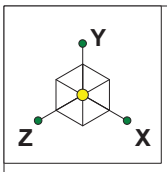

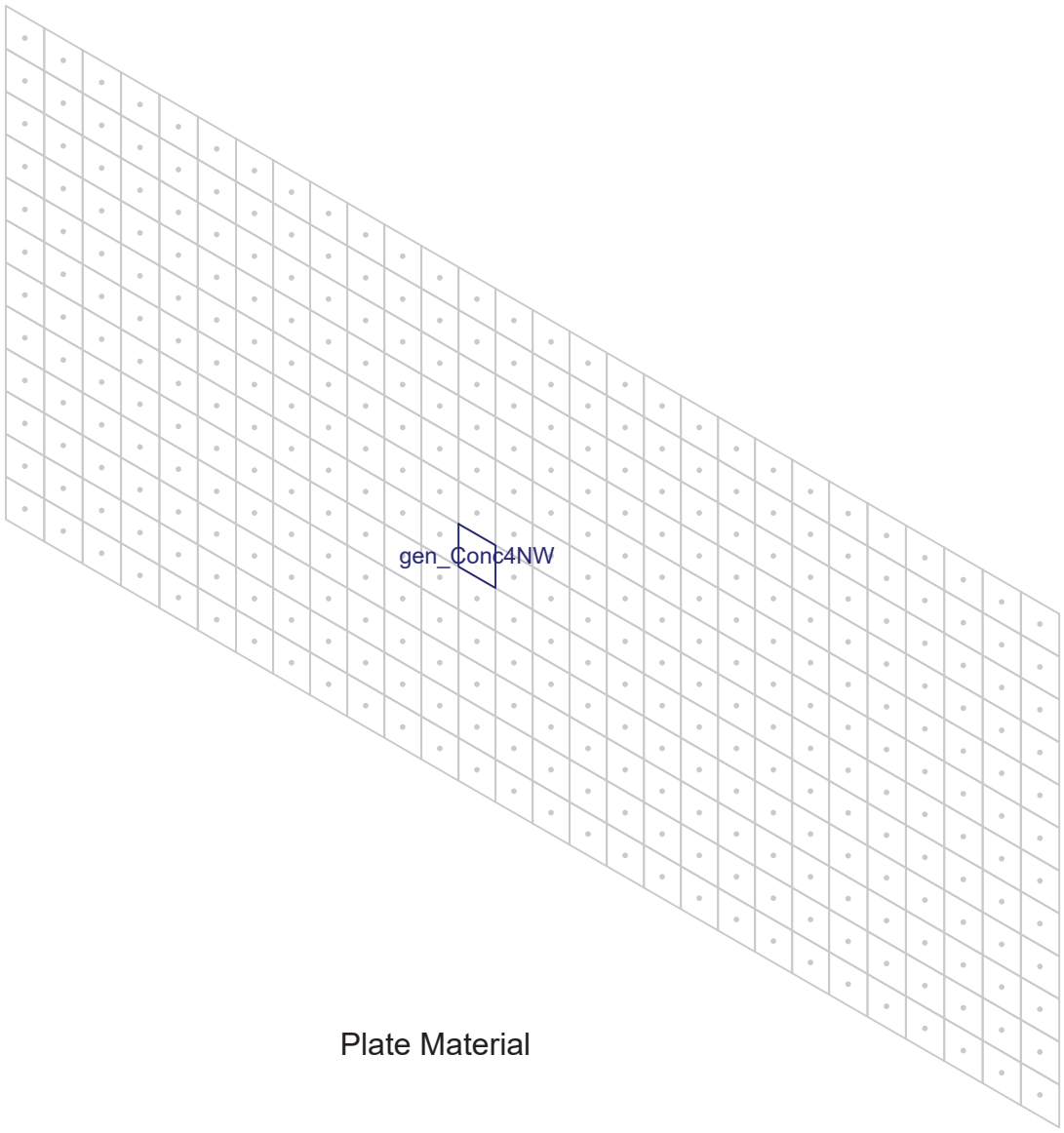

Plate Material

Delta Engineers,Inc	6-28-P and 6-28-HDP	SK - 4
YL		Oct 17, 2020 at 4:05 PM
2020.548.001		6-28-P and 6-28-HDP.r3d

Item 5.

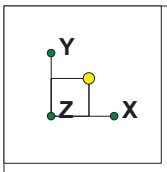

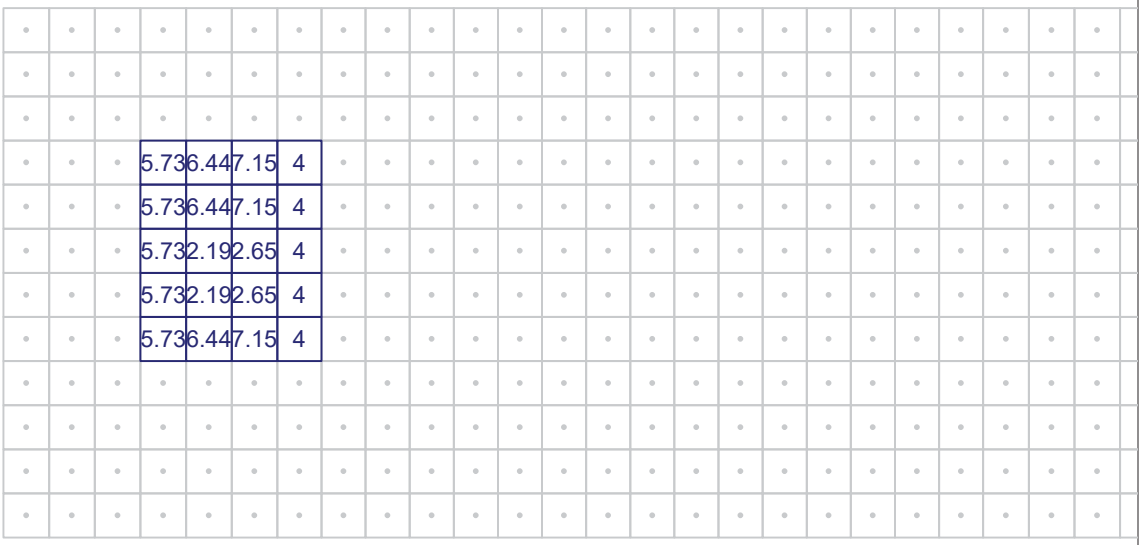

Plate Thickness

Delta Engineers,Inc	6-28-P and 6-28-HDP	SK - 5
YL		Oct 17, 2020 at 4:07 PM
2020.548.001		6-28-P and 6-28-HDP.r3d

Item 5.

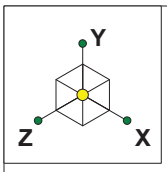

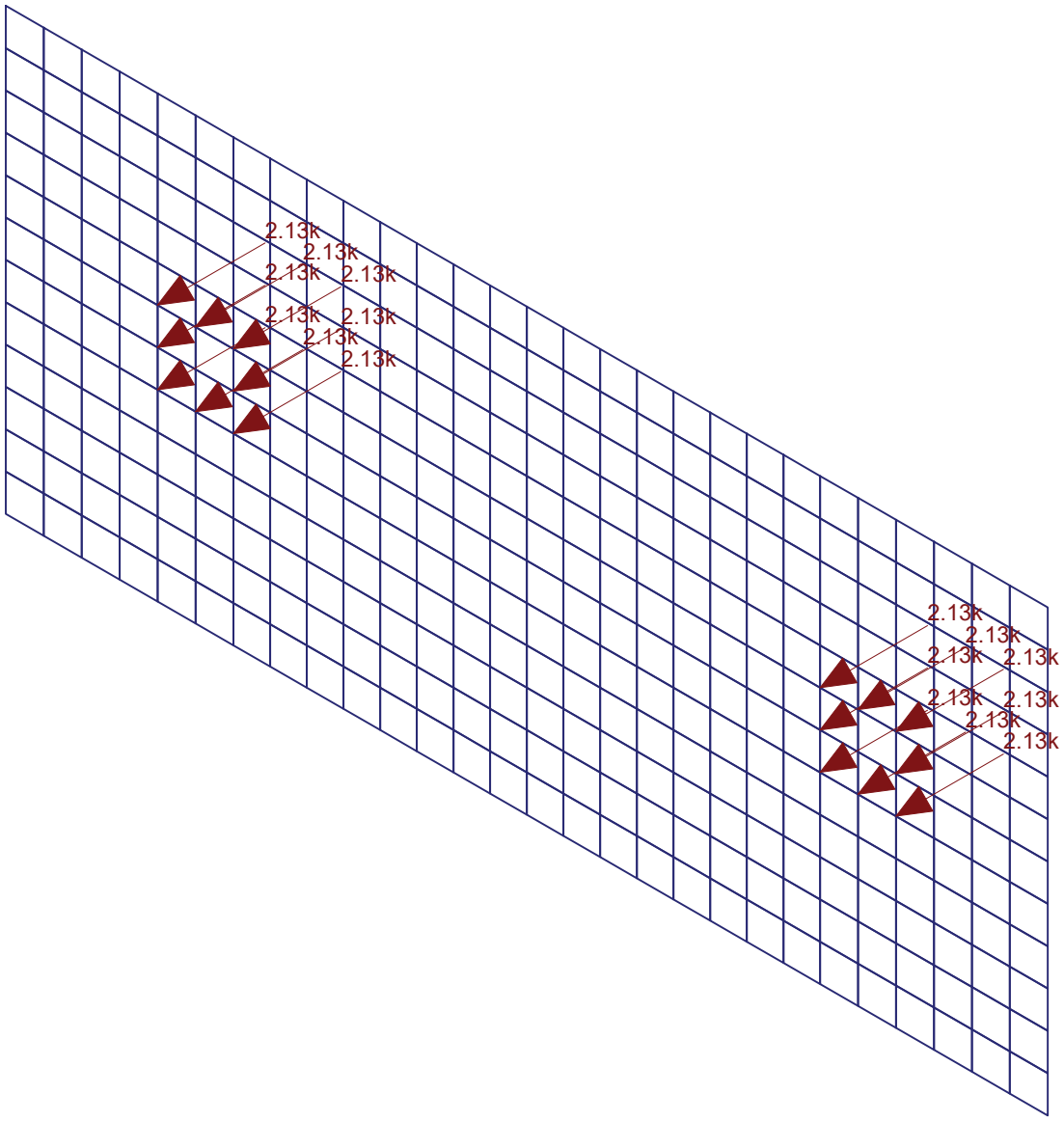

Macbox Insert Ultimate load = 17.04 k /8 = 2.13 kips

Loads: BLC 1, Macbox Insert Load

Delta Engineers,Inc	6-28-P and 6-28-HDP	SK - 6
YL		Oct 17, 2020 at 4:25 PM
2020.548.001		6-28-P and 6-28-HDP.r3d

Checked By:SLV

Item 5.

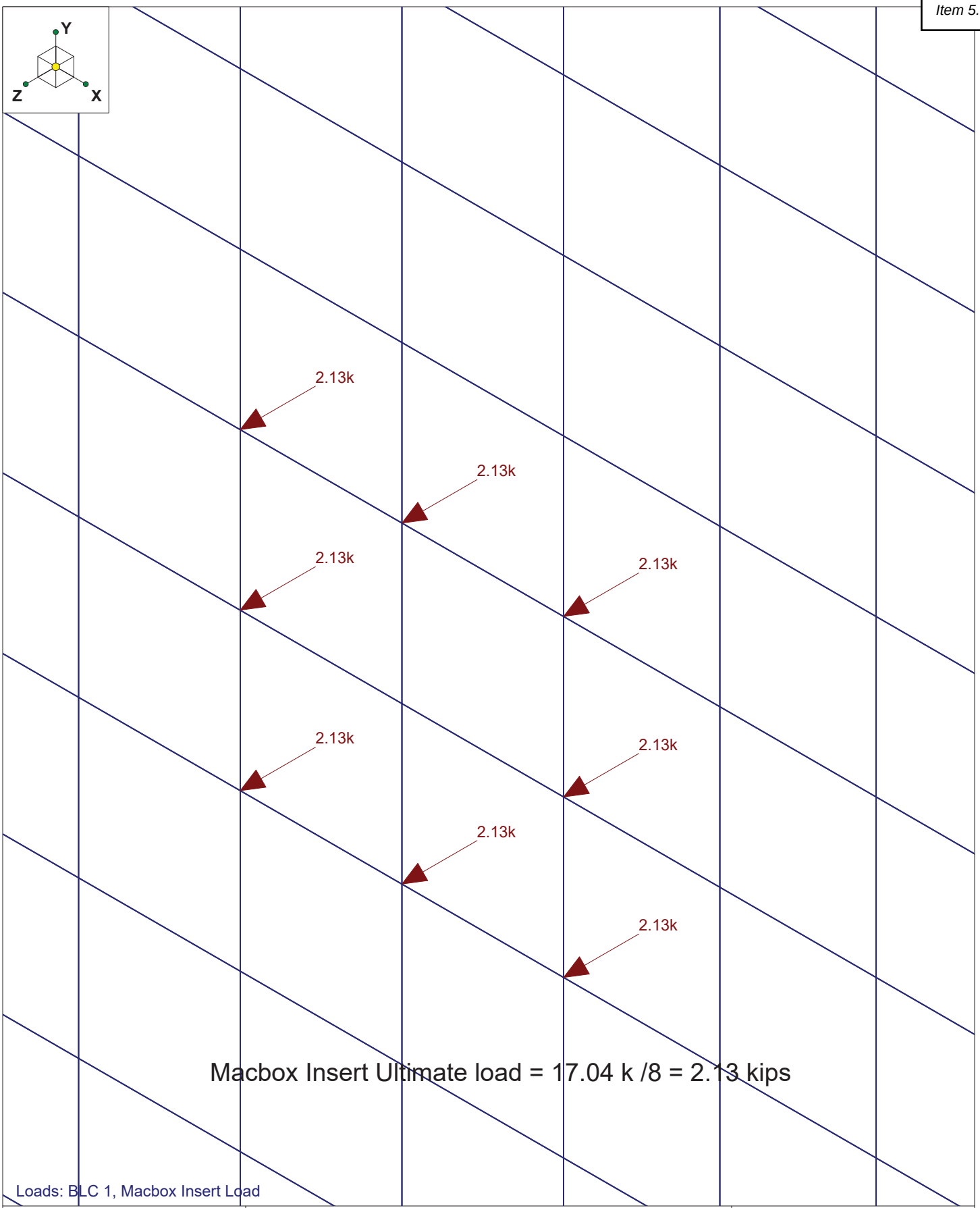

Delta Engineers,Inc	6-28-P and 6-28-HDP	SK - 7
YL		Oct 17, 2020 at 4:26 PM
2020.548.001		6-28-P and 6-28-HDP.r3d

Company : Delta Engineers,Inc
Designer : YL
Job Number : 2020.548.001
Model Name : 6-28-P and 6-28-HDP

Oct 17, 2020
4:45 PM
Checked By:_____

General Material Properties

	Label	E [ksi]	G [ksi]	Nu	Therm (/1E5 F)	Density[k/ft^3]
1	gen_Conc3NW	3155	1372	.15	.6	.145
2	gen_Conc4NW	3644	1584	.15	.6	.145
3	gen_Conc3LW	2085	906	.15	.6	.11
4	gen_Conc4LW	2408	1047	.15	.6	.11
5	gen_Alum	10600	4077	.3	1.29	.173
6	gen_Steel	29000	11154	.3	.65	.49
7	RIGID	1e+6		.3	0	0

Basic Load Cases

	BLC Description	Category	X Gravity	Y Gravity	Z Gravity	Joint	Point	Distribut...	Area(M...	Surface...
1	Macbox Insert Load	None		-1		16				

Joint Loads and Enforced Displacements (BLC 1 : Macbox Insert Load)

	Joint Label	L,D,M	Direction	Magnitude[(k,k-ft), (in,rad), (k*s^2/ft, k*s^2*ft)]
1	N91	L	Z	2.13
2	N92	L	Z	2.13
3	N113	L	Z	2.13
4	N114	L	Z	2.13
5	N134	L	Z	2.13
6	N136	L	Z	2.13
7	N137	L	Z	2.13
8	N144	L	Z	2.13
9	N146	L	Z	2.13
10	N147	L	Z	2.13
11	N192A	L	Z	2.13
12	N193A	L	Z	2.13
13	N194A	L	Z	2.13
14	N202A	L	Z	2.13
15	N203A	L	Z	2.13
16	N204A	L	Z	2.13

Load Combinations

	Description	S...	P...	S...	B...	Factor	B...	Fa...	B...	Fa...	B...	Fa...	B...	Fa...	B...	Fa...	B...	Fa...	B...	Fa...	B...	Fa...	B...	Fa...	B...	Fa...
1	Macbox Insert Ultimate Load	Y...			1	1																				

Checked By:SLV

Item 5.

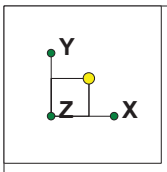

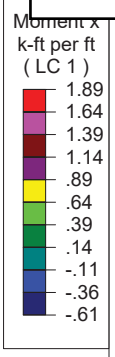

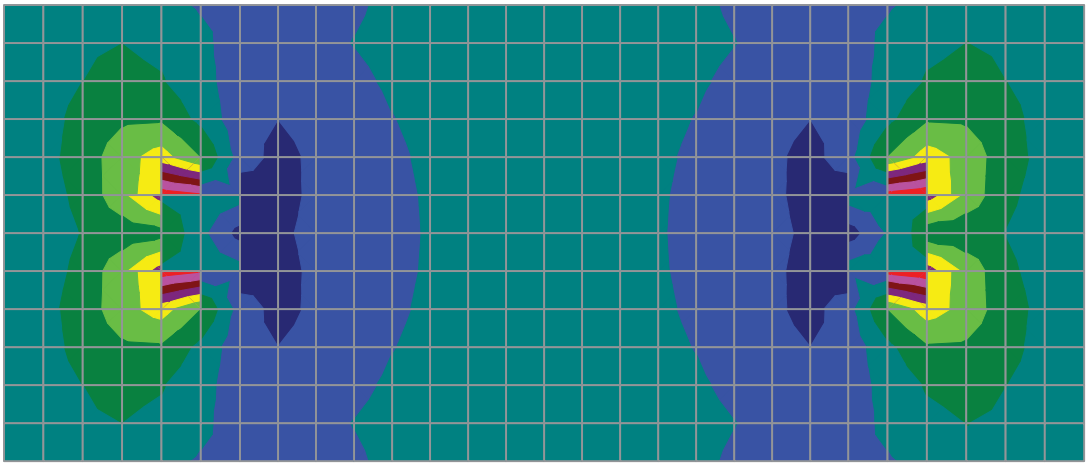

Results for LC 1, Macbox Insert Ultimate Load

Delta Engineers,Inc	6-28-P and 6-28-HDP	SK - 8
YL		Oct 17, 2020 at 4:32 PM
2020.548.001		6-28-P and 6-28-HDP.r3d

Item 5.

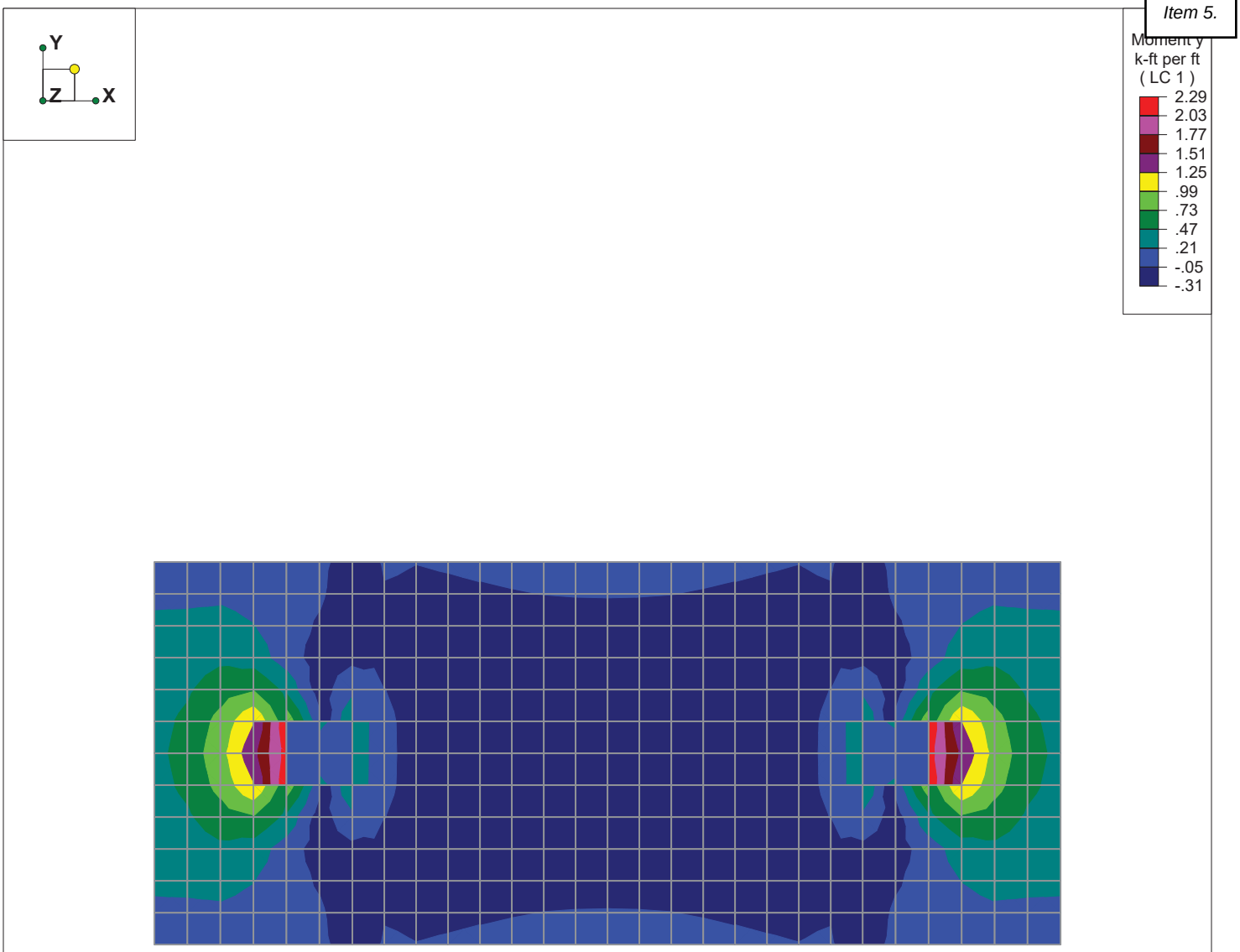

Results for LC 1, Macbox Insert Ultimate Load

Delta Engineers,Inc	6-28-P and 6-28-HDP	SK - 9
YL		Oct 17, 2020 at 4:42 PM
2020.548.001		6-28-P and 6-28-HDP.r3d

Item 5.

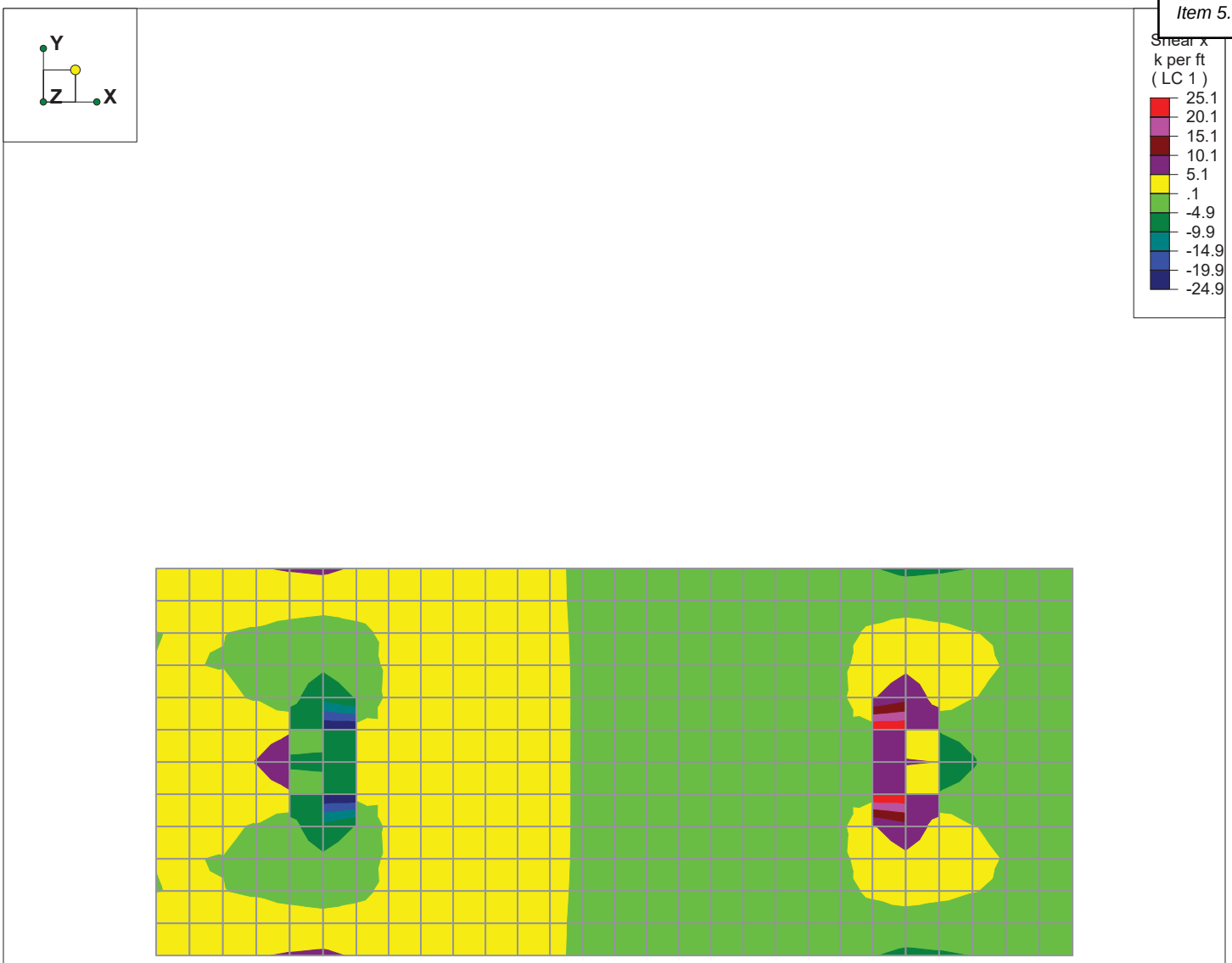

Results for LC 1, Macbox Insert Ultimate Load

Delta Engineers,Inc	6-28-P and 6-28-HDP	SK - 10
YL		Oct 17, 2020 at 4:43 PM
2020.548.001		6-28-P and 6-28-HDP.r3d

Item 5.

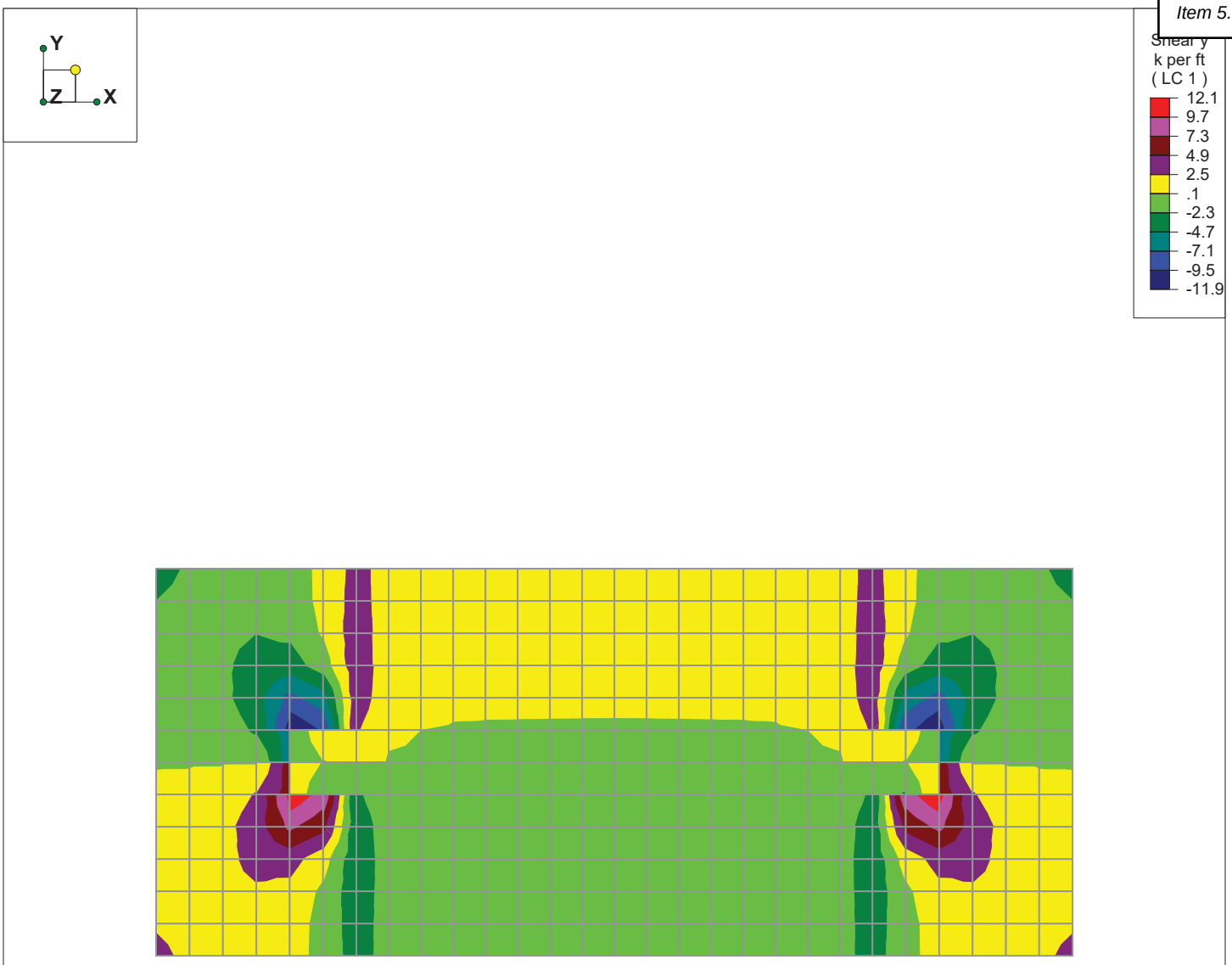

Results for LC 1, Macbox Insert Ultimate Load

Delta Engineers,Inc	6-28-P and 6-28-HDP	SK - 11
YL		Oct 17, 2020 at 4:44 PM
2020.548.001		6-28-P and 6-28-HDP.r3d

Company : Delta Engineers,Inc
Designer : YL
Job Number : 2020.548.001
Model Name : 6-28-P and 6-28-HDP

Oct 17, 2020
4:49 PM
Checked By:_____

Plate Forces (per ft) (By Combination) Max. Ultimate Mx

	LC	Plate Label	Qx[k]	Qy[k]	Mx[k-ft]	My[k-ft]	Mxy[k-ft]	Fx[k]	Fy[k]	Fxy[k]
1	1	P169A	7.402	10.236	1.295	.412	-.122	0	-.057	0
2	1	P158A	7.402	-10.236	1.295	.412	.122	0	-.035	0
3	1	P120	-7.161	10.181	1.257	.416	.13	0	-.058	0
4	1	P109A	-7.161	-10.181	1.257	.416	-.13	0	-.036	0
5	1	P160B	-1.77	-7.271	.788	.871	-.179	0	-.041	0
6	1	P171A	-1.77	7.271	.788	.871	.179	0	-.064	0
7	1	P107	1.816	-7.172	.778	.873	.161	0	-.041	0
8	1	P118	1.816	7.172	.778	.873	-.161	0	-.065	0
9	1	P109	6.36	-3.804	.616	1.974	.33	0	-.062	0
10	1	P116	6.36	3.804	.616	1.974	-.33	0	-.071	0
11	1	P162A	-6.424	-3.999	.582	2.001	-.364	0	-.063	0
12	1	P169B	-6.424	3.999	.582	2.001	.364	0	-.072	0
13	1	P289	-1.2	-1.652	-.576	-.013	-.252	0	-.045	0
14	1	P263	-1.2	1.652	-.576	-.013	.252	0	-.03	0
15	1	P241A	1.198	1.643	-.575	-.013	-.251	0	-.029	0
16	1	P267	1.198	-1.643	-.575	-.013	.251	0	-.045	0
17	1	P178B	1.241	4.148	.564	.322	-.296	0	-.069	0
18	1	P153A	1.241	-4.148	.564	.322	.296	0	-.03	0
19	1	P100	-1.213	-4.125	.554	.328	-.298	0	-.03	0
20	1	P125	-1.213	4.125	.554	.328	.298	0	-.07	0

Approximate Cracking Moment = 5*4000^0.5*12*6.44^2/6/12000=2.18 k-ft/ft, OK

See following pages for plate thickness information.

Plate Primary Data

	Label	A Joint	B Joint	C Joint	D Joint	Material	Thickness[in]
33	P109A	N87	N128	N136	N134	gen_Conc4NW	6.44
34	P110	N128	N88	N137	N136	gen_Conc4NW	7.15
35	P111	N134	N136	N138	N91	gen_Conc4NW	2.19
36	P112	N136	N137	N92	N138	gen_Conc4NW	2.65
37	P112A	N89	N132	N140	N139	gen_Conc4NW	3.6
38	P113	N132	N90	N141	N140	gen_Conc4NW	4.31
39	P114	N139	N140	N142	N93	gen_Conc4NW	3.6
40	P115	N140	N141	N94	N142	gen_Conc4NW	4.31
41	P115A	N90	N135	N143	N141	gen_Conc4NW	5.02
42	P116	N135	N91	N144	N143	gen_Conc4NW	5.73
43	P117	N141	N143	N145	N94	gen_Conc4NW	5.02
44	P118	N143	N144	N95	N145	gen_Conc4NW	5.73
45	P118A	N91	N138	N146	N144	gen_Conc4NW	2.19
46	P119	N138	N92	N147	N146	gen_Conc4NW	2.65
47	P120	N144	N146	N148	N95	gen_Conc4NW	6.44

Plate Primary Data

	Label	A Joint	B Joint	C Joint	D Joint	Material	Thickness[in]
98	P158A	N185A	N110	N194A	N193A	gen_Conc4NW	6.44
99	P159A	N192A	N193A	N195A	N113	gen_Conc4NW	2.65
100	P160A	N193A	N194A	N114	N195A	gen_Conc4NW	1.94
101	P160B	N110	N188A	N196A	N194A	gen_Conc4NW	5.73
102	P161A	N188A	N111	N197A	N196A	gen_Conc4NW	5.02
103	P162A	N194A	N196A	N198A	N114	gen_Conc4NW	5.73
104	P163A	N196A	N197A	N115	N198A	gen_Conc4NW	5.02
105	P163B	N111	N191A	N199A	N197A	gen_Conc4NW	4.31
106	P164A	N191A	N112	N200A	N199A	gen_Conc4NW	3.6
107	P165A	N197A	N199A	N201A	N115	gen_Conc4NW	4.31
108	P166A	N199A	N200A	N116	N201A	gen_Conc4NW	3.6
109	P166B	N113	N195A	N203A	N202A	gen_Conc4NW	2.65
110	P167A	N195A	N114	N204A	N203A	gen_Conc4NW	1.94
111	P168A	N202A	N203A	N205A	N117	gen_Conc4NW	7.15
112	P169A	N203A	N204A	N118	N205A	gen_Conc4NW	6.44

Plate Forces (per ft) (By Combination) Max. Ultimate My

	LC	Plate Label	Qx[k]	Qy[k]	Mx[k-ft]	My[k-ft]	Mxy[k-ft]	Fx[k]	Fy[k]	Fxy[k]
1	1	P162A	-6.424	-3.999	.582	2.001	-.364	0	-.063	0
2	1	P169B	-6.424	3.999	.582	2.001	.364	0	-.072	0
3	1	P109	6.36	-3.804	.616	1.974	.33	0	-.062	0
4	1	P116	6.36	3.804	.616	1.974	-.33	0	-.071	0
5	1	P163A	-2.297	-1.079	.251	1.159	-.059	0	-.044	0
6	1	P170A	-2.297	1.079	.251	1.159	.059	0	-.051	0
7	1	P108	2.312	-1.086	.264	1.144	.051	0	-.045	0
8	1	P115A	2.312	1.086	.264	1.144	-.051	0	-.052	0
9	1	P107	1.816	-7.172	.778	.873	.161	0	-.041	0
10	1	P118	1.816	7.172	.778	.873	-.161	0	-.065	0
11	1	P160B	-1.77	-7.271	.788	.871	-.179	0	-.041	0
12	1	P171A	-1.77	7.271	.788	.871	.179	0	-.064	0
13	1	P161A	-1.391	-2.604	.314	.83	-.053	0	-.037	0
14	1	P172A	-1.391	2.604	.314	.83	.053	0	-.058	0
15	1	P106A	1.391	-2.588	.315	.828	.042	0	-.038	0
16	1	P117	1.391	2.588	.315	.828	-.042	0	-.059	0
17	1	P172B	-.894	.442	.088	.71	.009	0	-.041	0
18	1	P165A	-.894	-.442	.088	.71	-.009	0	-.035	0
19	1	P106	.905	-.445	.092	.705	.007	0	-.036	0
20	1	P113	.905	.445	.092	.705	-.007	0	-.042	0

Item 5.

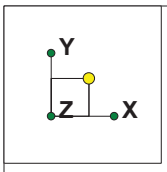

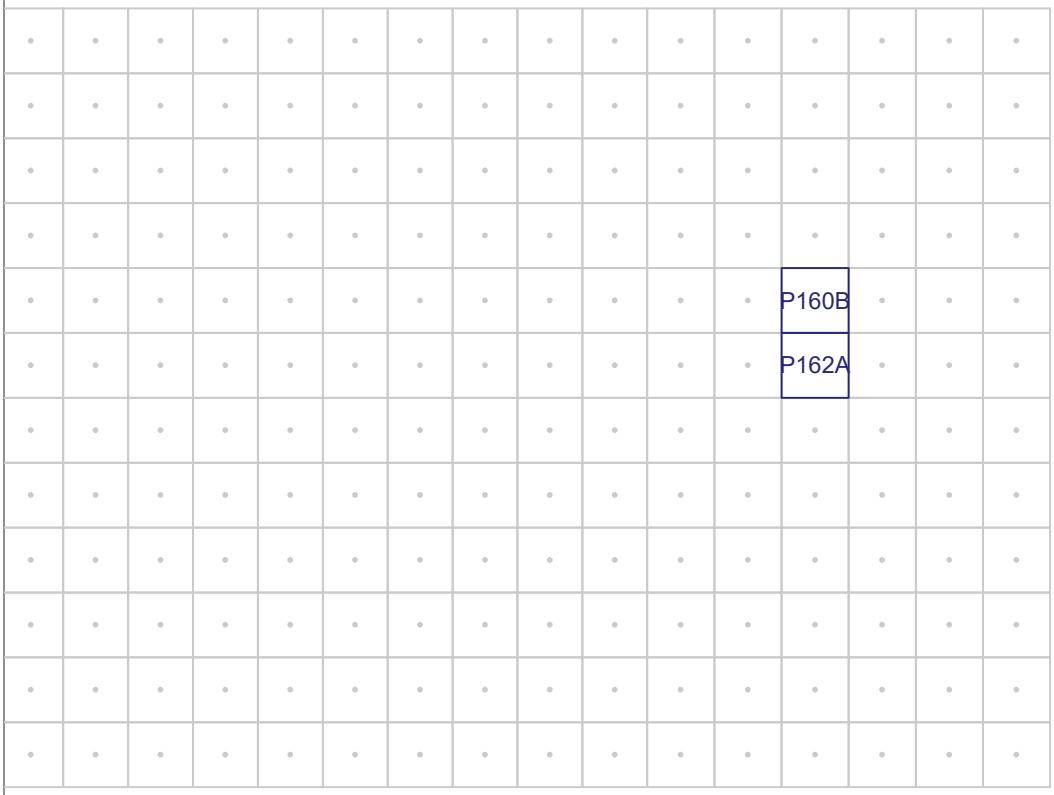

Selected Plates for Max. Average Ultimate My

Delta Engineers,Inc	6-28-P and 6-28-HDP	SK - 13
YL		Oct 17, 2020 at 7:55 PM
2020.548.001		6-28-P and 6-28-HDP.r3d

Plate Forces (per ft) (By Combination) Selected Plates for Max. Average Ultimate My

	LC	Plate Label	Qx[k]	Qy[k]	Mx[k-ft]	My[k-ft]	Mxy[k-ft]	Fx[k]	Fy[k]	Fxy[k]
1	1	P160B	-1.77	-7.271	.788	.871	-.179	0	-.041	0
2	1	P162A	-6.424	-3.999	.582	2.001	-.364	0	-.063	0

Max. Average Ultimate My = 1.44 k-ft/ft
Approximate Cracking Moment = 5*4000^0.5*12*5.73^2/6/12000=1.73 k-ft/ft, OK
See previous pages for plate thickness information.

Checked By:SLV

Item 5.

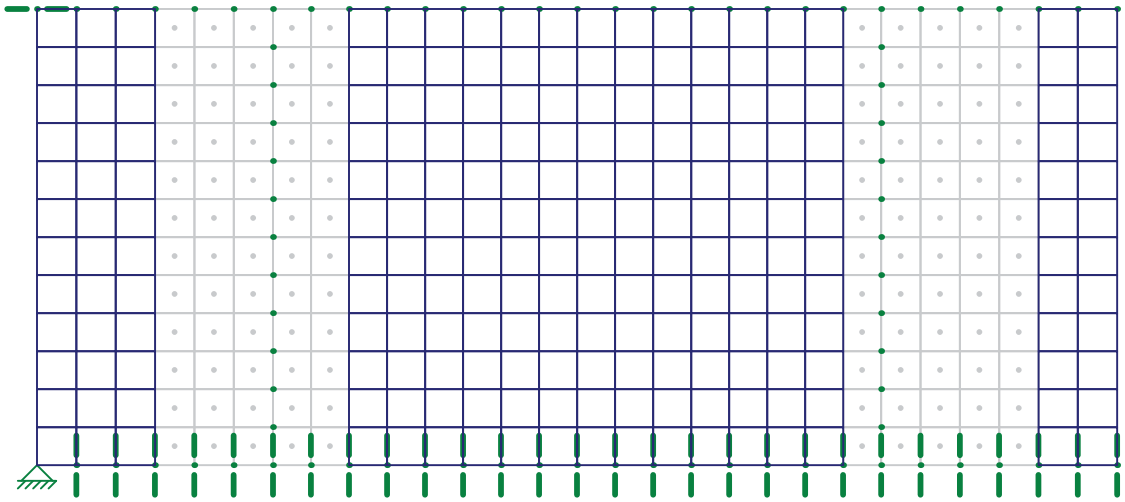

Selected Plates for Shear Results

Plate Forces (per ft) (By Combination)

Max. Utlimate Qx

	LC	Plate Label	Qx[k]	Qy[k]	Mx[k-ft]	My[k-ft]	Mxy[k-ft]	Fx[k]	Fy[k]	Fxy[k]
1	1	P88B	2.822	-2.164	.131	.096	-.214	0	0	0
2	1	P135	2.822	2.164	.131	.096	.214	0	-.084	0
3	1	P108	2.312	-1.086	.264	1.144	.051	0	-.045	0
4	1	P115A	2.312	1.086	.264	1.144	-.051	0	-.052	0
5	1	P145B	-2.172	-2.094	.102	.101	.141	0	0	0
6	1	P192	-2.172	2.094	.102	.101	-.141	0	-.071	0
7	1	P86A	2.171	-2.098	.101	.102	-.142	.006	0	0
8	1	P133	2.171	2.098	.101	.102	.142	-.005	-.072	0
9	1	P214A	-1.544	1.271	-.195	-.042	.083	0	0	0
10	1	P336	-1.544	-1.271	-.195	-.042	-.083	0	-.068	0
11	1	P106A	1.391	-2.588	.315	.828	.042	0	-.038	0
12	1	P117	1.391	2.588	.315	.828	-.042	0	-.059	0
13	1	P85A	1.36	-2.429	.036	.094	-.061	.008	0	0
14	1	P132	1.36	2.429	.036	.094	.061	-.007	-.063	0
15	1	P193	-1.36	2.422	.036	.093	-.061	0	-.059	0
16	1	P146A	-1.36	-2.422	.036	.093	.061	0	0	0
17	1	P334	-1.005	-.901	-.14	-.042	-.038	0	-.069	0
18	1	P212	-1.005	.901	-.14	-.042	.038	0	0	0
19	1	P318	1.003	-.898	-.14	-.042	.038	0	-.069	0
20	1	P196A	1.003	.898	-.14	-.042	-.038	0	0	0

Approximate Plain Conc. Shear Capacity = 0.6*4/3*4000^0.5*12*5.02 = 3.05 kips, OK

Company : Delta Engineers,Inc
Designer : YL
Job Number : 2020.548.001
Model Name : 6-28-P and 6-28-HDP

Oct 17, 2020
4:56 PM
Checked By:_____

Plate Forces (per ft) (By Combination) Max. Ultimate Qy

	LC	Plate Label	Qx[k]	Qy[k]	Mx[k-ft]	My[k-ft]	Mxy[k-ft]	Fx[k]	Fy[k]	Fxy[k]
1	1	P99	.316	-2.778	.303	.484	-.134	0	-.028	0
2	1	P124A	.316	2.778	.303	.484	.134	0	-.064	0
3	1	P106A	1.391	-2.588	.315	.828	.042	0	-.038	0
4	1	P117	1.391	2.588	.315	.828	-.042	0	-.059	0
5	1	P85A	1.36	-2.429	.036	.094	-.061	.008	0	0
6	1	P132	1.36	2.429	.036	.094	.061	-.007	-.063	0
7	1	P146A	-1.36	-2.422	.036	.093	.061	0	0	0
8	1	P193	-1.36	2.422	.036	.093	-.061	0	-.059	0
9	1	P97A	-.021	-2.208	.226	.308	-.314	0	-.019	0
10	1	P126	-.021	2.208	.226	.308	.314	0	-.07	0
11	1	P88B	2.822	-2.164	.131	.096	-.214	0	0	0
12	1	P135	2.822	2.164	.131	.096	.214	0	-.084	0
13	1	P86A	2.171	-2.098	.101	.102	-.142	.006	0	0
14	1	P133	2.171	2.098	.101	.102	.142	-.005	-.072	0
15	1	P145B	-2.172	-2.094	.102	.101	.141	0	0	0
16	1	P192	-2.172	2.094	.102	.101	-.141	0	-.071	0
17	1	P90	.682	-1.926	.166	.225	-.378	0	-.011	0
18	1	P133A	.682	1.926	.166	.225	.378	0	-.077	0
19	1	P88A	.594	-1.676	.088	.24	-.223	0	-.009	0
20	1	P131	.594	1.676	.088	.24	.223	0	-.067	0

Approximate Plain Conc. Shear Capacity = 0.6*4/3*4000^0.5*12*5.02 = 3.05 kips, OK

DELTA
SPECIALTY PRECAST CONCRETE ENGINEERS
860 Hooper Road, Endwell, NY 13760
www.delta-eas.com
Phone: (607) 231-6600
Fax: (607) 231-6650

Item 5.

JOB	2020.548.001			
DESCRIPTION	Macbox Insert Connection			
SHEET NO.		OF	SCALE	
CALCULATED BY	YL		DATE	10/18/2020
CHECKED BY			DATE	

Paraweb/Macbox Insert Blocks Reinforcing Information

NOTES:

1. ALL MESH SHALL BE W8xW8–6x6 WWF PER ASTM A185/A497/A1064, GRADE 65 U.N.O.
2. ALL #5 BARS SHALL BE GRADE 60.
3. USE FOR PARAWEB MSE WALL IN TOP 36 FEET.

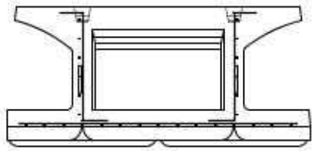

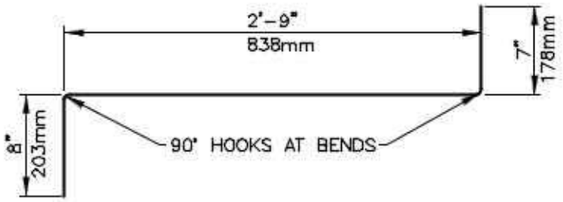

BENT WEB MESH – PLAN VIEW

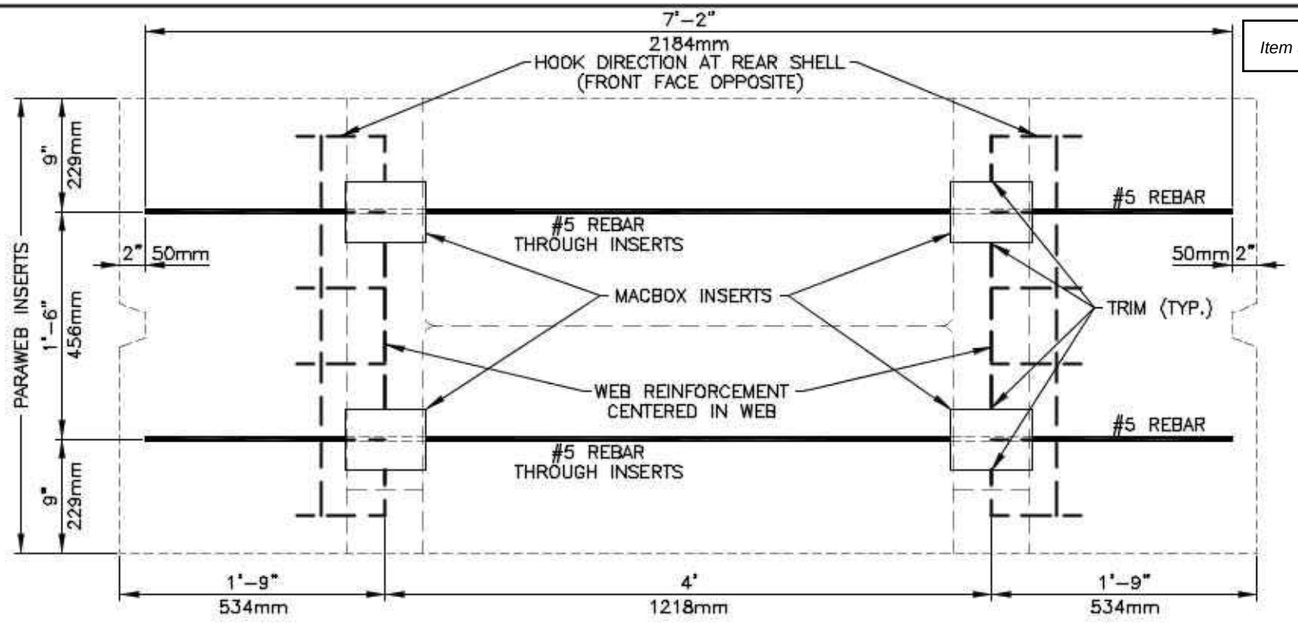

REAR SHELL MESH w/PARAWEB INSERTS

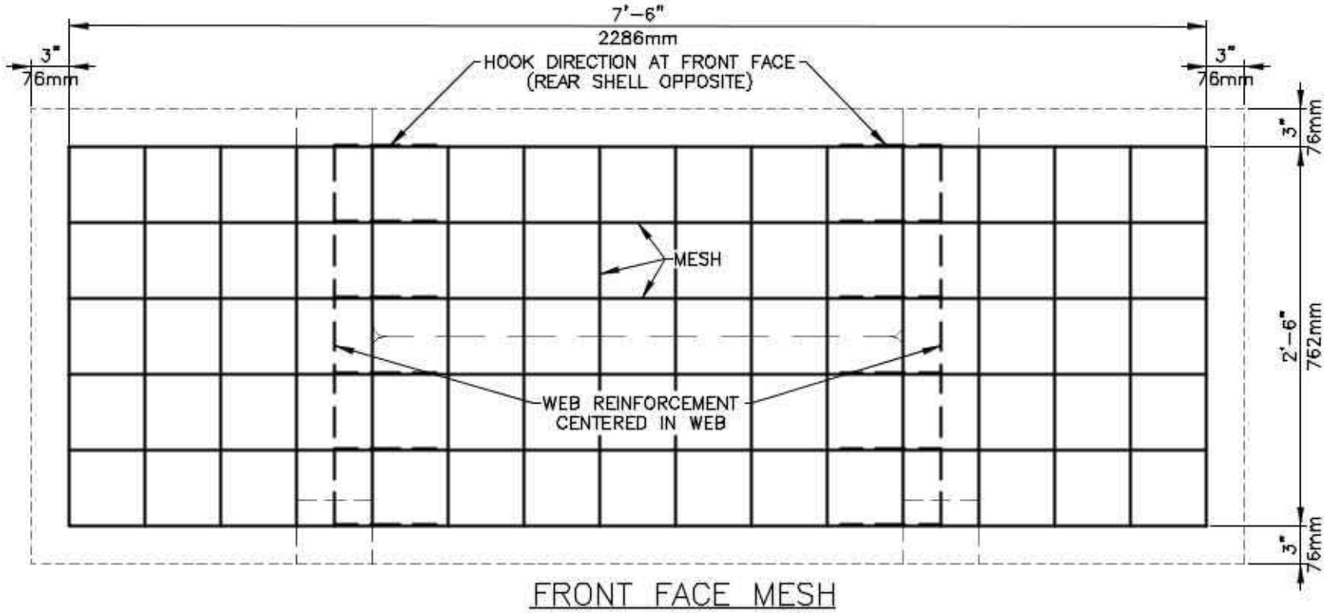

FRONT FACE MESH

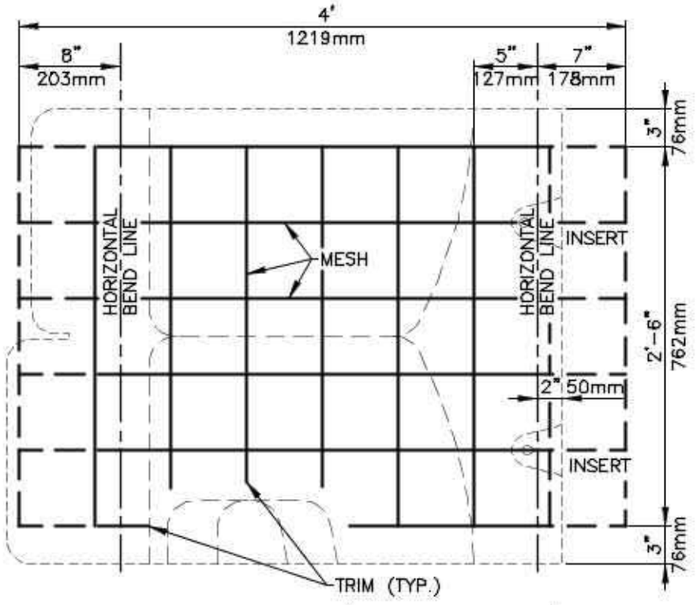

BENT WEB MESH (2 REQUIRED)

24SF PARAWEB UNIT (24SF–P) – MESH OPTION

NOT TO SCALE

DISCLAIMER:

These typical details are preliminary and conceptual in nature. They are provided for general information purposes only. Anyone making use of these details and related information does so at their own risk and assumes all liability for such use. Site specific design should be performed by a licensed Professional Engineer who is familiar with the actual site conditions, materials, and local practices.

Thiele Geotech, Inc. and Stone Strong LLC are the authors of these drawings and retain all common law, statutory, and other reserved rights including the copyright. Limited license is granted to copy, reproduce, or modify the details to prepare construction drawings for Stone Strong retaining walls. Thiele Geotech, Inc. and Stone Strong LLC make no warranties, either expressed or implied, of merchantability or fitness for any particular purpose, and accept no responsibility for the accuracy, suitability, or completeness of information contained herein.

STONE STRONG SYSTEMS®

www.stonestrong.com

PROJECT

REINFORCING DETAILS

STONE STRONG SYSTEMS

DATE: 12/16/19 | FILE: 07_24SF–P Mesh

NOTES:
1. ALL STEEL SHALL BE #4 BARS, GRADE 60, U.N.O.
2. ALL #5 BARS SHALL BE GRADE 60.
3. USE FOR PARAWEB MSE WALL IN TOP 36 FEET.

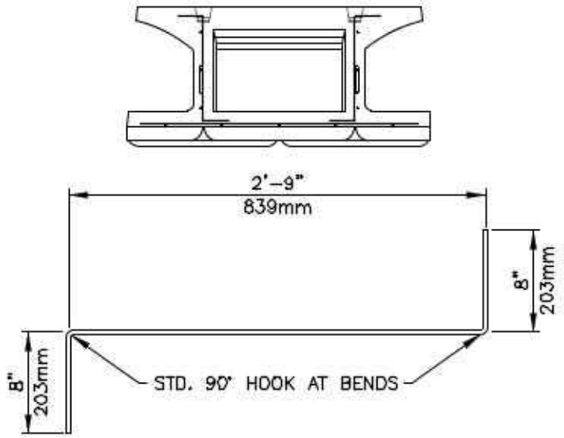

BENT WEB REBAR – PLAN VIEW

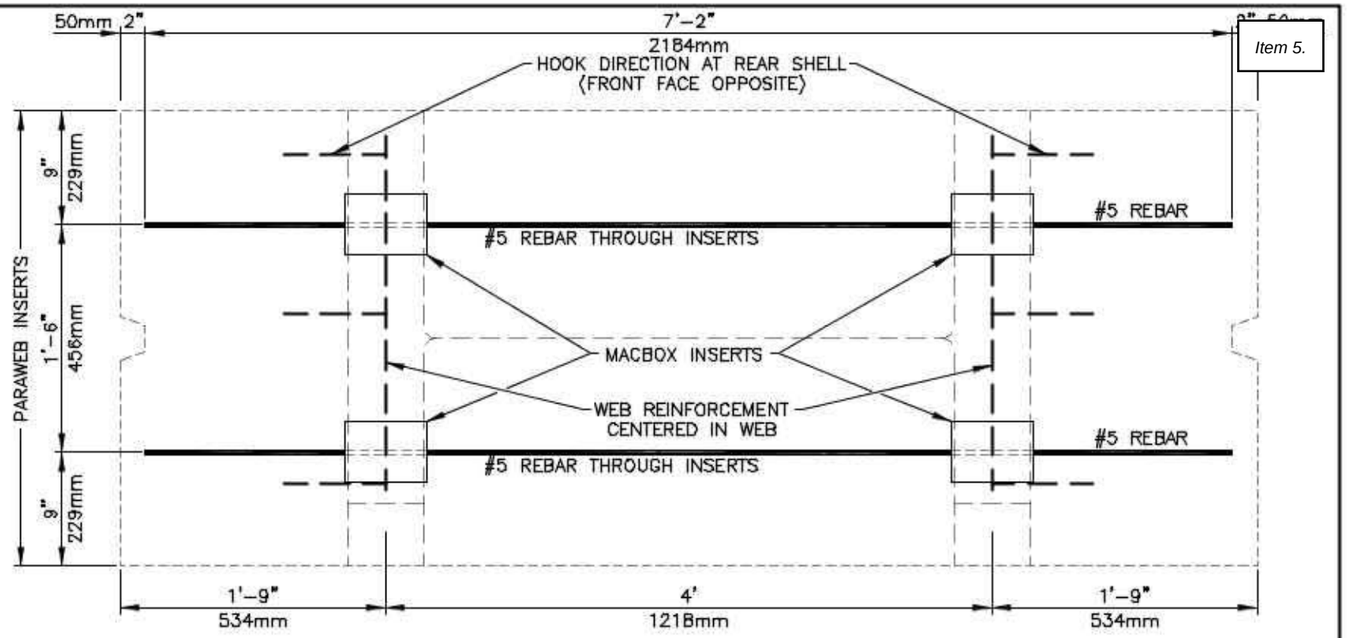

REAR SHELL REBAR

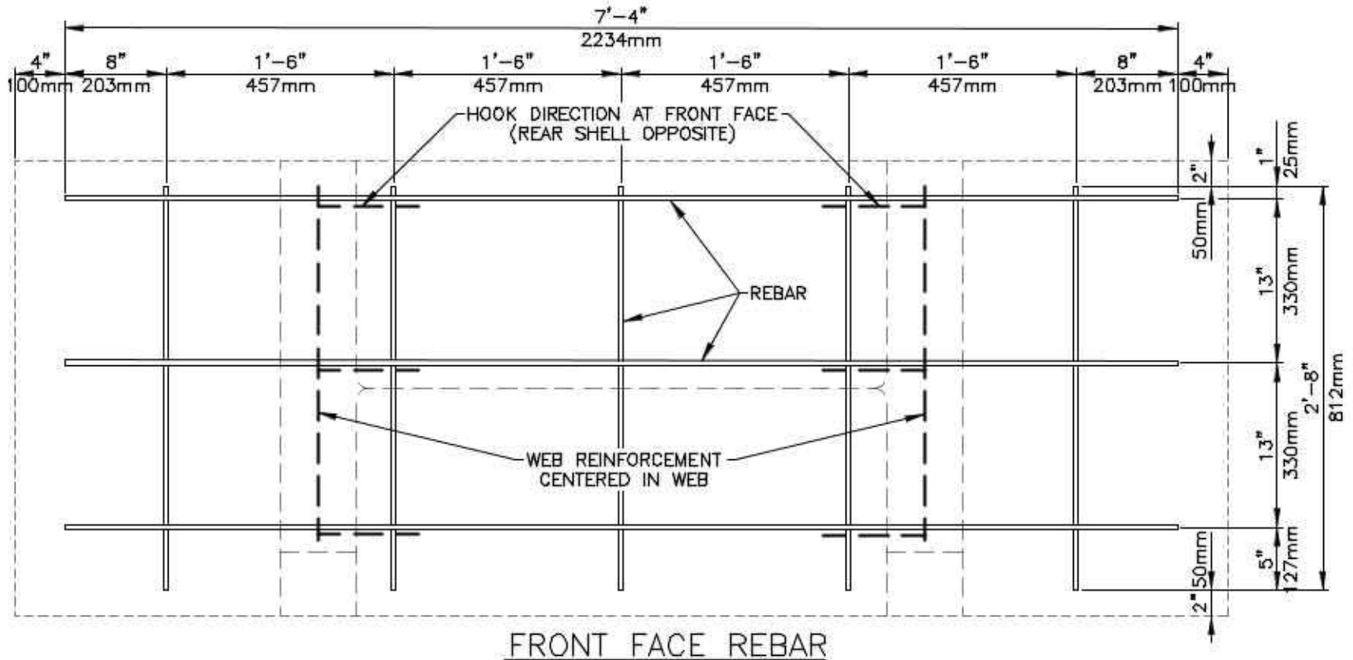

FRONT FACE REBAR

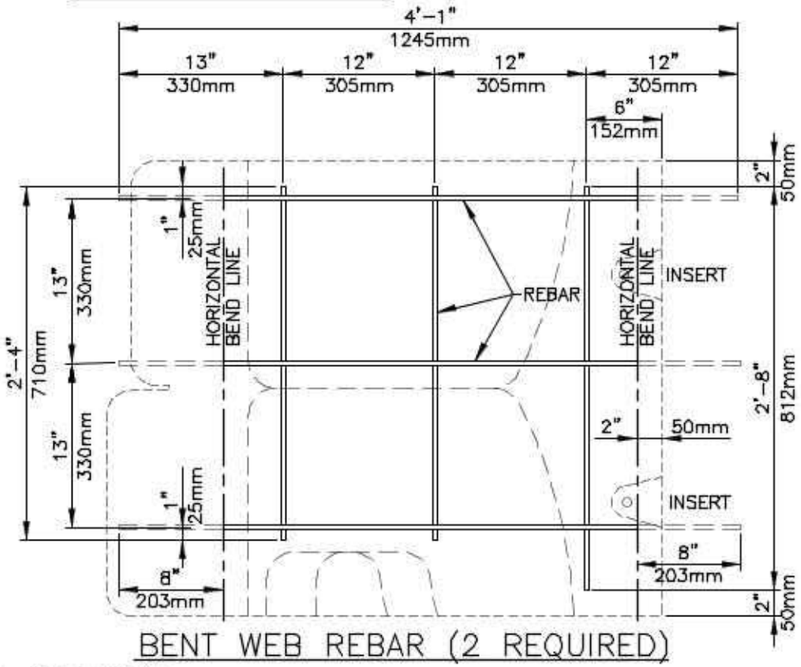

BENT WEB REBAR (2 REQUIRED)

24SF PARAWEB UNIT (24SF-P) – REBAR OPTION

NOT TO SCALE

DISCLAIMER:
These typical details are preliminary and conceptual in nature. They are provided for general information purposes only. Anyone making use of these details and related information does so at their own risk and assumes all liability for such use. Site specific design should be performed by a licensed Professional Engineer who is familiar with the actual site conditions, materials, and local practices.

Thiele Geotech, Inc. and Stone Strong LLC are the authors of these drawings and retain all common law, statutory, and other reserved rights including the copyright. Limited license is granted to copy, reproduce, or modify the details to prepare construction drawings for Stone Strong retaining walls. Thiele Geotech, Inc. and Stone Strong LLC make no warranties, either expressed or implied, of merchantability or fitness for any particular purpose, and accept no responsibility for the accuracy, suitability, or completeness of information contained herein.

STONE STRONG SYSTEMS®
www.stonestrong.com

PROJECT
REINFORCING DETAILS
STONE STRONG SYSTEMS

794

DATE: 12/16/19 | FILE: 08_24SF-P Rebar

NOTES:

1. ALL MESH SHALL BE W8xW8-6x6 WWF PER ASTM A185/A497/A1064, GRADE 65 U.N.O.
2. ALL #5 BARS SHALL BE GRADE 60.
3. USE IN PARAWEB MSE WALL BETWEEN 36 AND 51 FEET BELOW TOP OF WALL.

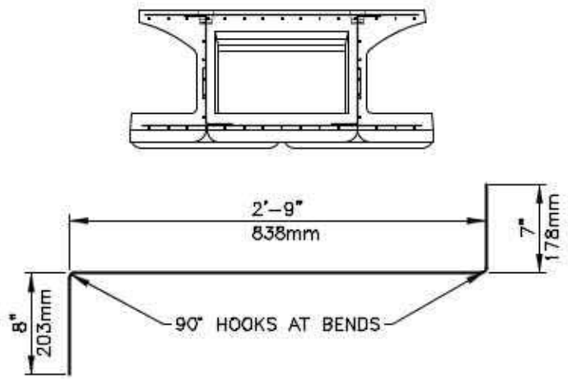

BENT WEB MESH – PLAN VIEW

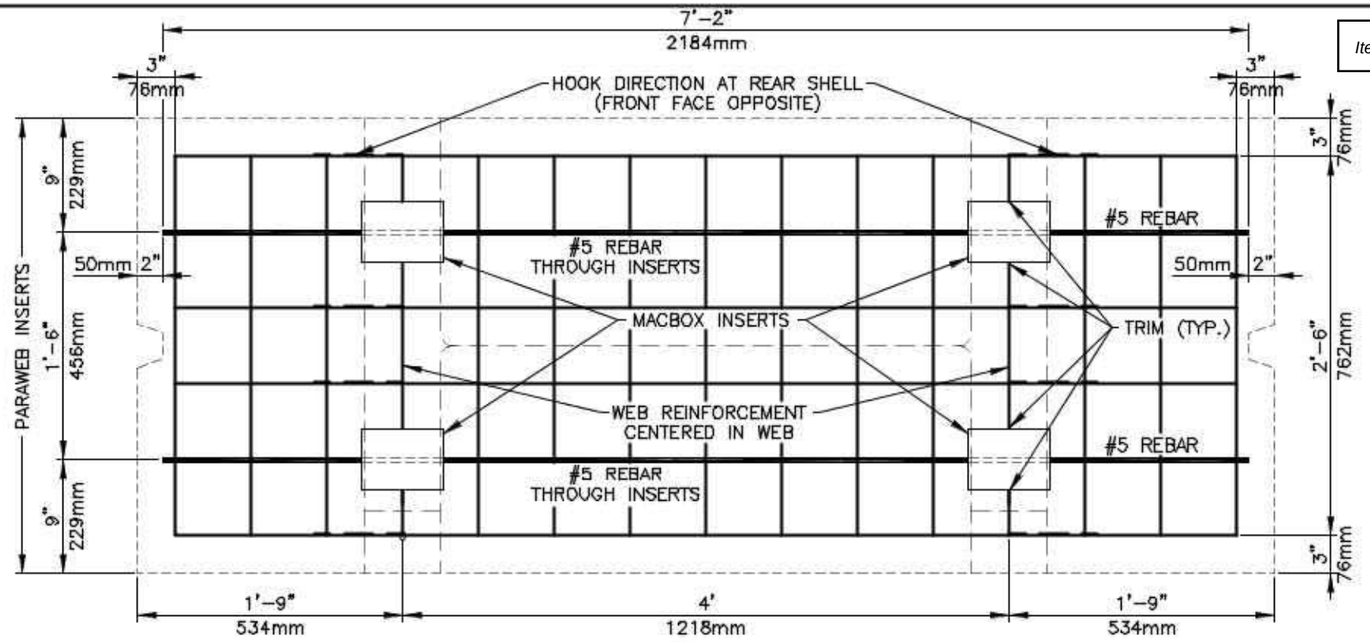

REAR SHELL MESH w/PARAWEB INSERTS

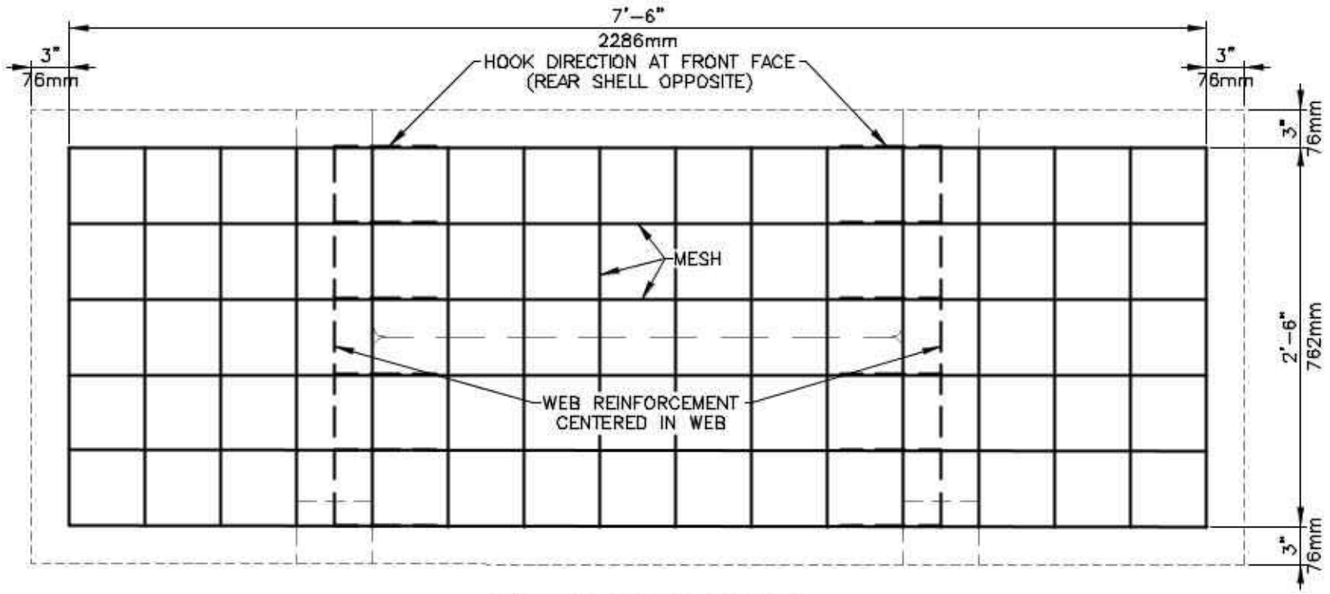

FRONT FACE MESH

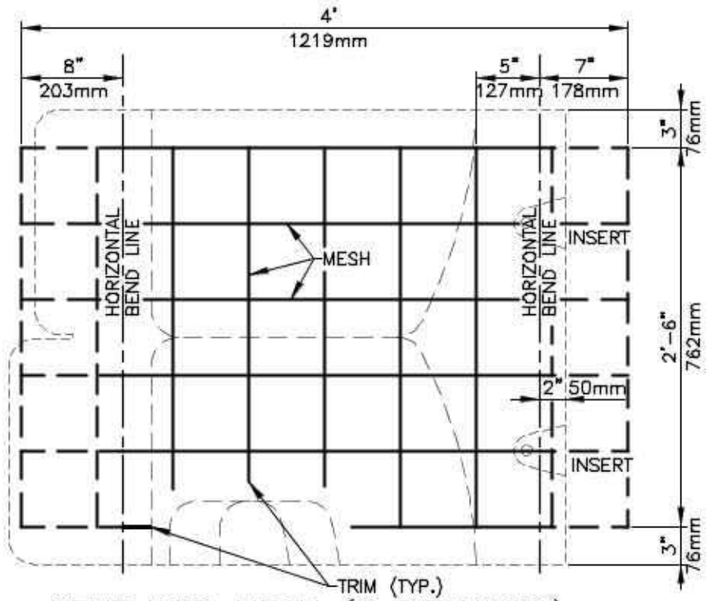

BENT WEB MESH (2 REQUIRED)

24SF HEAVY DUTY PARAWEB UNIT (24SF-HDP) – MESH OPTION

NOT TO SCALE

DISCLAIMER:
These typical details are preliminary and conceptual in nature. They are provided for general information purposes only. Anyone making use of these details and related information does so at their own risk and assumes all liability for such use. Site specific design should be performed by a licensed Professional Engineer who is familiar with the actual site conditions, materials, and local practices.

Thiele Geotech, Inc. and Stone Strong LLC are the authors of these drawings and retain all common law, statutory, and other reserved rights including the copyright. Limited license is granted to copy, reproduce, or modify the details to prepare construction drawings for Stone Strong retaining walls. Thiele Geotech, Inc. and Stone Strong LLC make no warranties, either expressed or implied, of merchantability or fitness for any particular purpose, and accept no responsibility for the accuracy, suitability, or completeness of information contained herein.

STONE STRONG SYSTEMS®
www.stonestrong.com

PROJECT
REINFORCING DETAILS
STONE STRONG SYSTEMS

DATE: 12/16/19 | FILE: 09_24SF-HDP Mesh

NOTES:
1. ALL STEEL SHALL BE #4 BARS, GRADE 60, U.N.O.
2. ALL #5 BARS SHALL BE GRADE 60.
3. USE IN PARAWEB MSE WALL BETWEEN 36 AND 51 FEET BELOW TOP OF WALL

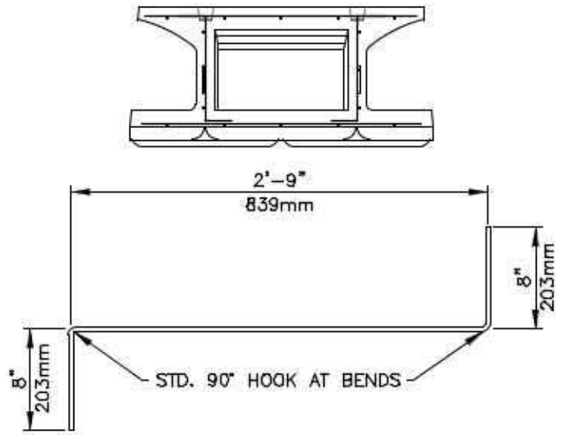

BENT WEB REBAR – PLAN VIEW

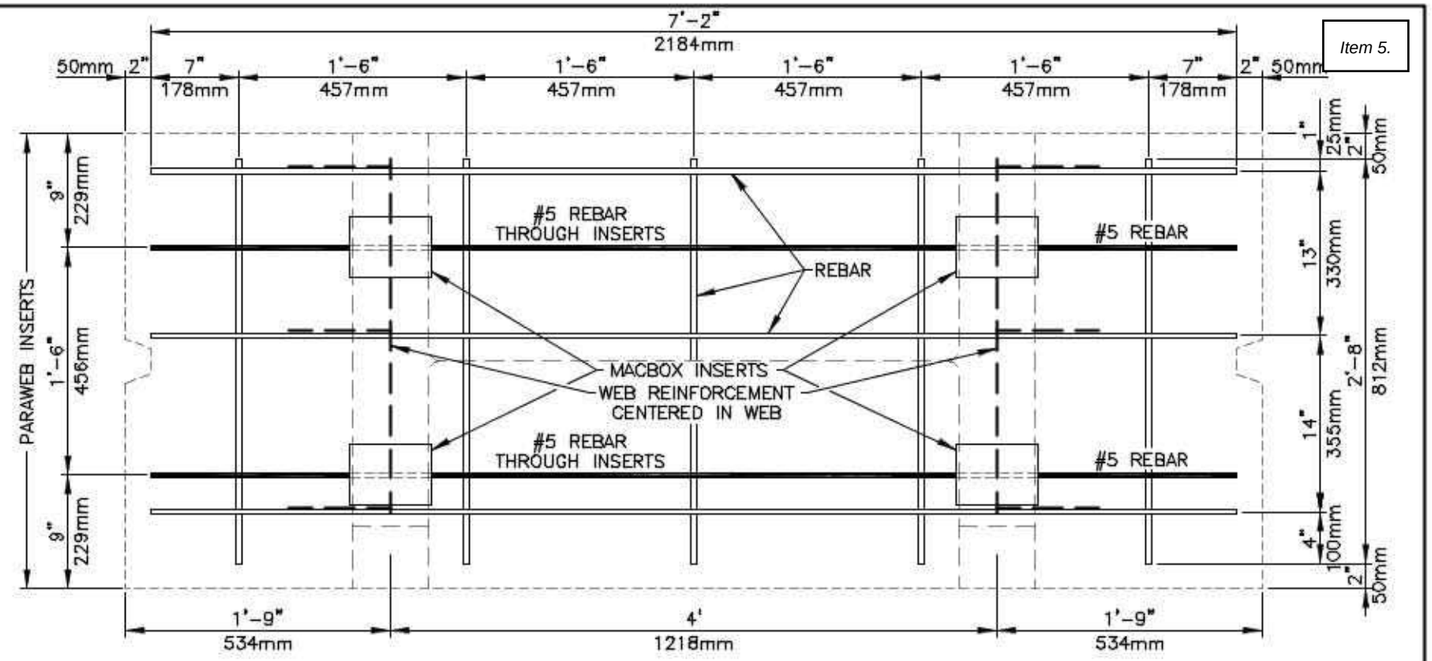

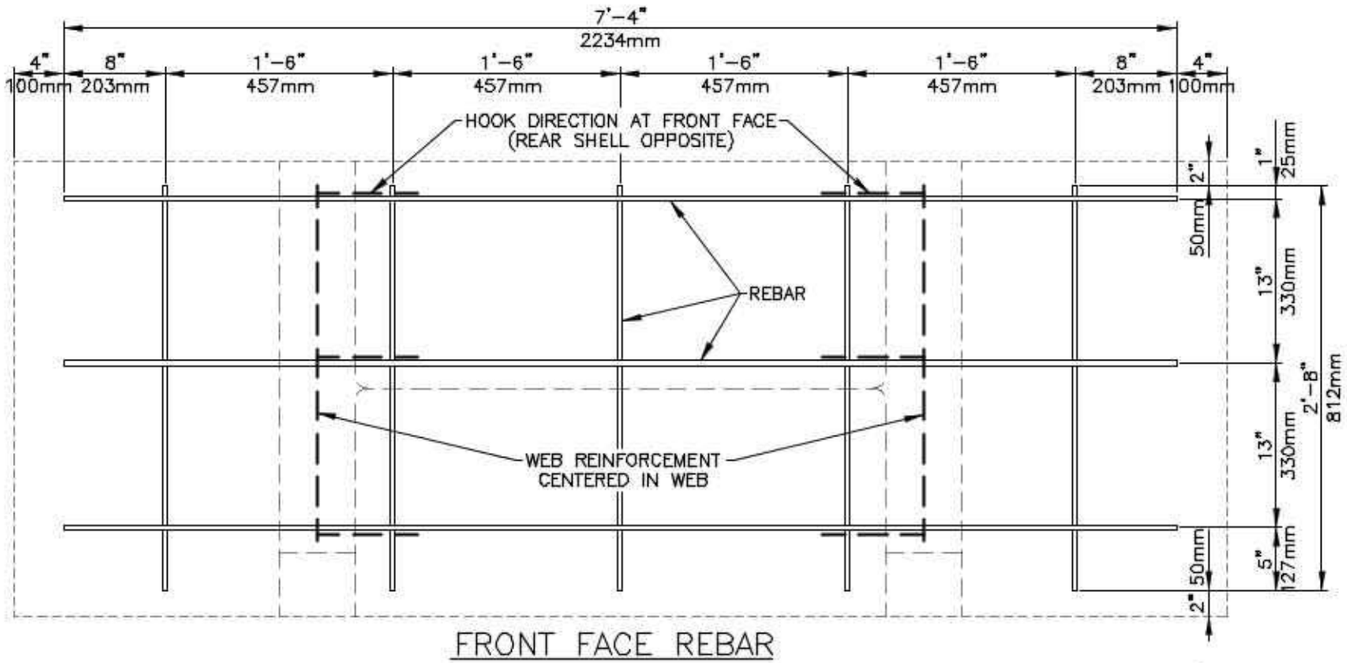

FRONT FACE REBAR

REAR SHELL REBAR

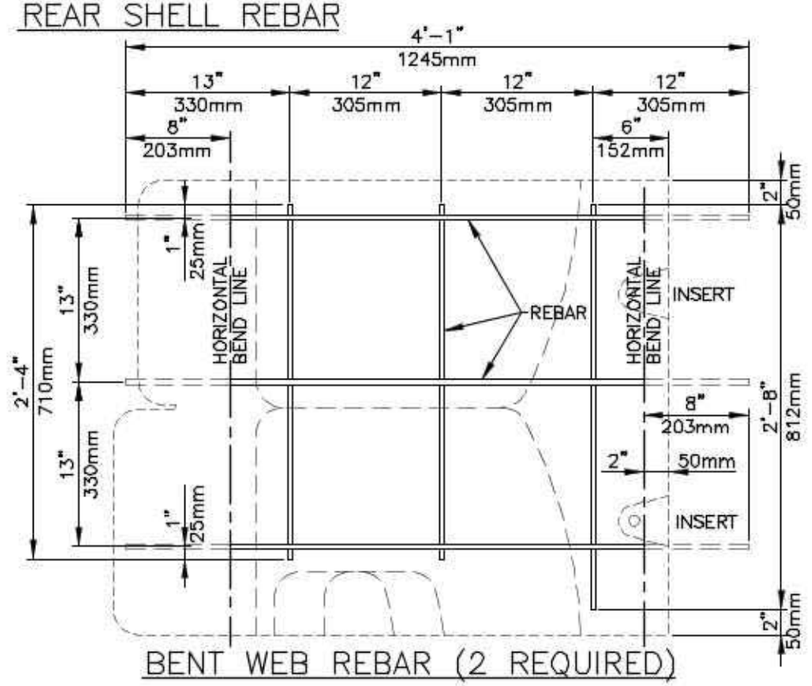

BENT WEB REBAR (2 REQUIRED)

24SF HEAVY DUTY PARAWEB UNIT (24SF-HDP) – REBAR OPTION

NOT TO SCALE

DISCLAIMER:
These typical details are preliminary and conceptual in nature. They are provided for general information purposes only. Anyone making use of these details and related information does so at their own risk and assumes all liability for such use. Site specific design should be performed by a licensed Professional Engineer who is familiar with the actual site conditions, materials, and local practices.

Thiele Geotech, Inc. and Stone Strong LLC are the authors of these drawings and retain all common law, statutory, and other reserved rights including the copyright. Limited license is granted to copy, reproduce, or modify the details to prepare construction drawings for Stone Strong retaining walls. Thiele Geotech, Inc. and Stone Strong LLC make no warranties, either expressed or implied, of merchantability or fitness for any particular purpose, and accept no responsibility for the accuracy, suitability, or completeness of information contained herein.

STONE STRONG SYSTEMS®
www.stonestrong.com

PROJECT
REINFORCING DETAILS
STONE STRONG SYSTEMS

DATE: 12/16/19 | FILE: 10_24SF-HDP Rebar

NOTES:

1. ALL #5 BARS SHALL BE GRADE 60.
2. USE IN PARAWEB MSE WALL IN TOP 12 FEET.
3. MAY ALSO BE USED IN BOTTOM COURSE ONLY OF PARAWEB MSE WALL USING 24SF UNITS ABOVE.

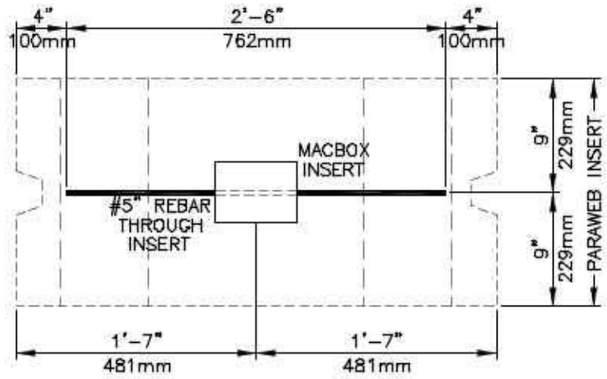

REAR SHELL

FRONT FACE

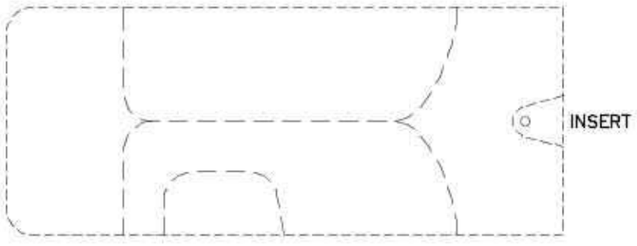

SIDE ELEVATION

6SF PARAWEB UNIT (6SF-P)

NOT TO SCALE

DISCLAIMER:
These typical details are preliminary and conceptual in nature. They are provided for general information purposes only. Anyone making use of these details and related information does so at their own risk and assumes all liability for such use. Site specific design should be performed by a licensed Professional Engineer who is familiar with the actual site conditions, materials, and local practices.

Thiele Geotech, Inc. and Stone Strong LLC are the authors of these drawings and retain all common law, statutory, and other reserved rights including the copyright. Limited license is granted to copy, reproduce, or modify the details to prepare construction drawings for Stone Strong retaining walls. Thiele Geotech, Inc. and Stone Strong LLC make no warranties, either expressed or implied, of merchantability or fitness for any particular purpose, and accept no responsibility for the accuracy, suitability, or completeness of information contained herein.

STONE STRONG SYSTEMS

www.stonestrong.com

PROJECT

REINFORCING DETAILS

STONE STRONG SYSTEMS

797

DATE: 12/16/19 | FILE: 11_6SF-P

NOTES:

1. ALL MESH SHALL BE W8xW8-6x6 WWF PER ASTM A185/A497/A1064, GRADE 65 U.N.O.
2. ALL #5 BARS SHALL BE GRADE 60.
3. USE IN PARAWEB MSE WALL BETWEEN 12 AND 51 FEET BELOW TOP OF WALL.

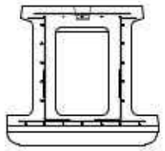

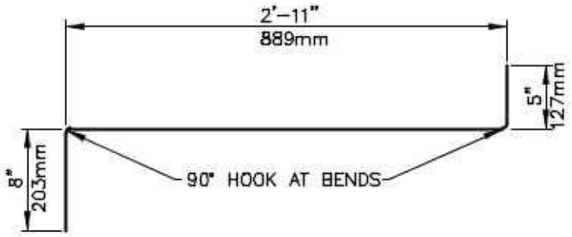

BENT WEB MESH - PLAN VIEW

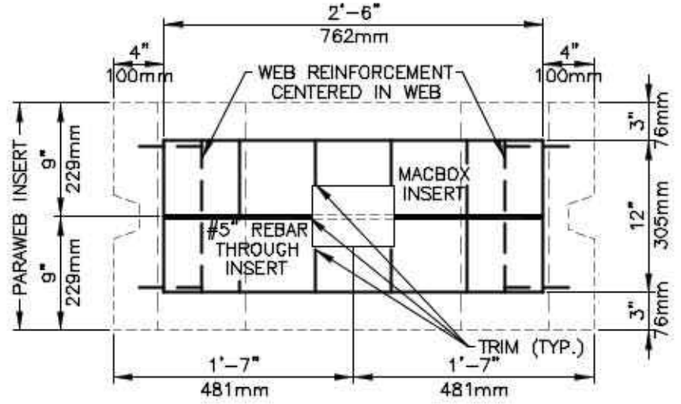

REAR SHELL MESH

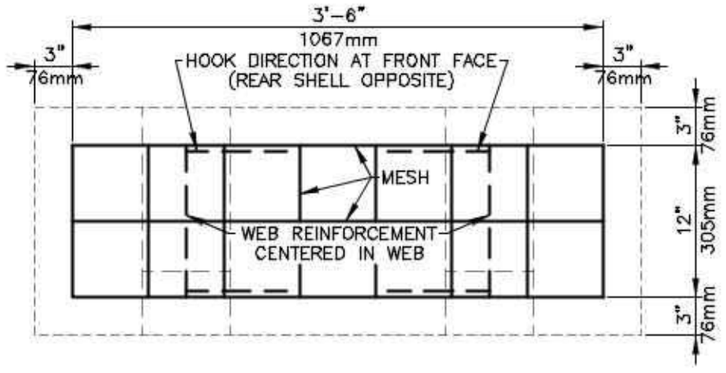

FRONT FACE MESH

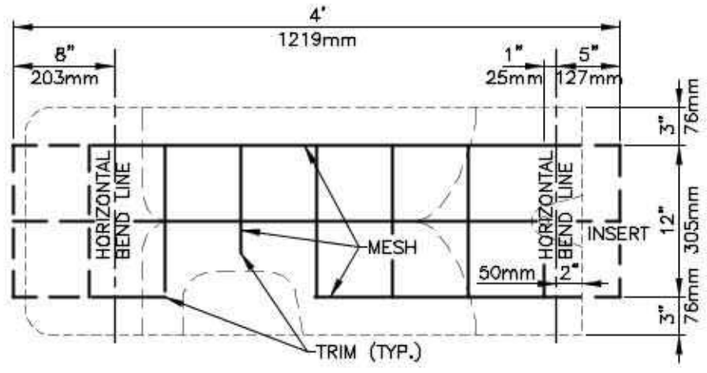

BENT WEB MESH (2 REQUIRED)

6 SF HEAVY DUTY PARAWEB UNIT (6SF-HDP) - MESH OPTION

NOT TO SCALE

DISCLAIMER:

These typical details are preliminary and conceptual in nature. They are provided for general information purposes only. Anyone making use of these details and related information does so at their own risk and assumes all liability for such use. Site specific design should be performed by a licensed Professional Engineer who is familiar with the actual site conditions, materials, and local practices.

Thiele Geotech, Inc. and Stone Strong LLC are the authors of these drawings and retain all common law, statutory, and other reserved rights including the copyright. Limited license is granted to copy, reproduce, or modify the details to prepare construction drawings for Stone Strong retaining walls. Thiele Geotech, Inc. and Stone Strong LLC make no warranties, either expressed or implied, of merchantability or fitness for any particular purpose, and accept no responsibility for the accuracy, suitability, or completeness of information contained herein.

STONE STRONG SYSTEMS

www.stonestrong.com

PROJECT

REINFORCING DETAILS

STONE STRONG SYSTEMS

798

DATE: 12/16/19 | FILE: 12_6SF-HDP Mesh

NOTES:

1. ALL STEEL SHALL BE #4 BARS, GRADE 60, U.N.O.
2. ALL #5 BARS SHALL BE GRADE 60.
3. USE IN PARAWEB MSE WALL BETWEEN 12 AND 51 FEET BELOW TOP OF WALL

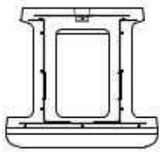

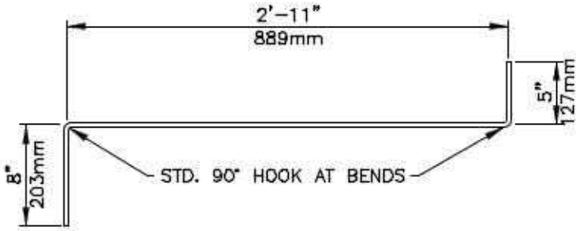

BENT WEB REBAR – PLAN VIEW

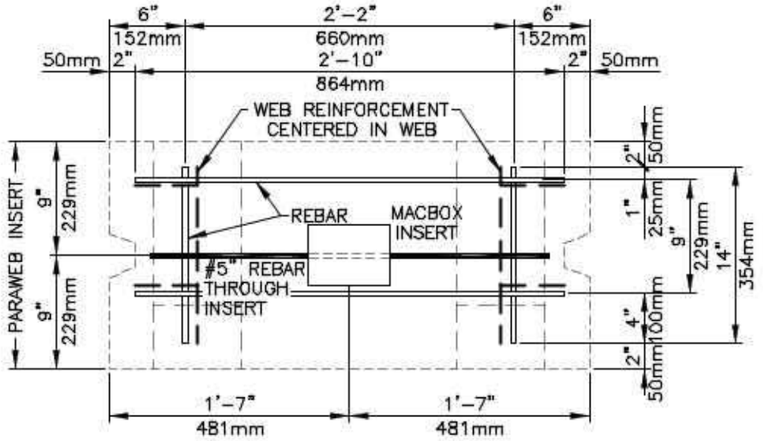

REAR SHELL REBAR

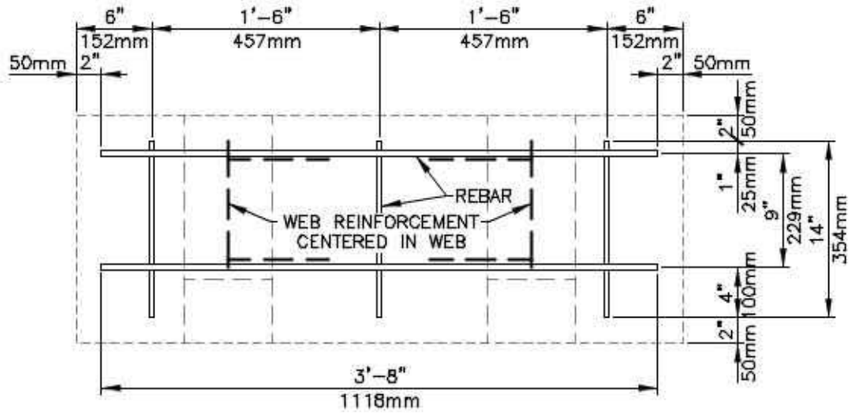

FRONT FACE REBAR

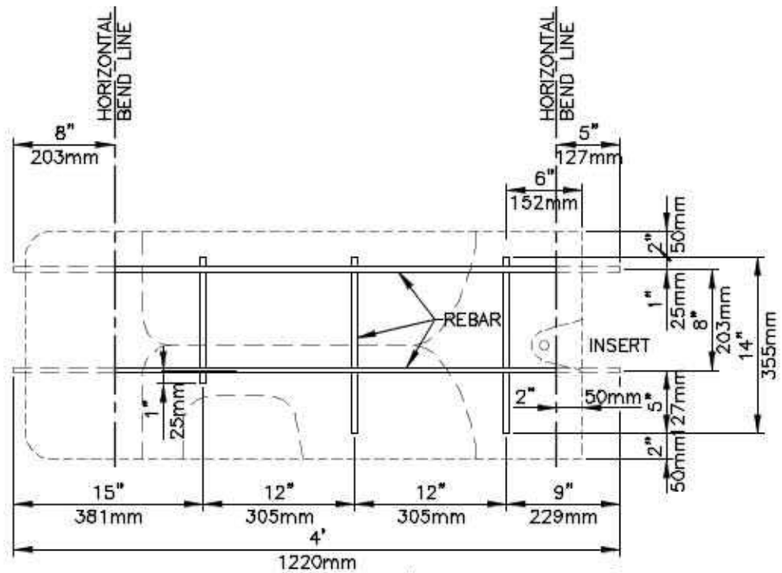

BENT WEB REBAR (2 REQUIRED)

6 SF HEAVY DUTY PARAWEB UNIT (6SF–HDP) – REBAR OPTION

NOT TO SCALE

DISCLAIMER:
These typical details are preliminary and conceptual in nature. They are provided for general information purposes only. Anyone making use of these details and related information does so at their own risk and assumes all liability for such use. Site specific design should be performed by a licensed Professional Engineer who is familiar with the actual site conditions, materials, and local practices.

Thiele Geotech, Inc. and Stone Strong LLC are the authors of these drawings and retain all common law, statutory, and other reserved rights including the copyright. Limited license is granted to copy, reproduce, or modify the details to prepare construction drawings for Stone Strong retaining walls. Thiele Geotech, Inc. and Stone Strong LLC make no warranties, either expressed or implied, of merchantability or fitness for any particular purpose, and accept no responsibility for the accuracy, suitability, or completeness of information contained herein.

STONE STRONG SYSTEMS®

www.stonestrong.com

PROJECT

REINFORCING DETAILS

STONE STRONG SYSTEMS

DATE: 7/22/19 | FILE: 13_6SF-HDP Rebar

NOTES:
1. ALL #5 BARS SHALL BE GRADE 60.
2. USE IN PARAWEB MSE WALL IN TOP 12 FEET ONLY.

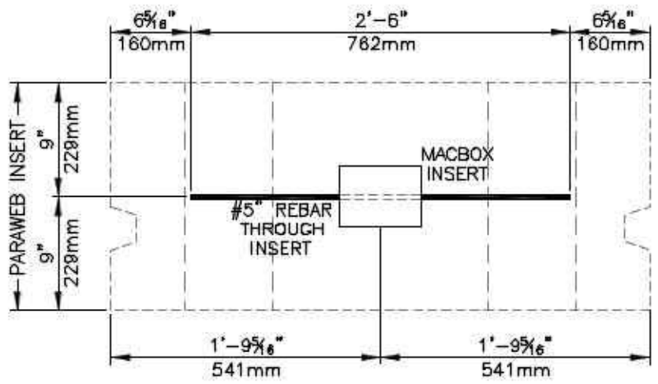

REAR SHELL

FRONT FACE

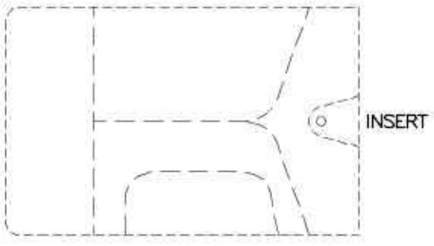

SIDE ELEVATION

6-28 PARAWEB UNIT (6-28-P)

NOT TO SCALE

DISCLAIMER:
These typical details are preliminary and conceptual in nature. They are provided for general information purposes only. Anyone making use of these details and related information does so at their own risk and assumes all liability for such use. Site specific design should be performed by a licensed Professional Engineer who is familiar with the actual site conditions, materials, and local practices.

Thiele Geotech, Inc. and Stone Strong LLC are the authors of these drawings and retain all common law, statutory, and other reserved rights including the copyright. Limited license is granted to copy, reproduce, or modify the details to prepare construction drawings for Stone Strong retaining walls. Thiele Geotech, Inc. and Stone Strong LLC make no warranties, either expressed or implied, of merchantability or fitness for any particular purpose, and accept no responsibility for the accuracy, suitability, or completeness of information contained herein.

STONE STRONG SYSTEMS
www.stonestrong.com

PROJECT
REINFORCING DETAILS
STONE STRONG SYSTEMS
800

DATE: 12/16/19 | FILE: 14_6-28-P

NOTES:

1. ALL MESH SHALL BE W8xW8–6x6 WWF PER ASTM A185/A497/A1064, GRADE 65 U.N.O.
2. ALL #5 BARS SHALL BE GRADE 60.
3. USE IN PARAWEB MSE WALL BETWEEN 12 AND 51 FEET BELOW TOP OF WALL.

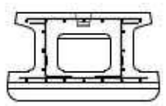

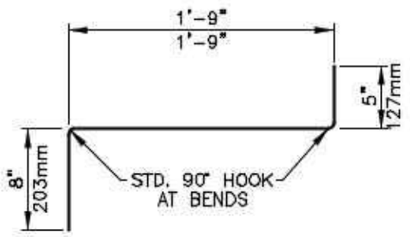

BENT WEB MESH – PLAN VIEW

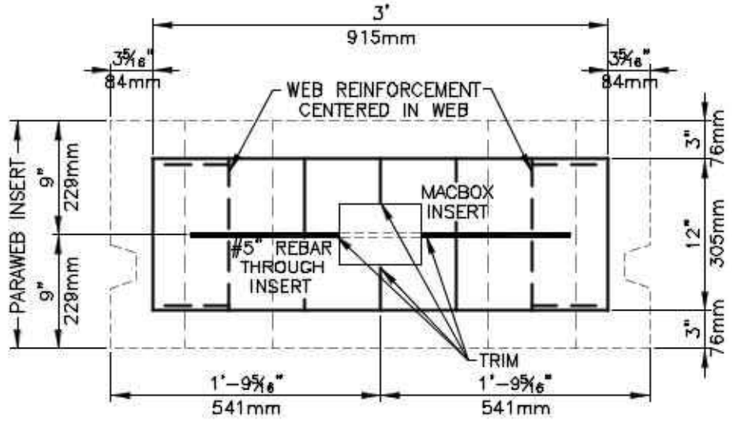

REAR SHELL MESH

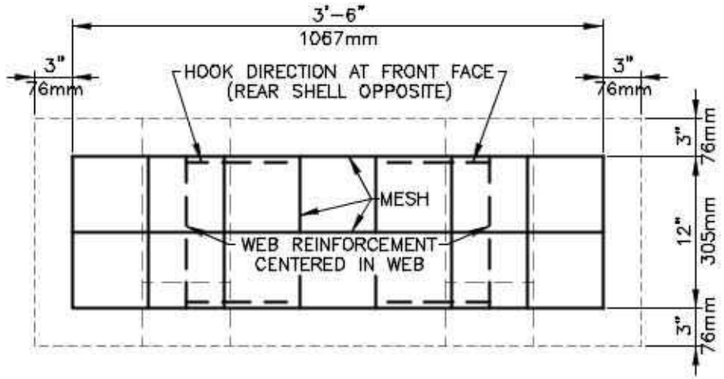

FRONT FACE MESH

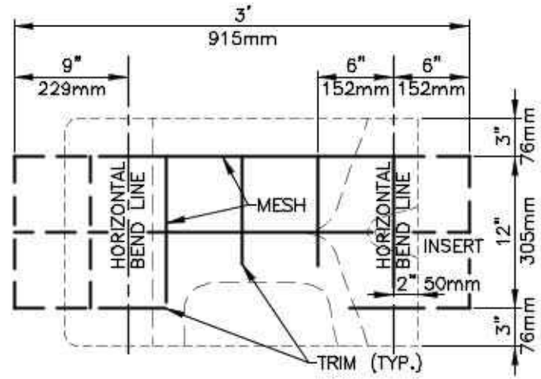

BENT WEB MESH (2 REQUIRED)

6–28 HEAVY DUTY PARAWEB UNIT (6–28–HDP) – MESH OPTION

NOT TO SCALE

DISCLAIMER:
These typical details are preliminary and conceptual in nature. They are provided for general information purposes only. Anyone making use of these details and related information does so at their own risk and assumes all liability for such use. Site specific design should be performed by a licensed Professional Engineer who is familiar with the actual site conditions, materials, and local practices.

Thiele Geotech, Inc. and Stone Strong LLC are the authors of these drawings and retain all common law, statutory, and other reserved rights including the copyright. Limited license is granted to copy, reproduce, or modify the details to prepare construction drawings for Stone Strong retaining walls. Thiele Geotech, Inc. and Stone Strong LLC make no warranties, either expressed or implied, of merchantability or fitness for any particular purpose, and accept no responsibility for the accuracy, suitability, or completeness of information contained herein.

STONE STRONG SYSTEMS®
www.stonestrong.com

PROJECT
REINFORCING DETAILS
STONE STRONG SYSTEMS

DATE: 12/16/19 | FILE: 15_6-28-HDP Mesh

NOTES:

1. ALL STEEL SHALL BE #4 BARS, GRADE 60, U.N.O.
2. ALL #5 BARS SHALL BE GRADE 60.
3. USE IN PARAWEB MSE WALL BETWEEN 12 AND 51 FEET BELOW TOP OF WALL.

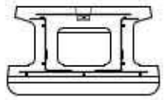

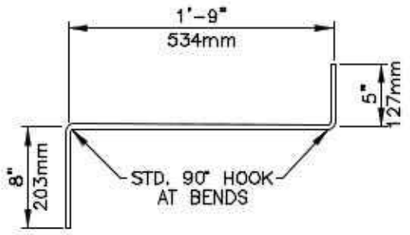

BENT WEB REBAR – PLAN VIEW

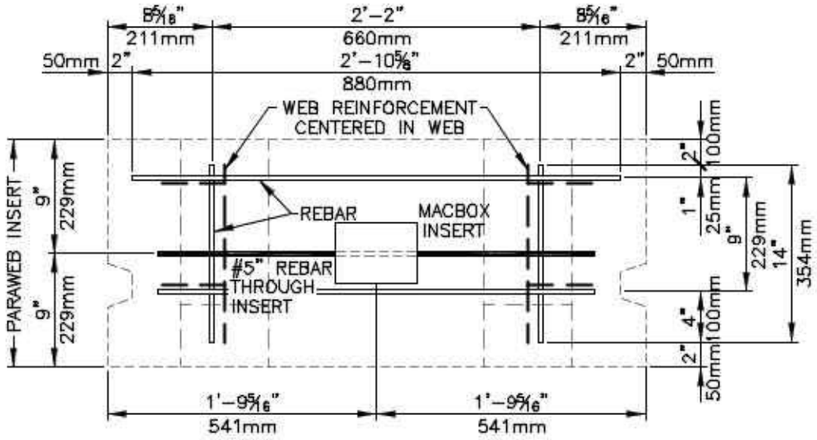

REAR SHELL REBAR

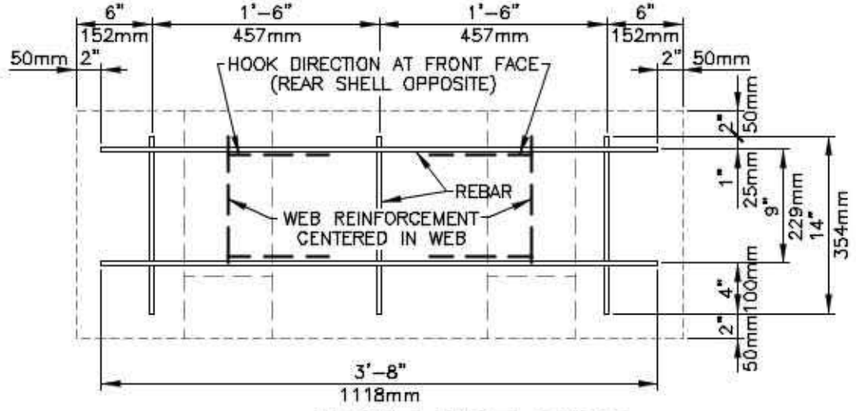

FRONT FACE REBAR

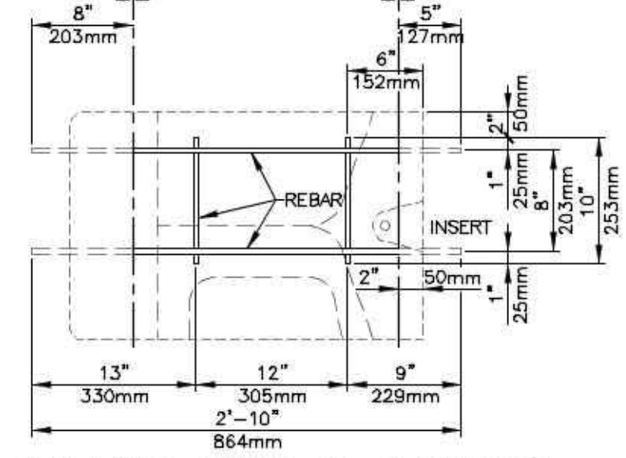

BENT WEB REBAR (2 REQUIRED)

6–28 HEAVY DUTY PARAWEB UNIT (6–28–HDP) – REBAR OPTION

NOT TO SCALE

DISCLAIMER:

These typical details are preliminary and conceptual in nature. They are provided for general information purposes only. Anyone making use of these details and related information does so at their own risk and assumes all liability for such use. Site specific design should be performed by a licensed Professional Engineer who is familiar with the actual site conditions, materials, and local practices.

Thiele Geotech, Inc. and Stone Strong LLC are the authors of these drawings and retain all common law, statutory, and other reserved rights including the copyright. Limited license is granted to copy, reproduce, or modify the details to prepare construction drawings for Stone Strong retaining walls. Thiele Geotech, Inc. and Stone Strong LLC make no warranties, either expressed or implied, of merchantability or fitness for any particular purpose, and accept no responsibility for the accuracy, suitability, or completeness of information contained herein.

STONE STRONG SYSTEMS®

www.stonestrong.com

PROJECT

REINFORCING DETAILS

STONE STRONG SYSTEMS

802

DATE: 12/16/19 | FILE: 16_6-28-HDP Rebar

December 3, 2020

Mail To:

Mr. John Gran
Stone Strong LLC
13460 Chandler Road, Suite 100
Omaha, NE 68138

email: jgran@stonestrong.com
email: dthiele@thielegeotech.com

Bill To:

Sara Gran
Stone Strong LLC
13460 Chandler Road, Suite 100
Omaha, NE 68138

sgran@stonestrong.com

Dear Mr. Gran:

Thank you for consulting TRI/Environmental, Inc. (TRI) for your geosynthetics testing needs.
TRI is pleased to submit this final report of the laboratory testing for the sample(s) listed below.

TRI Job Reference Number: 60553

Material(s) Tested: One, ParaWeb 2D-50

Test(s) Requested: Wide Width Tensile (ASTM D6637, Method B)

Test Results:

If you have any questions or require any additional information, please call us at 1-800-880-8378

Sincerely,

Jarrett A. Nelson
Technical Director
Geosynthetic Services Division

The testing herein is based upon accepted industry practice as well as the test method listed. Test results reported herein do not apply to samples other than those tested. TRI neither accepts responsibility for nor makes claim as to the final use and purpose of the material. TRI observes and maintains client confidentiality. TRI limits reproduction of this report, except in full, without prior approval of TRI.

LABORATORY TEST RESULTS
TRI Client: Stone Strong LLC

Material: ParaWeb 2D-50
Sample ID: ParaWeb 2D-50
TRI Log #: 60553

PARAMETER	TEST REPLICATE NUMBER					MEAN	STD. DEV.
	1	2	3	4	5		
Wide Width Tensile (ASTM D6637, Method B)							
Ultimate Strength (lbs)	11200	10958	10739	11258	11202	**11071**	219
Ultimate Strength (kN)	49.8	48.8	47.8	50.1	49.8	**49.3**	1.0
Strength @ 2% Strain (lbs)	1940	1947	1900	1966	1907	**1932**	28
Strength @ 2% Strain (kN)	8.63	8.66	8.46	8.75	8.49	**8.60**	0.12
Strength @ 5% Strain (lbs)	3569	3779	3672	3748	3710	**3696**	81
Strength @ 5% Strain (kN)	15.9	16.8	16.3	16.7	16.5	**16.4**	0.4
Strength @ 10% Strain (lbs)	9732	9979	9864	9773	9765	**9823**	100
Strength @ 10% Strain (kN)	43.3	44.4	43.9	43.5	43.5	**43.7**	0.4
Break Elongation (%)	12.6	11.7	11.8	12.5	12.7	**12.3**	0.5
Wide Width Tensile (ASTM D6637, Method B) - modified by wrapping strap around 1" steel rod							
Ultimate Strength (lbs)	21949	22038	20874			**21620**	648
Ultimate Strength (kN)	97.7	98.1	92.9			**96.2**	2.9

The testing herein is based upon accepted industry practice as well as the test method listed. Test results reported herein do not apply to samples other than those tested. TRI neither accepts responsibility for nor makes claim as to the final use and purpose of the material. TRI observes and maintains client confidentiality. TRI limits reproduction of this report, except in full, without prior approval of TRI.

1.2.7 REINFORCEMENT PULLOUT PROPERTIES

Pullout Test Data Summary Plot
Paraweb Pullout Tests

© Stone Strong Systems

PULLOUT TEST DATA SUMMARY

30kN to 100 kN Paraweb straps 10/29/20
tested in silty sand, concrete sand, and graded aggregae base materials

see SGI test reports for complete test procedures and data

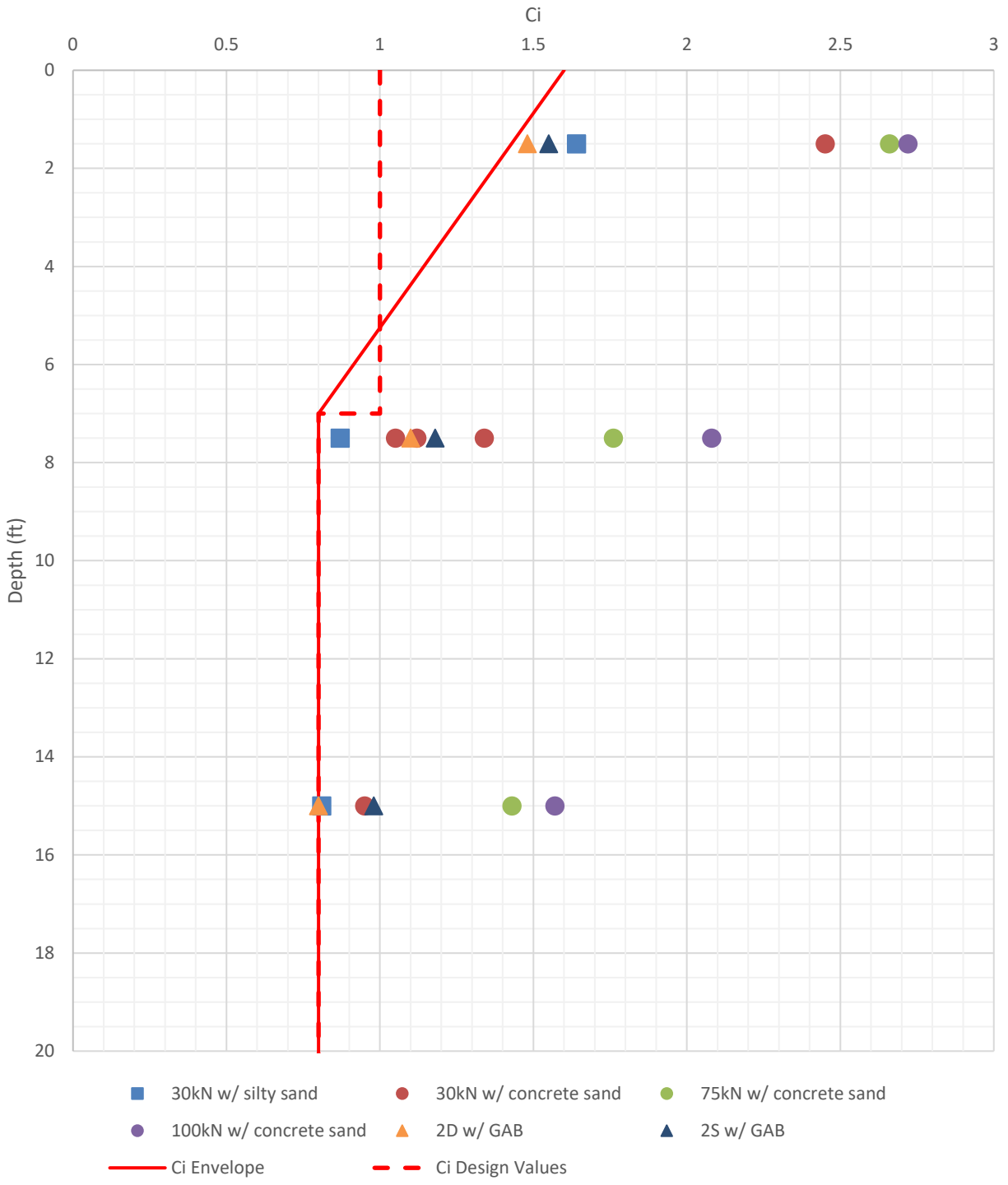

© STONE STRONG SYSTEMS

SGI TESTING SERVICES
A Georgia Limited Liability Company

26 November 2008

Mr. Robert Lozano
Linear Composites, Ltd
7830 Laurelton Drive
Chattanooga, TN 37421-1953

Subject: Laboratory Test Results Transmittal
Pullout Testing
ParaWeb Polymeric Strips within Graded Aggregate Base Material

Dear Mr. Lozano,

SGI Testing Services, LLC (SGI) is pleased to present the attached test results for the above-mentioned testing program. The note section below addresses sample preparation, sample disposal and a disclosure statement.

SGI appreciates the opportunity to provide laboratory testing services to Linear Composites, Ltd. Should you have any questions regarding the attached document, or if you require additional information, please do not hesitate to contact the undersigned.

Sincerely,

Zehong Yuan, Ph.D., P.E.
Laboratory Manager

Attachment

Notes:
(1) Unless otherwise noted in the test results the sample(s)/specimen(s) were prepared in accordance with the applicable test standards or generally accepted sampling procedures.
(2) Contaminated/chemical samples and all related laboratory generated waste (i.e., test liquids, PPE, absorbents, etc.) will be returned to the client or designated representative(s), at the client's cost, within 60 days following the completion of the testing program, unless special arrangements for proper disposal are made with SGI$_{sm}$.
(3) Materials that are not contaminated will be discarded after test specimens and archived specimens are obtained. All of the tested and archived specimens will be discarded 30 days after the completion of testing, unless long-term storage arrangements are specifically made with the laboratory.
(4) The reported results apply only to the materials and test conditions used in the laboratory testing program. The results do not necessarily apply to other materials or test conditions. The test results should not be used in engineering analysis unless the test conditions model the anticipated field conditions. The testing was performed in accordance with general engineering testing standards and requirements. The reported results are submitted for the exclusive use of the client to whom they are addressed.

SGI7018.REPORT.08.04

Mail To: SGI Testing Services, LLC
P.O. Box 2427
Lilburn, Georgia 30048-2427

Web Site: www.interactionspecialists.com

Facility Location
4405 International Boulevard
Suite B-117
Norcross, Georgia 30093

Phone: 770.931.8222 Fax: 770.931.8240

LINEAR COMPOSITES, LTD
POLYESTER STRIP PULLOUT TESTING (ASTM D 6706 MODIFIED)

TEST SERIES NO. 1: 30 kN Paraweb (Style 2D) in machine direction within graded aggregate base (GAB) material compacted to approximately 95% of maximum modified Proctor density at optimum moisture content

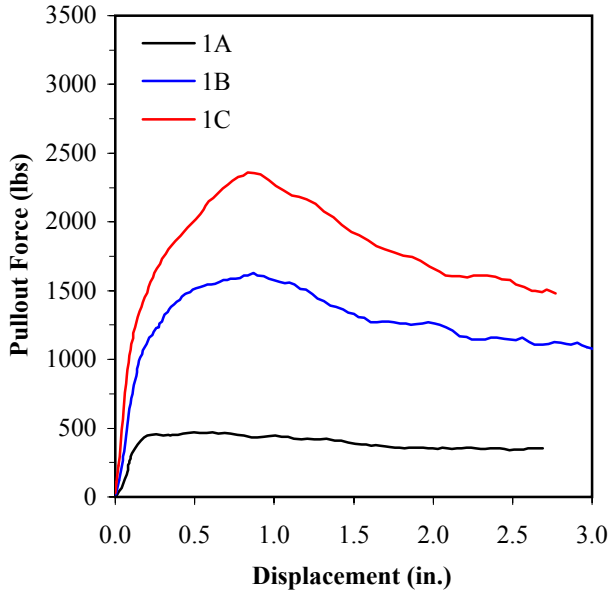

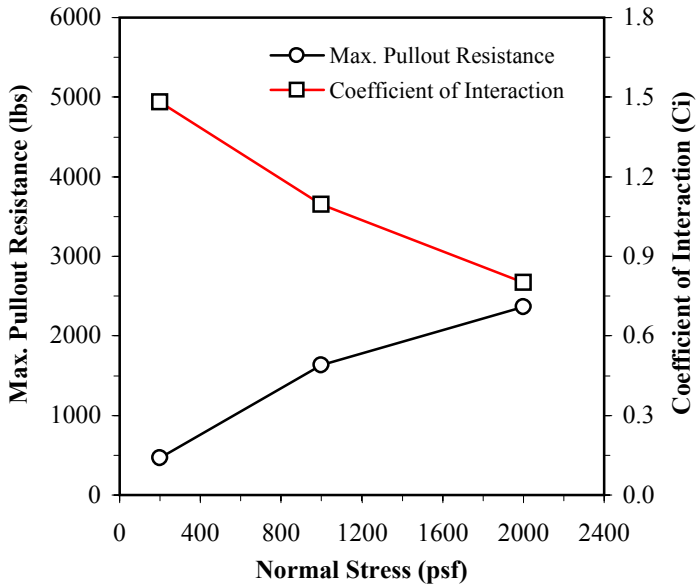

Test No.	Test Specimen Width W (in.)	Embedment Length L (in.)	Normal Stress σ (psf)	Pullout Rate (in./min)	Soil Compaction: Initial Dry Unit Weight (pcf)	Soil Compaction: Initial Moisture Content (%)	Residual Soil Shear Strength[1]: ϕ (degree)	Residual Soil Shear Strength[1]: c (psf)	Max. Pullout Resistance P (lbs)	Coefficient of Interaction[2] C_i (-)	Failure Mode[3]
1A	3.3	36.0	200	0.04	136.0	5.5	42	15	470	1.48	Pullout
1B	3.3	36.0	1000	0.04	135.5	4.3	42	15	1629	1.10	Pullout
1C	3.3	36.0	2000	0.04	134.1	5.9	42	15	2363	0.80	Pullout

NOTES:

(1) The residual shear strength parameters of the soil material were obtained from a series of direct shear tests.

(2) $C_i = (P/2.W.L)/(\sigma.\tan\phi + c)$

(3) Pullout failure was indicated by a minimum displacement of 0.5 in measured at the tell-tail wire attached to the rear end of the strip.

(4) Paraweb specimen trimmed by hot knife.

DATE REPORTED: 6/1/2008

SGI TESTING SERVICES, LLC

FIGURE NO.	C-1
PROJECT NO.	SGI7018
DOCUMENT NO.	SGI08022
FILE NO.	

P7018-21R.pullout.xls

LINEAR COMPOSITES, LTD
POLYESTER STRIP PULLOUT TESTING (ASTM D 6706 MODIFIED)

TEST SERIES NO. 2: 30 kN Paraweb (Style 2S) in machine direction within graded aggregate base (GAB) material compacted to approximately 95% of maximum modified Proctor density at optimum moisture content

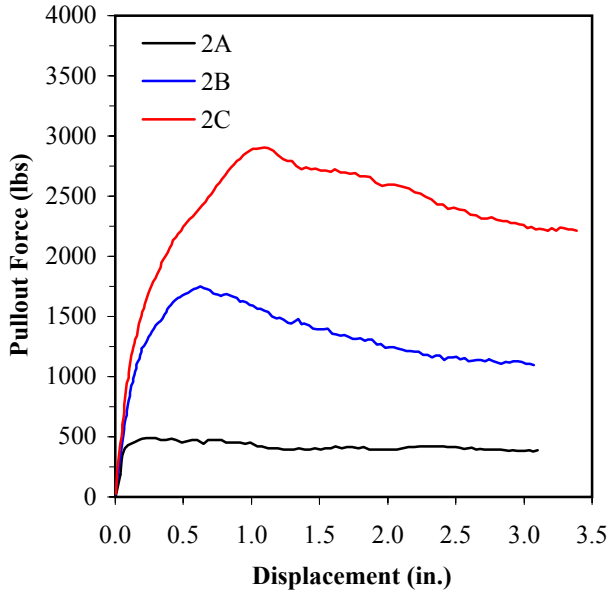

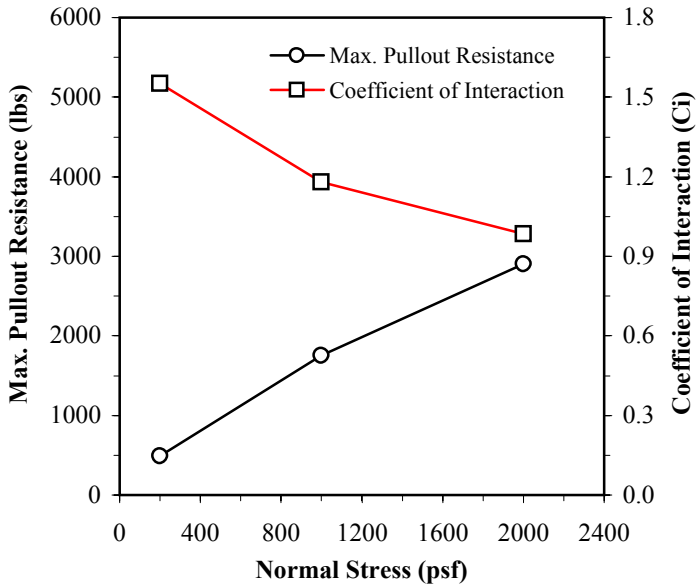

Test No.	Test Specimen Width W (in.)	Embedment Length L (in.)	Normal Stress σ (psf)	Pullout Rate (in./min)	Soil Compaction: Initial Dry Unit Weight (pcf)	Soil Compaction: Initial Moisture Content (%)	Residual Soil Shear Strength[1]: ϕ (degree)	Residual Soil Shear Strength[1]: c (psf)	Max. Pullout Resistance P (lbs)	Coefficient of Interaction[2] C_i (-)	Failure Mode[3]
2A	3.3	36.0	200	0.04	133.9	5.2	42	15	492	1.55	Pullout
2B	3.3	36.0	1000	0.04	135.8	4.9	42	15	1756	1.18	Pullout
2C	3.3	36.0	2000	0.04	136.2	4.7	42	15	2906	0.98	Pullout

NOTES:

(1) The residual shear strength parameters of the soil material were obtained from a series of direct shear tests.

(2) $C_i = (P/2.W.L)/(\sigma.\tan\phi + c)$

(3) Pullout failure was indicated by a minimum displacement of 0.5 in measured at the tell-tail wire attached to the rear end of the strip.

(4) Paraweb specimen trimmed by hot knife.

DATE REPORTED: 6/1/2008

SGI TESTING SERVICES, LLC

FIGURE NO.	C-2
PROJECT NO.	SGI7018
DOCUMENT NO.	SGI08022
FILE NO.	

P7018-22R.pullout.xls

LINEAR COMPOSITES, LTD
POLYESTER STRIP PULLOUT TESTING (ASTM D 6706 MODIFIED)

TEST SERIES NO. 3: 30 kN Paraweb (Style 2E+) in machine direction within graded aggregate base (GAB) material compacted to approximately 95% of maximum modified Proctor density at optimum moisture content

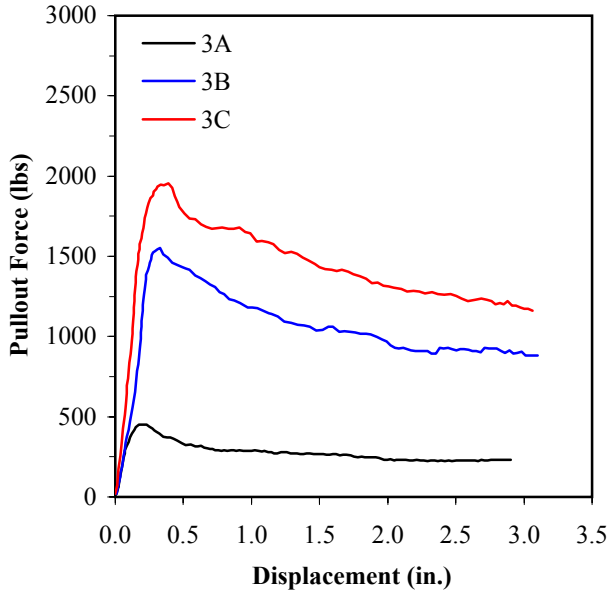

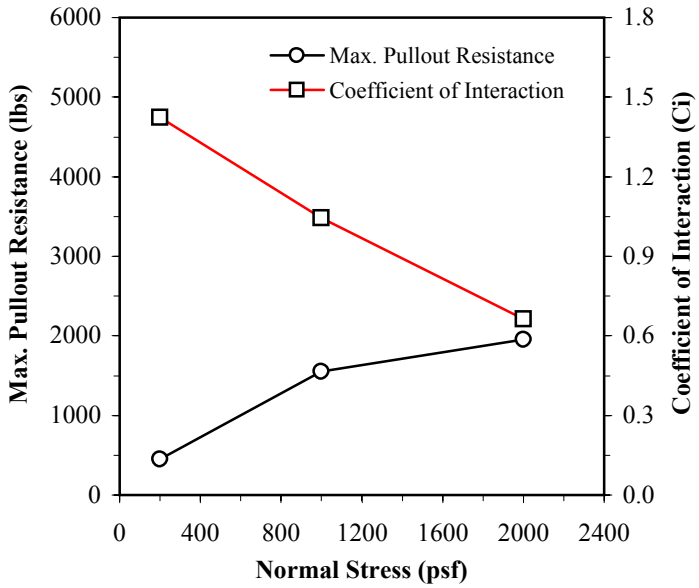

Test No.	Test Specimen Width W (in.)	Embedment Length L (in.)	Normal Stress σ (psf)	Pullout Rate (in./min)	Soil Compaction		Residual Soil Shear Strength[1]		Max. Pullout Resistance P (lbs)	Coefficient of Interaction[2] C_i (-)	Failure Mode[3]
					Initial Dry Unit Weight (pcf)	Initial Moisture Content (%)	ϕ (degree)	c (psf)			
3A	3.3	36.0	200	0.04	135.2	4.7	42	15	451	1.42	Pullout
3B	3.3	36.0	1000	0.04	133.6	5.6	42	15	1555	1.05	Pullout
3C	3.3	36.0	2000	0.04	136.4	5.0	42	15	1955	0.66	Pullout

NOTES:

(1) The residual shear strength parameters of the soil material were obtained from a series of direct shear tests.

(2) $C_i = (P/2.W.L)/(\sigma.\tan\phi + c)$

(3) Pullout failure was indicated by a minimum displacement of 0.5 in measured at the tell-tail wire attached to the rear end of the strip.

(4) Paraweb specimen trimmed by hot knife.

DATE REPORTED: 6/1/2008

SGI TESTING SERVICES, LLC

FIGURE NO.	C-3
PROJECT NO.	SGI7018
DOCUMENT NO.	SGI08022
FILE NO.	

P7018-23R.pullout.xls

SGI TESTING SERVICES
A Georgia Limited Liability Company

14 December 2008

Mr. Robert Lozano
Linear Composites, Ltd
7830 Laurelton Drive
Chattanooga, TN 37421-1953

Subject: Final Report
Pullout Testing
ParaWeb Polymeric Strips within Concrete Sand

Dear Mr. Lozano,

SGI Testing Services, LLC (SGI) is pleased to present the enclosed final report of the pullout testing program performed for Linear Composites, Ltd. The pullout tests were performed in accordance with the ASTM D 6706, "*Measuring Geosynthetic Pullout Resistance in Soil*". All of the pullout tests were conducted at SGI located in Norcross, Georgia.

SGI appreciates the opportunity to provide laboratory testing services to Linear Composites, Ltd. Should you have any questions regarding the enclosed report or if you require additional information, please do not hesitate to contact the undersigned.

Sincerely,

Zehong Yuan, Ph.D., P.E.
Laboratory Manager

Enclosure

SGI7018.REPORT.08.06.LTR

Mail To: SGI Testing Services, LLC
P.O. Box 2427
Lilburn, Georgia 30048-2427

Web Site: www.interactionspecialists.com

Facility Location
4405 International Boulevard
Suite B-117
Norcross, Georgia 30093

Phone: 770.931.8222 Fax: 770.931.8240

Prepared for:

Linear Composites, Ltd
7830 Laurelton Drive
Chattanooga, TN 37421-1953
USA

FINAL REPORT
PULLOUT TESTING

PARAWEB POLYMERIC STRIPS WITHIN CONCRETE SAND

Prepared by:

SGI TESTING SERVICES, LLC

4405 International Blvd., Suite B-117
Norcross, GA 30093

Project Number SGI7018

12 December 2008

CAVEAT

The reported results apply only to the materials and test conditions used in the laboratory testing program. The results do not necessarily apply to other materials or test conditions. The test results should not be used in engineering analysis unless the test conditions model the anticipated field conditions. The testing was performed in accordance with general engineering testing standards and requirements. This testing report is submitted for the exclusive use of the client to whom it is addressed.

©2008 SGI Testing Services

1. INTRODUCTION

SGI Testing Services, LLC (SGI) conducted a laboratory testing program to evaluate the pullout resistance of Paraweb polymeric strips within concrete sand. The sample preparation procedures and testing conditions were specified by Mr. Robert Lozano of Linear Composites, Ltd. to model anticipated field conditions. All of the pullout tests were conducted at SGI located in Norcross, Georgia.

2. TEST MATERIALS

Two types of materials were used in this testing program. Descriptions of these materials are given below:

- *Reinforcement*: ParaWeb 30kN, 75kN, and 100 kN polymeric strips.
- *Soil Material*: concrete sand manufactured by crushing granite rock. A particle size analysis, standard Proctor compaction, and direct shear testing were conducted on the concrete sand and the test results are presented in Appendix A.

The three ParaWeb polymeric strips were provided by Linear Composites. Bulk samples of the concrete sand were obtained by SGI from a local quarry.

3. PULLOUT TEST EQUIPMENT

The pullout testing device used in this testing program had plan dimensions of 0.6 m by 1.5 m (2 ft by 5 ft) and an overall depth of 300 mm (12 in.). Normal (vertical) stresses were applied to the testing specimen through six hydraulic cylinders and pullout (horizontal) loads were applied to the test specimen through two hydraulic cylinders as shown in Figures B-1 and B-2.

©2008 SGI Testing Services

4. TEST METHOD AND PROCEDURES

The pullout tests were performed in general accordance with the ASTM D 6706, "*Measuring Geosynthetic Pullout Resistance in Soil*", with appropriate modifications. The specific testing procedures used to conduct pullout testing are described in Appendix B.

5. PULLOUT TEST RESULTS

Three series of pullout tests were performed in this testing program. For each pullout test series, the test results are presented in a summary page in Appendix C. The summary page includes:

- Pullout force versus displacement figure;
- Pullout resistance versus normal stress figure; and
- A table that summarizes test conditions, maximum pullout resistance, coefficient of interaction (C_i), and failure modes.

The coefficient of interaction (C_i) was calculated using the equation as follows:

$$C_i = \frac{F}{2(L_e W)(\sigma_n \tan\phi + c)}$$

where:

F	=	maximum pullout load;
L_e	=	initial embedded length of the polymeric strip specimen;
W	=	initial width of the polymeric strip specimen;
σ_n	=	total normal stress applied to the polymeric strip specimen;
ϕ	=	residual total-stress friction angle of soil; and
c	=	residual total-stress cohesion of soil.

The shear strength parameters (ϕ and c) of the concrete sand used in pullout testing were determined from a series of direct shear tests.

©2008 SGI Testing Services

For each pullout test, the polymeric strip specimen was pulled until a pullout failure occurred. The pullout failure was assumed when the tell-tail wire attached to the rear end of the specimen displaced at least 12 mm (0.5 in.).

6. CLOSURE

The reported test results apply only to the materials and test conditions used in the laboratory testing program. The test results do not necessarily apply to other materials or test conditions. The test results should not be used in engineering analysis unless the test conditions model the anticipated field conditions. The testing was performed in accordance with general engineering testing standards and requirements. This testing report is submitted for the exclusive use of Linear Composites.

APPENDIX A

SUMMARY
PARTICLE SIZE ANALYSIS, COMPACTION, AND DIRECT SHEAR TEST RESULTS

SGI Testing Services, LLC

4405 International Blvd., Suite B-117, Norcross, GA 30093
Ph: (770) 931 8222 Fax: (770) 931 8240

Project Name:	Shear Strength Testing
Project No:	
Client Sample ID:	Concrete Sand
Lab Sample No:	S11648

ASTM D 2216, D 1140, D 422, C 136, D 4318, D 2487

SOIL INDEX PROPERTIES

Moisture Content, Grain Size, Atterberg Limits, Classification

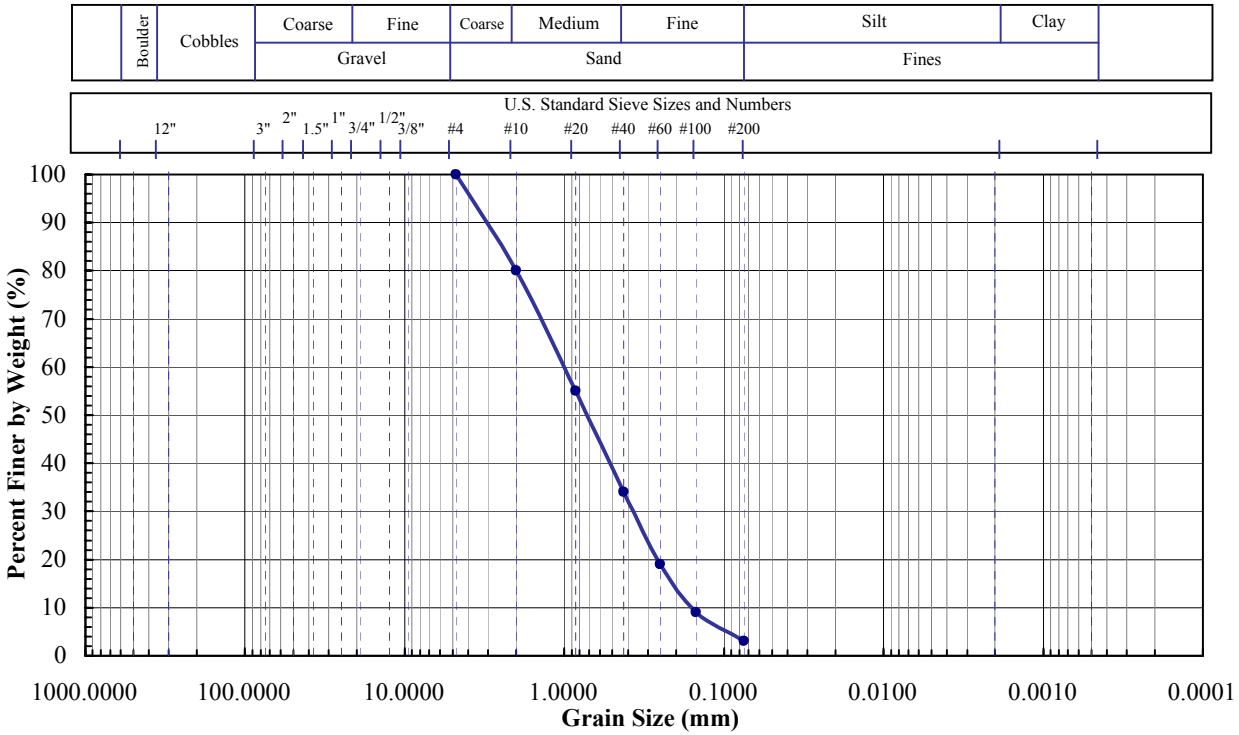

Sieve No.	Size (mm)	% Finer
3"	75	100.0
2"	50	100.0
1.5"	37.5	100.0
1"	25	100.0
3/4"	19	100.0
1/2"	12.5	100.0
3/8"	9.5	100.0
#4	4.75	100.0
#10	2.00	80.0
#20	0.850	55.0
#40	0.425	34.0
#60	0.250	19.0
#100	0.150	9.0
#200	0.075	3.0

Hydrometer Particle Diameter (mm)	% Finer
0.0500	
0.0200	
0.0050	
0.0020	
0.0012	

Gravel (%):	
Sand (%):	97.0
Fines (%):	3.0
Silt (%):	
Clay (%):	

Coeff. Unif. (Cu):	-
Coeff. Curv. (Cc):	-

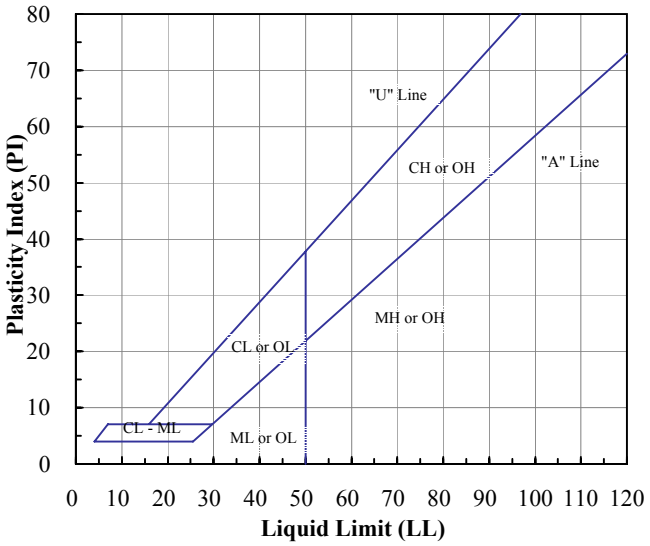

Client Sample ID.	Lab Sample No:	Moisture Content (%)	Fines Content < No. 200 (%)	Atterberg Limits LL (%)	Atterberg Limits PL (%)	Atterberg Limits PI (-)	Engineering Classification
Concrete Sand	S11648	-	3.0	NP	NP	NP	SP (Poorly Graded Sand)

Note(s):

SGI Testing Services, LLC

4405 International Blvd., Suite B-117, Norcross, GA 30093
Ph: (770) 931 8222 Fax: (770) 931 8240

Project Name:	Shear Strength Testing
Project No:	
Client Sample ID:	Concrete Sand
Lab Sample No:	S11648

ASTM D698

COMPACTION MOISTURE-DENSITY RELATIONSHIP

Standard - Method A

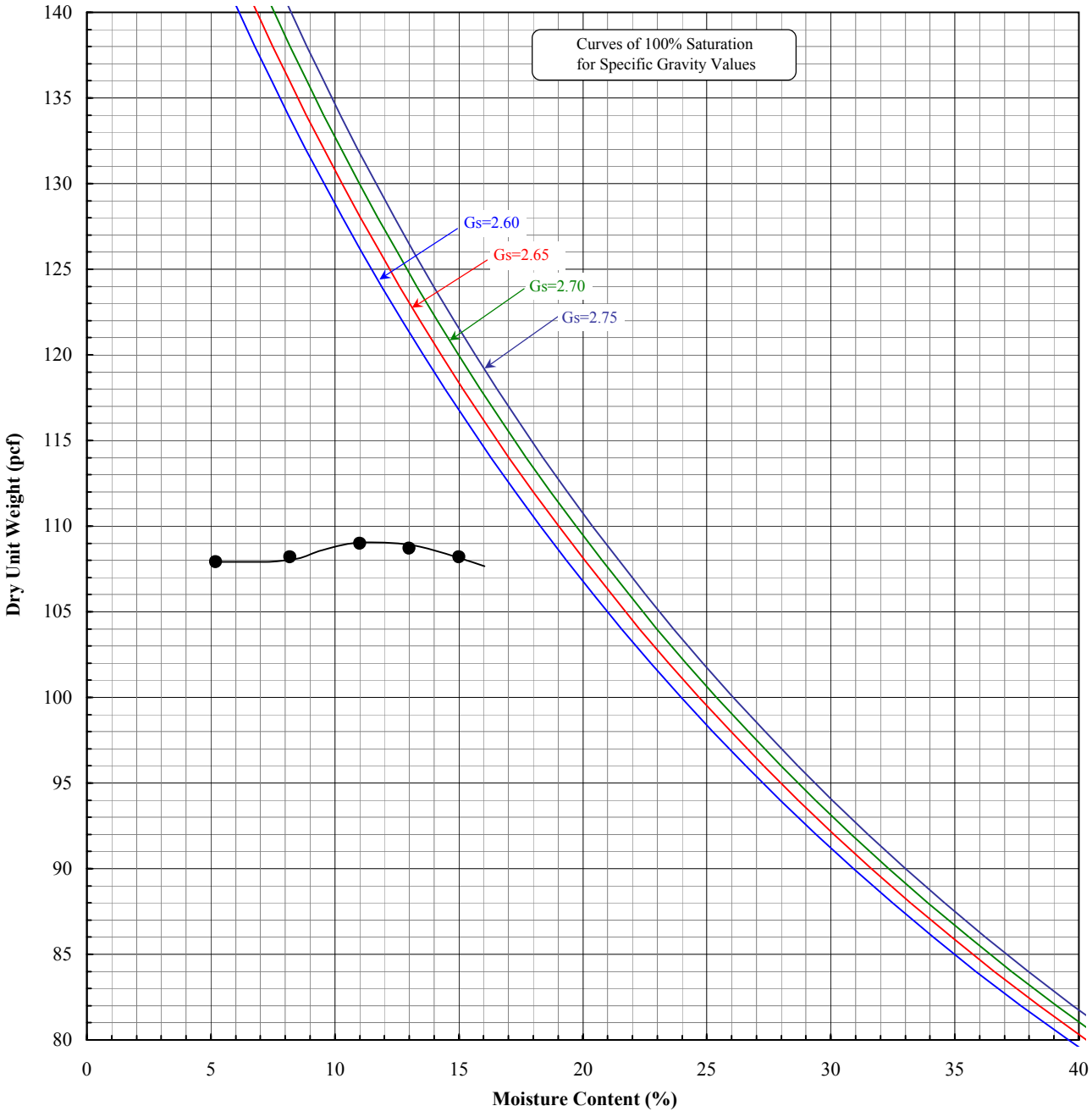

Client Sample ID.	Lab Sample No:	Maximum Dry Unit Weight (pcf)	Optimum Moisture Content (%)	Remarks
Concrete Sand	S11648	109.0	11.0	Concrete Sand

Note(s):

SGI TESTING SERVICES
DIRECT SHEAR TESTING (ASTM D 3080)

Concrete sand compacted to approximately 95% of max. standard Proctor density at optimum moisture content under as-placed moisture conditions

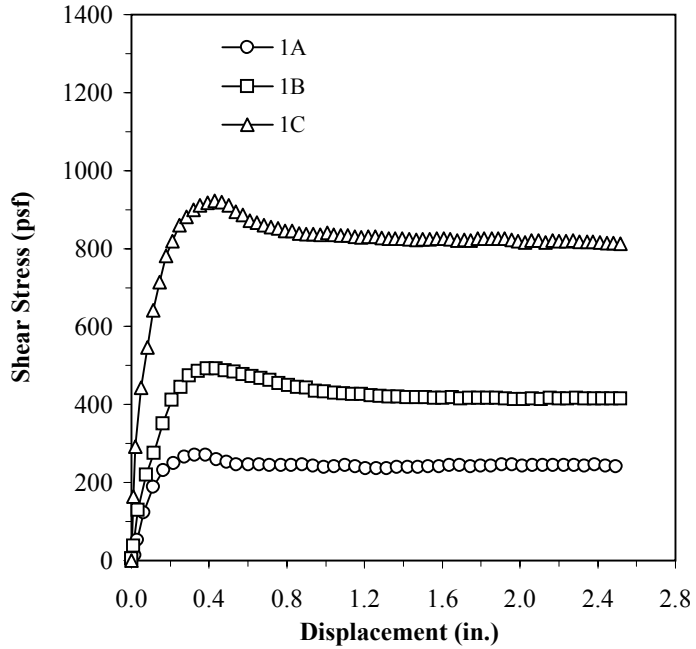

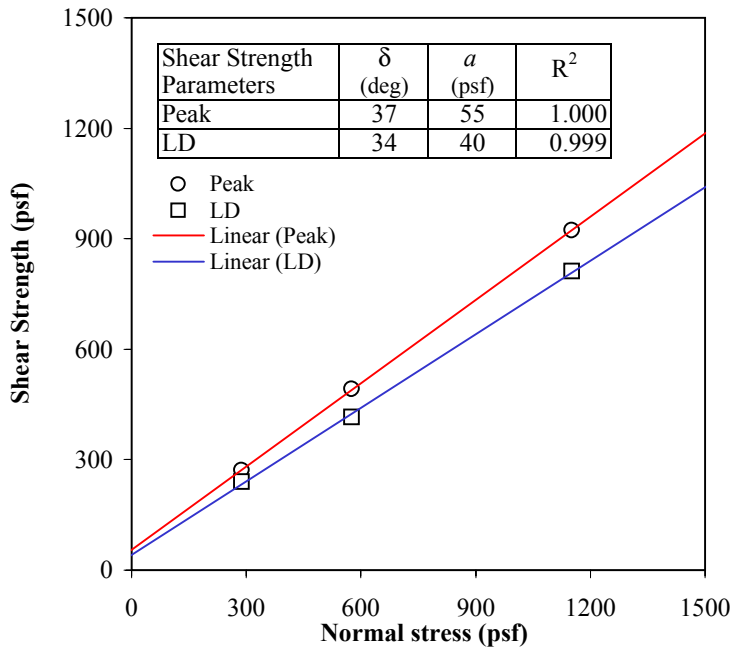

Test No.	Shear Box Size (in. x in.)	Normal Stress (psf)	Shear Rate (in./min)	Soaking		Consolidation		Soil Compaction			Soil Shear Strength Parameters				Shear Strength		Coefficient of Direct Sliding	
				Stress (psf)	Time (hour)	Stress (psf)	Time (hour)	γ_d (pcf)	ω_i (%)	ω_f (%)	ϕ_P (deg)	c_P (psf)	ϕ_{LD} (deg)	c_{LD} (psf)	τ_P (psf)	τ_{LD} (psf)	C_{DS-P}	C_{DS-LD}
1A	12 x 12	288	0.04	-	-	-	-	103.4	12.3	11.9	-	-	-	-	271	240	NA	NA
1B	12 x 12	576	0.04	-	-	-	-	103.5	12.2	12.0	-	-	-	-	492	415	NA	NA
1C	12 x 12	1152	0.04	-	-	-	-	103.3	11.9	11.3	-	-	-	-	923	812	NA	NA

NOTES:

(1) Sliding (i.e., shear failure) occurred internally through the soil specimen at the predetermined plane between the upper and lower shear box during each test.

(2) The reported total-stress parameters of friction angle and adhesion were determined from a best-fit line drawn through the test data. Caution should be exercised in using these strength parameters for applications involving normal stresses outside the range of the stresses covered by the test series. The large-displacement (LD) shear strength was calculated using the shear force measured at the end of the test

DATE OF TEST:

FIGURE NO.	A-3
PROJECT NO.	SGI6013
DOCUMENT NO.	
FILE NO.	

SGI TESTING SERVICES, LLC

APPENDIX B

SUMMARY
PULLOUT TEST PROCEDURES

©2008 SGI Testing Services

For each pullout test, the test specimen was set up in accordance with the following procedures and tested under the specific conditions as described below:

- The concrete sand was placed in the lower half of the pullout box and compacted by hand tamping to form a 150 mm (6 in.) thick layer. For each pullout test, the soil was compacted to the dry unit weight and moisture content presented in the summary table in Appendix C;

- For each pullout test, a polymeric strip was trimmed from the received sample and placed on top of the compacted soil as shown in Figures B-1 and B-2. The front end of the strip was connected to the pullout loading harness using a mechanical connection system;

- Four "tell-tail" wires were connected to selected locations along each test specimen. Displacements at these locations were monitored during testing using linear variable differential transformers (LVDTs) attached to each of the "tell-tail" wires;

- The concrete sand was placed in the upper half of the pullout box and compacted by hand tamping to form a 150 mm (6 in.) thick layer. For each pullout test, the soil was compacted to the dry unit weight and moisture content in the summary table in Appendix C;

- A load cell was then attached to the pullout loading harness to measure the pullout load at the specimen clamp. An LVDT was also fixed to the specimen clamp to measure the total pullout displacement at the specimen clamp;

- A specific normal stress was then applied to the test specimen through hydraulic cylinders;

- After application of the normal stress, the test specimen was immediately subjected to a pullout load by displacing the pullout test specimen at a constant displacement rate of 0.04 in./min as measured on the specimen clamp. Pullout was continued until the pullout failure occurred;

- Each pullout test was tested under as-placed moisture conditions; and

©2008 SGI Testing Services

- The strips used during this testing program were pulled in the longitudinal direction.

©2008 SGI Testing Services

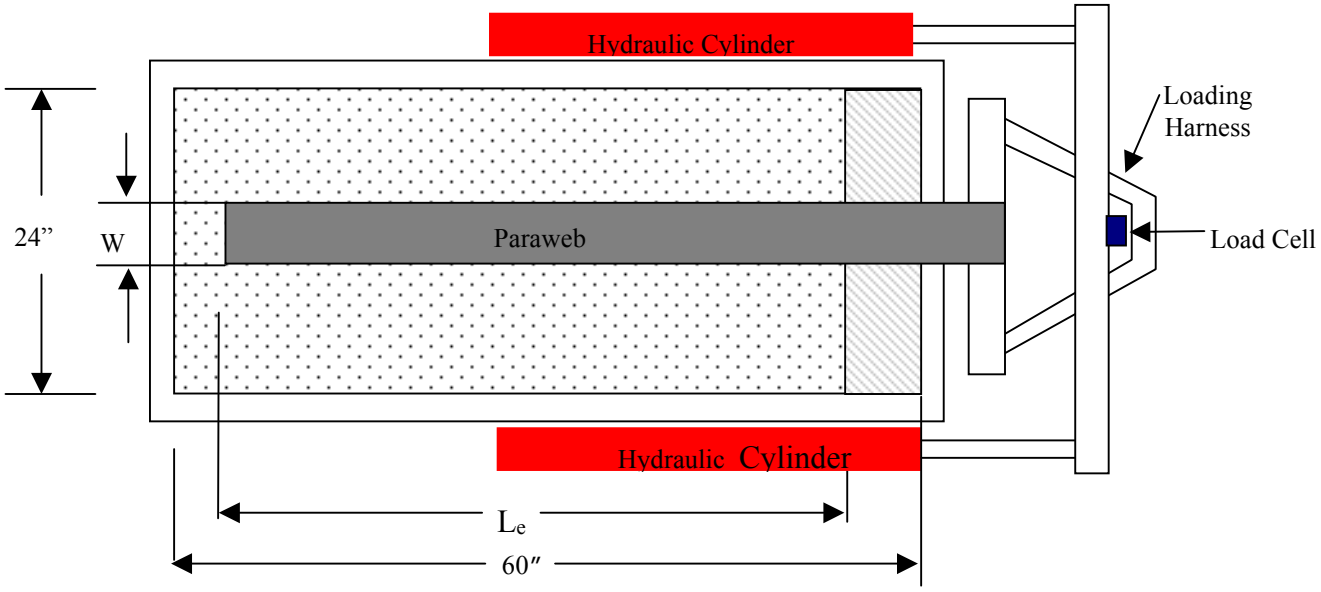

Figure B-1. Plan view of pullout test setup (Note: not to scale).

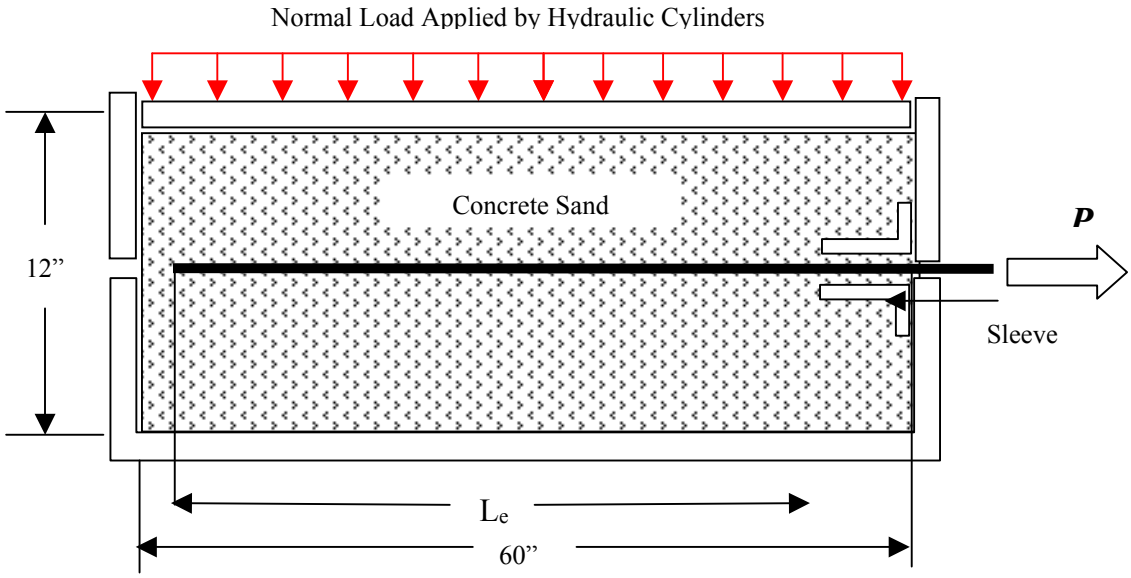

Figure B-2. Cross-section of pullout test setup (Note: not to scale)

APPENDIX C

SUMMARY OF
PULLOUT TEST RESULTS

LINEAR COMPOSITES, LTD
POLYESTER STRIP PULLOUT TESTING (ASTM D 6706 MODIFIED)

TEST SERIES NO. 1: 30 kN Paraweb (coated polyester strip) in machine direction within concrete sand compacted to approximately 95% of maximum standard Proctor density at optimum moisture content

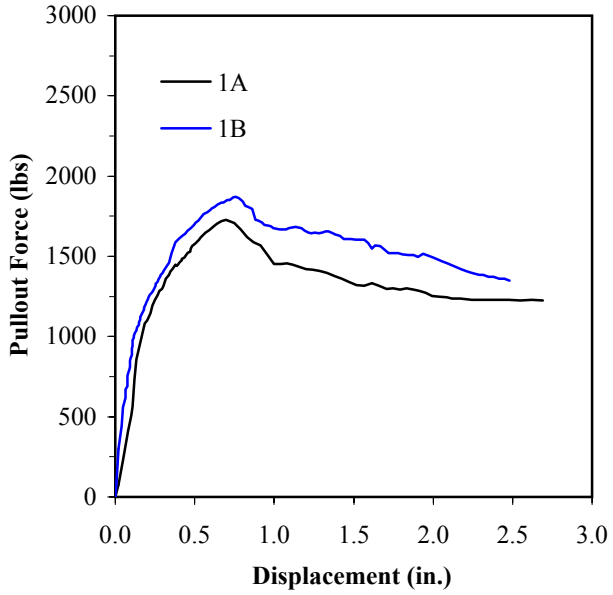

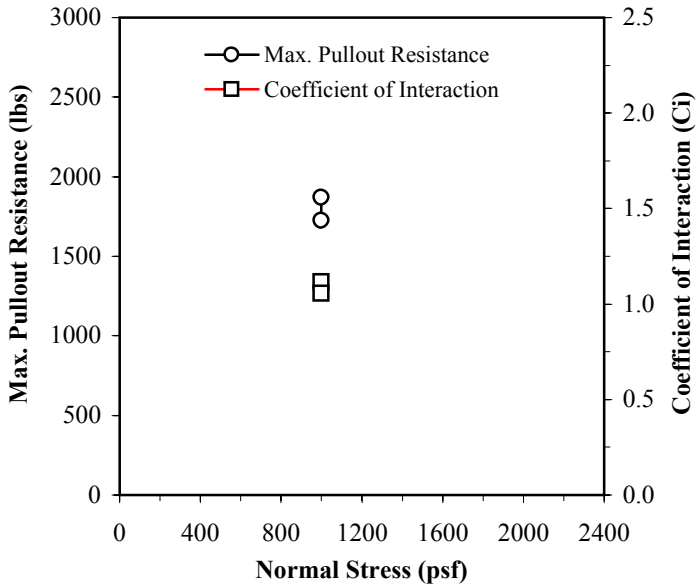

Test No.	Test Specimen Width W (in.)	Embedment Length L (in.)	Normal Stress σ (psf)	Pullout Rate (in./min)	Soil Compaction		Residual Soil Shear Strength[1]		Max. Pullout Resistance P (lbs)	Coefficient of Interaction[2] C_i (-)	Failure Mode[3, 4]
					Initial Dry Unit Weight (pcf)	Initial Moisture Content (%)	ϕ (degree)	c (psf)			
1A	3.3	48.0	1000	0.04	102.9	9.8	34	40	1727	1.12	Pullout
1B	3.3	55.0	1000	0.04	103.5	9.6	34	40	1871	1.05	Pullout

NOTES:

(1) The residual shear strength parameters of the soil material were obtained from a series of direct shear tests.

(2) $C_i = (P/2.W.L)/(\sigma.\tan\phi + c)$

(3) Pullout failure was indicated by a minimum displacement of 0.5 in measured at the tell-tail wire attached to the rear end of the strip.

DATE REPORTED: 7/30/2007

SGI TESTING SERVICES, LLC

FIGURE NO.	C-1
PROJECT NO.	SGI7018
DOCUMENT NO.	SGI7018.08.06
FILE NO.	

P7018-05.pullout.xls

LINEAR COMPOSITES, LTD
POLYESTER STRIP PULLOUT TESTING (ASTM D 6706 MODIFIED)

TEST SERIES NO. 2: 75 kN Paraweb (coated polyester strip) in machine direction within concrete sand compacted to approximately 95% of maximum standard Proctor density at optimum moisture content

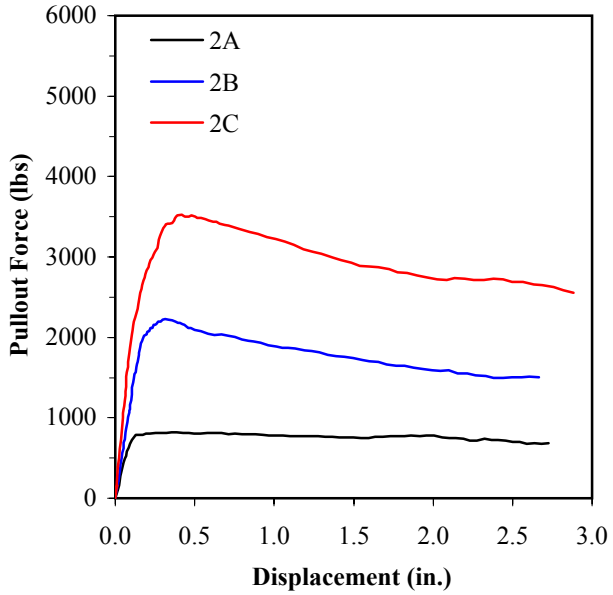

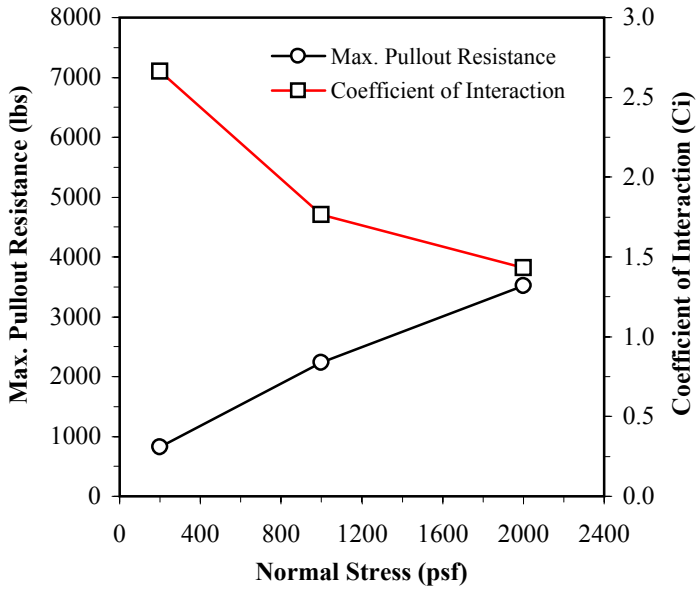

Test No.	Test Specimen Width W (in.)	Embedment Length L (in.)	Normal Stress σ (psf)	Pullout Rate (in./min)	Soil Compaction		Residual Soil Shear Strength[1]		Max. Pullout Resistance P (lbs)	Coefficient of Interaction[2] C_i (-)	Failure Mode[3]
					Initial Dry Unit Weight (pcf)	Initial Moisture Content (%)	ϕ (degree)	c (psf)			
2A	3.5	36.0	200	0.04	102.9	11.1	34	40	825	2.66	Pullout
2B	3.5	36.0	1000	0.04	102.4	10.7	34	40	2231	1.76	Pullout
2C	3.5	36.0	2000	0.04	103.4	10.9	34	40	3522	1.43	Pullout

NOTES:

(1) The residual shear strength parameters of the soil material were obtained from a series of direct shear tests.

(2) $C_i = (P/2.W.L)/(\sigma.\tan\phi + c)$

(3) Pullout failure was indicated by a minimum displacement of 0.5 in measured at the tell-tail wire attached to the rear end of the strip.

DATE REPORTED: 12/10/2007

SGI TESTING SERVICES, LLC

FIGURE NO.	C-2
PROJECT NO.	SGI7018
DOCUMENT NO.	SGI7018.08.06
FILE NO.	

P7018-11R.pullout.xls

LINEAR COMPOSITES, LTD
POLYESTER STRIP PULLOUT TESTING (ASTM D 6706 MODIFIED)

TEST SERIES NO. 3: 100 kN Paraweb (coated polyester strip) in machine direction within concrete sand compacted to approximately 95% of maximum standard Proctor density at optimum moisture content

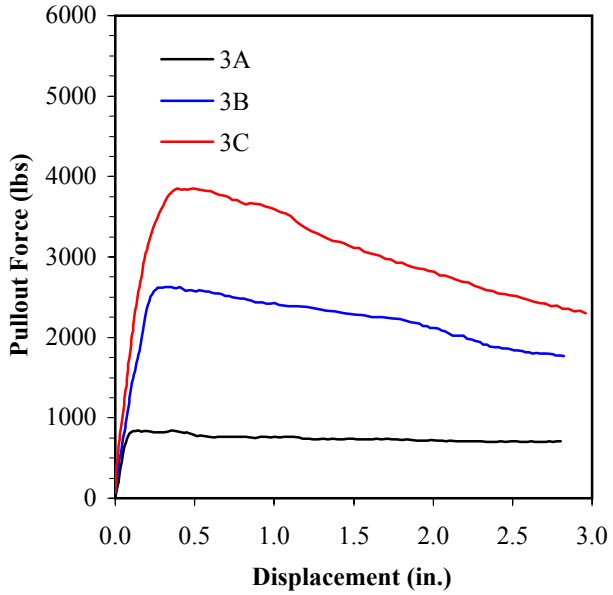

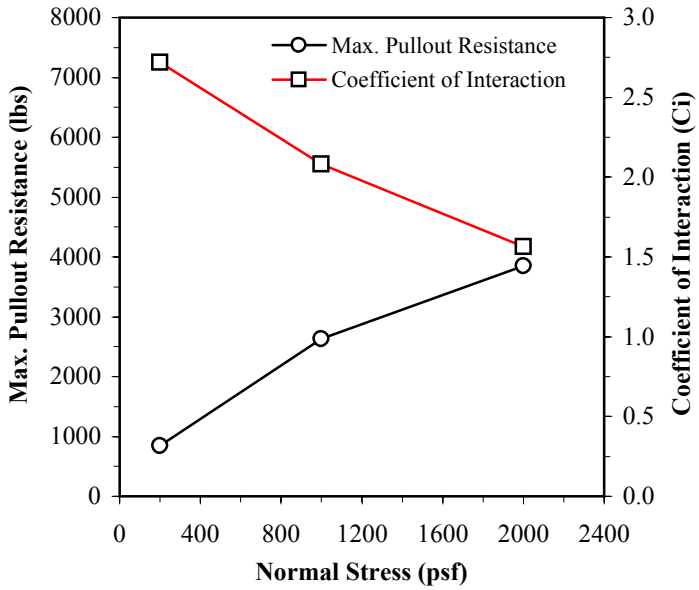

Test No.	Test Specimen Width W (in.)	Embedment Length L (in.)	Normal Stress σ (psf)	Pullout Rate (in./min)	Soil Compaction		Residual Soil Shear Strength[1]		Max. Pullout Resistance P (lbs)	Coefficient of Interaction[2] C_i (-)	Failure Mode[3]
					Initial Dry Unit Weight (pcf)	Initial Moisture Content (%)	ϕ (degree)	c (psf)			
3A	3.5	36.0	200	0.04	103.8	10.3	34	40	842	2.72	Pullout
3B	3.5	36.0	1000	0.04	102.7	10.8	34	40	2633	2.08	Pullout
3C	3.5	36.0	2000	0.04	103.1	10.2	34	40	3850	1.57	Pullout

NOTES:

(1) The residual shear strength parameters of the soil material were obtained from a series of direct shear tests.

(2) $C_i = (P/2.W.L)/(\sigma.\tan\phi + c)$

(3) Pullout failure was indicated by a minimum displacement of 0.5 in measured at the tell-tail wire attached to the rear end of the strip.

DATE REPORTED: 12/10/2007

SGI TESTING SERVICES, LLC

FIGURE NO.	C-3
PROJECT NO.	SGI7018
DOCUMENT NO.	SGI7018.08.06
FILE NO.	

P7018-12R.pullout.xls

LINEAR COMPOSITES, LTD
POLYESTER STRIP PULLOUT TESTING (ASTM D 6706 MODIFIED)

TEST SERIES NO. 1: 85mm 30kN/m coated polyester strip in machine direction within silty sand compacted to approximately 95% of maximum standard Proctor density at optimum moisture content

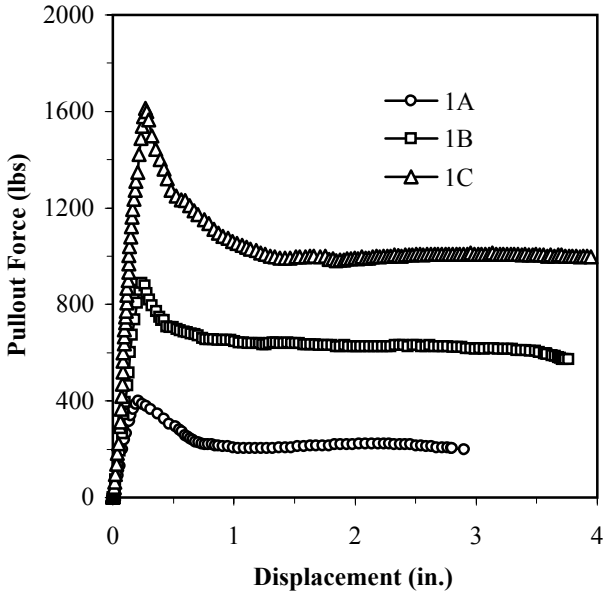

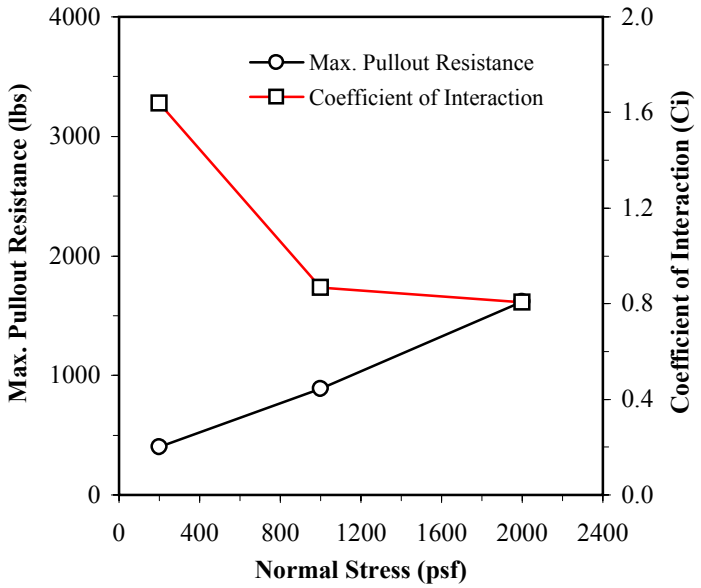

Test No.	Test Specimen Width W (in.)	Embedment Length L (in.)	Normal Stress σ (psf)	Pullout Rate (in./min)	Soil Compaction		Residual Soil Shear Strength[1]		Max. Pullout Resistance P (lbs)	Coefficient of Interaction[2] C_i (-)	Failure Mode[3]
					Initial Dry Unit Weight (pcf)	Initial Moisture Content (%)	ϕ (degree)	c (psf)			
1A	3.3	36.0	200	0.04	93.2	19.2	31	30	400	1.64	Pullout
1B	3.3	36.0	1000	0.04	93.7	18.7	31	30	889	0.87	Pullout
1C	3.3	36.0	2000	0.04	93.9	18.5	31	30	1615	0.81	Pullout

NOTES:

(1) The residual shear strength parameters of the soil material were obtained from a series of direct shear tests.

(2) $C_i = (P/2.W.L)/(\sigma.\tan\phi + c)$

(3) Pullout failure was indicated by a minimum displacement of 0.5 in measured at the tell-tail wire attached to the rear end of the strip.

DATE TESTED: 2/27 to 3/5/2007

SGI TESTING SERVICES, LLC

FIGURE NO.	C-1
PROJECT NO.	SGI7018
DOCUMENT NO.	
FILE NO.	

SGI Testing Services, LLC

4405 International Blvd., Suite B-117, Norcross, GA 30093
Ph: (770) 931-8222 Fax: (770) 931-8240

Project Name:	Installation Damage
Project No:	SGI4062
Client Sample ID:	Silty Sand
Lab Sample No:	S11082

ASTM D698

COMPACTION MOISTURE-DENSITY RELATIONSHIP

Standard - Method A

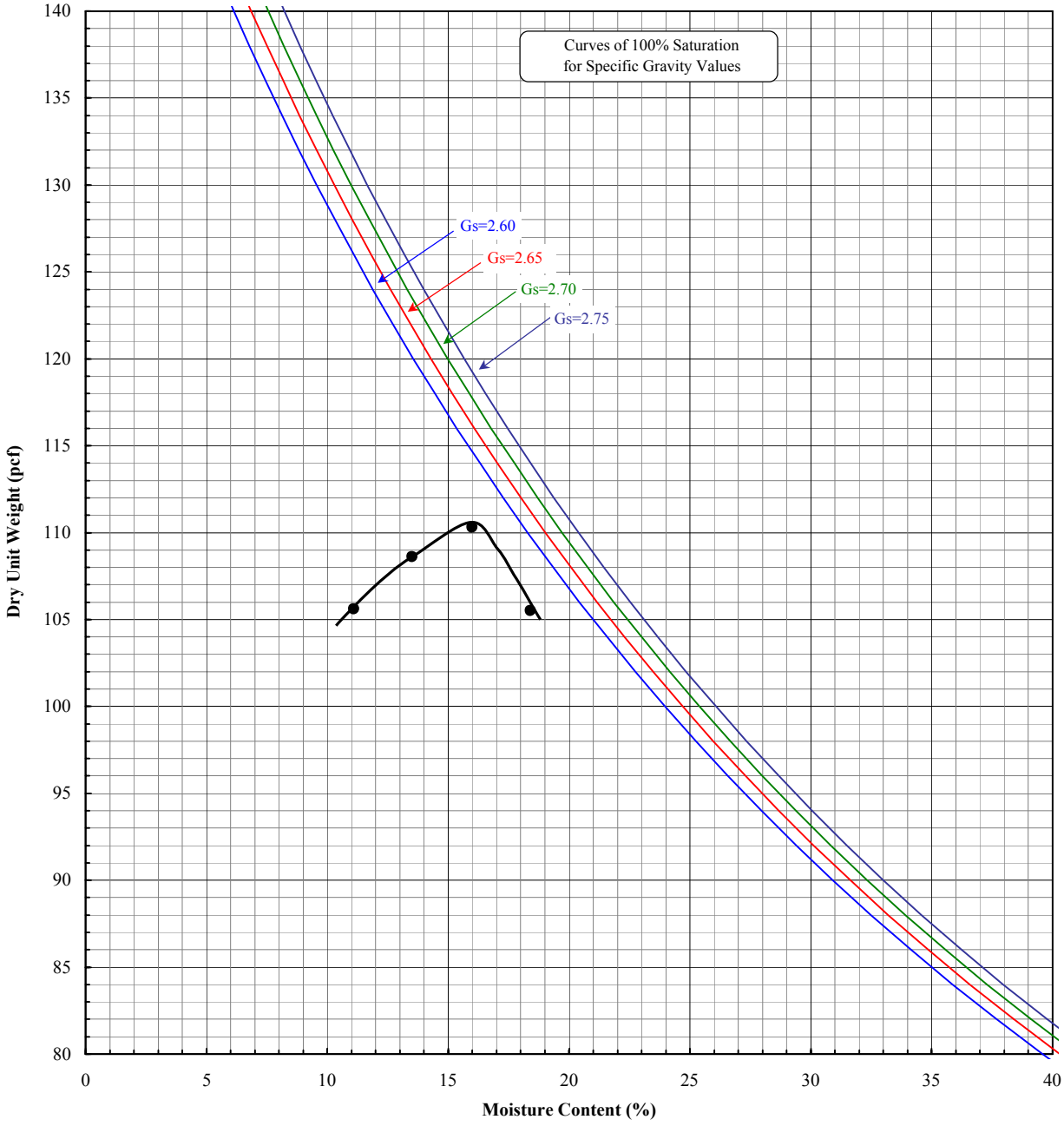

Client Sample ID.	Lab Sample No:	Maximum Dry Unit Weight (pcf)	Optimum Moisture Content (%)	Remarks
Silty Sand	S11082	110.4	15.8	

Note(s):

SGI Testing Services, LLC

4405 International Blvd., Suite B-117, Norcross, GA 30093
Ph: (770) 931-8222 Fax: (770) 931-8240

Project Name:	Installation Damage
Project No:	SGI4062
Client Sample ID:	Silty Sand
Lab Sample No:	S11082

ASTM D 2216, D 1140, D 422, C 136, D 4318, D 2487

SOIL INDEX PROPERTIES

Moisture Content, Grain Size, Atterberg Limits, Classification

Boulder	Cobbles	Coarse Gravel	Fine Gravel	Coarse Sand	Medium Sand	Fine Sand	Silt Fines	Clay Fines

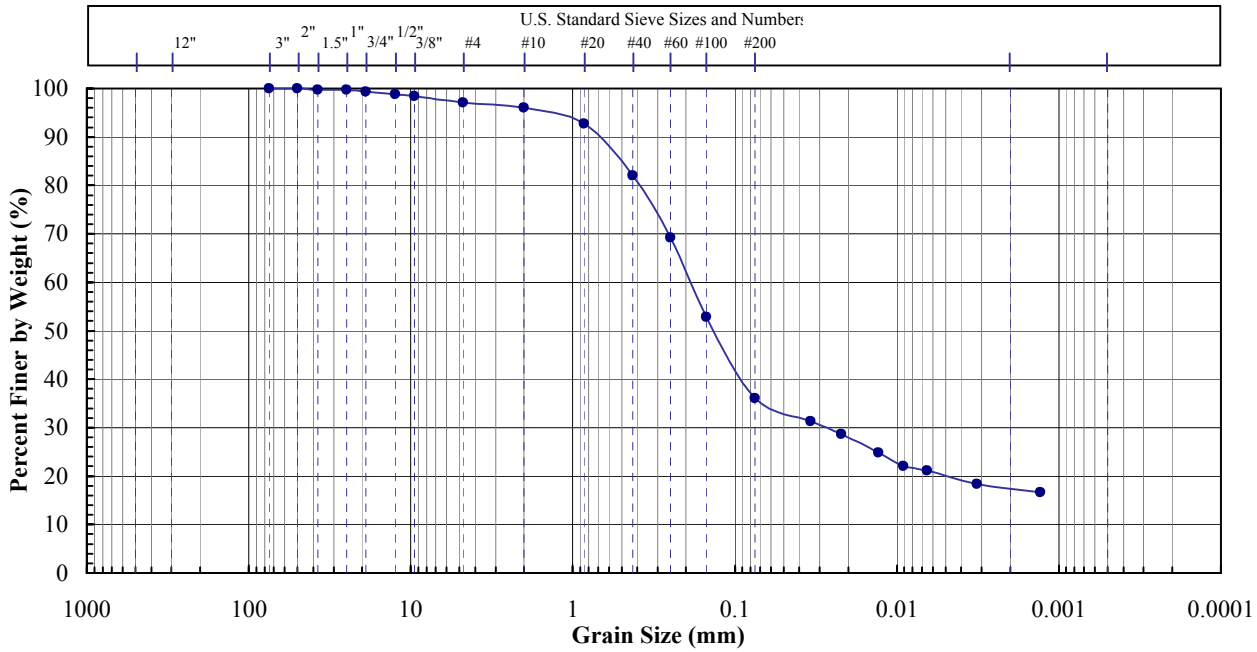

Sieve No.	Size (mm)	% Finer
3"	75	100.0
2"	50	100.0
1.5"	37.5	99.7
1"	25	99.7
3/4"	19	99.4
1/2"	12.5	98.8
3/8"	9.5	98.4
#4	4.75	97.1
#10	2.00	96.1
#20	0.850	92.7
#40	0.425	82.0
#60	0.250	69.2
#100	0.150	52.9
#200	0.075	36.1

	31.3
	28.6
	21.2
	18.4
	16.6

Gravel (%):	2.9
Sand (%):	61.0
Fines (%):	36.1

	-
	-

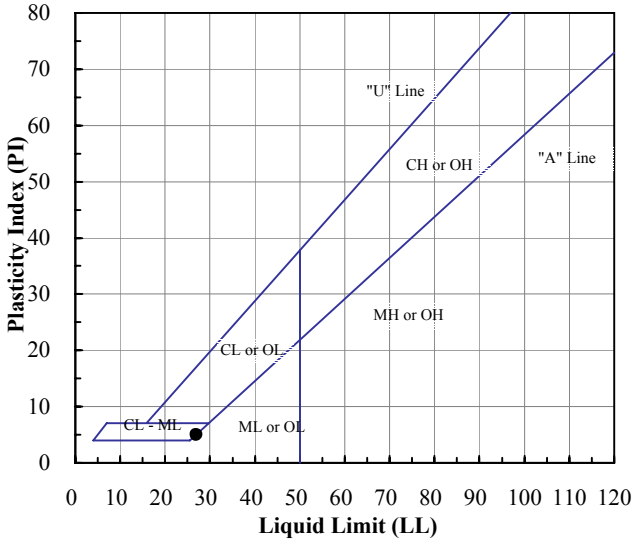

				LL (%)	PL (%)	PI (-)	
				27	22	5	

Note(s):

LINEAR COMPOSITES, LTD
POLYESTER STRIP PULLOUT TESTING (ASTM D 6706 MODIFIED)

TEST SERIES NO. 2: 85mm 30kN/m coated polyester strip in machine direction within concrete sand compacted to approximately 95% of maximum standard Proctor density at optimum moisture content

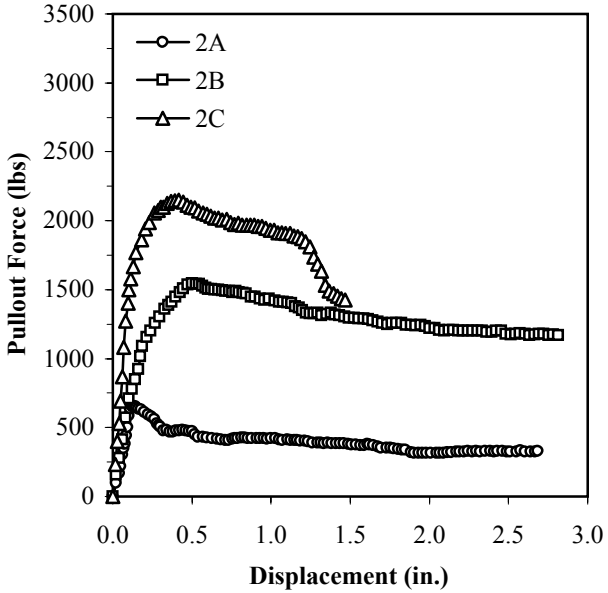

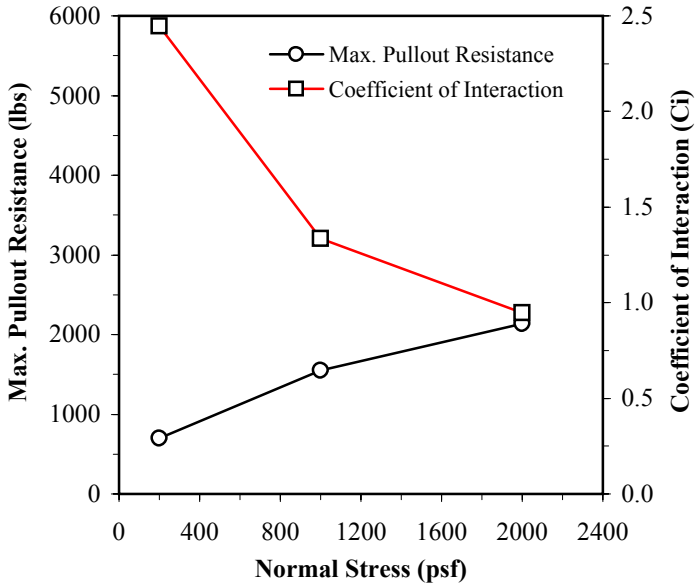

Test No.	Test Specimen Width W (in.)	Embedment Length L (in.)	Normal Stress σ (psf)	Pullout Rate (in./min)	Soil Compaction		Residual Soil Shear Strength[1]		Max. Pullout Resistance P (lbs)	Coefficient of Interaction[2] C_i (-)	Failure Mode[3]
					Initial Dry Unit Weight (pcf)	Initial Moisture Content (%)	ϕ (degree)	c (psf)			
2A	3.3	36.0	200	0.04	103.2	10.7	34	40	695	2.45	Pullout
2B	3.3	36.0	1000	0.04	102.9	10.4	34	40	1551	1.34	Pullout
2C	3.3	36.0	2000	0.04	103.8	10.9	34	40	2140	0.95	Rupture

NOTES:

(1) The residual shear strength parameters of the soil material were obtained from a series of direct shear tests.

(2) $C_i = (P/2.W.L)/(\sigma.\tan\phi + c)$

(3) Pullout failure was indicated by a minimum displacement of 0.5 in measured at the tell-tail wire attached to the rear end of the strip.

DATE TESTED: 3/5 to 3/20/2007

SGI TESTING SERVICES, LLC

FIGURE NO.	C-2
PROJECT NO.	SGI7018
DOCUMENT NO.	
FILE NO.	

SGI Testing Services, LLC

4405 International Blvd., Suite B-117, Norcross, GA 30093
Ph: (770) 931-8222 Fax: (770) 931-8240

Project Name:	Installation Damage
Project No:	SGI4062
Client Sample ID:	Concrete Sand
Lab Sample No:	S11083

ASTM D 2216, D 1140, D 422, C 136, D 4318, D 2487

SOIL INDEX PROPERTIES

Moisture Content, Grain Size, Atterberg Limits, Classification

Boulder	Cobbles	Gravel: Coarse	Gravel: Fine	Sand: Coarse	Sand: Medium	Sand: Fine	Fines: Silt	Fines: Clay

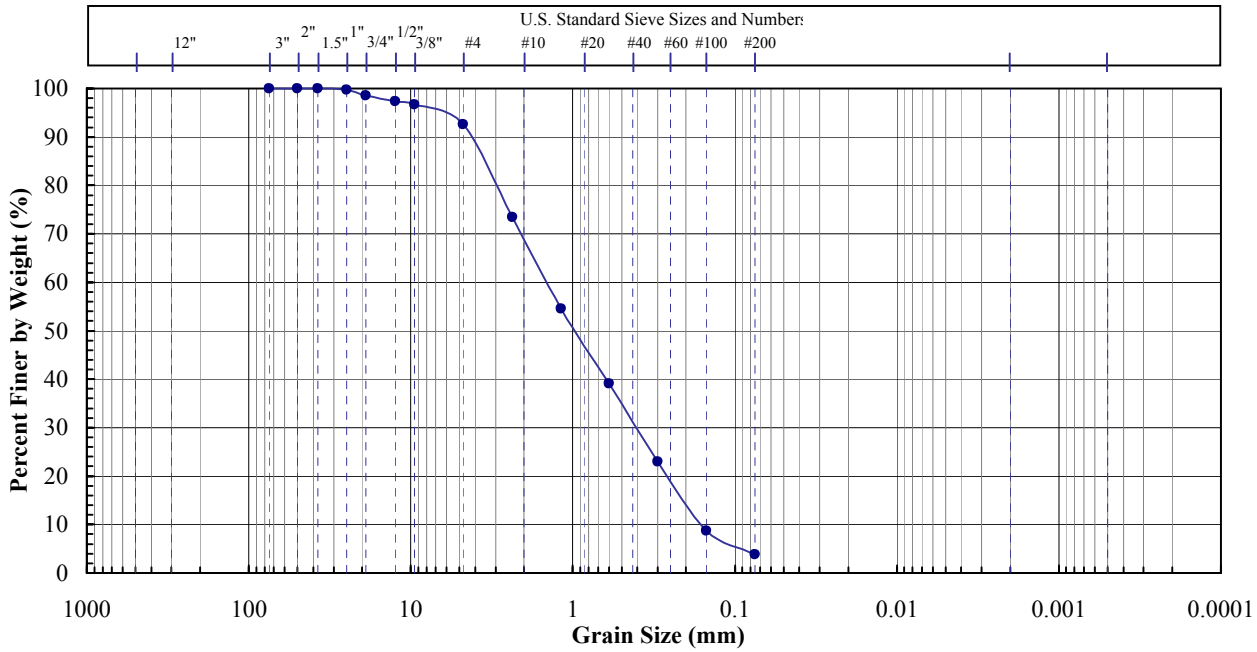

Sieve No.	Size (mm)	% Finer
3"	75	100.0
2"	50	100.0
1.5"	37.5	100.0
1"	25	99.8
3/4"	19	98.6
1/2"	12.5	97.4
3/8"	9.5	96.7
#4	4.75	92.6
#10	2.00	73.5
#20	0.850	54.6
#40	0.425	39.1
#60	0.250	23.0
#100	0.150	8.7
#200	0.075	3.8

Hydrometer Particle Diameter (mm)	% Finer
0.0340	
0.0220	
0.0065	
0.0032	
0.0013	

Gravel (%):	7.4
Sand (%):	88.8
Fines (%):	3.8
Silt (%):	
Clay (%):	

Coeff. Unif. (Cu):	-
Coeff. Curv. (Cc):	-

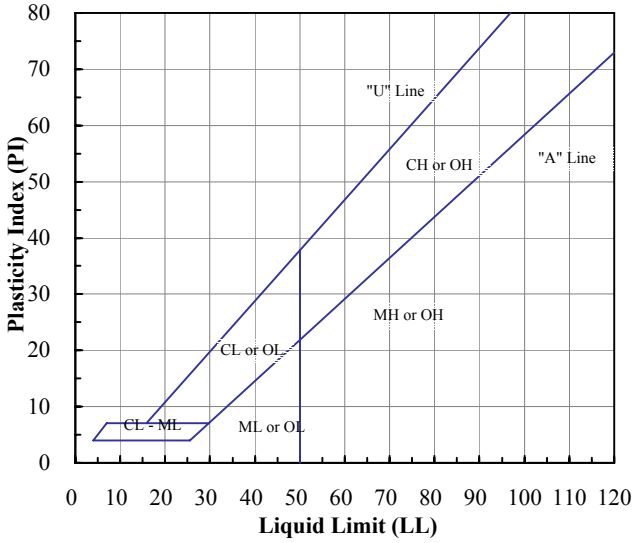

Client Sample ID.	Lab Sample No:	Moisture Content (%)	Fines Content < No. 200 (%)	Atterberg Limits LL (%)	Atterberg Limits PL (%)	Atterberg Limits PI (-)	Engineering Classification
Concrete Sand	S11083	5.3	3.8				SP

Note(s):

SGI Testing Services, LLC

4405 International Blvd., Suite B-117, Norcross, GA 30093
Ph: (770) 931-8222 Fax: (770) 931-8240

Project Name:	Installation Damage
Project No:	SGI4062
Client Sample ID:	Concrete Sand
Lab Sample No:	S11083

ASTM D698

COMPACTION MOISTURE-DENSITY RELATIONSHIP

Standard - Method A

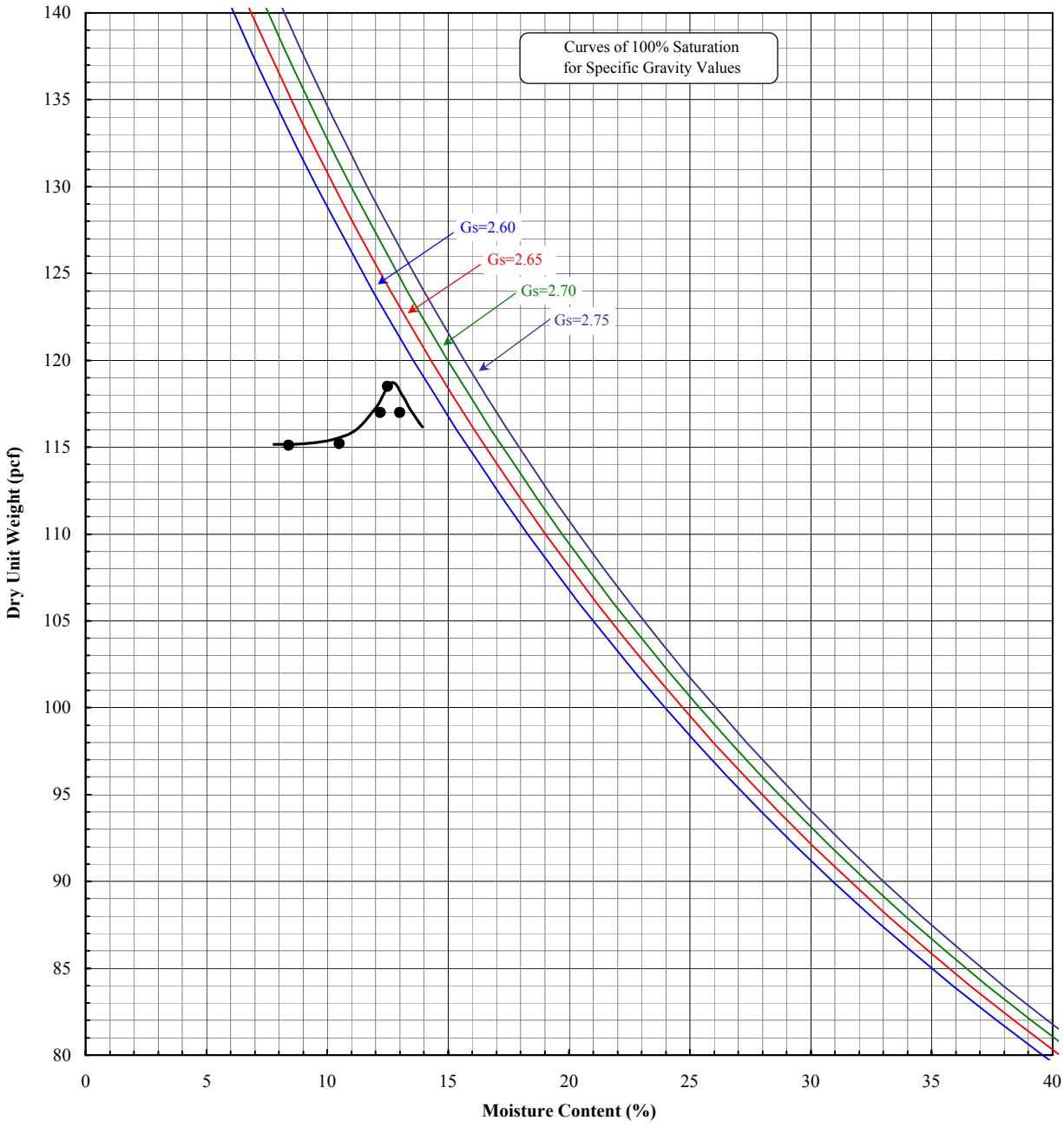

Client Sample ID.	Lab Sample No:	Maximum Dry Unit Weight (pcf)	Optimum Moisture Content (%)	Remarks
Concrete Sand	S11083	118.5	12.7	

Note(s):
Corrected Maximum Dry Unit Weight (pcf) 121.1
Corrected Optimum Moisture Content (%) 11.9

LINEAR COMPOSITES, LTD
POLYESTER STRIP PULLOUT TESTING (ASTM D 6706 MODIFIED)

TEST SERIES NO. 3: 50mm (coated polyester) strip in machine direction within concrete sand compacted to approximately 95% of maximum standard Proctor density at optimum moisture content

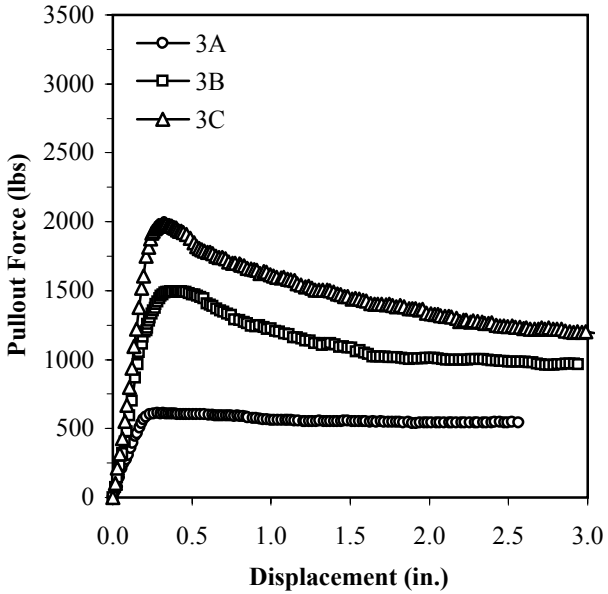

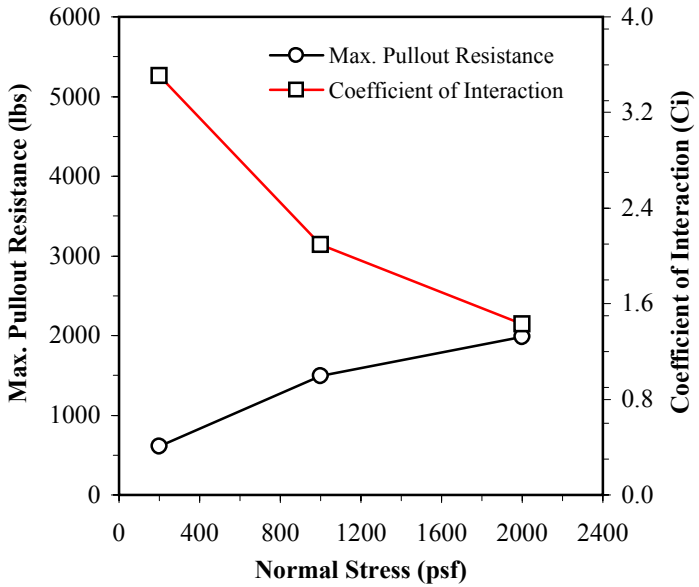

Test No.	Test Specimen Width W (in.)	Embedment Length L (in.)	Normal Stress σ (psf)	Pullout Rate (in./min)	Soil Compaction		Residual Soil Shear Strength[1]		Max. Pullout Resistance P (lbs)	Coefficient of Interaction[2] C_i (-)	Failure Mode[3]
					Initial Dry Unit Weight (pcf)	Initial Moisture Content (%)	ϕ (degree)	c (psf)			
3A	2.0	36.0	200	0.04	104.1	10.5	34	40	613	3.50	Pullout
3B	2.0	36.0	1000	0.04	103.9	11.0	34	40	1496	2.09	Pullout
3C	2.0	36.0	2000	0.04	103.2	10.7	34	40	1986	1.43	Pullout

NOTES:

(1) The residual shear strength parameters of the soil material were obtained from a series of direct shear tests.

(2) $C_i = (P/2.W.L)/(\sigma.\tan\phi + c)$

(3) Pullout failure was indicated by a minimum displacement of 0.5 in measured at the tell-tail wire attached to the rear end of the strip.

DATE TESTED: 3/20 to 3/26/2007

SGI TESTING SERVICES, LLC

FIGURE NO.	C-3
PROJECT NO.	SGI7018
DOCUMENT NO.	
FILE NO.	

1.2.8 DIRECT SLIDING PROPERTIES

Paraweb Interface Direct Shear Tests

© Stone Strong Systems

SGI TESTING SERVICES
A Georgia Limited Liability Company

26 November 2008

Mr. Robert Lozano
Linear Composites, Ltd
7830 Laurelton Drive
Chattanooga, TN 37421-1953

Subject: Laboratory Test Results Transmittal
Interface Direct Shear Testing
Soil/ParaWeb Polymeric Strips

Dear Mr. Lozano,

SGI Testing Services, LLC (SGI) is pleased to present the attached test results for the above-mentioned testing program. The note section below addresses sample preparation, sample disposal and a disclosure statement.

SGI appreciates the opportunity to provide laboratory testing services to Linear Composites, Ltd. Should you have any questions regarding the attached document, or if you require additional information, please do not hesitate to contact the undersigned.

Sincerely,

Zehong Yuan, Ph.D., P.E.
Laboratory Manager

Attachment

Notes:
(1) Unless otherwise noted in the test results the sample(s)/specimen(s) were prepared in accordance with the applicable test standards or generally accepted sampling procedures.
(2) Contaminated/chemical samples and all related laboratory generated waste (i.e., test liquids, PPE, absorbents, etc.) will be returned to the client or designated representative(s), at the client's cost, within 60 days following the completion of the testing program, unless special arrangements for proper disposal are made with SGI_{sm}.
(3) Materials that are not contaminated will be discarded after test specimens and archived specimens are obtained. All of the tested and archived specimens will be discarded 30 days after the completion of testing, unless long-term storage arrangements are specifically made with the laboratory.
(4) The reported results apply only to the materials and test conditions used in the laboratory testing program. The results do not necessarily apply to other materials or test conditions. The test results should not be used in engineering analysis unless the test conditions model the anticipated field conditions. The testing was performed in accordance with general engineering testing standards and requirements. The reported results are submitted for the exclusive use of the client to whom they are addressed.

SGI7018.REPORT.08.03

Mail To: SGI Testing Services, LLC
P.O. Box 2427
Lilburn, Georgia 30048-2427

Web Site: www.interactionspecialists.com

Facility Location
4405 International Boulevard
Suite B-117
Norcross, Georgia 30093

Phone: 770.931.8222 Fax: 770.931.8240

LINEAR COMPOSITES, LTD

INTERFACE DIRECT SHEAR TESTING (ASTM D 5321)

Upper Shear Box: Graded aggregate base (GAB) material compacted to approximately 95% of max. modified Proctor density at optimum moisture against 30 kN Paraweb Style 2S (100% coverage)

Lower Shear Box: Graded aggregate base (GAB) material compacted to approximately 95% of max. modified Proctor density at optimum moisture

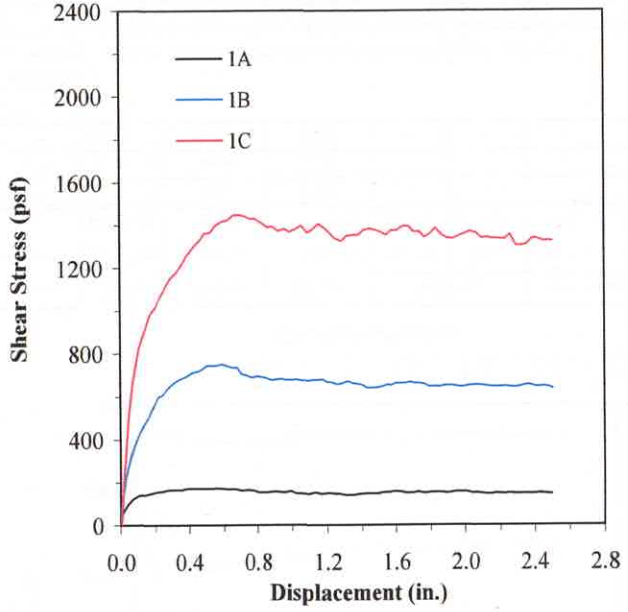

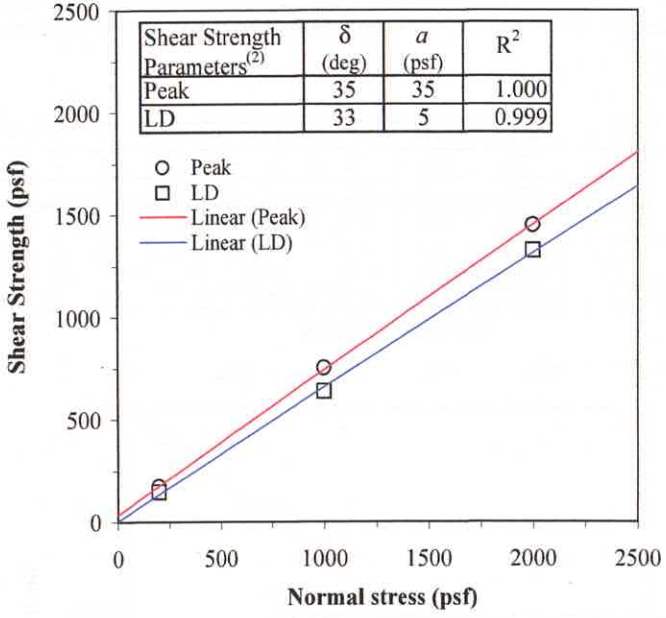

Shear Strength Parameters[2]	δ (deg)	a (psf)	R^2
Peak	35	35	1.000
LD	33	5	0.999

Test No.	Shear Box Size (in. x in.)	Normal Stress (psf)	Shear Rate (in./min)	Soaking		Consolidation		Soil Compaction			Soil Shear Strength Parameters				Shear Strength[1]		Coefficient of Direct Sliding	
				Stress (psf)	Time (hour)	Stress (psf)	Time (hour)	γ_d (pcf)	ω_i (%)	ω_f (%)	ϕ_P (deg)	c_P (psf)	ϕ_{LD} (deg)	c_{LD} (psf)	τ_P (psf)	τ_{LD} (psf)	C_{DS-P}	C_{DS-LD}
1A	12 x 12	200	0.04	-	-	-	-	135.5	4.7	4.8	45	45	42	15	172	146	0.70	0.75
1B	12 x 12	1000	0.04	-	-	-	-	134.7	5.3	5.1	45	45	42	15	751	637	0.72	0.70
1C	12 x 12	2000	0.04	-	-	-	-	134.3	5.6	5.3	45	45	42	15	1450	1323	0.71	0.73

NOTES:

(1) Sliding (i.e., shear failure) occurred at intended test interface in each test.

(2) The reported total-stress parameters of friction angle and adhesion were determined from a best-fit line drawn through the test data. Caution should be exercised in using these strength parameters for applications involving normal stresses outside the range of the stresses covered by the test series. The large-displacement (LD) shear strength was calculated using the shear force measured at the end of the test.

DATE OF REPORT:	6/30/2008
FIGURE NO.	C-1
PROJECT NO.	SGI7018
DOCUMENT NO.	SGI08023
FILE NO.	

SGI TESTING SERVICES, LLC

LINEAR COMPOSITES, LTD

INTERFACE DIRECT SHEAR TESTING (ASTM D 5321)

Upper Shear Box: Graded aggregate base (GAB) material compacted to approximately 95% of max. modified Proctor density at optimum moisture against 30 kN Paraweb Style 2D (100% coverage)

Lower Shear Box: Graded aggregate base (GAB) material compacted to approximately 95% of max. modified Proctor density at optimum moisture

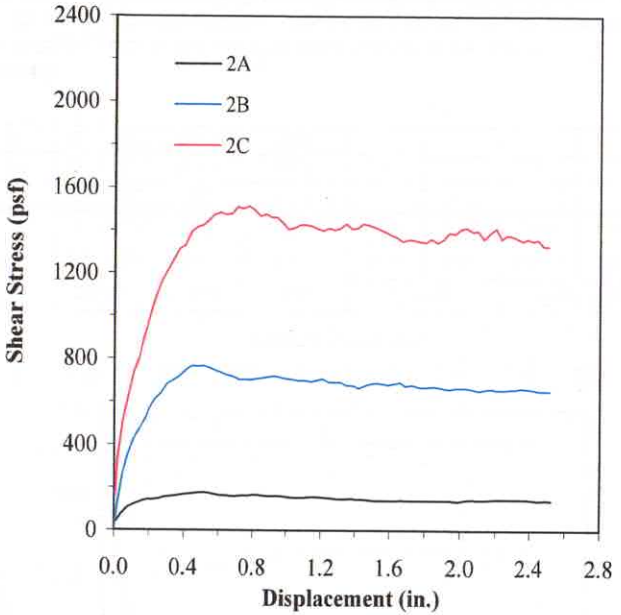

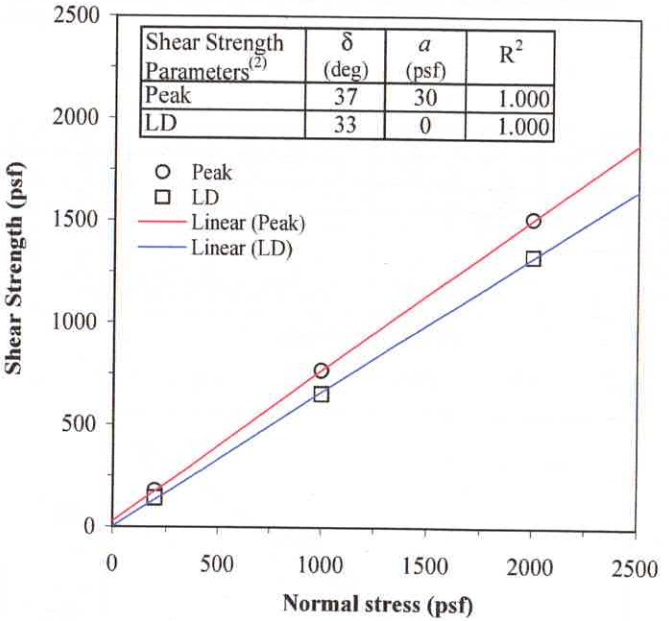

Test No.	Shear Box Size (in. x in.)	Normal Stress (psf)	Shear Rate (in./min)	Soaking		Consolidation		Soil Compaction			Soil Shear Strength Parameters				Shear Strength(1)		Coefficient of Direct Sliding	
				Stress (psf)	Time (hour)	Stress (psf)	Time (hour)	γ_d (pcf)	ω_i (%)	ω_f (%)	ϕ_P (deg)	c_P (psf)	ϕ_{LD} (deg)	c_{LD} (psf)	τ_P (psf)	τ_{LD} (psf)	C_{DS-P}	C_{DS-LD}
2A	12 x 12	200	0.04	-	-	-	-	134.8	5.2	5.0	45	45	42	15	177	139	0.72	0.71
2B	12 x 12	1000	0.04	-	-	-	-	134.5	5.5	4.8	45	45	42	15	767	652	0.73	0.71
2C	12 x 12	2000	0.04	-	-	-	-	135.2	4.9	5.1	45	45	42	15	1511	1328	0.74	0.73

NOTES:

(1) Sliding (i.e., shear failure) occurred at intended test interface in each test.

(2) The reported total-stress parameters of friction angle and adhesion were determined from a best-fit line drawn through the test data. Caution should be exercised in using these strength parameters for applications involving normal stresses outside the range of the stresses covered by the test series. The large-displacement (LD) shear strength was calculated using the shear force measured at the end of the test.

SGI TESTING SERVICES, LLC

DATE OF REPORT:	6/30/2008
FIGURE NO.	C-2
PROJECT NO.	SGI7018
DOCUMENT NO.	SGI08023
FILE NO.	

LINEAR COMPOSITES, LTD

INTERFACE DIRECT SHEAR TESTING (ASTM D 5321)

Upper Shear Box: Graded aggregate base (GAB) material compacted to approximately 95% of max. modified Proctor density at optimum moisture against 30 kN Paraweb Style 2E+ (100% coverage)

Lower Shear Box: Graded aggregate base (GAB) material compacted to approximately 95% of max. modified Proctor density at optimum moisture

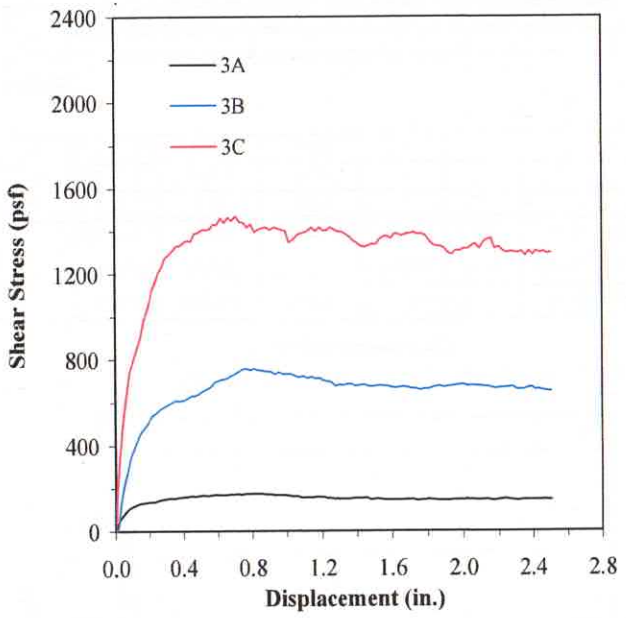

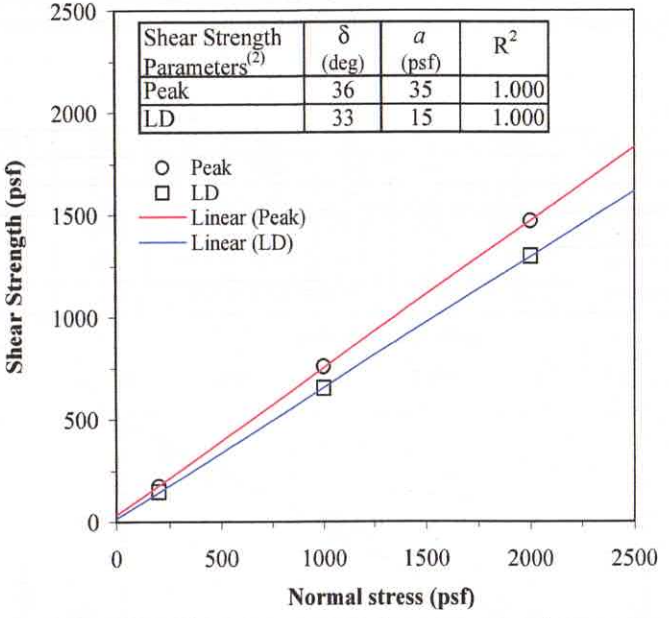

Shear Strength Parameters[2]	δ (deg)	a (psf)	R^2
Peak	36	35	1.000
LD	33	15	1.000

Test No.	Shear Box Size (in. x in.)	Normal Stress (psf)	Shear Rate (in./min)	Soaking Stress (psf)	Soaking Time (hour)	Consolidation Stress (psf)	Consolidation Time (hour)	Soil Compaction γ_d (pcf)	Soil Compaction ω_i (%)	Soil Compaction ω_f (%)	Soil Shear Strength Parameters ϕ_P (deg)	c_P (psf)	ϕ_{LD} (deg)	c_{LD} (psf)	Shear Strength[1] τ_P (psf)	τ_{LD} (psf)	Coefficient of Direct Sliding C_{DS-P}	C_{DS-LD}
3A	12 x 12	200	0.04	-	-	-	-	134.6	5.4	5.5	45	45	42	15	174	145	0.71	0.74
3B	12 x 12	1000	0.04	-	-	-	-	135.1	5.0	4.9	45	45	42	15	759	652	0.73	0.71
3C	12 x 12	2000	0.04	-	-	-	-	134.3	5.6	5.3	45	45	42	15	1470	1297	0.72	0.71

NOTES:

(1) Sliding (i.e., shear failure) occurred at intended test interface in each test.

(2) The reported total-stress parameters of friction angle and adhesion were determined from a best-fit line drawn through the test data. Caution should be exercised in using these strength parameters for applications involving normal stresses outside the range of the stresses covered by the test series. The large-displacement (LD) shear strength was calculated using the shear force measured at the end of the test.

SGI TESTING SERVICES, LLC

DATE OF REPORT:	6/30/2008
FIGURE NO.	C-3
PROJECT NO.	SGI7018
DOCUMENT NO.	SGI08023
FILE NO.	

LINEAR COMPOSITES, LTD

INTERFACE DIRECT SHEAR TESTING (ASTM D 5321)

Upper Shear Box: Concrete sand compacted to approximately 95% of max standard Proctor density at optimum moisture against 30 kN Paraweb Style 2D (100% coverage)

Lower Shear Box: Concrete sand compacted to approximately 95% of max standard Proctor density at optimum moisture

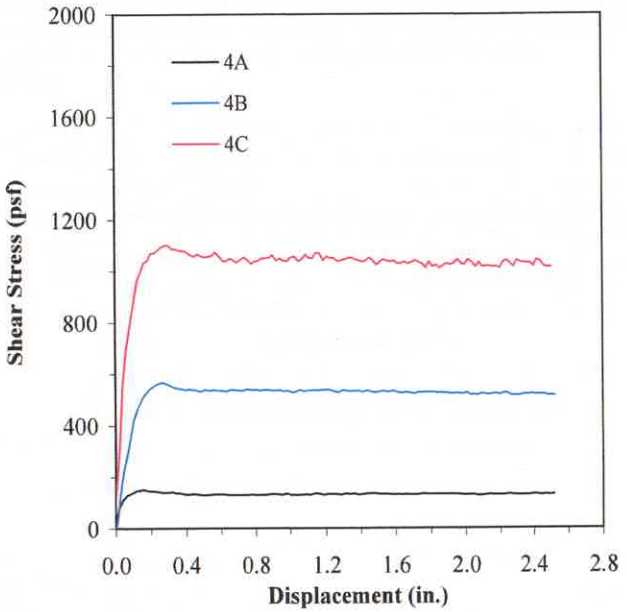

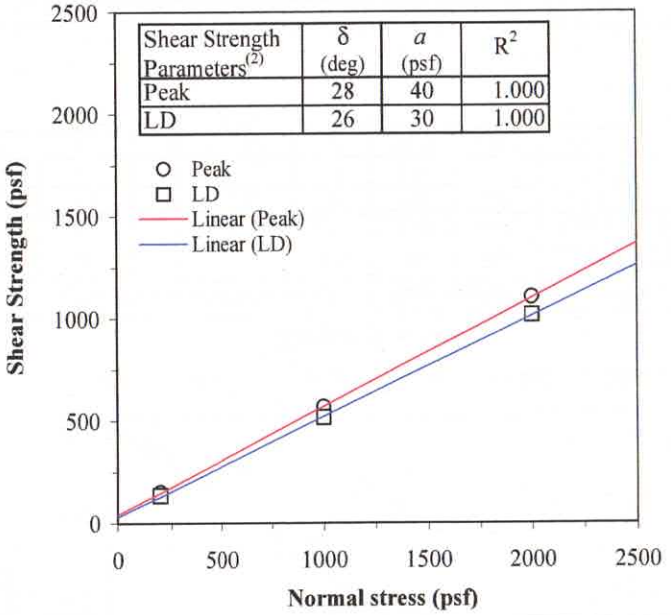

Shear Strength Parameters[2]	δ (deg)	a (psf)	R^2
Peak	28	40	1.000
LD	26	30	1.000

Test No.	Shear Box Size (in. x in.)	Normal Stress (psf)	Shear Rate (in./min)	Soaking Stress (psf)	Soaking Time (hour)	Consolidation Stress (psf)	Consolidation Time (hour)	Soil Compaction γ_d (pcf)	ω_i (%)	ω_f (%)	Soil Shear Strength Parameters ϕ_P (deg)	c_P (psf)	ϕ_{LD} (deg)	c_{LD} (psf)	Shear Strength[1] τ_P (psf)	τ_{LD} (psf)	Coefficient of Direct Sliding C_{DS-P}	C_{DS-LD}
4A	12 x 12	200	0.04	-	-	-	-	103.9	10.7	10.2	37	55	34	40	149	132	0.72	0.76
4B	12 x 12	1000	0.04	-	-	-	-	104.3	10.3	10.1	37	55	34	40	568	515	0.70	0.72
4C	12 x 12	2000	0.04	-	-	-	-	104.1	10.5	10.4	37	55	34	40	1102	1016	0.71	0.73

NOTES:

(1) Sliding (i.e., shear failure) occurred at intended test interface in each test.

(2) The reported total-stress parameters of friction angle and adhesion were determined from a best-fit line drawn through the test data. Caution should be exercised in using these strength parameters for applications involving normal stresses outside the range of the stresses covered by the test series. The large-displacement (LD) shear strength was calculated using the shear force measured at the end of the test.

DATE OF REPORT:	6/30/2008
FIGURE NO.	C-4
PROJECT NO.	SGI7018
DOCUMENT NO.	SGI08023
FILE NO.	

SGI TESTING SERVICES, LLC

LINEAR COMPOSITES, LTD

INTERFACE DIRECT SHEAR TESTING (ASTM D 5321)

Upper Shear Box: Concrete sand compacted to approximately 95% of max standard Proctor density at optimum moisture against 30 kN Paraweb Style 2E+ (100% coverage)

Lower Shear Box: Concrete sand compacted to approximately 95% of max standard Proctor density at optimum moisture

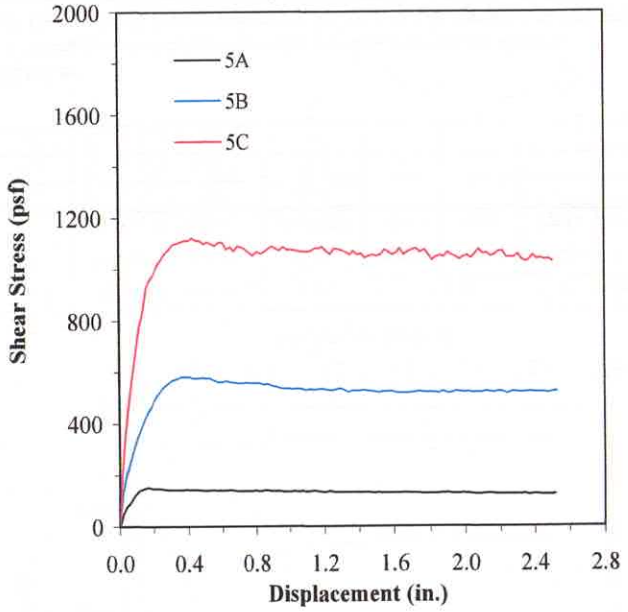

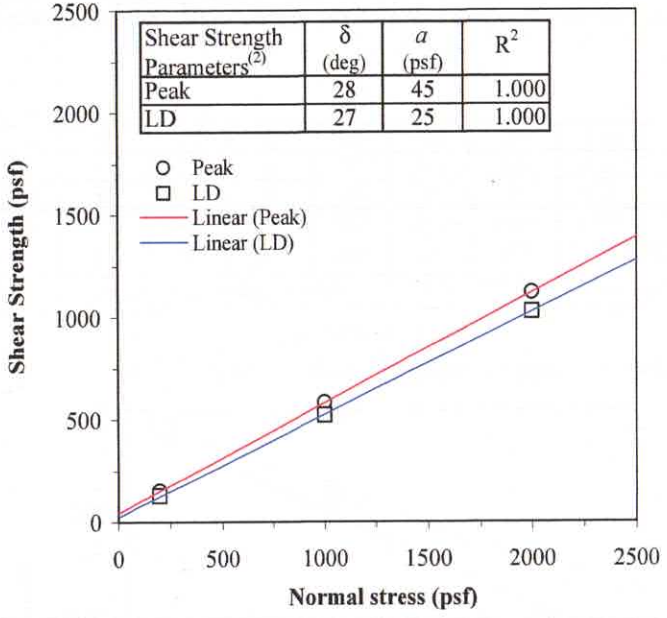

Shear Strength Parameters[2]	δ (deg)	a (psf)	R^2
Peak	28	45	1.000
LD	27	25	1.000

Test No.	Shear Box Size (in. x in.)	Normal Stress (psf)	Shear Rate (in./min)	Soaking Stress (psf)	Soaking Time (hour)	Consolidation Stress (psf)	Consolidation Time (hour)	Soil Compaction γ_d (pcf)	Soil Compaction ω_i (%)	Soil Compaction ω_f (%)	Soil Shear Strength Parameters ϕ_P (deg)	c_P (psf)	ϕ_{LD} (deg)	c_{LD} (psf)	Shear Strength[1] τ_P (psf)	τ_{LD} (psf)	Coefficient of Direct Sliding C_{DS-P}	C_{DS-LD}
5A	12 x 12	200	0.04	-	-	-	-	103.4	11.2	10.8	37	55	34	40	152	126	0.74	0.72
5B	12 x 12	1000	0.04	-	-	-	-	103.9	10.7	10.9	37	55	34	40	582	522	0.72	0.73
5C	12 x 12	2000	0.04	-	-	-	-	103.7	10.9	10.3	37	55	34	40	1122	1028	0.72	0.74

NOTES:

(1) Sliding (i.e., shear failure) occurred at intended test interface in each test.

(2) The reported total-stress parameters of friction angle and adhesion were determined from a best-fit line drawn through the test data. Caution should be exercised in using these strength parameters for applications involving normal stresses outside the range of the stresses covered by the test series. The large-displacement (LD) shear strength was calculated using the shear force measured at the end of the test.

DATE OF REPORT:	6/30/2008
FIGURE NO.	C-5
PROJECT NO.	SGI7018
DOCUMENT NO.	SGI08023
FILE NO.	

SGI TESTING SERVICES, LLC

LINEAR COMPOSITES, LTD

INTERFACE DIRECT SHEAR TESTING (ASTM D 5321)

Upper Shear Box: Silty sand compacted to approximately 95% of max standard Proctor density at optimum moisture against 30 kN Paraweb Style 2D (100% coverage)

Lower Shear Box: Silty sand compacted to approximately 95% of max standard Proctor density at optimum moisture

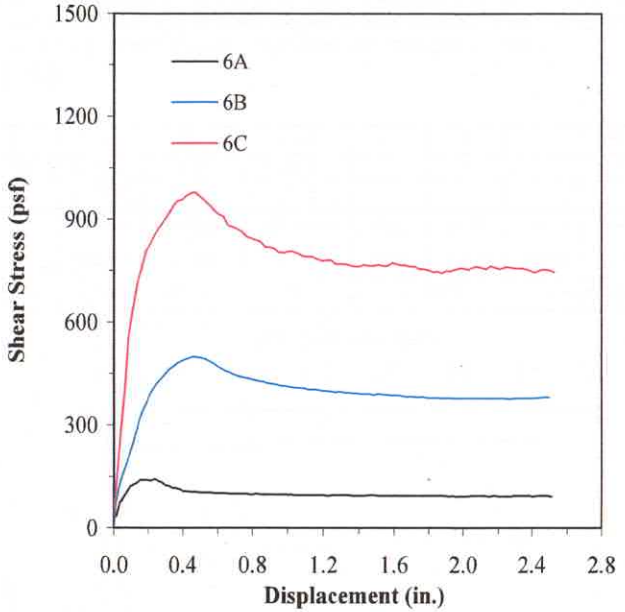

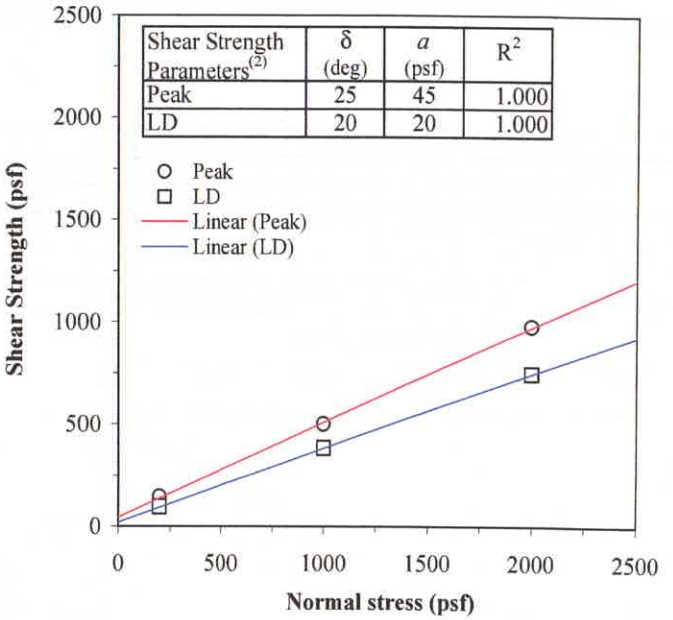

Shear Strength Parameters[2]	δ (deg)	a (psf)	R^2
Peak	25	45	1.000
LD	20	20	1.000

Test No.	Shear Box Size (in. x in.)	Normal Stress (psf)	Shear Rate (in./min)	Soaking		Consolidation		Soil Compaction			Soil Shear Strength Parameters				Shear Strength[1]		Coefficient of Direct Sliding	
				Stress (psf)	Time (hour)	Stress (psf)	Time (hour)	γ_d (pcf)	ω_i (%)	ω_f (%)	ϕ_P (deg)	c_P (psf)	ϕ_{LD} (deg)	c_{LD} (psf)	τ_P (psf)	τ_{LD} (psf)	C_{DS-P}	C_{DS-LD}
6A	12 x 12	200	0.04	-	-	-	-	93.4	19.2	19.0	32	75	31	30	142	93	0.71	0.62
6B	12 x 12	1000	0.04	-	-	-	-	93.1	19.6	19.1	32	75	31	30	499	382	0.71	0.61
6C	12 x 12	2000	0.04	-	-	-	-	94.1	18.4	18.5	32	75	31	30	979	746	0.74	0.61

NOTES:

(1) Sliding (i.e., shear failure) occurred at intended test interface in each test.

(2) The reported total-stress parameters of friction angle and adhesion were determined from a best-fit line drawn through the test data. Caution should be exercised in using these strength parameters for applications involving normal stresses outside the range of the stresses covered by the test series. The large-displacement (LD) shear strength was calculated using the shear force measured at the end of the test.

SGI TESTING SERVICES, LLC

DATE OF REPORT:	6/30/2008
FIGURE NO.	C-6
PROJECT NO.	SGI7018
DOCUMENT NO.	SGI08023
FILE NO.	

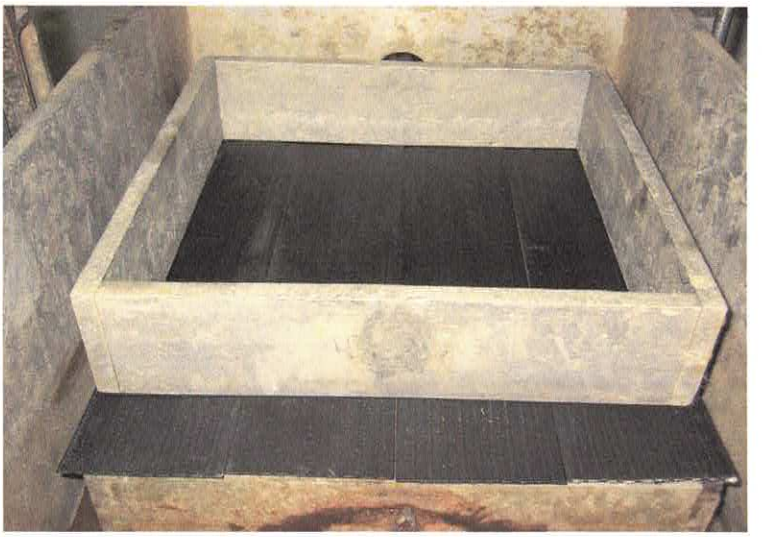

Figure 1. 100% coverage achieved by placing 4 Parawebs side by side and no gaps between Parawebs

Figure 2. Soil placed in the upper shear box and compacted on top of Parawebs to a specified unit weight

1.3.1 OTHER INNOVATIONS

No attachments

© Stone Strong Systems

1.3.2 REINFORCED SOIL

No attachments

© Stone Strong Systems

1.3.3 DRAINAGE

No attachments

© Stone Strong Systems

1.3.4 COPING

No attachments

© Stone Strong Systems

1.3.5 TRAFFIC BARRIERS

Barrier & Coping w/ Coping Skirt
Barrier & Coping
Custom Top Unit – Barrier
Custom Top Unit – Barrier w/ Skirt

© Stone Strong Systems

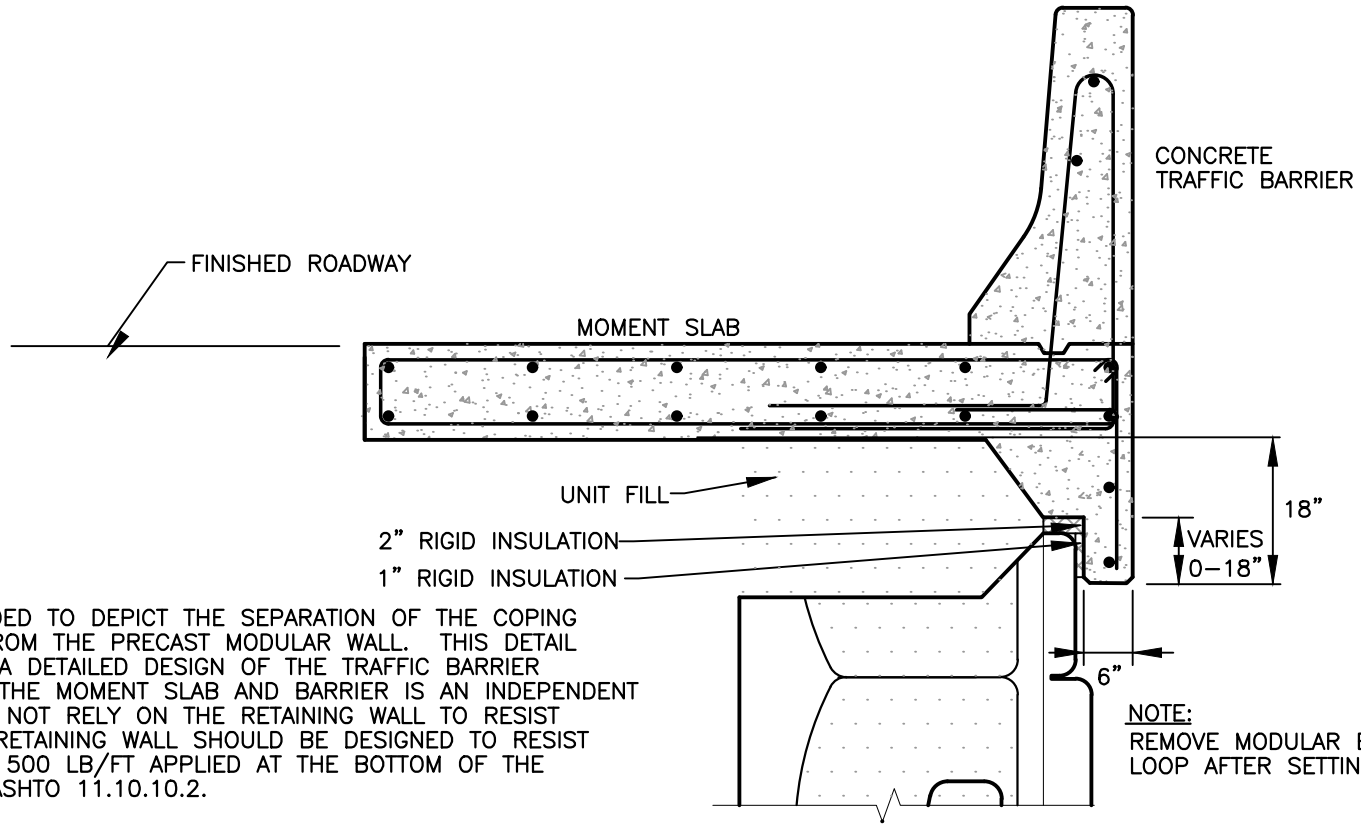

THIS DETAIL IS INTENDED TO DEPICT THE SEPARATION OF THE COPING AND MOMENT SLAB FROM THE PRECAST MODULAR WALL. THIS DETAIL IS NOT INTENDED AS A DETAILED DESIGN OF THE TRAFFIC BARRIER AND MOMENT SLAB. THE MOMENT SLAB AND BARRIER IS AN INDEPENDENT DESIGN, AND SHOULD NOT RELY ON THE RETAINING WALL TO RESIST CRASH LOADS. THE RETAINING WALL SHOULD BE DESIGNED TO RESIST A LATERAL FORCE OF 500 LB/FT APPLIED AT THE BOTTOM OF THE MOMENT SLAB PER AASHTO 11.10.10.2.

NOTE:
REMOVE MODULAR BLOCK LIFTING LOOP AFTER SETTING UNIT

BARRIER & COPING W/ COPING SKIRT

NOT TO SCALE

DISCLAIMER:
These typical details are preliminary and conceptual in nature. They are provided for general information purposes only. Anyone making use of these details and related information does so at their own risk and assumes all liability for such use. Site specific design should be performed by a licensed Professional Engineer based on actual site conditions, materials, and local practices.

Stone Strong LLC retains al common law, statutory, and other reserved rights to these drawings including the copyright. Limited license is granted to copy, reproduce, or modify the details to prepare construction drawings for Stone Strong retaining walls. Stone Strong LLC makes no warranties, either expressed or implied, of merchantability or fitness for any particular purpose, and accepts no responsibility for the accuracy, suitability, or completeness of information contained herein.

STONE STRONG SYSTEMS®

www.stonestrong.com

PROJECT

TYPICAL DETAILS
STONE STRONG SYSTEMS

DATE: 4/13/20 | FILE: Barrier_Coping_W/S

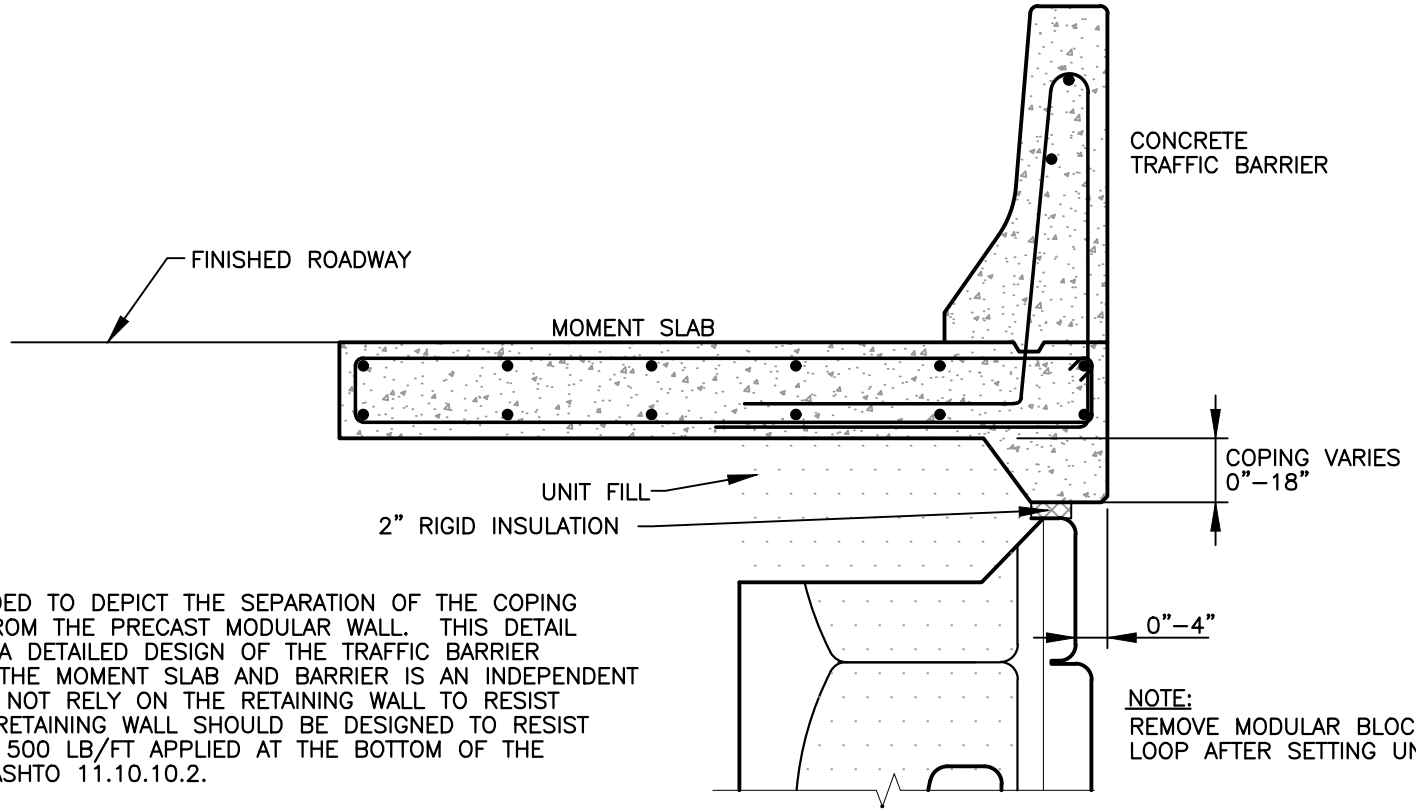

THIS DETAIL IS INTENDED TO DEPICT THE SEPARATION OF THE COPING AND MOMENT SLAB FROM THE PRECAST MODULAR WALL. THIS DETAIL IS NOT INTENDED AS A DETAILED DESIGN OF THE TRAFFIC BARRIER AND MOMENT SLAB. THE MOMENT SLAB AND BARRIER IS AN INDEPENDENT DESIGN, AND SHOULD NOT RELY ON THE RETAINING WALL TO RESIST CRASH LOADS. THE RETAINING WALL SHOULD BE DESIGNED TO RESIST A LATERAL FORCE OF 500 LB/FT APPLIED AT THE BOTTOM OF THE MOMENT SLAB PER AASHTO 11.10.10.2.

BARRIER & COPING

NOT TO SCALE

DISCLAIMER:

These typical details are preliminary and conceptual in nature. They are provided for general information purposes only. Anyone making use of these details and related information does so at their own risk and assumes all liability for such use. Site specific design should be performed by a licensed Professional Engineer based on actual site conditions, materials, and local practices.

Stone Strong LLC retains al common law, statutory, and other reserved rights to these drawings including the copyright. Limited license is granted to copy, reproduce, or modify the details to prepare construction drawings for Stone Strong retaining walls. Stone Strong LLC makes no warranties, either expressed or implied, of merchantability or fitness for any particular purpose, and accepts no responsibility for the accuracy, suitability, or completeness of information contained herein.

STONE STRONG SYSTEMS®

www.stonestrong.com

PROJECT

TYPICAL DETAILS
STONE STRONG SYSTEMS

DATE: 4/13/20 | FILE: Barrier_Coping

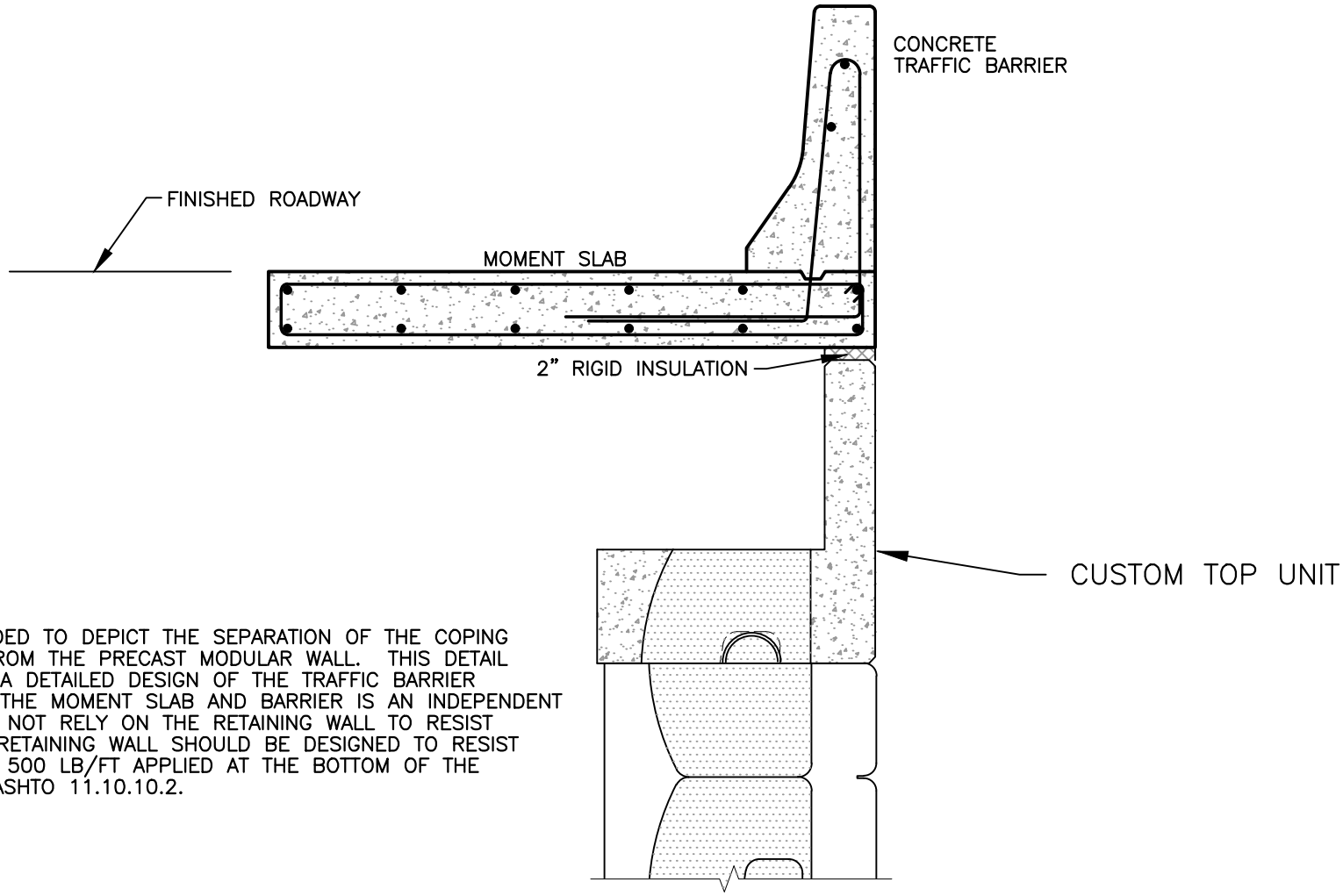

THIS DETAIL IS INTENDED TO DEPICT THE SEPARATION OF THE COPING AND MOMENT SLAB FROM THE PRECAST MODULAR WALL. THIS DETAIL IS NOT INTENDED AS A DETAILED DESIGN OF THE TRAFFIC BARRIER AND MOMENT SLAB. THE MOMENT SLAB AND BARRIER IS AN INDEPENDENT DESIGN, AND SHOULD NOT RELY ON THE RETAINING WALL TO RESIST CRASH LOADS. THE RETAINING WALL SHOULD BE DESIGNED TO RESIST A LATERAL FORCE OF 500 LB/FT APPLIED AT THE BOTTOM OF THE MOMENT SLAB PER AASHTO 11.10.10.2.

CUSTOM TOP UNIT–BARRIER & COPING

NOT TO SCALE

DISCLAIMER:

These typical details are preliminary and conceptual in nature. They are provided for general information purposes only. Anyone making use of these details and related information does so at their own risk and assumes all liability for such use. Site specific design should be performed by a licensed Professional Engineer based on actual site conditions, materials, and local practices.

Stone Strong LLC retains al common law, statutory, and other reserved rights to these drawings including the copyright. Limited license is granted to copy, reproduce, or modify the details to prepare construction drawings for Stone Strong retaining walls. Stone Strong LLC makes no warranties, either expressed or implied, of merchantability or fitness for any particular purpose, and accepts no responsibility for the accuracy, suitability, or completeness of information contained herein.

STONE STRONG SYSTEMS®

www.stonestrong.com

PROJECT

TYPICAL DETAILS
STONE STRONG SYSTEMS

DATE: 4/6/20 | FILE: CT– Barrier_Coping

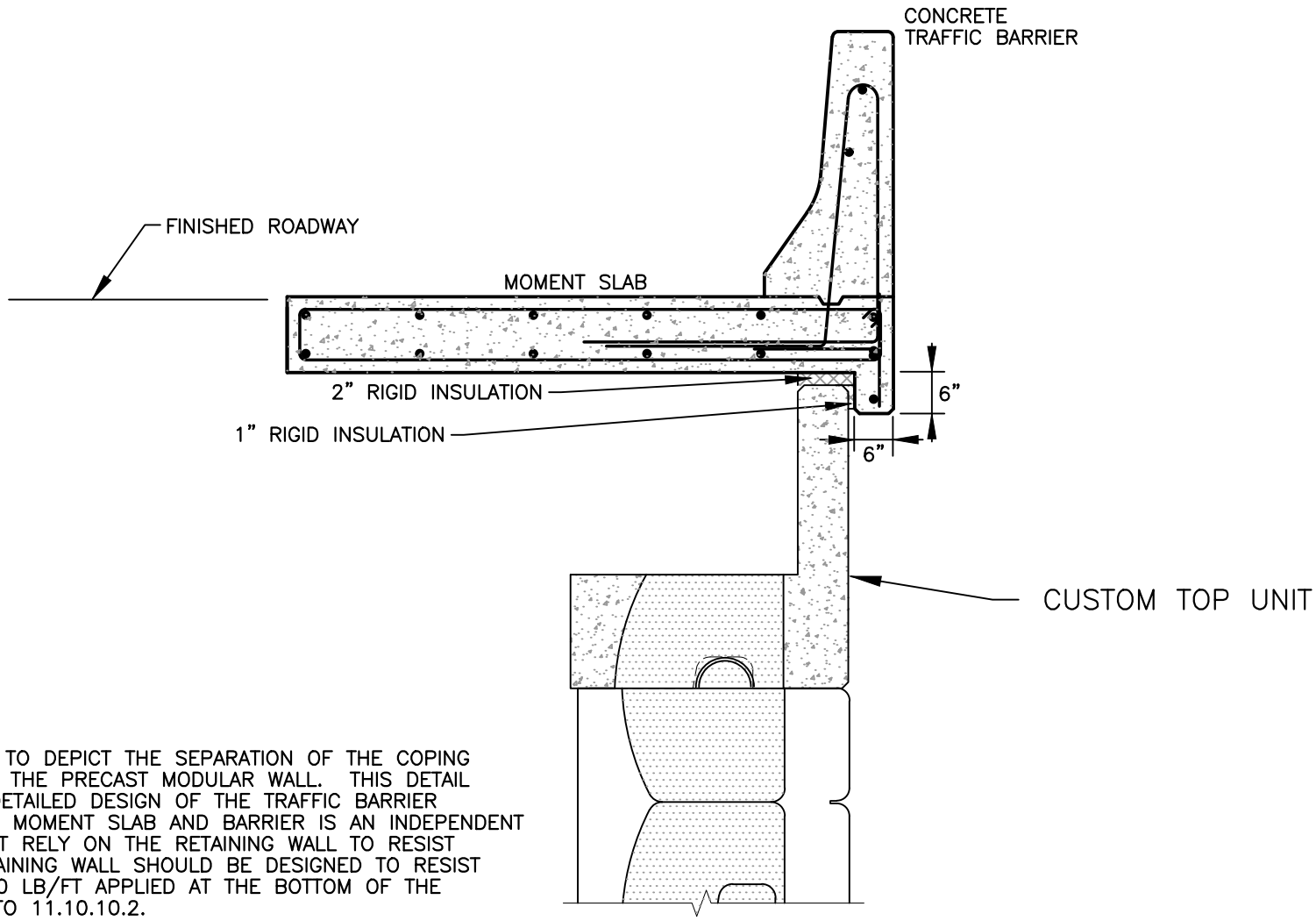

THIS DETAIL IS INTENDED TO DEPICT THE SEPARATION OF THE COPING AND MOMENT SLAB FROM THE PRECAST MODULAR WALL. THIS DETAIL IS NOT INTENDED AS A DETAILED DESIGN OF THE TRAFFIC BARRIER AND MOMENT SLAB. THE MOMENT SLAB AND BARRIER IS AN INDEPENDENT DESIGN, AND SHOULD NOT RELY ON THE RETAINING WALL TO RESIST CRASH LOADS. THE RETAINING WALL SHOULD BE DESIGNED TO RESIST A LATERAL FORCE OF 500 LB/FT APPLIED AT THE BOTTOM OF THE MOMENT SLAB PER AASHTO 11.10.10.2.

CUSTOM TOP UNIT & COPING W/ COPING SKIRT

NOT TO SCALE

DISCLAIMER:

These typical details are preliminary and conceptual in nature. They are provided for general information purposes only. Anyone making use of these details and related information does so at their own risk and assumes all liability for such use. Site specific design should be performed by a licensed Professional Engineer based on actual site conditions, materials, and local practices.

Stone Strong LLC retains al common law, statutory, and other reserved rights to these drawings including the copyright. Limited license is granted to copy, reproduce, or modify the details to prepare construction drawings for Stone Strong retaining walls. Stone Strong LLC makes no warranties, either expressed or implied, of merchantability or fitness for any particular purpose, and accepts no responsibility for the accuracy, suitability, or completeness of information contained herein.

STONE STRONG SYSTEMS®

www.stonestrong.com

PROJECT

TYPICAL DETAILS
STONE STRONG SYSTEMS

DATE: 4/6/20 | FILE: CT-Barrier_Coping_W

1.3.6 SLIP JOINTS

Slip Joint Detail

© Stone Strong Systems

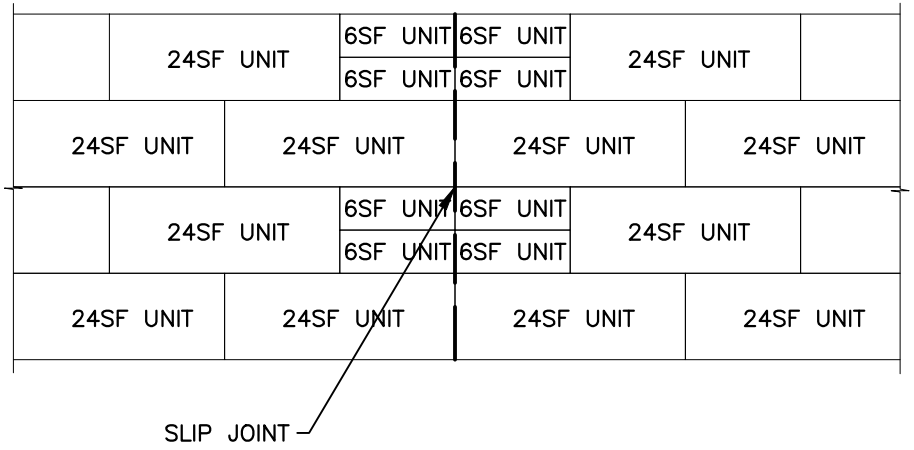

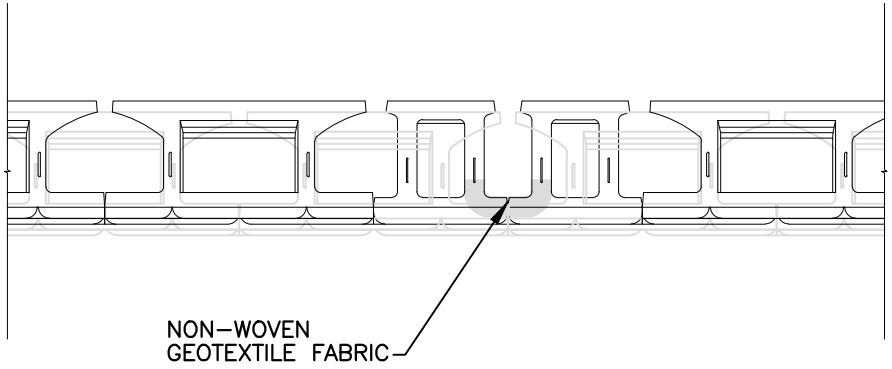

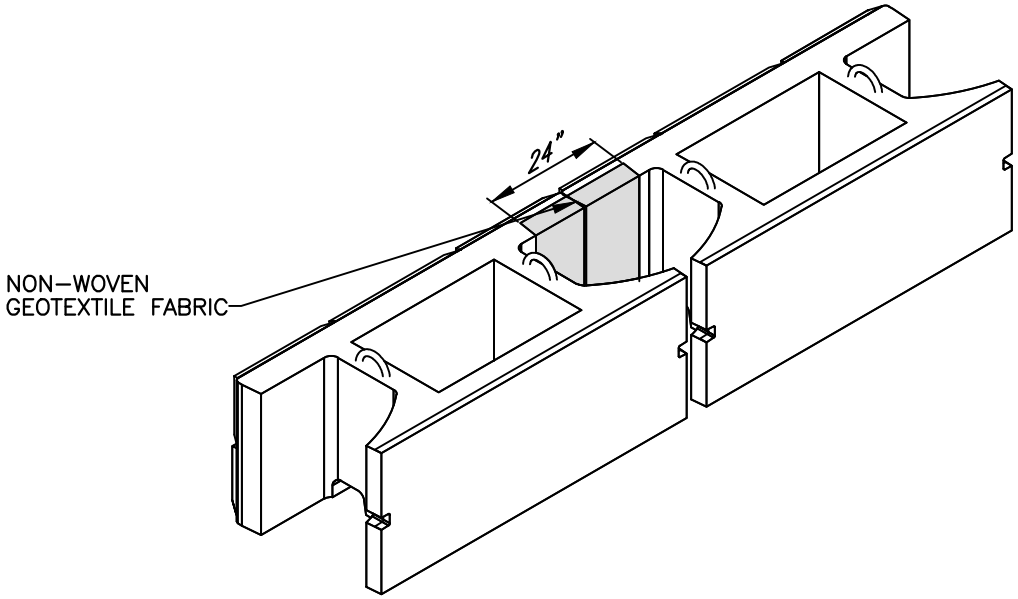

DISCLAIMER:

These typical details are preliminary and conceptual in nature. They are provided for general information purposes only. Anyone making use of these details and related information does so at their own risk and assumes all liability for such use. Site specific design should be performed by a licensed Professional Engineer based on actual site conditions, materials, and local practices.

Stone Strong LLC retains al common law, statutory, and other reserved rights to these drawings including the copyright. Limited license is granted to copy, reproduce, or modify the details to prepare construction drawings for Stone Strong retaining walls. Stone Strong LLC makes no warranties, either expressed or implied, of merchantability or fitness for any particular purpose, and accepts no responsibility for the accuracy, suitability, or completeness of information contained herein.

STONE STRONG SYSTEMS®

www.stonestrong.com

PROJECT

SLIP JOINT DETAIL
STONE STRONG SYSTEMS

DATE: 3/30/20 | FILE: SLIP JOINT DETAIL

2.1.1 DESIGN INNOVATIONS

click here to request download of Gravity Analysis spreadsheet

© Stone Strong Systems

2.1.2 DESIGN METHODOLOGIES

Gravity Wall Design - LRFD Cover Sheet
LRFD Gravity Wall Design Methodology
Example LRFD Gravity Wall Calculations
Example LRFD Spreadsheet Output

© Stone Strong Systems

Project	Project #	Date
Gravity Wall Design - LRFD	20004.00	2/20/20

GRAVITY WALL DESIGN - LRFD

STONE STRONG PRECAST MODULAR BLOCK

This engineering section presents information for design of Stone Strong retaining walls in a gravity configuration using Load and Resistance Factor Design (LRFD) procedures.

The design methodologies presented conform substantially to AASHTO specifications (LRFD Bridge Specifications, 8th Edition, 2017). This section includes the following documents:

LRFD Gravity Wall Design Methodology (17 pages)
Example LRFD Gravity Wall Calculations (20 pages)
Example LRFD Spreadsheet Output (12 pages)

The example calculations and example spreadsheet output match identical design conditions and are intended as verification of the spreadsheet method. Note that the Gravity Analysis Spreadsheet is available on the Stone Strong website.

Project	Project #	Date
LRFD Design Methodology	20004.00	2/20/20

GRAVITY WALL LRFD DESIGN METHODOLOGY

STONE STRONG PRECAST MODULAR BLOCK

Evaluate gravity retaining wall using strength design approach (Load and Resistance Factor Design) following AASHTO analytical techniques – refer to:

AASHTO LRFD Bridge Design Specifications, 8th Edition 2017

Additional analytical methods and theories are taken from previous AASHTO specifications and other FHWA guidelines – refer to:

Design and Construction of Mechanically Stabilized Earth Walls and Reinforced Soil Slopes, NHI-10-024

AASHTO Standard Specifications for Highway Bridges 2002, 17th Addition

Properties of Soil/Aggregate

Soil and material properties should be determined for the specific materials to be used:

unit fill - γ_u = 110 pcf (17.3 kN/m^3) max (see AASHTO 2002 5.9.2) & ϕ_u

leveling base –γ_b & ϕ_b for typical aggregate base (or concrete base may be substituted)

retained soil - γ & ϕ by site conditions (where select backfill is used, select material must encompass entire retained soil influence zone)

foundation soil - γ ϕ & c by site conditions

interface angle (see AASHTO LRFD Table C3.11.5.9-1)

For stepped modules, when the block width varies within a vertical section, $\delta = ¾\ \phi$

For cases where all blocks are substantially uniform width, $\delta = ½\ \phi$

Note: infill weight is reduced to account for infill not engaged by modular units in overturning. Only 80% of the weight of aggregate is included in the overturning calculations, W' (see AASHTO LRFD 11.11.4.4)

Project	Project #	Date
LRFD Design Methodology	20004.00	2/20/20

Precast Modular Unit Geometric Properties

(not all units available from all dealers, verify availability)

Block Library – Imperial Units

(not all units available from all dealers, verify availability)

Block Type	Description	Conc. Wt. (lbs)	Void Vol. (ft^3)	Length (ft)	Height (ft)	Unit Width (in)	Conc. Cen. of Gravity x_b (in)	Void Cen. of Gravity x_a (in)
6-28	6SF-28 unit (6 square feet)	950	6.65	4	1.50	28	12.8	14.0
6SF	6SF unit (6 square feet)	1,500	10.95	4	1.50	44	21.0	23.5
24SF	24SF unit (24 square feet)	6,000	43.21	8	3.00	44	21.2	24.8
24-ME	24SF Mass Extender unit	10,000	44.94	8	3.00	56	32.7	25.8
24-62	24SF-62 unit	6,800	76.05	8	3.00	62	29.1	33.0
24-86	24SF-86 unit	7,600	117.90	8	3.00	86	40.0	45.1

dimensions are for battered units - for vertical stack 24SF units, the width and center of gravity dimensions are all reduced by 1 inch

Block Library – Metric Units

(not all units available from all dealers, verify availability)

Block Type	Description	Conc. Wt. (kN)	Void Vol. (m^3)	Length (m)	Height (m)	Unit Width (mm)	Conc. Cen. of Gravity x_b (mm)	Void Cen. of Gravity x_a (mm)
6-28	6SF-28 unit (6 square feet)	4.23	0.19	1.22	0.46	711	324	356
6SF	6SF unit (6 square feet)	6.67	0.31	1.22	0.46	1,118	533	597
24SF	24SF unit (24 square feet)	26.69	1.22	2.44	0.91	1,118	538	630
24-ME	24SF Mass Extender unit	44.48	1.28	2.44	0.91	1,422	831	655
24-62	24SF-62 unit	30.25	2.16	2.44	0.91	1,575	739	838
24-86	24SF-86 unit	33.8	3.35	2.44	0.91	2,184	1,016	1,146

dimensions are for battered units - for vertical stack 24SF units, the width and center of gravity dimensions are all reduced by 25 mm

Wall stability calculations are performed per unit length of wall, so all weights and forces are expressed per foot or m of wall length.

Project	Project #	Date
LRFD Design Methodology	20004.00	2/20/20

Typical gravity wall configuration with precast stepped modules, variables, and nomenclature:

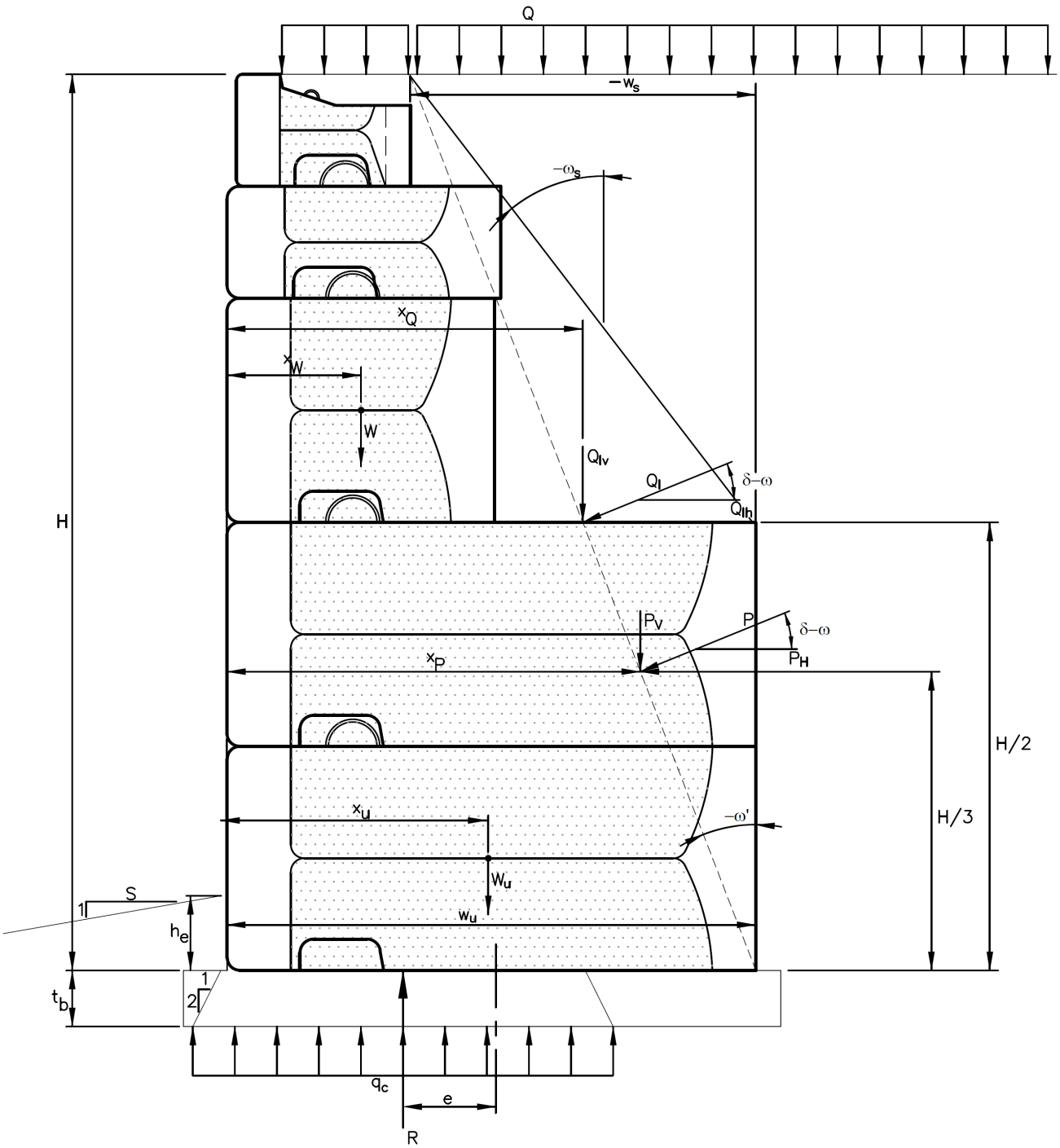

Note that surcharge loads over the top of the wall are treated separately from surcharge behind the wall.

Project	Project #	Date
LRFD Design Methodology	20004.00	2/20/20

Typical gravity wall with cast in place tail extension, variables, and nomenclature:

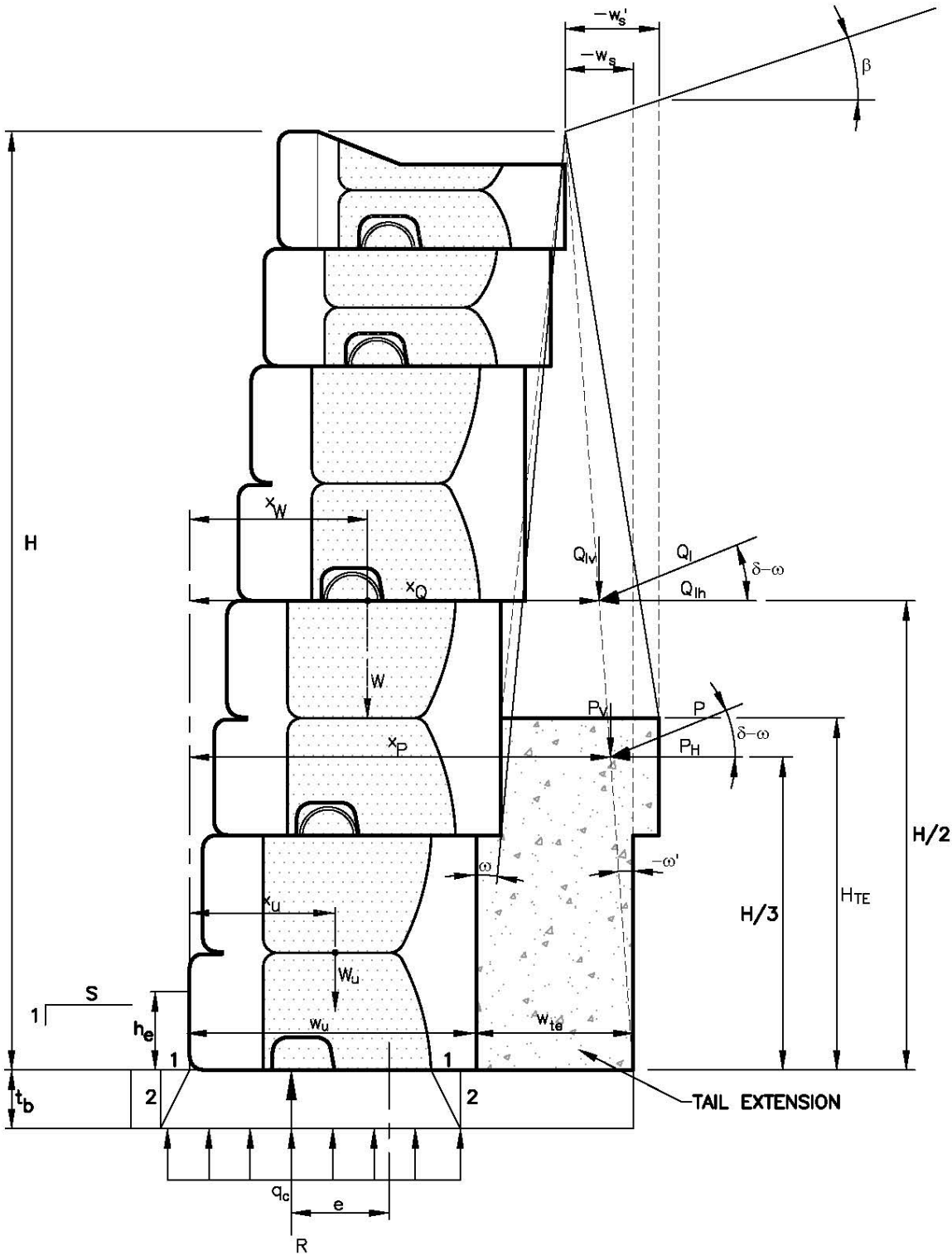

Wall units that vary in width are referred to as “stepped” modules. Wider wall units are typically placed at the bottom of the wall. In addition to using wider precast units, the stability of a gravity wall can be improved by using cast-in-place tail extensions to increase the width of the units. The width of the CIP extension is not limited, but it is recommend that the height be at least 2 times the width to provide shear through the tail openings (unless connecting with reinforcing steel).

Wall batter

The block units may be installed with either a vertical face or a battered face. In vertical applications, the units are be installed with no batter or setback between units, $\omega = 0°$

In a battered configuration, the 24 SF, 24-62, 24-86, and 24-ME units are 36 inches (914 mm) high and the next block atop a 24 SF block will batter back 4 inches (102 mm). The 6 SF and 6-28 units are 18 inches (457 mm) tall, and the next block atop a 6 SF block will batter 2 inches (51 mm). These blocks may be interchanged within a wall stack, but the batter is determined by the height of the unit below.

4 in. setback per 24 SF block (36 in. tall)	102 mm setback per 24SF block (914 mm tall)
2 in. setback per 6 SF block (18 in. tall)	51 mm setback per 6SF block (457 mm tall)

The face batter is calculated as:

ω = arctan(4/36) = 6.34°	ω = arctan(102/914) = 6.34°
or ω = arctan(2/18) = 6.34°	ω = arctan(51/457) = 6.34°

For uniform modules, the batter of the back face matches the batter of the front face. For stepped modules, the batter is recalculated along the back of the wall from the rear of the bottom unit to the rear of the top of the wall. Use ω’ in Coulomb equation and earth pressure component calculations. To calculate ω’ it is necessary to know the effective setback width, w_s, which is the horizontal distance between the back edge of the top block and the back edge of the lower unit including any tail extension. w_s is negative when the mass extender projects further than the back of the top block. Knowing this distance and the height of wall:

$\omega' = \arctan(w_s / H_w)$

Base Thickness/Embedment

The type and thickness of wall base or leveling pad and depth of embedment can vary by site requirements. A granular base with a thickness of 9 inches is commonly used, but the thickness can be adjusted to reduce the contact pressure. A concrete leveling pad or footing can also be used. The required embedment to the top of the base is related to the exposed height of the wall and by the slope at the toe, as well as other factors. The required embedment can be calculated for slopes steeper than 6H:1V using the following equation (see AASHTO LRFD Table C11.10.2.2-1):

$h_e = H'/(20*S/6)$

where S is the run of the toe slope per unit fall and H’ is the exposed height

A minimum embedment of 12 inches (300 mm) for level toe and 24 inches (600 mm) for toe slopes of 4H:1V or steeper is recommended for highway applications (AASHTO LRFD 11.10.2.2)

Weight of Wall

The weight of the wall includes the contributions of the blocks, the aggregate unit fill, the tail extension, and the soil wedge atop extended modules or tail extension

The weight of the tail extension is calculated:

$W_{te} = (w_{te} * H_{te}) * 145$ pcf (22.8 kN/m^3) (typical unit weight for concrete)

where w_{te} is the width of the tail extension and H_{te} is the height of the extension (both in ft.)

The angle of the batter (from vertical) of the soil wedge above the tail extension, ω_s, is calculated:

$\omega_s = \arctan(-w_s'/H_{wedge})$

The weight of soil in the wedge above the tail extension is calculated for the trapezoidal area of the wedge that lies behind each block

h_s = height of the soil trapezoid behind the block (may differ from height of the block)

w_u = width of the block

h_1 = dist. from the top of wall to top of the soil trapezoid behind the block

h_2 = dist. from the top of wall to bottom of the soil trapezoid behind the block

s = dist. from the face of wall to face of the block

s_u = dist. from the face of wall to back of the block = $s + w_u$

s_T = dist. from the face of wall to the back of top-most block of wall

b_1 = length of top side of trapezoid of soil behind block = $h_1 * \tan(\omega_s)+(s_T - s_u)$

b_2 = length of bottom side of trapezoid of soil behind block = $h_2 * \tan(\omega_s)+(s_T - s_u)$

The weight of the soil wedge above the tail extension behind each block, W_s, is calculated as the trapezoidal area multiplied by the lesser of the unit weight of the retained soil or the unit fill:

$W_s = [h_s * (b_1+b_2)/2] *$ (min of γ_{ret} or γ_u)

The center of gravity of the trapezoidal wedge behind each block, measured from the face of the wall at the bottom course, is calculated:

$x_s = [(b_1*b_2+(b_2^2-2*b_1*b_2+b_1^2)/3)/(b_1+b_2)]+ s + w_u$

$y_s = [h_s/3*(2b_1+b_2)/(b_1+b_2)]+ H - h_2$

W_s is treated as aggregate infill subject to 80% limitations for overturning calculations (conservative)

Project	Project #	Date
LRFD Design Methodology	20004.00	2/20/20

Static Forces

Coulomb active earth pressure coefficient (see AASHTO LRFD 3.11.5.3)

$$K_a = \frac{\cos^2(\phi + \omega')}{\cos^2(\omega')\cos(\omega' - \delta)\left[1 + \sqrt{\frac{\sin(\phi + \delta)\sin(\phi - \beta)}{\cos(\omega' - \delta)\cos(\omega' + \beta)}}\right]^2}$$

As an alternate, a trial wedge technique may be used to determine the earth pressure forces acting on the modular wall.

Earth Load Components (see AASHTO LRFD 11.10.5.2)

Vertical forces:

$P_v = 0.5\ K_a\ \gamma\ H^2 * \sin(\delta - \omega')$

$Q_{lv} = K_a\ Q\ H * \sin(\delta - \omega')$ where Q is the effective surcharge in psf (kPa)

Horizontal forces:

$P_h = 0.5\ K_a\ \gamma\ H^2 * \cos(\delta - \omega')$

$Q_{lh} = K_a\ Q\ H * \cos(\delta - \omega')$ where Q is the effective surcharge in psf (kPa)

Resultants of earth load components:

$y_P = H/3$

$x_P = (H/3) * \tan(\omega') + w_u$

$y_{Ql} = H/2$

$x_{Ql} = (H/2) * \tan(\omega') + w_u$

where w_u is the width of the bottom unit, including any tail extension (w_{te})

Weight Components

Vertical forces:

W_b – Weight of wall units

W_{te} – Weight of concrete tail extension, if used

W_a – Weight of infill aggregate (use 80% aggregate weight for overturning)

W_s – Weight of soil atop tail extension (use 80% aggregate weight for overturning)

$$W_b = \sum(W_{b1} + W_{b2} + \cdots\cdots + W_{bn})$$

$$W_{te} = \sum(W_{te1} + W_{te2} + \cdots\cdots + W_{te})$$

$$W_a = \sum(W_{a1} + W_{a2} + \cdots\cdots + W_{an})$$

$$W_s = \sum(W_{s1} + W_{s2} + \cdots\cdots + W_{sn})$$

Resultants of weight components:

The center of mass of the stack of blocks is calculated as:

$$x_b = \sum(W_{b1}*x_{b1} + W_{b2}*x_{b2} + \cdots\cdots + W_{bn}*x_{bn}) / \sum(W_{b1} + W_{b2} + \cdots\cdots + W_{bn})$$

$$y_b = \sum(W_{b1}*y_{b1} + W_{b2}*y_{b2} + \cdots\cdots + W_{bn}*y_{bn}) / \sum(W_{b1} + W_{b2} + \cdots\cdots + W_{bn})$$

The center of mass of the aggregate fill is:

$$x_a = \sum(W_{a1}*x_{a1} + W_{a2}*x_{a2} + \cdots\cdots + W_{an}*x_{an}) / \sum(W_{a1} + W_{a2} + \cdots\cdots + W_{an})$$

$$y_a = \sum(W_{a1}*y_{a1} + W_{a2}*y_{a2} + \cdots\cdots + W_{an}*y_{an}) / \sum(W_{a1} + W_{a2} + \cdots\cdots + W_{an})$$

The center of mass of the soil wedge over the tail is:

$$x_s = \sum(W_{s1}*x_{s1} + W_{s2}*x_{s2} + \cdots\cdots + W_{sn}*x_{sn}) / \sum(W_{s1} + W_{s2} + \cdots\cdots + W_{sn})$$

$$y_s = \sum(W_{s1}*y_{s1} + W_{s2}*y_{s2} + \cdots\cdots + W_{sn}*y_{sn}) / \sum(W_{s1} + W_{s2} + \cdots\cdots + W_{sn})$$

The center of mass of the tail extension can be calculated with the following equation:

$$x_{te} = \sum(W_{te1}*x_{te1} + W_{te2}*x_{te2} + \cdots\cdots + W_{ten}*x_{ten}) / \sum(W_{te1} + W_{te2} + \cdots\cdots + W_{te})$$

$$y_{te} = \sum(W_{te1}*y_{te1} + W_{te2}*y_{te2} + \cdots\cdots + W_{ten}*y_{ten}) / \sum(W_{te1} + W_{te2} + \cdots\cdots + W_{te})$$

The overall adjusted center of mass of the blocks and tail extension:

$$x_{b+te} = (W_b*x_b + W_{te}*x_{te}) / (W_b + W_{te})$$

$$y_{b+te} = (W_b*y_b + W_{te}*y_{te}) / (W_b + W_{te})$$

The overall adjusted center of mass of the aggregate and the soil above the tail is:

$$x_{a+s} = (W_a*x_a + W_s*x_s) / (W_a + W_s)$$

$$y_{a+s} = (W_a*y_a + W_s*y_s) / (W_a + W_s)$$

Project	Project #	Date
LRFD Design Methodology	20004.00	2/20/20

Seismic Loads

Seismic components of force are calculated according to the procedures in FHWA 4.2h.

The maximum acceleration A_m = (1.45 - A)*A where A is the peak horizontal ground acceleration.

The seismic earth pressure coefficient is calculated with the following equation:

$$K_{ae} = \frac{\cos^2(\phi + \omega' - \xi)}{\cos(\xi)\cos^2(-\omega')\cos(\delta - \omega' + \xi)\left[1 + \sqrt{\frac{\sin(\phi + \delta)\sin(\phi - \xi - \beta)}{\cos(\delta - \omega' + \xi)\cos(\omega' + \beta)}}\right]^2}$$

where $\xi = \arctan [k_h/(1 - k_v)]$

The trial wedge technique is recommended in high seismicity regions to determine the dynamic thrust forces acting on the modular wall.

Seismic Earth load components

k_v is generally taken as 0. k_h is the maximum horizontal acceleration of the wall, and is a function of the maximum allowable displacement of the wall during a seismic event. It is calculated with the following equation:

$$k_h = 1.66 * A_m * [A_m/(d*C)]^{0.25}$$

d is the maximum horizontal displacement, and is typically set at 2 inches (50 mm) as conservative. Note that this equation has embedded units of mm, and C is a conversion factor (25.4 when d is in units of inches, and 1 when d is in units of mm).

$$A_m = (1.45\text{-PGA})*\text{PGA}$$

The horizontal inertial force P_{ir} is calculated as follows:

$$P_{ir} = (W_b+W_{te}+W_a+W_s)*k_h$$

The seismic thrust is calculated as follows:

$$\Delta P_{ae} = 0.5 * \gamma * H^2 * (K_{ae} - K_a)$$

$$\Delta P_{aeh} = 0.5 * \gamma * H^2 * (K_{ae} - K_a) * \cos(\delta - \omega')$$

$$\Delta P_{aev} = 0.5 * \gamma * H^2 * (K_{ae} - K_a) * \sin(\delta - \omega')$$

Resultants of Seismic Earth load components

In overturning analysis, the inertial force is applied at the vertical center of gravity of the wall, while the seismic thrust is applied at 1/3 of the wall height.

$x_{Pae} = H/3*\tan(\omega') + w_u$

$y_{Pae} = H/3$

$y_{Pir} = (W_b*y_b + W_{te}*y_{te} + W_a*y_a + W_s*y_s) / (W_b + W_{te} + W_a + W_s)$

The combined earth pressure P_{ae} is the sum of the static earth pressure P_a and the seismic thrust ΔP_{ae}. By AASHTO LRFD requirements, two seismic load conditions must be evaluated (AASHTO LRFD 11.6.5.1):

$P_{ae}/2 + P_{ir} = P_a/2 + \Delta P_{ae}/2 + P_{ir}$ (but not less than $P_a + P_{ir}$)

$P_{ae} + P_{ir}/2 = P_a + \Delta P_{ae} + P_{ir}/2$

Load cases a & b are separately evaluated to include the alternate combinations above.

Base Friction

Friction across the base of the wall is used to resist sliding failure. Frictional resistance must be determined both between the wall assembly and the base and between the base and the foundation soil (or through the foundation soil).

The unfactored sliding resistance is calculated as the smaller result of the following equations:

For base to foundation soil failure, use:

$R_{s(foundation\ soil)} = (W_b + W_{te} + W_a + W_s + P_v + t_b*w_b*\gamma_b) \tan \phi + B_w*c$

$= (F_v+W_{base})* \tan \phi + B_w*c$

where ϕ represents foundation soils, B_w is base width (block width plus ½H:1V distribution through base), and c represents foundation soil cohesion.

For block to base material sliding, use:

$R_{s(footing)} = \mu_b (W_b + W_{te} + W_a + W_s + P_v) = \mu_b (F_v)$

where μ_b represents a composite coefficient of friction for the base

The composite friction coefficient is calculated using contributory areas. The base of a Stone Strong unit consists of a percentage of open void space to be filled with aggregate and a percentage of concrete. These percentages are calculated as follows:

$\%_{void} = V_{void}/(V_{void}+V_{concrete})$

$\%_{concrete} = V_{concrete}/(V_{void}+V_{concrete})$

If a cast-in-place tail extension is used, the area of the tail extension must also be calculated and the total area is also increased accordingly. Thus, the equation for composite friction coefficient across the base becomes:

$\mu_b = (\%_{void}*w_{u(bottom)}*\mu_{p\ -\ unit\ fill/base} + \%_{concrete}* w_{u(bottom)}*\mu_{p\ -\ block/base} + w_{te}*\mu_{p\ -\ extension/base})/(w_{u(bottom)} + w_{te})$

Project	Project #	Date
LRFD Design Methodology	20004.00	2/20/20

Partial friction coefficients can be interpreted from the following table:
(see AASHTO LRFD 10.6.3.4)

	Coefficient of Friction
Block to Aggregate Base formed precast surface on compacted aggregate surface (includes Mass Extender)	0.8*tan ϕ_b
Unit Fill to Aggregate Base screened aggregate (loose to moderate relative density - dumped) on compacted aggregate surface	lower tan ϕ_b or tan ϕ_u
Block to Concrete Base formed precast surface on floated concrete surface (includes Mass Extender)	0.60
Unit Fill Aggregate to Concrete Base screened aggregate (loose to moderate relative density - dumped) on floated concrete surface	0.8*tan ϕ_u
Concrete Tail Extension to Aggregate Base cast in place concrete on aggregate surface	tan ϕ_b
Concrete Tail Extension to Concrete Base cast in place concrete on floated concrete surface	0.75
Concrete Tail Extension Directly on Foundation Soil (Sand) cast in place concrete on granular soil	tan ϕ_f
Note: These typical values may be used for evaluation of base sliding at the discretion of the user. The licensed engineer of record is responsible for all design input and for evaluating the reasonableness of calculation output based upon his/her knowledge of local materials and practices and on the specific design details.	

Since the unit fill aggregate is typically placed to a moderately loose state, the friction angle for the screened unit fill aggregate typically controls for the interface between the unit fill and the base aggregate.

If actual test data for the project specific materials is not available, or for preliminary design, the following conservative friction angles are suggested for base and infill aggregates:
(see AASHTO LRFD Fig. 10.4.6.2.4-1)

	Friction Angle (degrees)		
	Well Graded, Aggregate, Densely Compacted	Screened Aggregate, Compacted	Screened Aggregate, Loose to Moderate Relative Density
Crushed Hard Aggregate >75% w/ 2 fractured faces, hard natural rock	42	40	36
Crushed Aggregate >75% w/ 2 fractured faces, medium natural rock or recycled concrete	40	38	35
Cracked Gravel >90% w/ 1 fractured face	36	35	32
Note: Physical testing of specific aggregates is recommended. When test data is not available, these typical values may be used at the discretion of the user. The licensed engineer of record is responsible for all design input and for evaluating the reasonableness of calculation output based upon his/her knowledge of local materials and practices and on the specific design details.			

Project	Project #	Date
LRFD Design Methodology	20004.00	2/20/20

Table of Unfactored Forces & Moments

	Force (lb) or (kN)	Arm (ft) or (m)	Moment about toe (lb*ft) or (kN *m)
Vertical Forces			
weight of blocks	$W_b + W_{te}$	x_{b+te}	$(W_b + W_{te})^* x_{b+te}$
weight of agg. & soil over tail	$W_a + W_s$	x_{a+s}	$(W_a + W_s) * x_{a+s}$
modified weight of a & s (80%)	$0.8*(W_a + W_s)$	x_{a+s}	$0.8*(W_a + W_s) * x_{a+s}$
earth pressure	P_v	x_{Pv}	P_v*x_{Pv}
LL surcharge	Q_{lv}	x_{Qlv}	$Q_{lv}*x_{Qlv}$
Horizontal Forces			
static earth pressure*	P_h	x_{Ph}	P_h*y_{Ph}
seismic thrust*	ΔP_{aeh}	x_{Paeh}	$\Delta P_{aeh}^* y_{Paeh}$
inertial force*	P_{ir}	x_{Pir}	$P_{ir}^* y_{Pir}$
LL surcharge	Q_{lh}	x_{Qlh}	$Q_{lh}*y_{Qlh}$

* For seismic load case, separate analysis should be run using **a)** reduced combined earth pressure (50% of $P_h + \Delta P_{aeh}$, but not less than P_h) with the full inertial force (P_{ir}) and **b)** full earth pressure ($P_h + \Delta P_{aeh}$) with reduced inertial force (50% of P_{ir}).

Project	Project #	Date
LRFD Design Methodology	20004.00	2/20/20

Table of Load and Resistance Factors for the relevant load cases
(based on AASHTO LRFD Tables 3.4.1-1, 3.4.1-2, and 10.5.5.2.2-1)

	Strength I-a	Strength I-b	Strength IV	Extreme I-a (EQ)	Extreme I-b (EQ)	Extreme II (CT)	Service I
Load Factors							
LL	1.75	1.75	0.00	0.00	0.00	0.5	1.00
EH	1.50	1.50	1.50	1.00	1.00	1.00	1.00
EQ	0.00	0.00	0.00	1.00	1.00	0.00	0.00
CT	0.00	0.00	0.00	0.00	0.00	1.00	0.00
LL Surcharge Over Wall	0.00	1.75	0.00	0.00	0.00	0.00	1.00
Resistance Factors							
DC	0.90	1.25	1.50	1.00	1.00	1.00	1.00
EV	1.00	1.35	1.35	1.00	1.00	1.00	1.00
BC	0.45	0.45	0.45	1.00	1.00	1.00	1.00
ϕ_τ precast to agg	0.90	0.90	0.90	1.00	1.00	1.00	1.00
ϕ_τ CIP to agg/soil	0.80	0.80	0.80	1.00	1.00	1.00	1.00
ϕ_τ soil to soil	0.90	0.90	0.90	1.00	1.00	1.00	1.00
ϕ_τ precast to precast	0.90	0.90	0.90	1.00	1.00	1.00	1.00

For each of the load cases, the unfactored vertical and horizontal forces are multiplied by the corresponding load and resistance factors for each.

Project	Project #	Date
LRFD Design Methodology	20004.00	2/20/20

Table of Calculated Factored Forces and Moments

	Force (lb) or (kN)	**Moment (lb*ft) or (kN*m)**
Vertical Forces		
block weight	$(W_b + W_{te})*DC$	$(W_b + W_{te})*x_{b+te}*DC$
aggregate & soil weight	$(W_a + W_s)*EV$	$(W_a + W_s)*x_{a+s}*EV$
modified agg & soil weight	$0.8*(W_a + W_s)*EV$	$0.8*(W_a + W_s)*x_{a+s}*EV$
earth pressure	P_v*EH	$P_v*x_{Pv}*EH$
LL surcharge	$Q_{lv}*LL$	$Q_{lv}*x_{Qlv}*LL$
seismic thrust*	$\Delta P_{aev}*EQ$	$\Delta P_{aev}* x_{Paeh}*EQ$
Horizontal Forces		
static earth pressure*	P_h*EH	$P_h*y_{Ph}*EH$
LL surcharge	$Q_{lh}*LL$	$Q_{lh}*y_{Qlh}*LL$
seismic thrust*	$\Delta P_{aeh}*EQ$	$\Delta P_{aeh}* y_{Paeh}*EQ$
inertial force*	$P_{ir}*EQ$	$P_{ir}* y_{Pir}*EQ$

* For seismic load case, separate analysis should be run using **a)** reduced combined earth pressure (50% of $P_h + \Delta P_{aeh}$, but not less than P_h) with the full inertial force (P_{ir}) and **b)** full earth pressure ($P_h + \Delta P_{aeh}$) with reduced inertial force (50% of P_{ir}).

Overturning/Eccentricity

For overturning, the modified weights using 80% of the aggregate weight (including the soil over the tail extension) are used for all overturning calculations.

Although not an explicit requirement of the AASHTO specification, the driving and resisting overturning moments should be compared:

M'_V	Σ factored moments from vertical forces (using 80% W_s & W_a)
M_H	Σ factored moments from horizontal forces

For each load case, the factored overturning resistance should be greater than the factored overturning load

Check that $M'_V > M_H$

This behavior rarely controls. The AASHTO specification uses eccentricity as a proxy for overturning (but still using 80% of the infill weight).

Eccentricity should be calculated to check overturning. For an aggregate base, the resultant of the vertical forces must fall within the center 2/3 of the base, so eccentricity must be less than 1/3 times the base width (see AASHTO LRFD 11.6.3.3)

$B/3 = (w_{u(\text{bottom unit})} + w_{te})/3$

For a concrete base, or a base bearing on rock, the resultant of the vertical forces must fall within the center 90% of the base, so eccentricity must be less than 45% of the base width (see AASHTO LRFD 11.6.3.3).

$B*0.45 = (w_{u(\text{bottom unit})} + w_{te})*0.45$

For the Extreme load cases, the resultant of the vertical forces must fall within the center 80% of the base, so eccentricity must be less than 40% times the base width (see AASHTO LRFD 11.6.5.1)

$B*0.4 = (w_{u(\text{bottom unit})} + w_{te})*0.4$

(note that for EQ between 0.0 and 1.0, interpolate between 1/3 and 0.4)

Eccentricity or the location of the vertical resultant is calculated as:

F'_V	Σ factored vertical forces (using 80% W_s & W_a)
M'_v	Σ factored moments from vertical forces (using 80% W_s & W_a)
M_H	Σ factored moments from horizontal forces
e	$e = (w_{u(\text{bottom})} + w_{te})/2 + (M_H - M'_V)/F'_V$

For each load case, verify that the eccentricity is less than 1/3 of the base width (or 45% for concrete base, or 40% for Extreme load cases)

Check that e < B/3, or B*0.45, or B*0.40

Sliding

For each load case, the minimum value for sliding resistance is calculated. A resistance factor of 0.8 is used for a cast in place interface (concrete base or a cast in place tail extension), and a factor of 0.9 is used in all other cases.

F_H	Σ factored horizontal forces
F_V	Σ factored vertical forces (using 100% W_s & W_a)
$R_{s\ (footing)}$	$\mu_b\ F_V{*}\phi_\tau$
$R_{s\ (foundation\ soil)}$	$[(F_V + W_{base}){*}\tan(\phi) + B_w{*}c]{*}\phi_\tau$
ϕ_τ	0.8 for cast in place base or extension, 0.9 for other cases
min R_s	smaller of $R_{s\ (footing)}$ or $R_{s\ (foundation\ soil)}$

For each load case, the factored sliding resistance should be greater than the sum of factored horizontal forces

check that min $R_s > F_H$

Bearing

Load Case Strength I-b generally controls bearing.

B_f' is the equivalent bearing area. This is the base block width adjusted for eccentricity, and including a ½H:1V distribution through granular base or 1H:1V distribution through concrete base.

$B_f' = w_u + w_{te} + t_b - 2{*}e$ or

$B_f' = w_u + w_{te} + 2{*}t_b - 2{*}e$ (for concrete base)

F_V	Σ factored vertical forces (using 100% W_s & W_a)
surcharge over wall	$q_{LL}{*}w_{u(top)}{*}LL$
weight of base	$t_b\ {*}\ \gamma_b{*}EH$
M_v	Σ factored moments from vertical forces (using 100% W_s & W_a)
M_H	Σ factored moments from horizontal forces
e	$(w_u + w_{te})/2 - (M_V - M_H)/F_V$
B_f' (granular base)	$w_u + w_{te} + t_b - 2{*}e$
B_f' (concrete base)	$w_u + w_{te} + 2{*}t_b - 2{*}e$
contact pressure q_c	$(F_V + q_{LL}{*}w_{u(top)}{*}LL)/B_f' + t_b{*}\gamma_b{*}EH$
bearing resistance q_b	$[c{*}N_c + (h_e + t_b){*}\gamma_{found}{*}N_q + 0.5{*}\gamma_{found}{*}B_f'{*}N_\gamma]{*}BC$

For each load case, the factored bearing resistance should be greater than the factored contact pressure Check that $q_b > q_c$

Project	Project #	Date
LRFD Design Methodology	20004.00	2/20/20

Internal Analysis

Internal stability analysis is conducted for each section above the wall base. Since bearing conditions are addressed in the external stability analysis, only toppling and shear failures are evaluated.

Toppling is evaluated similarly to external overturning analysis, except that the overturning point is set in 1 inch (25 mm) to account for face rounding. Eccentricity for block to block contact should be within the middle 90% of the base as required for a rock foundation.

For each load case:

check that $e < B*0.45$

Shear, or sliding, resistance is calculated based on the interface shear test (see interaction test reports for complete test data)

$R_s = [S_i + (W + P_v + Q_{dv})* \tan(35.2°)]*\varphi_T$

where $\varphi_T = 0.90$ (precast to precast and aggregate to aggregate)

$S_i = 362$ lb/ft or 5.28 kN/m

For each load case, the factored sliding resistance must be greater than the factored horizontal force:

check that $R_s > F_H$

At a minimum, internal stability should be evaluated at each change in block width (including any tail extension), at the base of any dual-face units, and for the top course(s) if a surcharge or lateral load is applied.

EXAMPLE GRAVITY WALL CALCULATIONS
LRFD METHOD USING AASHTO LOAD/RESISTANCE FACTORS

Example 1: 12 feet tall wall, vertical face, level back slope, 250 psf traffic surcharge

Retained Soil: sand with γ = 120 pcf and ϕ = 30 degrees
Foundation Soil: clay with γ = 125 pcf, ϕ = 26 degrees, and c' = 150 psf
Infill Aggregate: screened crushed aggregate with γ = 110 pcf and ϕ = 35 degrees
Base Aggregate: well graded crushed aggregate with γ = 125 pcf and ϕ = 40 degrees

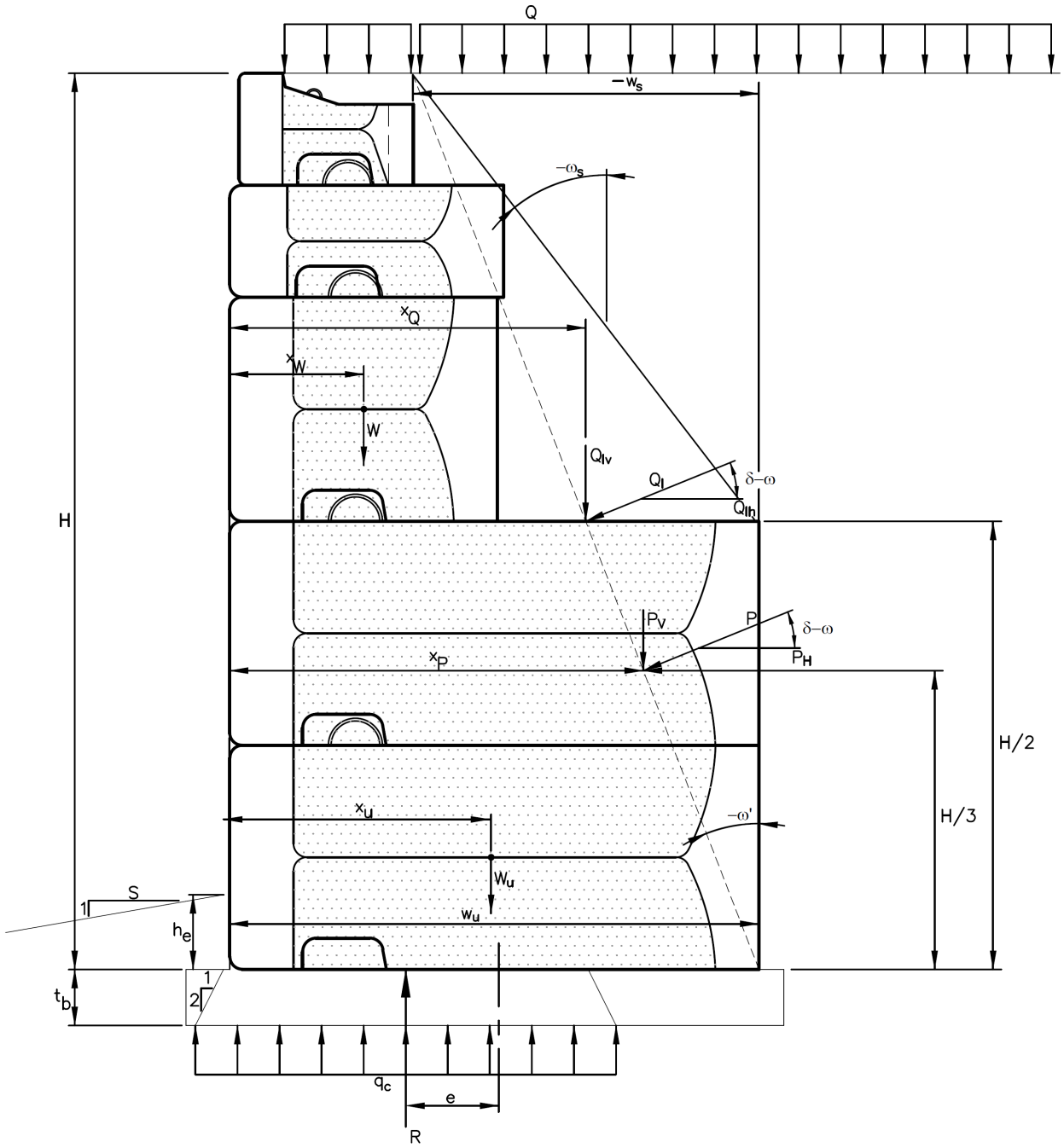

Project	Project #	Date
LRFD Example Calculations	20004.00	11/16/20

Wall Configuration (all weights per foot along length of wall)

Modular Units			Setback (in)		Concrete (/ft.)		Unit Fill (/ft.)		Soil Wedge (/ft.)	
unit	w (in)	h (ft)	face	tail	W_b (lb)	x_b (in)	W_a (lb)	x_a (in)	W_s (lb)	x_s (in)
V6-28	28.0	1.50	0.0	-57.0	238	12.8	183	14.0	110	33.3
V6	44.0	1.50	0.0	-41.0	375	21.0	301	23.5	94	48.6
V24	43.0	3.00	0.0	-42.0	750	20.2	594	23.8	779	58.3
V24-86	85.0	3.00	0.0	0.0	950	39.0	1,621	44.1	0	0.0
V24-86	85.0	3.00	0.0	0.0	950	39.0	1,621	44.1	0	0.0

External Stability Analysis

Weight and Center of Gravity of Wall Components

W_b = 950+950+750+375+238 = 3,263 lb/ft

W_a = 1,621+1,621+594+301+183= 4,320 lb/ft

W_s = 779+94+110 = 983 lb/ft

Total Wall Weight = 3,263+4,320+983 = 8,490 lb/ft

x_b = (950*39.0+950*39.0+750*20.2+375*21.0+238*12.8) / 3,263 =30.7 in

y_b = (950*18+950*54+750*90+375*117+238*135) / 3,263 = 64.9 in

x_a = (1,621*44.1+1,621*44.1+594*23.8+301*23.5+183*14.0) / 4,320 = 38.6 in

y_a = (1,621*18+1,621*54+594*90+301*117+183*135) / 4,320 = 53.3 in

x_s = (779*58.3+94*48.6+110*33.3) / 983 = 54.5 in

y_s = (779*89.9+94*117.0+110*132.0) / 983 = 97.1 in

x_{a+s} = (4,320*38.6+983*54.5) / (4,320+983) = 41.5 in

y_{a+s} = (4,320*53.3+983*97.1) / (4,320+983) = 61.4 in

Earth Pressure Components

ω' = arctan(-57/12/12.0) = -21.6° δ = 0.75*30 = 22.5°

$$K_a = \frac{\cos^2(30+-21.6)}{\cos^2(-21.6)\cos(-21.6-22.5)\left[1+\sqrt{\frac{\sin(30+22.5)\sin(30-0)}{\cos(-21.6-22.5)\cos(-21.6+0)}}\right]^2}$$

K_a = 0.503

P_h = 0.5*(0.503)*120*(12)^2*cos(22.5+21.6) = 3,119 lb/ft

P_v = 0.5*(0.503)*120*(12)^2*sin(22.5+21.6) = 3,022 lb/ft

Q_{lh} = 0.503*250*12*cos(22.5+21.6) = 1,083 lb/ft

Q_{lv} = 0.503*250*12*sin(22.5+21.6) = 1,049 lb/ft

x_P = (12/3)*tan(-21.6)+85/12 = 5.50 ft y_P = 12/3 = 4.00 ft

x_{Ql} = (12/2)*tan(-21.6)+85/12 = 4.71 ft y_{Ql} = 12/2 = 6.00 ft

Project	Project #	Date
LRFD Example Calculations	20004.00	11/16/20

Table of Unfactored Forces & Moments (per foot of wall)

	Unfactored Force (lb)	arm (ft)	Unfactored Moment about toe (lb*ft)
Vertical Forces			
W_b	3,263	2.56	8,346
$W_a + W_s$	5,304	3.46	18,366
$0.80*(W_a + W_s)$	4,243	3.46	14,693
P_v	3,022	5.50	16,622
Q_{lv}	1,049	4.71	4,941
$Q_{l\ over\ wall}$	583	1.17	681
Horizontal Forces			
P_h	3,119	4.00	12,477
Q_{lh}	1,083	6.00	6,498

Table of Load & Resistance Factors

	Strength I-a	Strength I-b	Strength IV	Service I
Load Factors				
LL	1.75	1.75	0.00	1.00
EH	1.50	1.50	1.50	1.00
EQ	0.00	0.00	0.00	0.00
CT	0.00	0.00	0.00	0.00
LL over wall	0.00	1.75	0.00	1.00
Resistance Factors				
DC	0.90	1.25	1.50	1.00
EV	1.00	1.35	1.35	1.00
BC	0.45	0.45	0.45	1.00
ϕ_τ precast to agg	0.90	0.90	0.90	1.00
ϕ_τ CIP to agg/soil	0.80	0.80	0.80	1.00
ϕ_τ soil to soil	0.90	0.90	0.90	1.00
ϕ_τ precast to precast	0.90	0.90	0.90	1.00

Project	Project #	Date
LRFD Example Calculations	20004.00	11/16/20

Table of Calculated Factored Forces (lbs per foot of wall)

	Unfactored Force	Load Factor	Strength I-a	Strength I-b	Strength IV	Service I
Vertical Forces						
W_b	3,263	DC	2,936	4,078	4,894	3,263
$W_a + W_s$	5,304	EV	5,304	7,160	7,160	5,304
$0.80*(W_a + W_s)$	4,243	EV	4,243	5,728	5,728	4,243
P_v	3,022	EH	4,533	4,533	4,533	3,022
Q_{lv}	1,049	LL	1,836	1,836	0	1,049
$Q_{l\ over\ wall}$	583	LL over	0	1,021	0	583
Horizontal Forces						
P_h	3,119	EH	4,679	4,679	4,679	3,119
Q_{lh}	1,083	LL	1,895	1,895	0	1,083

Table of Calculated Factored Moments (lb*ft per foot of wall)

	Unfactored Moment	Load Factor	Strength I-a	Strength I-b	Strength IV	Service I
Vertical Forces						
W_b	8,346	DC	7,511	10,433	12,519	8,346
$W_a + W_s$	18,366	EV	18,366	24,794	24,794	18,366
$0.80*(W_a + W_s)$	14,693	EV	14,693	19,835	19,835	14,693
P_v	16,622	EH	24,933	24,933	24,933	16,622
Q_{lv}	4,941	LL	8,646	8,646	0	4,941
$Q_{l\ over\ wall}$	681	LL over	0	1,191	0	681
Horizontal Forces						
P_h	12,477	EH	18,715	18,715	18,715	12,477
Q_{lh}	6,498	LL	11,372	11,372	0	6,498

Project	Project #	Date
LRFD Example Calculations	20004.00	11/16/20

Overturning/Eccentricity

Check that $M'_V > M_H$

Check that e>B/3 (40% of B for extreme load cases)

Strength Case I-a:

M'_V = 7,511+14,693+24,933+8,646 = 55,784 lb*ft/ft

M_H = 18,715+11,372 = 30,087 lb*ft/ft

$M'_V > M_H$ **OK!!**

e = (85/12)/2+(30,087-55,784)/(2,936+4,243+4,533+1,836) = 1.65 ft

B/3 = (85/12)/3 = 2.36 ft

e < B/3 **OK!!**

Table for all load cases

	Strength I-a	Strength I-b	Strength IV	Service I
F'_v	13,549	17,196	15,155	12,160
M'_v	55,784	65,038	57,287	45,282
M_h	30,087	30,087	18,715	18,975
e	1.65	1.51	1.00	1.38

All load cases **OK!!**

Sliding

Check that $R'_s > F_h$

Strength Case I-a:

Use the smaller sliding resistance, R'_s, across footing or through foundation soil:

$R'_{s\,(soil)}$ = [(2,936+5,304+4,533+1,836+ (85/12)*(9/12)*125*1.0)*tan(26)+((85+9)/12*150)]*0.9
= 7,762 lb/ft

$\%_{void}$ = (1,621/110) / (950/145+1,621/110) = 0.6922

$\%_{concrete}$ = (950/145) / (950/145+1,621/110) = 0.3078

μ_b = 0.6922*tan(35)+0.3078*0.8*tan(40) = 0.69

$R'_{s\,(footing)}$ = [0.69*(2,936+5,304+4,533+1,836)]*0.9
= 9,090 lb/ft

F_h = 4,679+1,895 = 6,574 lb/ft

$R'_s > F_h$ **OK!!**

Table for all load cases

	Strength I-a	Strength I-b	Strength IV	Service I
F_h	6,574	6,574	4,679	4,202
F_v	14,610	18,628	16,587	13,221
F_v w/ base weight	15,274	19,525	17,483	13,885
ϕ_τ	0.90	0.90	0.90	1.00
$R'_{s\ (foundation\ soil)}$	7,762	9,628	8,732	7,947
$R'_{s\ (footing)}$	9,090	11,590	10,320	9,140

All Load Cases **OK!!**

Bearing

Check that $q_b > q_c$

Strength Case I-a:

e = (85/12)/2-((7,511+18,366+24,933+8,646)-(18,715+11,372)) / (2,936+5,304+4,533+1,836) = 1.53

B_f'= (85+9)/12-2*1.53 ft = 4.77 ft

Bearing Factors (Vesic):

N_q = 11.85 N_c = 22.25 $N\gamma$ = 12.54

q_b = [150*22.25+(12+9)/12*125*11.85+0.5*125*4.76*12.54]*0.45 = 4,351 psf

weight of base = t_b *γ_{base}*EH = 9/12*125*1.5 = 141 psf

q_c = (14,610)/4.77+141 = 3,203 psf

$q_b > q_c$ **OK!!**

Table for all load cases

	Strength I-a	Strength I-b	Strength IV	Service I
F_v	14,610	18,628	16,587	13,221
M_v	59,457	69,997	62,246	48,955
M_h	30,087	30,087	18,715	18,975
e	1.53	1.40	0.92	1.27
B_f	4.77	5.03	6.00	5.29
q_c	3,203	3,841	2,906	2,595
q_b	4,351	4,445	4,785	10,073

All Load Cases **OK!!**

Project	Project #	Date
LRFD Example Calculations	20004.00	11/16/20

Internal Stability

Internal stability should be checked at each change in block width, at all dual-face unit, and at the top unit at a minimum. The following is taken at the first change from 24-86 to 24SF. Internal stability of the block stack above this interface is calculated as follows:

Wall Configuration (all weights per foot along length of wall)

Modular Units			Setback (in)		Concrete (/ft.)		Unit Fill (/ft.)		Soil Wedge (/ft.)	
unit	w (in)	h (ft)	face	tail	W_b (lb)	x_b (in)	W_a (lb)	x_a (in)	W_s (lb)	x_s (in)
V6-28	28.0	1.50	0.0	-15.0	238	11.8	183	13.0	110	32.3
V6	44.0	1.50	0.0	1.0	375	20.0	301	22.5	0	0.0
V24	43.0	3.00	0.0	0.0	750	19.2	594	22.8	0	0.0

Weight and Center of Gravity of Wall Components

W_b = 750+375+238 = 1,363 lb/ft
W_a = 594+301+183 = 1,078 lb/ft
W_s = 110 lb/ft

x_b= (750*19.2+375*20.0+238*11.8) / 1,363 = 18.1 in
y_b = (750*18+375*45+238*63) / 1,363 = 33.3 in
x_a = (594*22.8+301*22.5+183*13.0) / 1,078 = 21.1 in
y_a = (594*18+301*45+183*63) / 1,078 = 33.2 in
x_s = 32.3 in
y_s = 110*60/110 = 60 in
x_{a+s} = (1,078*21.1+110*32.3) / (1,078+110) = 22.1 in
y_{a+s} = (1,078*33.3+110*60) / (1,078+110) = 35.7 in

Earth Pressure Components

ω' = arctan(-15/12/6.0) = -11.77° δ = 0.75*30 = 22.5°

$$K_a = \frac{\cos^2(30+-11.77)}{\cos^2(-11.77)\cos(22.5--11.77)\left[1+\sqrt{\frac{\sin(30+22.5)\sin(30-0)}{\cos(22.5--11.77)\cos(-11.77+0)}}\right]^2}$$

K_a = 0.394
P_h = 0.5*(0.394)*120*(6)^2*cos(22.5+11.77) = 703 lb/ft
P_v = 0.5*(0.394)*120*(6)^2*sin(22.5+11.77) = 479 lb/ft
Q_{lh} = 0.394*250*6*cos(22.5+11.77) = 488 lb/ft
Q_{lv} = 0.394*250*6*sin(22.5+11.77) = 333 lb/ft

x_P = (6/3)*tan(-11.77)+43/12 = 3.17 ft y_P = 6/3 = 2.0 ft
x_{Ql} = (6/2)*tan(-11.77)+43/12 = 2.96 ft y_{Ql} = 6/2 = 3.00 ft

Project	Project #	Date
LRFD Example Calculations	20004.00	11/16/20

Table of Unfactored Forces & Moments (per foot of wall)

	Unfactored Force (lb)	arm (ft)	Unfactored Moment about toe (lb*ft)
Vertical Forces			
Wb	1,363	1.51	2,058
Wa + Ws	1,188	1.84	2,188
0.80*(Wa + Ws)	951	1.84	1,750
Pv	479	3.08	1,478
Qlv	333	2.88	957
$Ql_{\text{over wall}}$	583	1.08	632
Horizontal Forces			
Ph	703	2.00	1,407
Qlh	488	3.00	1,465

Table of Load & Resistance Factors

	Strength I-a	Strength I-b	Strength IV	Service I
Load Factors				
LL	1.75	1.75	0.00	1.00
EH	1.50	1.50	1.50	1.00
EQ	0.00	0.00	0.00	0.00
CT	0.00	0.00	0.00	0.00
LL over wall	0.00	1.75	0.00	1.00
Resistance Factors				
DC	0.90	1.25	1.50	1.00
EV	1.00	1.35	1.35	1.00
$\phi\tau_{\text{precast to precast}}$	0.90	0.90	0.90	1.00

Project	Project #	Date
LRFD Example Calculations	20004.00	11/16/20

Table of Calculated Factored Forces (lbs per foot of wall)

	Unfactored Force	Load Factor	Strength I-a	Strength I-b	Strength IV	Service I
Vertical Forces						
W_b	1,363	DC	1,226	1,703	2,044	1,363
$W_a + W_s$	1,188	EV	1,188	1,604	1,604	1,188
$0.80*(W_a + W_s)$	951	EV	951	1,283	1,283	951
P_v	479	EH	719	719	719	479
Q_{lv}	333	LL	582	582	0	333
$Q_{l\ over\ wall}$	583	LL over	0	1,021	0	583
Horizontal Forces						
P_h	703	EH	1,055	1,055	1,055	703
Q_{lh}	488	LL	855	855	0	488

Table of Calculated Factored Moments (lb*ft per foot of wall)

	Unfactored Moment	Load Factor	Strength I-a	Strength I-b	Strength IV	Service I
Vertical Forces						
W_b	2,058	DC	1,852	2,572	3,086	2,058
$W_a + W_s$	2,188	EV	2,188	2,954	2,954	2,188
$0.80*(W_a + W_s)$	1,750	EV	1,750	2,363	2,363	1,750
P_v	1,478	EH	2,216	2,216	2,216	1,478
Q_{lv}	957	LL	1,674	1,674	0	957
$Q_{l\ over\ wall}$	632	LL over	0	1,106	0	632
Horizontal Forces						
P_h	1,407	EH	2,110	2,110	2,110	1,407
Q_{lh}	1,465	LL	2,564	2,564	0	1,465

Overturning/Topple

Check that $M'_V > M_H$

Check that e < B*0.45 (40% of B for extreme load cases)

Strength Case I-a:

M'_V = 1,852+1,750+2,216+1,674 = 7,493 lb*ft/ft

M_H = 2,110+2,564 = 4,674 lb*ft/ft

$M'_V > M_H$ **OK!!**

e = (42/12)/2+(4,674-7,493)/(1,226+951+719+582) = 0.94 ft

B*0.45 = (42/12)*0.45 = 1.58 ft

e < B*0.45 **OK!!**

Table for all load cases

	Strength I-a	Strength I-b	Strength IV	Service I
F'_v	3,478	5,308	4,046	3,708
M'_v	7,493	9,932	7,666	6,874
M_h	4,674	4,674	2,110	2,872
e	0.94	0.76	0.38	0.67

All Load Cases **OK!!**

Interface Shear

Check that $R'_s > F_h$

Strength Case I-a:

R'_s = [362+ (1,226+1,188+719+582)*tan(35.2)]* 0.9 = 2,685

F_h = 1,055+855 = 1,910 lb/ft

$R'_s > F_h$ **OK!!**

Table for all load cases

	Strength I-a	Strength I-b	Strength IV	Service I
Fh	1,910	1,910	1,055	1,192
Fv	3,716	5,629	4,367	3,946
$\phi\tau$	0.90	0.90	0.90	1.00
R's	2,685	3,900	3,098	3,146

All Load cases **OK!!**

External & Internal Stability **OK!!**

Project	Project #	Date
LRFD Example Calculations	20004.00	11/16/20

Example 2: 12 feet tall wall, battered face, 3H:1V back slope, CIP tail extension

Retained Soil: sand with γ = 120 pcf and ϕ = 30 degrees
Foundation Soil: clay with γ = 125 pcf, ϕ = 26 degrees, and c' = 150 psf
Infill Aggregate: screened crushed aggregate with γ = 110 pcf and ϕ = 35 degrees
Base Aggregate: well graded crushed aggregate with γ = 125 pcf and ϕ = 40 degrees
Tail Extension: 24 inches wide by 54 inches tall, placed on aggregate base

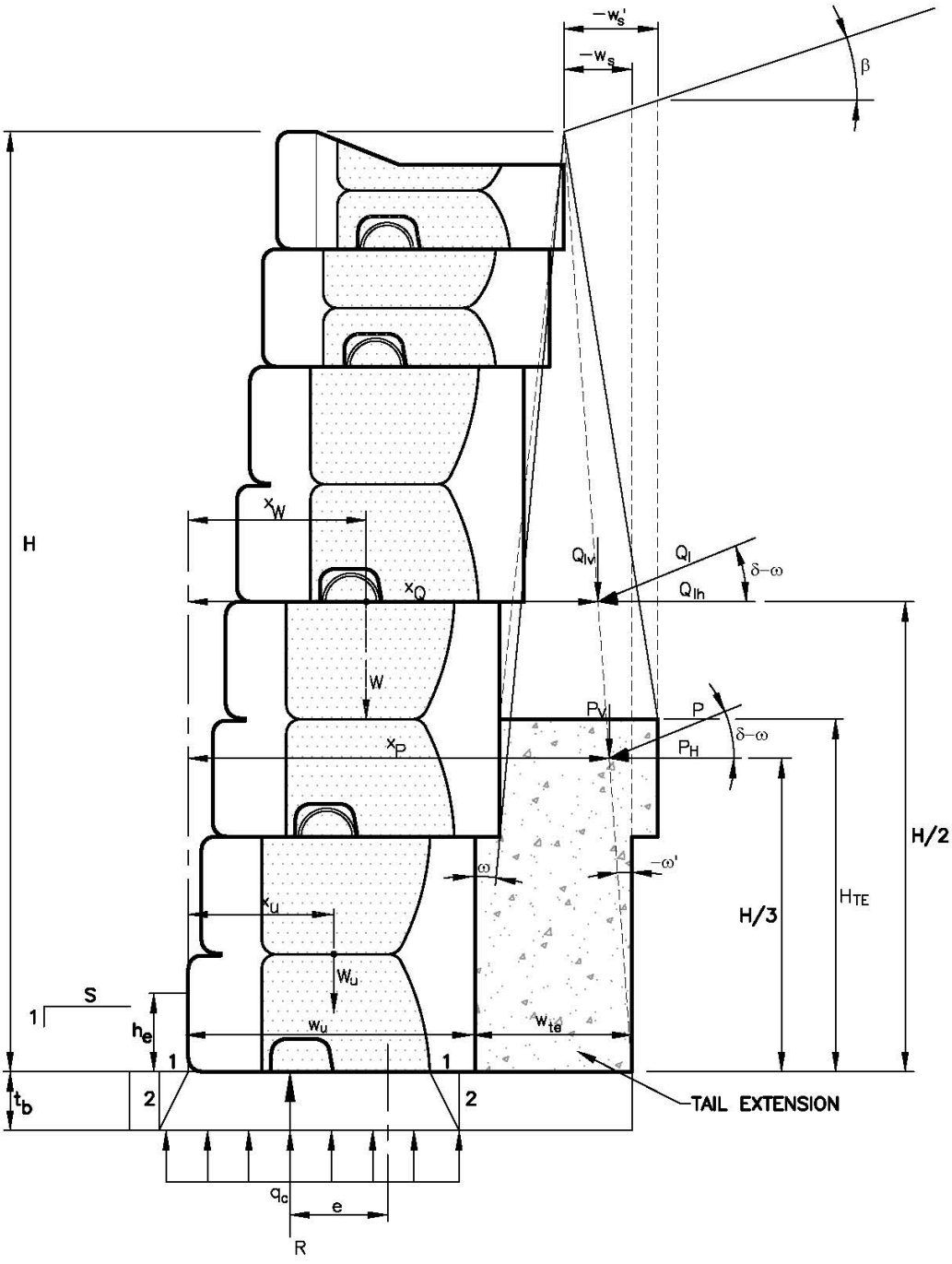

Project	Project #	Date
LRFD Example Calculations	20004.00	11/16/20

Wall Configuration including CIP tail extension (all weights per foot along length of wall)

Modular Units			Setback (in)		Concrete (/ft.)		Unit Fill (/ft.)		Soil Wedge (/ft.)	
unit	w (in)	h (ft)	face	tail	W_b (lb)	x_b (in)	W_a (lb)	x_a (in)	W_s (lb)	x_s (in)
6	44.0	1.50	14.0	-10.0	375	35.0	301	37.5	19	58.9
6	44.0	1.50	12.0	-12.0	375	33.0	301	35.5	85	59.2
24	44.0	3.00	8.0	-16.0	750	29.2	594	32.8	396	59.3
24	68.0	3.00	4.0	4.0	1,185	38.0	594	28.8	311	71.1
24	68.0	3.00	0.0	0.0	1,620	39.9	594	24.8	0	0.0

External Stability Analysis

Weight and Center of Gravity of Wall Components

$W_b + W_{te}$ = (750+145*2.0*3.0)+ (750+145*2.0*1.5)+750+375+375 = 4,305 lb/ft

W_a = 594+594+594+301+301 = 2,385 lb/ft

W_s = 311+396+85+19 = 811 lb/ft

x_{b+te} = (1,620*39.9+1,185*38.0+750*29.2+375*33.0+375*35.0) / 4,305 = 36.5 in

y_{b+te} = (1,620*18+1,185*54+750*90+375*117+375*135) / 4,305 = 59.3 in

x_a = (594*24.8+594*28.8+594*32.8+301*35.5+301*37.5) / 2,385 = 30.7 in

y_a = (594*18+594*54+594*90+301*117+301*135) / 2,385 = 72.2 in

x_s = (311*71.1+396*59.3+85*59.2+19*58.9) / 811 = 63.8 in

y_s = (311*60.0+396*88.8+85*116.3+19*132) / 811 = 81.7 in

x_{a+s} = (2,385*30.7+811*63.8) / (2,385+811) = 39.1 in

y_{a+s} = (2,385*72.2+811*81.7) / (2,385+811) = 74.6in

Earth Pressure Components

ω' = arctan(-10/12/12.0) = -3.97° $\qquad$ δ = 0.75*30 = 22.5°

$$K_a = \frac{\cos^2(30+-3.97)}{\cos^2(-3.97)\cos(-3.97-22.5)\left[1+\sqrt{\frac{\sin(30+22.5)\sin(30-18.4)}{\cos(-3.97-22.5)\cos(-3.97+18.4)}}\right]^2}$$

K_a = 0.444

P_h = 0.5*(0.444)*120*(12)^2*cos(22.5+3.79) = 3,436 lb

P_v = 0.5*(0.444)*120*(12)^2*sin(22.5+3.79) = 1,711 lb

x_p = (12/3)*tan(-3.97)+(68/12) = 5.39 ft

y_p = (12/3) = 4.00

Project	Project #	Date
LRFD Example Calculations	20004.00	11/16/20

Table of Unfactored Forces & Moments (per foot of wall)

	Unfactored Force (lb)	arm (ft)	Unfactored Moment about toe (lb*ft)
Vertical Forces			
W_b	4,305	3.04	13,085
$W_a + W_s$	3,196	3.26	10,421
$0.80*(W_a + W_s)$	2,557	3.26	8,337
P_v	1,711	5.39	9,221
Q_{lv}	0	5.25	0
$Q_{l\ over\ wall}$	0	2.92	0
Horizontal Forces			
P_h	3,436	4.00	13,744
Q_{lh}	0	6.00	0

Table of Load & Resistance Factors

	Strength I-a	Strength I-b	Strength IV	Service I
Load Factors				
LL	1.75	1.75	0.00	1.00
EH	1.50	1.50	1.50	1.00
EQ	0.00	0.00	0.00	0.00
CT	0.00	0.00	0.00	0.00
LL over wall	0.00	1.75	0.00	1.00
Resistance Factors				
DC	0.90	1.25	1.50	1.00
EV	1.00	1.35	1.35	1.00
BC	0.45	0.45	0.45	1.00
ϕ_τ precast to agg	0.90	0.90	0.90	1.00
ϕ_τ CIP to agg/soil	0.80	0.80	0.80	1.00
ϕ_τ soil to soil	0.90	0.90	0.90	1.00
ϕ_τ precast to precast	0.90	0.90	0.90	1.00

Project	Project #	Date
LRFD Example Calculations	20004.00	11/16/20

Table of Calculated Factored Forces (lbs per foot of wall)

	Unfactored Force	Load Factor	Strength I-a	Strength I-b	Strength IV	Service I
Vertical Forces						
W_b	4,305	DC	3,875	5,381	6,458	4,305
$W_a + W_s$	3,196	EV	3,196	4,314	4,314	3,196
$0.80*(W_a + W_s)$	2,557	EV	2,557	3,452	3,452	2,557
P_v	1,711	EH	2,567	2,567	2,567	1,711
Q_{lv}	0	LL	0	0	0	0
$Q_{l\ over\ wall}$	0	LL over	0	0	0	0
Horizontal Forces						
P_h	3,436	EH	5,154	5,154	5,154	3,436
Q_{lh}	0	LL	0	0	0	0

Table of Calculated Factored Moments (lb*ft per foot of wall)

	Unfactored Moment	Load Factor	Strength I-a	Strength I-b	Strength IV	Service I
Vertical Forces						
W_b	13,085	DC	11,777	16,356	19,628	13,085
$W_a + W_s$	10,421	EV	10,421	14,069	14,069	10,421
$0.80*(W_a + W_s)$	8,337	EV	8,337	11,255	11,255	8,337
P_v	9,221	EH	13,831	13,831	13,831	9,221
Q_{lv}	0	LL	0	0	0	0
$Q_{l\ over\ wall}$	0	LL over	0	0	0	0
Horizontal Forces						
P_h	13,744	EH	20,615	20,615	20,615	13,744
Q_{lh}	0	LL	0	0	0	0

Project	Project #	Date
LRFD Example Calculations	20004.00	11/16/20

Overturning/Eccentricity

Check that $M'_V > M_H$

Check that e>B/3 (40% of B for extreme load cases)

Strength Case I-a:

M'_V = 11,777+8,337+13,831 = 33,944 lb*ft/ft

M_H = 20,615 lb*ft/ft

$M'_V > M_H$ **OK!!**

e = (68/12)/2+(20,615-33,944) / (3,875+2,557+2,567) = 1.35 ft

B/3 = (68/12)/3 = 1.89 ft

e < B/3 **OK!!**

Table for all load cases

	Strength I-a	Strength I-b	Strength IV	Service I
F'_v	8,998	11,399	12,476	8,573
M'_v	33,944	41,442	44,713	30,643
M_h	20,615	20,615	20,615	13,744
e	1.35	1.01	0.90	0.86

All load cases **OK!!!**

Sliding

Check that $R'_s > F_h$

Strength Case I-a:

Use the smaller sliding resistance, R'_s, across footing or through foundation soil:

$R'_{s\,(soil)}$ = [(3,875+3,196+2,567+(68/12)*(9/12)*110*1.0)*tan(26)*((68+9)/12)*150]*0.9
= 5,330 lb/ft

Tail extension is assumed to be on aggregate base

$\%_{void}$ = (594/110) / (594/110+750/145+24/12*3) = 0.2281

$\%_{precast}$ = (750/145) / (594/110+750/145+24/12*3) = 0.2095

$\%_{CIP}$ = (24/12*3) / (594/110+750/145+24/12*3) = 0.3038

μ_b = (0.2281*tan(35)+0.2095*0.8*tan(40)+0.3038*tan(40)) = 0.74

$R'_{s\,(footing)}$ = 0.9*0.74*(3,875+3,196+2,567)
= 6,419 lb/ft

F_h = 5,154 lb/ft

$R'_s > F_h$ **OK!!**

Project	Project #	Date
LRFD Example Calculations	20004.00	11/16/20

Table for all load cases

	Strength I-a	Strength I-b	Strength IV	Service I
F_h	5,154	5,154	5,154	3,436
F_v	9,637	12,262	13,339	9,212
F_v w/ base weight	10,168	12,979	14,056	9,743
ϕ_τ	0.90	0.90	0.90	1.00
$R'_{s\ (foundation\ soil)}$	5,330	6,564	7,036	5,715
$R'_{s\ (footing)}$	6,419	8,167	8,884	6,817

All Load Cases **OK!!**

Bearing

Check that $q_b > q_c$

Strength Case I-a:

e = ((68/12)/2+(20,615-11,777+10,421+13,831) / (3,875+3,196+2,567) = 1.23

B_f'= (68+9)/12-2*1.23 ft = 3.95 ft

Bearing Factors (Vesic):

N_q = 11.85 N_c = 22.25 $N\gamma$ = 12.54

q_b = [150*22.25+(12+9)/12*125*11.85+0.5*125*3.96*12.54]*0.45 = 4,062 psf

weight of base = t_b *γ_{base}*EH = 9/12*125*1.5 = 141 psf

q_c = (9,637)/3.95+141 = 2,581 psf

$q_b > q_c$ **OK!!**

Table for all load cases

	Strength I-a	Strength I-b	Strength IV	Service I
Fv	9,637	12,262	13,339	9,212
Mv	36,029	44,256	47,527	32,727
Mh	20,615	20,615	20,615	13,744
e	1.23	0.91	0.82	0.77
Bf	3.95	4.61	4.79	4.87
qc	2,581	2,803	2,928	1,985
qb	4,062	4,293	4,357	9,749

All Load Cases **OK!!**!

Project	Project #	Date
LRFD Example Calculations	20004.00	11/16/20

Internal Stability

Internal stability should be checked at each change in block width, at all dual-face units, and at the top unit at a minimum. The following is taken at the first change from 24SF with tail extension to a standard 24SF units. Internal stability of the block stack above this interface is calculated as follows:

Wall Configuration (all weights per foot along length of wall)

Modular Units			Setback (in)		Concrete (/ft.)		Unit Fill (/ft.)	
unit	w (in)	h (ft)	face	tail	W_b (lb)	x_b (in)	W_a (lb)	x_a (in)
6	44.0	1.50	6.0	6.0	375	26.0	301	28.5
6	44.0	1.50	4.0	4.0	375	24.0	301	26.5
24	44.0	3.00	0.0	0.0	750	20.2	594	23.8

Weight and Center of Gravity of Wall Components

W_b = 750+375+375 = 1,500 lb/ft
W_a = 594+301+301 = 1,196 lb/ft

x_b= (750*20.2+375*24.0+375*26.0) / 1,500 = 22.6 in
y_b = (750*18+375*45+375*63) / 1,500 = 36.0 in
x_a = (594*23.8+301*26.5+301*28.5) / 1,196 = 25.7 in
y_a = (594*18+301*45+301*63) / 1,196 = 36.1 in

Earth Pressure Components

$\omega' = 6.34°$ $\delta = 0.5*30 = 15.0°$

$$K_a = \frac{\cos^2(30+6.34)}{\cos^2(6.34)\cos(6.34-15.0)\left[1+\sqrt{\frac{\sin(30+15.0)\sin(30-18.4)}{\cos(6.34-15.0)\cos(6.34+18.4)}}\right]^2}$$

K_a = 0.340
P_h = 0.5*(0.340)*120*(6)^2*cos(15-6.34) = 727 lb
P_v = 0.5*(0.340)*120*(6)^2*sin(15-6.34) =111 lb

x_P = (6/3)*tan(6.34)+(43/12) = 3.81 ft
y_P = 6/3 = 2.00 ft

Project	Project #	Date
LRFD Example Calculations	20004.00	11/16/20

Table of Unfactored Forces & Moments (per foot of wall)

	Unfactored Force (lb)	arm (ft)	Unfactored Moment about toe (lb*ft)
Vertical Forces			
W_b	1,500	1.88	2,825
$W_a + W_s$	1,196	2.14	2,559
$0.80*(W_a + W_s)$	957	2.14	2,047
P_v	111	3.81	421
Q_{lv}	0	3.92	0
$Q_{l\ over\ wall}$	0	2.92	0
Horizontal Forces			
P_h	727	2.00	1,453
Q_{lh}	0	3.00	0

Table of Load & Resistance Factors

	Strength I-a	Strength I-b	Strength IV	Service I
Load Factors				
LL	1.75	1.75	0.00	1.00
EH	1.50	1.50	1.50	1.00
EQ	0.00	0.00	0.00	0.00
CT	0.00	0.00	0.00	0.00
LL over wall	0.00	1.75	0.00	1.00
Resistance Factors				
DC	0.90	1.25	1.50	1.00
EV	1.00	1.35	1.35	1.00
$\phi_{\tau\ precast\ to\ precast}$	0.90	0.90	0.90	1.00

Project	Project #	Date
LRFD Example Calculations	20004.00	11/16/20

Table of Calculated Factored Forces (lbs per foot of wall)

	Unfactored Force	Load Factor	Strength I-a	Strength I-b	Strength IV	Service I
Vertical Forces						
W_b	1,500	DC	1,350	1,875	2,250	1,500
$W_a + W_s$	1,196	EV	1,196	1,615	1,615	1,196
$0.80*(W_a + W_s)$	957	EV	957	1,292	1,292	957
P_v	111	EH	166	166	166	111
Q_{lv}	0	LL	0	0	0	0
$Q_{l\ over\ wall}$	0	LL over	0	0	0	0
Horizontal Forces						
P_h	727	EH	1,090	1,090	1,090	727
Q_{lh}	0	LL	0	0	0	0

Table of Calculated Factored Moments (lb*ft per foot of wall)

	Unfactored Moment	Load Factor	Strength I-a	Strength I-b	Strength IV	Service I
Vertical Forces						
W_b	2,825	DC	2,543	3,531	4,238	2,825
$W_a + W_s$	2,559	EV	2,559	3,454	3,454	2,559
$0.80*(W_a + W_s)$	2,047	EV	2,047	2,763	2,763	2,047
P_v	421	EH	632	632	632	421
Q_{lv}	0	LL	0	0	0	0
$Q_{l\ over\ wall}$	0	LL over	0	0	0	0
Horizontal Forces						
P_h	1,453	EH	2,180	2,180	2,180	1,453
Q_{lh}	0	LL	0	0	0	0

Overturning/Topple

Check that $M'_V > M_H$

Check that e<B*0.45 (40% of B for extreme load cases)

Strength Case I-a:

M'_V = 2,543+2,047+642 = 5,221 lb*ft/ft

M_H = 2,180 lb*ft/ft

$M'_V > M_H$ **OK!!**

e = (43)/12/2+(2,180-5,221) / (1,350+957+166) = 0.56 ft

B*0.45 = (43/12)*0.45 = 1.61 ft

e < B*0.45 **OK!!**

Table for all load cases

	Strength I-a	Strength I-b	Strength IV	Service I
F'_v	2,473	3,333	3,708	2,568
M'_v	5,221	6,926	7,632	5,293
M_h	2,180	2,180	2,180	1,453
e	0.56	0.37	0.32	0.30

All Load Cases **OK!!**

Interface Shear

Check that $R'_s > F_h$

Strength Case I-a:

R'_s = [362+ (1,350+1,196+166)*tan(35.2)]*0.9 = 2,048

F_h = 1,090 lb/ft

$R'_s > F_h$ **OK!!**

Table for all load cases

	Strength I-a	Strength I-b	Strength IV	Service I
F_h	1,090	1,090	1,090	727
F_v	2,712	3,656	4,031	2,807
ϕ_τ	0.90	0.90	0.90	1.00
R'_s	2,048	2,647	2,885	2,342

All Load cases **OK!!**

External & Internal Stability **OK!!**

STONE STRONG SYSTEMS®

STONE STRONG GRAVITY CALCULATIONS - ver 6.0

Project Name: Example Calculations
Location:
Job#: 20004.00
Section: Example #1
Calc by: D Thiele

(AASHTO 8th Edition, 2017)

2/20/20 15:51

Notes 12.0 tall wall with extended precast units, vertical face
level back slope, no foreslope or siesmic, 250 psf roadway surcharge
External Stability

Wall Configuration

			setback (in)		modular units		unit fill		soil wedge		CIP Extension		
unit	w (in)	h (ft)	face	tail	Wb (lb)	xb (in)	Wa (lb)	xa (in)	Ws (lb)	xs (in)	we (in)	h_t	Internal
V6-28	28.0	1.50	0.0	-57.0	238	12.8	183	14.0	110	33.3			Internal Stability OK!
V6	44.0	1.50	0.0	-41.0	375	21.0	301	23.5	94	48.6			Internal Stability OK!
V24	43.0	3.00	0.0	-42.0	750	20.2	594	23.8	779	58.3			Internal Stability OK!
V24-86	85.0	3.00	0.0	0.0	950	39.0	1,621	44.1	0	0.0			Internal Stability OK!
V24-86	85.0	3.00	0.0	0.0	950	39.0	1,621	44.1	0	0.0			
													External Stability OK!
	85.0	12.00	0.0	-57.0	3,263	30.7	4,320	38.6	983	54.5			

backfill height 12.00 feet ω= 0.00 deg interface friction angle
exposed height 11.00 feet ω'= -21.60 deg δ 22.5 deg

Retained Soil γ 120 pcf, ϕ 30 deg

Foundation Soil γ 125 pcf, ϕ 26 deg, c' 150 psf

base embedment 12 in
base thickness 9 in
base material agg
toe slope H:1V slope

Aggregate Unit Fill γ 110 pcf

bearing pressure (if specified) n/a psf (net)

composite friction coefficient μ_b 0.69

© STONE STRONG SYSTEMS

STONE STRONG GRAVITY CALCULATIONS - ver 6.0

Project Name:	Example Calculations
Location:	
Job#:	20004.00
Section:	Example #1
Calc by:	D Thiele

Seismic Load PGA [ ] G site class (A to E or 1) [D] Fpga 1.60 Fa 1.60 k_h 0.00

Backfill Slope & Surcharge

	length		rise in grade		LL surcharge		tier height
length 1	30	feet (horizontal)		ft	250	psf	ft
length 2		feet (horizontal)		ft		psf	ft
length 3		feet (horizontal)		ft		psf	ft
length 4		feet (horizontal)		ft		psf	

effective slope H:1V slope β 0.0 deg avg q 250 psf

failure plane α 62.06 deg zone of influence 13.45 ft

Ground Surface & Trial Wedge Plot

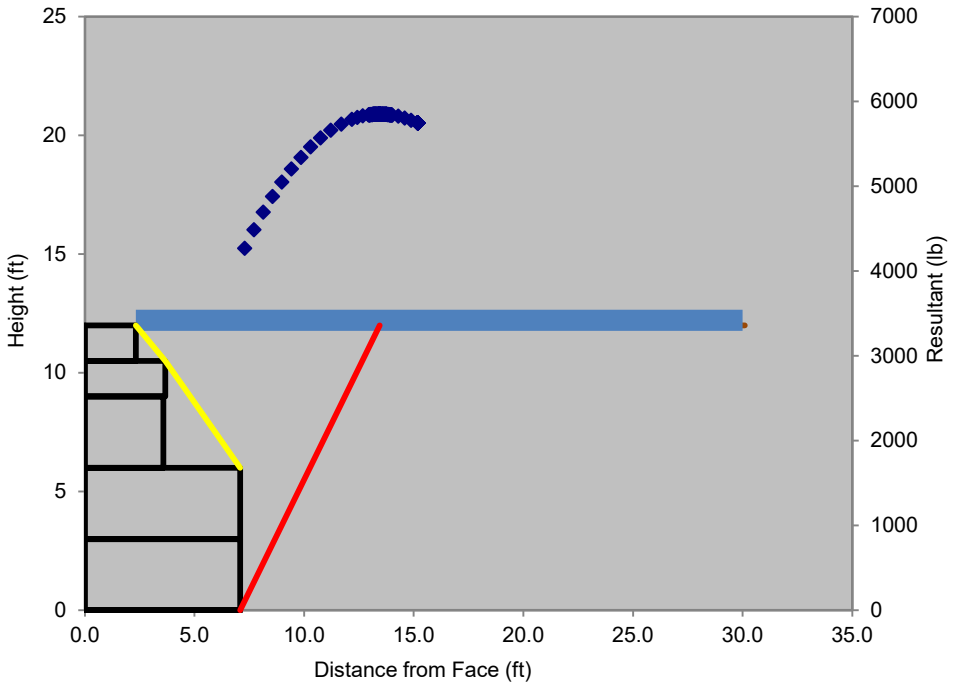

Unfactored Loads

K_a =	0.503	K_{AE} =	0.503
P_h =	3,119 lb	ΔK_{AE} =	0.000
P_v =	3,022 lb	P_{IR} =	0 lb
Q_{lh} =	1,083 lb	ΔP_{AEh} =	0 lb
Q_{lv} =	1,049 lb	ΔP_{AEv} =	0 lb

© S T O N E S T R O N G S Y S T E M S

STONE STRONG SYSTEMS®

STONE STRONG GRAVITY CALCULATIONS - ver 6.0

Project Name: Example Calculations
Location:
Job#: 20004.00
Section: Example #1
Calc by: D Thiele

2/20/20 15:51

	Load Cases:	Strngth I-a	Strngth I-b	Strngth IV	Extrme I-a (EQ)	Extrme I-b (EQ)	Extrme II (CT)	Service I	
Factored Loading	*Overturning (lb-ft):*	30,087	30,087	18,715	12,477	12,477	15,726	18,975	**OK!**
	Sliding (lb):	6,574	6,574	4,679	3,119	3,119	3,661	4,202	**OK!**
	Bearing (psf):	3,203	3,841	2,906	2,001	2,001	2,213	2,595	**OK!**
	e (ft):	1.65	1.51	1.00	0.96	0.96	1.15	1.38	**OK!**
	Bf' (ft):	4.77	5.03	6.00	6.08	6.08	5.72	5.29	
Factored Resistance	*Overturning (lb-ft):*	55,784	65,038	57,287	39,661	39,661	42,131	45,282	
	Sliding (lb):	7,762	9,628	8,732	7,151	7,151	7,407	7,947	
	Bearing (psf):	4,351	4,445	4,785	10,693	10,693	10,411	10,073	
	(@ top of base) Max e (ft):	2.36	2.36	2.36	2.83	2.83	2.83	2.36	
Load & Resistance Factors	LL	1.75	1.75	0.00	0.00	0.00	0.50	1.00	
	EH	1.50	1.50	1.50	1.00	1.00	1.00	1.00	
	EQ	0.00	0.00	0.00	1.00	1.00	0.00	0.00	
	CT	0.00	0.00	0.00	0.00	0.00	1.00	0.00	
	LL Surcharge over Wall	0.00	1.75	0.00	0.00	0.00	0.00	1.00	
	DC	0.90	1.25	1.50	1.00	1.00	1.00	1.00	
	EV	1.00	1.35	1.35	1.00	1.00	1.00	1.00	
	BC	0.45	0.45	0.45	1.00	1.00	1.00	1.00	
	ϕt precast to agg	0.90	0.90	0.90	1.00	1.00	1.00	1.00	
	ϕt CIP to agg/soil	0.80	0.80	0.80	1.00	1.00	1.00	1.00	
	ϕt soil to soil	0.90	0.90	0.90	1.00	1.00	1.00	1.00	
	ϕt precast to precast	0.90	0.90	0.90	1.00	1.00	1.00	1.00	
	concrete interface - eccentricity limit	0.45	0.45	0.45	0.40	0.40	0.45	0.45	
	bearing on soil - eccentricity limit	0.33	0.33	0.33	0.40	0.40	0.40	0.33	

© S T O N E S T R O N G S Y S T E M S

STONE STRONG SYSTEMS

STONE STRONG GRAVITY CALCULATIONS - ver 6.0

Project Name: Example Calculations
Location:
Job#: 20004.00
Section: Example #1
Calc by: D Thiele

(AASHTO 8th Edition, 2017)

2/20/20 15:51

Notes 12.0 tall wall with extended precast units, vertical face
level back slope, no foreslope or siesmic, 250 psf roadway surcharge
Internal Stability

Wall Configuration

			setback (in)		modular units		unit fill		soil wedge		CIP Extension		
unit	w (in)	h (ft)	face	tail	Wb (lb)	xb (in)	Wa (lb)	xa (in)	Ws (lb)	xs (in)	we (in)	h_t	Internal
V6-28	28.0	1.50	0.0	-15.0	238	11.8	183	13.0	110	32.3			Internal Stability OK!
V6	44.0	1.50	0.0	1.0	375	20.0	301	22.5	0	0.0			Internal Stability OK!
V24	43.0	3.00	0.0	0.0	750	19.2	594	22.8	0	0.0			
													Internal Stability OK!
	43.0	6.00	0.0	-15.0	1,363	18.1	1,078	21.1	110	32.3			

backfill height 6.00 feet

ω= 0.00 deg
ω'= -11.77 deg

interface friction angle
δ 22.5 deg

Retained Soil

γ 120 pcf
ϕ 30 deg

Internal ONLY

Aggregate Unit Fill

γ 110 pcf

© STONE STRONG SYSTEMS

STONE STRONG SYSTEMS

STONE STRONG GRAVITY CALCULATIONS - ver 6.0

Project Name:	Example Calculations
Location:	
Job#:	20004.00
Section:	Example #1
Calc by:	D Thiele

2/20/20 15:51

Seismic Load PGA [ ] G site class (A to E or 1) [D] Fpga 1.60 Fa 1.60 k_h 0.00

Backfill Slope & Surcharge

		rise in grade	LL surcharge	tier height
length 1	30 feet (horizontal)	ft	250 psf	ft
length 2	feet (horizontal)	ft	psf	ft
length 3	feet (horizontal)	ft	psf	ft
length 4	feet (horizontal)	ft	psf	

effective slope H:1V slope β 0.0 deg avg q 250 psf

failure plane α 59.43 deg zone of influence 7.13 ft

Ground Surface & Trial Wedge Plot

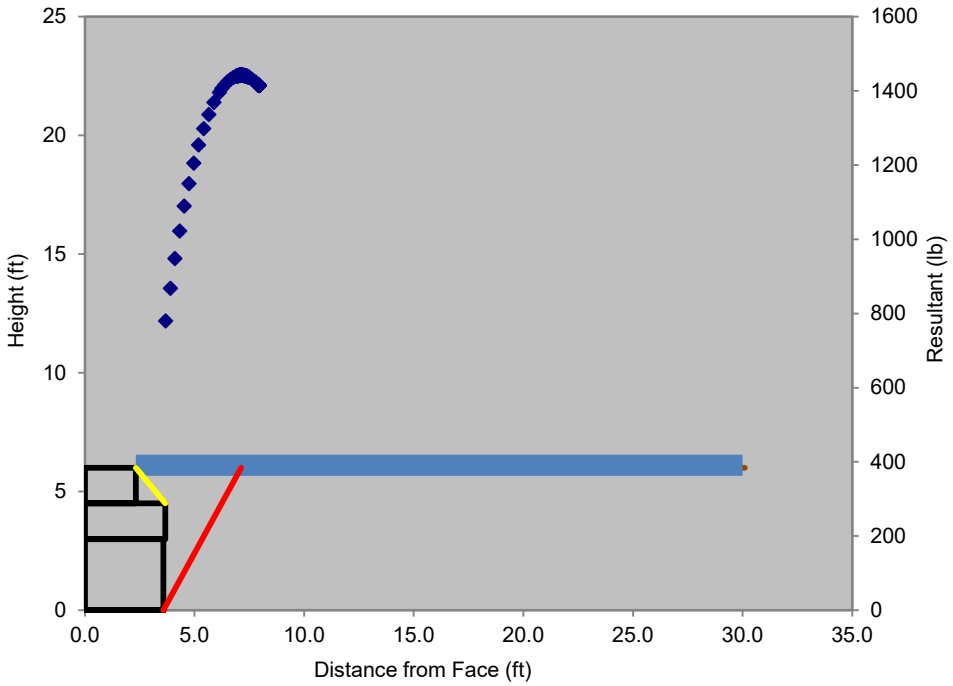

Unfactored Loads

K_a =	0.394	K_{AE} =	0.394
P_h =	703 lb	ΔK_{AE} =	0.000
P_v =	479 lb	P_{IR} =	0 lb
Q_{lh} =	488 lb	ΔP_{AEh} =	0 lb
Q_{lv} =	333 lb	ΔP_{AEv} =	0 lb

© STONE STRONG SYSTEMS

STONE STRONG SYSTEMS®

STONE STRONG GRAVITY CALCULATIONS - ver 6.0

Project Name: Example Calculations
Location:
Job#: 20004.00
Section: Example #1
Calc by: D Thiele

	Load Cases:	Strngth I-a	Strngth I-b	Strngth IV	Extrme I-a (EQ)	Extrme I-b (EQ)	Extrme II (CT)	Service I	
Factored Loading	*Overturning (lb-ft):*	4,674	4,674	2,110	1,407	1,407	2,139	2,872	**OK!**
	Sliding (lb):	1,910	1,910	1,055	703	703	948	1,192	**OK!**
	Bearing (psf):								**OK!**
	e (ft):	0.94	0.76	0.38	0.36	0.36	0.52	0.67	**OK!**
	Bf' (ft):								
Factored Resistance	*Overturning (lb-ft):*	7,493	9,932	7,666	5,285	5,285	5,764	6,874	
	Sliding (lb):	2,685	3,900	3,098	2,499	2,499	2,617	3,146	
	Bearing (psf):								
	(@ interface) Max e (ft):	1.58	1.58	1.58	1.40	1.40	1.58	1.58	
Load & Resistance Factors	LL	1.75	1.75	0.00	0.00	0.00	0.50	1.00	
	EH	1.50	1.50	1.50	1.00	1.00	1.00	1.00	
	EQ	0.00	0.00	0.00	1.00	1.00	0.00	0.00	
	CT	0.00	0.00	0.00	0.00	0.00	1.00	0.00	
	LL Surcharge over Wall	0.00	1.75	0.00	0.00	0.00	0.00	1.00	
	DC	0.90	1.25	1.50	1.00	1.00	1.00	1.00	
	EV	1.00	1.35	1.35	1.00	1.00	1.00	1.00	
	BC	0.45	0.45	0.45	1.00	1.00	1.00	1.00	
	ϕt precast to agg	0.90	0.90	0.90	1.00	1.00	1.00	1.00	
	ϕt CIP to agg/soil	0.80	0.80	0.80	1.00	1.00	1.00	1.00	
	ϕt soil to soil	0.90	0.90	0.90	1.00	1.00	1.00	1.00	
	ϕt precast to precast	0.90	0.90	0.90	1.00	1.00	1.00	1.00	
	concrete interface - eccentricity limit	0.45	0.45	0.45	0.40	0.40	0.45	0.45	
	bearing on soil - eccentricity limit	0.33	0.33	0.33	0.40	0.40	0.40	0.33	

© S T O N E S T R O N G S Y S T E M S

STONE STRONG SYSTEMS®

STONE STRONG GRAVITY CALCULATIONS - ver 6.0

Project Name: Example Calculations
Location:
Job#: 20004.00
Section: Example #2
Calc by: D Thiele

(AASHTO 8th Edition, 2017)

2/20/20 15:51

Notes 12.0 tall wall with tail extension, battered face
3H:1V backslope, no foreslope or siesmic
External Stability

Wall Configuration

			setback (in)		modular units		unit fill		soil wedge		CIP Extension		
unit	w (in)	h (ft)	face	tail	Wb (lb)	xb (in)	Wa (lb)	xa (in)	Ws (lb)	xs (in)	we (in)	h_t	Internal
6	44.0	1.50	14.0	-10.0	375	35.0	301	37.5	19	58.9			Internal Stability OK!
6	44.0	1.50	12.0	-12.0	375	33.0	301	35.5	85	59.2			Internal Stability OK!
24	44.0	3.00	8.0	-16.0	750	29.2	594	32.8	396	59.3			Internal Stability OK!
24	68.0	3.00	4.0	4.0	1,185	38.0	594	28.8	311	71.1	24	1/2 h	Internal Stability OK!
24	68.0	3.00	0.0	0.0	1,620	39.9	594	24.8	0	0.0	24		
													External Stability OK!
	68.0	12.00	14.0	-10.0	4,305	36.5	2,385	30.7	811	63.8			

backfill height 12.00 feet ω= 6.34 deg interface friction angle
exposed height 11.00 feet ω'= -3.97 deg δ 22.5 deg

Retained Soil
γ 120 pcf
ϕ 30 deg

Foundation Soil
γ 125 pcf
ϕ 26 deg
c' 150 psf

base embedment 12 in
base thickness 9 in
base material agg
toe slope H:1V slope

bearing pressure n/a psf
(if specified) (net)

Aggregate Unit Fill
γ 110 pcf

composite friction coefficient μ_b 0.74

© STONE STRONG SYSTEMS

STONE STRONG GRAVITY CALCULATIONS - ver 6.0

Project Name:	Example Calculations
Location:	
Job#:	20004.00
Section:	Example #2
Calc by:	D Thiele

Seismic Load PGA [ ] G site class (A to E or 1) [D] Fpga 1.60 Fa 1.60 k_h 0.00

Backfill Slope & Surcharge

		backslope		LL surcharge		tier height
length 1	30 feet (horizontal)	3	H:1V slope		psf	ft
length 2	feet (horizontal)		H:1V slope		psf	ft
length 3	feet (horizontal)		H:1V slope		psf	ft
length 4	feet (horizontal)		H:1V slope		psf	

effective slope 3.00 H:1V slope β 18.4 deg avg q 0 psf

failure plane α 49.71 deg zone of influence 20.18 ft

Ground Surface & Trial Wedge Plot

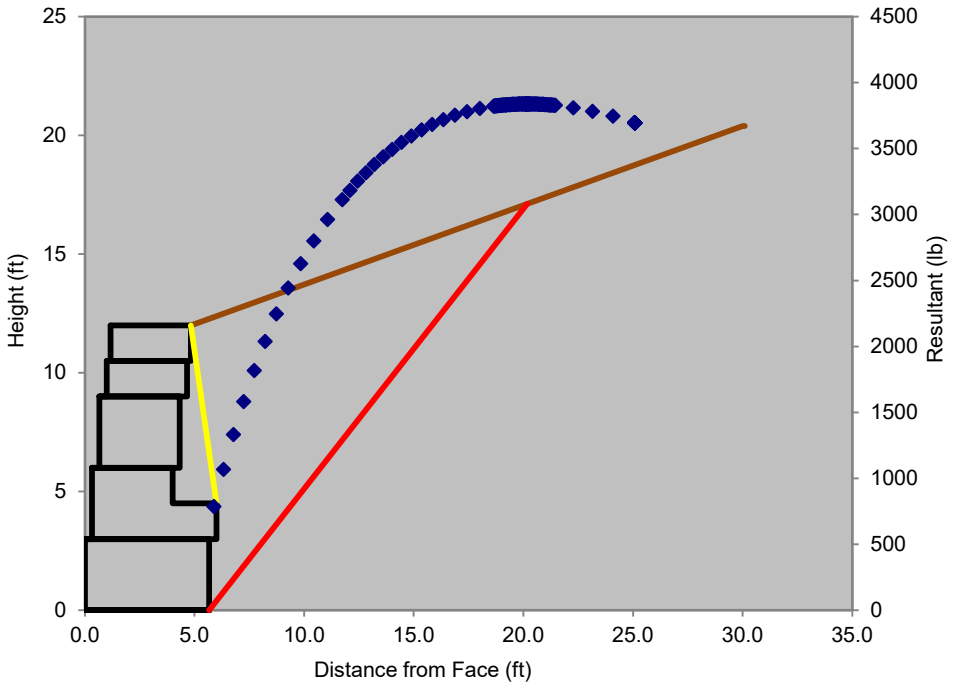

Unfactored Loads

K_a =	0.444	K_{AE} =	0.444
P_h =	3,436 lb	ΔK_{AE} =	0.000
P_v =	1,711 lb	P_{IR} =	0 lb
Q_{lh} =	0 lb	ΔP_{AEh} =	0 lb
Q_{lv} =	0 lb	ΔP_{AEv} =	0 lb

© STONE STRONG SYSTEMS

STONE STRONG SYSTEMS®

STONE STRONG GRAVITY CALCULATIONS - ver 6.0

Project Name: Example Calculations
Location:
Job#: 20004.00
Section: Example #2
Calc by: D Thiele

2/20/20 15:51

	Load Cases:	Strngth I-a	Strngth I-b	Strngth IV	Extrme I-a (EQ)	Extrme I-b (EQ)	Extrme II (CT)	Service I	
Factored Loading	*Overturning (lb-ft):*	20,615	20,615	20,615	13,744	13,744	13,744	13,744	**OK!**
	Sliding (lb):	5,154	5,154	5,154	3,436	3,436	3,436	3,436	**OK!**
	Bearing (psf):	2,581	2,803	2,928	1,985	1,985	1,985	1,985	**OK!**
	e (ft):	1.35	1.01	0.90	0.86	0.86	0.86	0.86	**OK!**
	Bf' (ft):	3.95	4.61	4.79	4.87	4.87	4.87	4.87	
Factored Resistance	*Overturning (lb-ft):*	33,944	41,442	44,713	30,643	30,643	30,643	30,643	
	Sliding (lb):	5,330	6,564	7,036	5,715	5,715	5,715	5,715	
	Bearing (psf):	4,062	4,293	4,357	9,749	9,749	9,749	9,749	
	(@ top of base) Max e (ft):	1.89	1.89	1.89	2.27	2.27	2.27	1.89	
Load & Resistance Factors	LL	1.75	1.75	0.00	0.00	0.00	0.50	1.00	
	EH	1.50	1.50	1.50	1.00	1.00	1.00	1.00	
	EQ	0.00	0.00	0.00	1.00	1.00	0.00	0.00	
	CT	0.00	0.00	0.00	0.00	0.00	1.00	0.00	
	LL Surcharge over Wall	0.00	1.75	0.00	0.00	0.00	0.00	1.00	
	DC	0.90	1.25	1.50	1.00	1.00	1.00	1.00	
	EV	1.00	1.35	1.35	1.00	1.00	1.00	1.00	
	BC	0.45	0.45	0.45	1.00	1.00	1.00	1.00	
	ϕt precast to agg	0.90	0.90	0.90	1.00	1.00	1.00	1.00	
	ϕt CIP to agg/soil	0.80	0.80	0.80	1.00	1.00	1.00	1.00	
	ϕt soil to soil	0.90	0.90	0.90	1.00	1.00	1.00	1.00	
	ϕt precast to precast	0.90	0.90	0.90	1.00	1.00	1.00	1.00	
	concrete interface - eccentricity limit	0.45	0.45	0.45	0.40	0.40	0.45	0.45	
	bearing on soil - eccentricity limit	0.33	0.33	0.33	0.40	0.40	0.40	0.33	

© S T O N E S T R O N G S Y S T E M S

STONE STRONG SYSTEMS

STONE STRONG GRAVITY CALCULATIONS - ver 6.0

Project Name: Example Calculations
Location:
Job#: 20004.00
Section: Example #2
Calc by: D Thiele

(AASHTO 8th Edition, 2017)

2/20/20 15:51

Notes
12.0 tall wall with tail extension, battered face
3H:1V backslope, no foreslope or siesmic
Internal Stability

Wall Configuration

			setback (in)		modular units		unit fill		soil wedge		CIP Extension		
unit	w (in)	h (ft)	face	tail	Wb (lb)	xb (in)	Wa (lb)	xa (in)	Ws (lb)	xs (in)	we (in)	h_t	Internal
6	44.0	1.50	6.0	6.0	375	26.0	301	28.5					Internal Stability OK!
6	44.0	1.50	4.0	4.0	375	24.0	301	26.5					Internal Stability OK!
24	44.0	3.00	0.0	0.0	750	20.2	594	23.8					
													Internal Stability OK!
	44.0	6.00	6.0	6.0	1,500	22.6	1,196	25.7	0	0.0			

backfill height **6.00** feet

ω= 6.34 deg
ω'= 6.34 deg

interface friction angle
δ 15.0 deg

Retained Soil

γ **120** pcf
ϕ **30** deg

Internal ONLY

Aggregate Unit Fill

γ **110** pcf

© STONE STRONG SYSTEMS

STONE STRONG SYSTEMS

STONE STRONG GRAVITY CALCULATIONS - ver 6.0

Project Name: Example Calculations
Location:
Job#: 20004.00
Section: Example #2
Calc by: D Thiele

Seismic Load PGA [ ] G site class (A to E or 1) [D] Fpga 1.60 Fa 1.60 k_h 0.00

Backfill Slope & Surcharge

		backslope	LL surcharge	tier height
length 1	30 feet (horizontal)	3 H:1V slope	psf	ft
length 2	feet (horizontal)	H:1V slope	psf	ft
length 3	feet (horizontal)	H:1V slope	psf	ft
length 4	feet (horizontal)	H:1V slope	psf	

effective slope 3.00 H:1V slope β 18.4 deg avg q 0 psf
failure plane α 48.61 deg zone of influence 10.88 ft

Ground Surface & Trial Wedge Plot

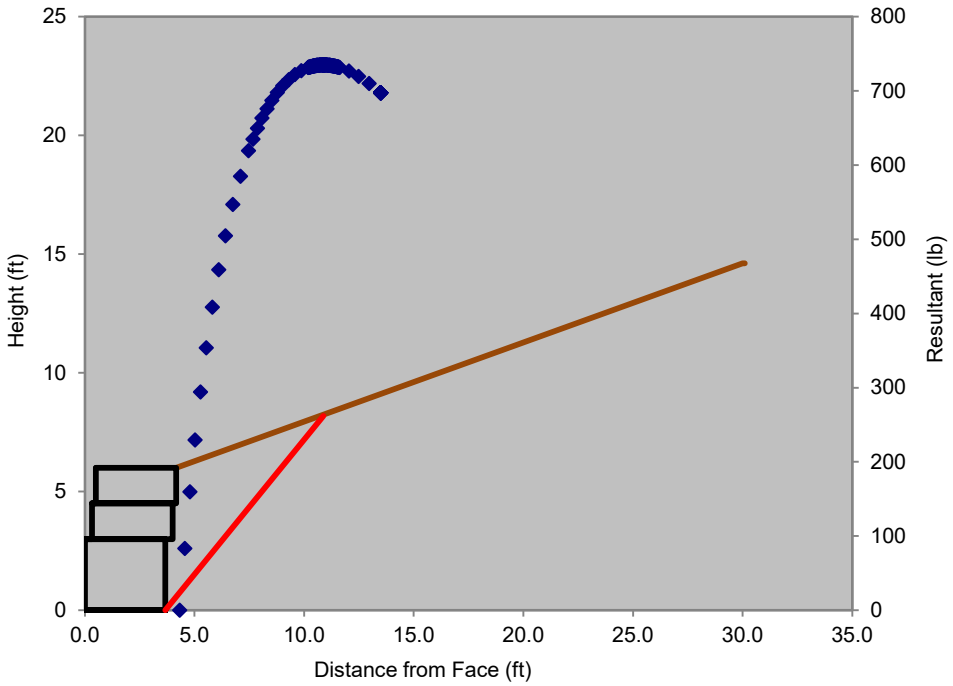

Unfactored Loads

K_a =	0.340	K_{AE} =	0.340
P_h =	727 lb	ΔK_{AE} =	0.000
P_v =	111 lb	P_{IR} =	0 lb
Q_{lh} =	0 lb	ΔP_{AEh} =	0 lb
Q_{lv} =	0 lb	ΔP_{AEv} =	0 lb

© STONE STRONG SYSTEMS

STONE STRONG SYSTEMS®

STONE STRONG GRAVITY CALCULATIONS - ver 6.0

Project Name: Example Calculations
Location:
Job#: 20004.00
Section: Example #2
Calc by: D Thiele

	Load Cases:	Strngth I-a	Strngth I-b	Strngth IV	Extrme I-a (EQ)	Extrme I-b (EQ)	Extrme II (CT)	Service I	
Factored Loading	*Overturning (lb-ft):*	2,180	2,180	2,180	1,453	1,453	1,453	1,453	**OK!**
	Sliding (lb):	1,090	1,090	1,090	727	727	727	727	**OK!**
	Bearing (psf):								**OK!**
	e (ft):	0.56	0.37	0.32	0.30	0.30	0.30	0.30	**OK!**
	Bf' (ft):								
Factored Resistance	*Overturning (lb-ft):*	5,221	6,926	7,632	5,293	5,293	5,293	5,293	
	Sliding (lb):	2,048	2,647	2,885	2,342	2,342	2,342	2,342	
	Bearing (psf):								
	(@ interface) Max e (ft):	1.61	1.61	1.61	1.43	1.43	1.61	1.61	
Load & Resistance Factors	LL	1.75	1.75	0.00	0.00	0.00	0.50	1.00	
	EH	1.50	1.50	1.50	1.00	1.00	1.00	1.00	
	EQ	0.00	0.00	0.00	1.00	1.00	0.00	0.00	
	CT	0.00	0.00	0.00	0.00	0.00	1.00	0.00	
	LL Surcharge over Wall	0.00	1.75	0.00	0.00	0.00	0.00	1.00	
	DC	0.90	1.25	1.50	1.00	1.00	1.00	1.00	
	EV	1.00	1.35	1.35	1.00	1.00	1.00	1.00	
	BC	0.45	0.45	0.45	1.00	1.00	1.00	1.00	
	ϕt precast to agg	0.90	0.90	0.90	1.00	1.00	1.00	1.00	
	ϕt CIP to agg/soil	0.80	0.80	0.80	1.00	1.00	1.00	1.00	
	ϕt soil to soil	0.90	0.90	0.90	1.00	1.00	1.00	1.00	
	ϕt precast to precast	0.90	0.90	0.90	1.00	1.00	1.00	1.00	
	concrete interface - eccentricity limit	0.45	0.45	0.45	0.40	0.40	0.45	0.45	
	bearing on soil - eccentricity limit	0.33	0.33	0.33	0.40	0.40	0.40	0.33	

© S T O N E S T R O N G S Y S T E M S

2.1.3 REINFORCEMENT OBSTRUCTIONS

Paraweb Obstruction Details

© Stone Strong Systems

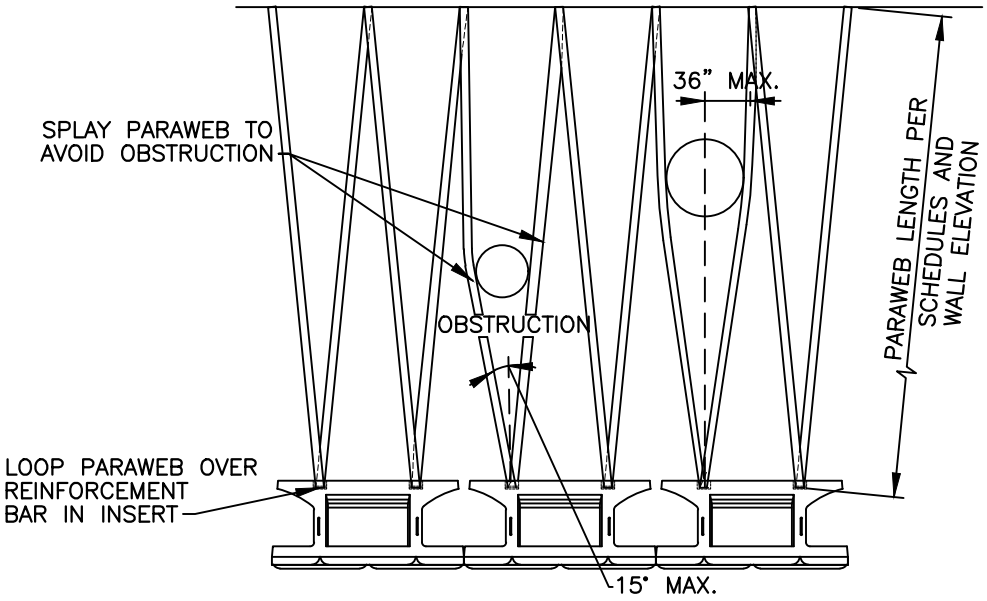

PLAN VIEW

PARAWEB OBSTRUCTION DETAIL

NOT TO SCALE

DISCLAIMER:

These typical details are preliminary and conceptual in nature. They are provided for general information purposes only. Anyone making use of these details and related information does so at their own risk and assumes all liability for such use. Site specific design should be performed by a licensed Professional Engineer based on actual site conditions, materials, and local practices.

Stone Strong LLC retains al common law, statutory, and other reserved rights to these drawings including the copyright. Limited license is granted to copy, reproduce, or modify the details to prepare construction drawings for Stone Strong retaining walls. Stone Strong LLC makes no warranties, either expressed or implied, of merchantability or fitness for any particular purpose, and accepts no responsibility for the accuracy, suitability, or completeness of information contained herein.

STONE STRONG SYSTEMS®

www.stonestrong.com

PROJECT

TYPICAL DETAILS
STONE STRONG SYSTEMS

DATE: 9/30/20 | FILE: PARAWEB OBSTRUCTIO L

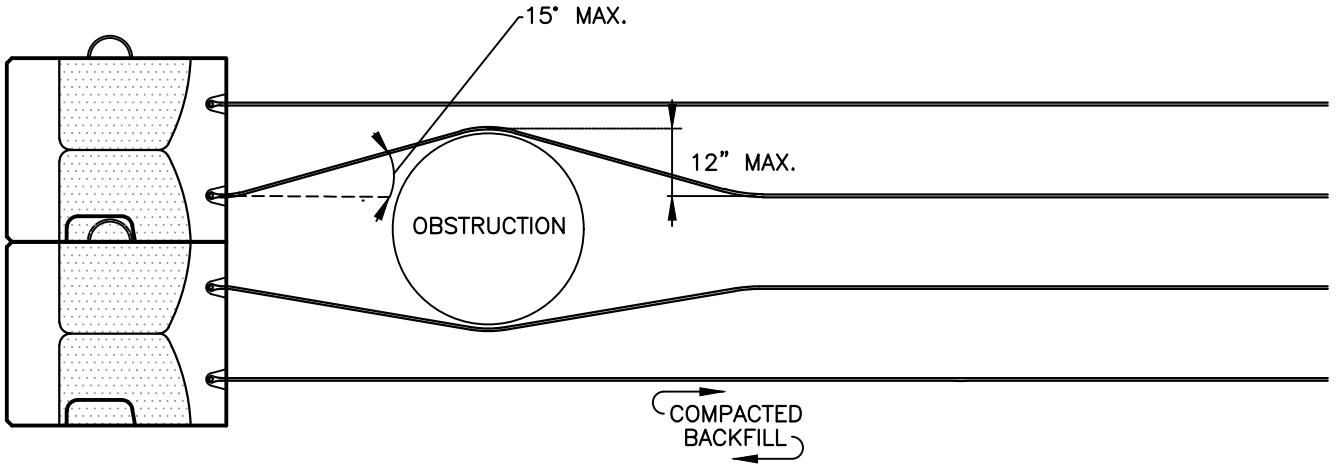

CROSS SECTION

PARAWEB OBSTRUCTION CROSS SECTION

NOT TO SCALE

DISCLAIMER:

These typical details are preliminary and conceptual in nature. They are provided for general information purposes only. Anyone making use of these details and related information does so at their own risk and assumes all liability for such use. Site specific design should be performed by a licensed Professional Engineer based on actual site conditions, materials, and local practices.

Stone Strong LLC retains al common law, statutory, and other reserved rights to these drawings including the copyright. Limited license is granted to copy, reproduce, or modify the details to prepare construction drawings for Stone Strong retaining walls. Stone Strong LLC makes no warranties, either expressed or implied, of merchantability or fitness for any particular purpose, and accepts no responsibility for the accuracy, suitability, or completeness of information contained herein.

STONE STRONG SYSTEMS®

www.stonestrong.com

PROJECT

PARAWEB DETAILS
STONE STRONG SYSTEMS

DATE: 9/29/20 | FILE: PARAWEBCSOBSTRUCTI

2.2.1 MSE DESIGN PROBLEM 1 (C1 CHECKLIST)

MSEW Output

© Stone Strong Systems

FHWA-NHI-10-024
Stone Strong - IDEA Submittal

MSEW(3.0): Update # 14.981

PROJECT IDENTIFICATION

Title: Stone Strong - IDEA Submittal
Project Number: 20004 00
Client: Stone Strong Systems
Designer: BJP
Station Number: 134

Description:

Problem 1. Traffic Load with barrier. 30 ft Height Wall with 4 connections per unit. Installation strap lengths shall be 3 ft less than calculated.

Company's information:

Name: Thiele Geotech
Street: 13478 Chandler Road

Omaha, NE 68138
Telephone #: (402) 556-2171
Fax #: (402) 556-7831
E-Mail:

Original file path and name: P:\20004.00\Agency Approvals\Geo-Institute\IDEA\MSEW\Pr..... .....- Revised 1-6-21.BEN

Original date and time of creating this file: Thu Mar 31 08:22:52 2016

PROGRAM MODE: ANALYSIS of a SIMPLE STRUCTURE using GEOGRID as reinforcing material.

Copyright © 1998-2019 ADAMA Engineering, Inc.
License number MSEW-301330

SOIL DATA

REINFORCED SOIL

Unit weight,	γ	135.0 lb/ft ^{3}
Design value of internal angle of friction,	ϕ	34.0 °

RETAINED SOIL

Unit weight,	γ	120.0 lb/ft ^{3}
Design value of internal angle of friction,	ϕ	30.0 °

FOUNDATION SOIL (Considered as an equivalent uniform soil)

Equivalent unit weight,	$\gamma_{equiv.}$	120.0 lb/ft ^{3}
Equivalent internal angle of friction,	$\phi_{equiv.}$	30.0 °
Equivalent cohesion,	$c_{equiv.}$	0.0 lb/ft ^{2}

Water table does not affect bearing capacity

LATERAL EARTH PRESSURE COEFFICIENTS

Ka (internal stability) = 0.2827 (if batter is less than 10°, Ka is calculated from eq. 15. Otherwise, eq. 38 is utilized)
Inclination of internal slip plane, ψ = 62.00° (see Fig. 28 in DEMO 82).
Ka (external stability) = 0.3333 (if batter is less than 10°, Ka is calculated from eq. 16. Otherwise, eq. 17 is utilized)

BEARING CAPACITY

Bearing capacity coefficients (calculated by MSEW): Nc = 30.14 N γ = 22.40

SEISMICITY

Not Applicable

Copyright © 1998-2019 ADAMA Engineering, Inc.
License number MSEW-301330

INPUT DATA: Geogrids (Analysis)

D A T A	Geogrid type #1	Geogrid type #2	Geogrid type #3	Geogrid type #4	Geogrid type #5
Tult [lb/ft]	38101.0	38101.0			
Durability reduction factor, RFd	1.15	1.15			
Installation-damage reduction factor, RFid	1.10	1.10			
Creep reduction factor, RFc	1.36	1.36	N/A	N/A	N/A
CDR for strength	N/A	N/A			
Coverage ratio, Rc	0.147	0.147			
Friction angle along geogrid-soil interface, ρ	25.27	25.27			
Pullout resistance factor, F*	$1.00 \cdot \tan\phi$	$0.80 \cdot \tan\phi$	N/A	N/A	N/A
Scale-effect correction factor, α	0.8	0.8			

Variation of Lateral Earth Pressure Coefficient With Depth

Z	K / Ka
0 ft	1.00
3.3 ft	1.00
6.6 ft	1.00
9.8 ft	1.00
13.1 ft	1.00
16.4 ft	1.00
19.7 ft	1.00

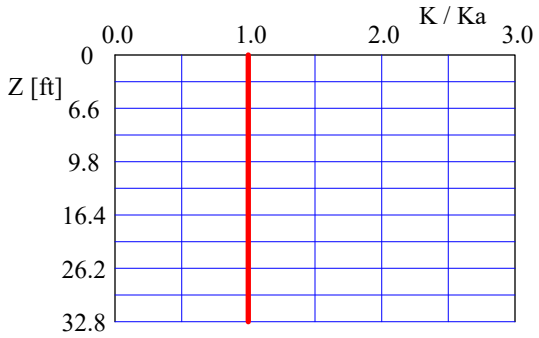

Copyright © 1998-2019 ADAMA Engineering, Inc.
License number MSEW-301330

INPUT DATA: Facia and Connection (according to revised Demo 82) (Analysis)

FACIA type: Facing enabling frictional connection of reinforcement (e.g., modular concrete blocks, gabions)
Depth/height of block is 3.67/3.00 ft. Horizontal distance to Center of Gravity of block is 1.90 ft.
Average unit weight of block is γ_f = 122.20 lb/ft ³

Z / Hd	To-static / Tmax
0.00	1.00
0.25	1.00
0.50	1.00
0.75	1.00
1.00	1.00

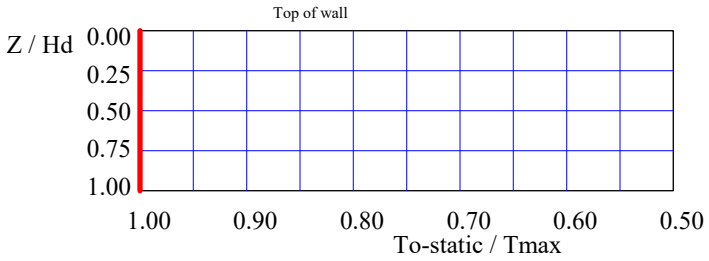

Geogrid Type #1		Geogrid Type #2		Geogrid Type #3		Geogrid Type #4		Geogrid Type #5	
σ (1)	CRult (2)	σ	CRult	σ	CRult	σ	CRult	σ	CRult
0.0	0.63	0.0	0.63						
10000.0	0.63	10000.0	0.63	N/A		N/A		N/A	

Geogrid Type #1[3]		Geogrid Type #2		Geogrid Type #3		Geogrid Type #4		Geogrid Type #5	
σ	CRcr	σ	CRcr	σ	CRcr	σ	CRcr	σ	CRcr
0.0	0.63	0.0	0.63						
10000.0	0.63	10000.0	0.63	N/A		N/A		N/A	

(1) σ = Confining stress in between stacked blocks [lb/ft ²]
(2) CRult = Tc-ult / Tult
(3) CRcr = Tcre / Tult

D A T A (for connection only)	Type #1	Type #2	Type #3	Type #4	Type #5
Product Name	Paraweb 2..	Paraweb 2..	N/A	N/A	N/A
Connection strength reduction factor, RFd	1.00	1.00	N/A	N/A	N/A
Creep reduction factor, RFc	N/A	N/A	N/A	N/A	N/A

Copyright © 1998-2019 ADAMA Engineering, Inc.
License number MSEW-301330

INPUT DATA: Geometry and Surcharge loads (of a SIMPLE STRUCTURE)

Design height, Hd	31.00	[ft]	{ Embedded depth is E = 1.00 ft, and height above top of finished bottom grade is H = 30.00 ft }
Batter, ω	0.0	[deg]	
Backslope, β	0.0	[deg]	
Backslope rise	0.0	[ft]	Broken back equivalent angle, I = 0.00° (see Fig. 25 in DEMO 82)

U N I F O R M S U R C H A R G E

Uniformly distributed dead load is 0.0 [lb/ft ²], and live load is 250.0 [lb/ft ²]

ANALYZED REINFORCEMENT LAYOUT:

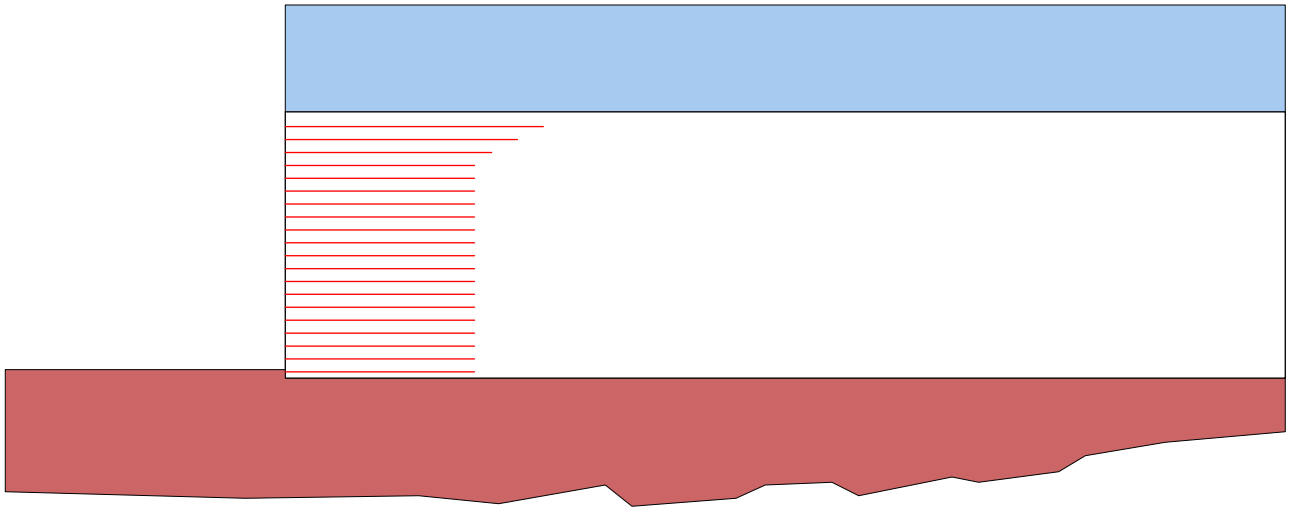

SCALE:

0 5 10 15 20 25 30 [ft]

Copyright © 1998-2019 ADAMA Engineering, Inc.
License number MSEW-301330

INPUT DATA: Traffic Barrier

IMPORTANT: Traffic surcharge and its load factor for Impact Load could be different than the values specified for LL in internal / external stability. Traffic surcharge is modeled as a uniform load generated by a reinforced soil layer; typically 2 ft (0.6 m) high. Traffic surcharge is equal to: 250.00 [psf]

Load fact r on traffic surcharge, γ p-EV-impact =1.35 Note that it make sense to use the same default load factor as for soil weight (γ p-EV = 1.35) since this surcharge is modeled as an equivalent soil layer.

Considering reinforcement rupture, the impact equivalent load in: Top layer 250.00 [lb/ft]
Layer underneath 250.00 [lb/ft]

Creep reduction factors, RFcr, NEGLECTED for impact load component

Considering increase in pullout capacity, the added pullout load in: Top layer 0.00 [lb/ft]
Layer underneath 0.00 [lb/ft]

Resistance factors for tensile strength and connection for combined static and traffic barrier impact loads:

	Strength	Connection
Geosynthetics	1.200	1.200
Metal Mat	0.850	0.850
Metal Strip	1.000	1.000

Pullout resistance factor 1.000

RESULTS: Traffic Barrier

Rupture is considered at connection.

	Layer Number	Elevation [ft]	STRENGTH T max + T impact / RFc [lb/ft]	CDR	CONNECTION To + T impact / RFc [lb/ft]	CDR	PULLOUT T max + T impact [lb/ft]	CDR
Top Layer	20	29.25	583.38	6.719	583.38	6.719	399.56	5.825
Layer Below	19	27.75	578.13	6.780	578.13	6.780	394.31	7.499

Copyright © 1998-2019 ADAMA Engineering, Inc.
License number MSEW-301330

AASHTO 2007-2010 (LRFD) Input Data

INTERNAL STABILITY

Load factor for vertical earth pressure, EV, from Table 3.4.1-2:	$\gamma_{p\text{-}EV}$	1.35	
Load factor for earthquake loads, EQ, from Table 3.4.1-1:	$\gamma_{p\text{-}EQ}$	1.00	
Load factor for live load surchrge, LS, from Figure C11.5.5-3(b): (Same as in External Stability).	$\gamma_{p\text{-}LS}$	1.75	
Load factor for dead load surchrge, ES: (Same as in External Stability).	$\gamma_{p\text{-}ES}$	1.50	

Resistance factor for reinforcement tension from Table 11.5.6-1:	ϕ	Static	Combined static/seismic
Geogrid:		0.90	1.20

Resistance factor for reinforcement tension in connectors from Table 11.5.6-1:	ϕ	Static	Combined static/seismic
Geogrid:		0.90	1.20

Resistance factor for reinforcement pullout from Table 11.5.6-1:	ϕ	0.90	1.20

EXTERNAL STABILITY

Load factor for vertical earth pressure, EV, from Table 3.4.1-2 and Figure C11.5.5-2:		Static	Combined Static/Seismic	
Sliding and Eccentricity	$\gamma_{p\text{-}EV}$	1.00	$\gamma_{p\text{-}EQ}$	1.00
Bearing Capacity	$\gamma_{p\text{-}EV}$	1.35	$\gamma_{p\text{-}EQ}$	1.35

Load factor of active lateral earth pressure, EH, from Table 3.4.1-2 and Figure C11.5.5-2:	$\gamma_{p\text{-}EH}$	1.50
Load factor of active lateral earth pressure during earthquake (does not multiply P_{AE} and P_{IR}):	$(\gamma_{p\text{-}EH})_{EQ}$	1.50
Load factor for earthquake loads, EQ, from Table 3.4.1-1 (multiplies P_{AE} and P_{IR}):	$\gamma_{p\text{-}EQ}$	1.00

Resistance factor for shear resistance along common interfaces from Table 11.5.6-1:		Static	Combined Static/Seismic	
Reinforced Soil and Foundation	ϕ_τ	1.00		1.00
Reinforced Soil and Reinforcement	ϕ_τ	1.00		1.00

Resistance factor for bearing capacity of shallow foundation from Table 11.5.6-1:		Static	Combined Static/Seismic
	ϕ_b	0.65	0.65

Copyright © 1998-2019 ADAMA Engineering, Inc.
License number MSEW-301330

ANALYSIS: CALCULATED FACTORS (Static conditions)

Bearing capacity, CDR = 1.78, factored bearing load = 8114 lb/ft².
Foundation Interface: Direct sliding, CDR = 1.594, Eccentricity, e/L = 0.1817, CDR-overturning = 2.75

GEOGRID #	Elevation [ft]	Length [ft]	Type #	CONNECTION CDR [connection strength]	CDR [geogrid strength]	Geogrid strength CDR	Pullout resistance CDR	Direct sliding CDR	Eccentricity e/L	Product name
1	0.75	22.00	2	1.26	1.17	1.165	4.005	1.818	0.1738	Paraweb 2D..
2	2.25	22.00	2	1.32	1.22	1.221	3.843	1.899	0.1586	Paraweb 2D..
3	3.75	22.00	2	1.39	1.28	1.283	3.681	1.987	0.1441	Paraweb 2D..
4	5.25	22.00	2	1.46	1.35	1.351	3.516	2.085	0.1302	Paraweb 2D..
5	6.75	22.00	2	1.55	1.43	1.427	3.353	2.192	0.1171	Paraweb 2D..
6	8.25	22.00	2	1.64	1.51	1.512	3.189	2.311	0.1046	Paraweb 2D..
7	9.75	22.00	2	1.74	1.61	1.608	3.023	2.444	0.0928	Paraweb 2D..
8	11.25	22.00	2	1.86	1.72	1.717	2.858	2.593	0.0817	Paraweb 2D..
9	12.75	22.00	2	2.00	1.84	1.842	2.693	2.761	0.0713	Paraweb 2D..
10	14.25	22.00	2	2.15	1.99	1.986	2.524	2.953	0.0616	Paraweb 2D..
11	15.75	22.00	2	2.34	2.16	2.155	2.356	3.173	0.0526	Paraweb 2D..
12	17.25	22.00	2	2.55	2.36	2.355	2.186	3.429	0.0443	Paraweb 2D..
13	18.75	22.00	2	2.81	2.60	2.596	2.012	3.730	0.0366	Paraweb 2D..
14	20.25	22.00	2	3.14	2.89	2.893	1.837	4.088	0.0297	Paraweb 2D..
15	21.75	22.00	2	3.54	3.27	3.265	1.658	4.523	0.0234	Paraweb 2D..
16	23.25	22.00	2	4.06	3.75	3.748	1.472	5.061	0.0178	Paraweb 2D..
17	24.75	22.00	1	4.77	4.40	4.397	1.597	5.744	0.0130	Paraweb 2D..
18	26.25	24.00	1	5.77	5.32	5.320	1.668	7.244	0.0074	Paraweb 2D..
19	27.75	27.00	1	7.30	6.73	6.732	1.762	9.656	0.0035	Paraweb 2D..
20	29.25	30.00	1	6.78	6.25	6.252	1.040	13.164	0.0013	Paraweb 2D..

Copyright © 1998-2019 ADAMA Engineering, Inc.
License number MSEW-301330

BEARING CAPACITY for GIVEN LAYOUT

	STATIC	SEISMIC	UNITS
(Water table does not affect bearing capacity)			
Factored bearing resistance. q-n	14420	N/A	[lb/ft ²]
Factored bearing load, σ_V	8114.2	N/A	[lb/ft ²]
Eccentricity, e	2.75	N/A	[ft]
Eccentricity, e/L	0.125	N/A	
CDR calculated	1.78	N/A	
Base length	22.00	N/A	[ft]

Unfactored applied bearing pressure = (Unfactored R) / [L - 2 * (Unfactored e)] =
Unfactored R = 97569.94 [lb/ft], L = 22.00, Unfactored e = 2.45 [ft], and Sigma = 5703.12 [lb/ft ²]

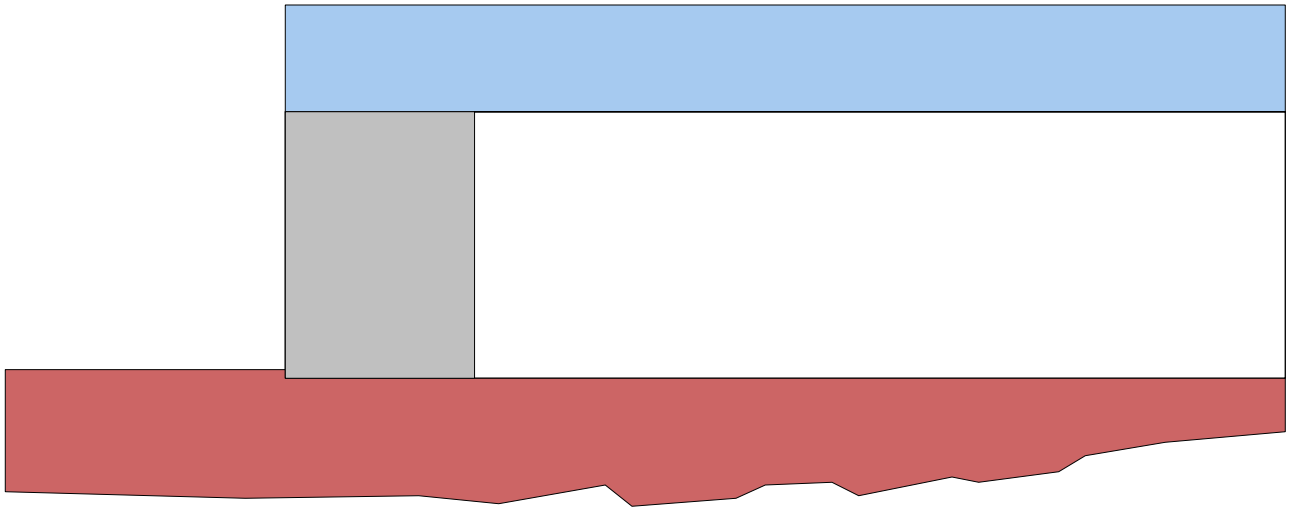

SCALE:

0 5 10 15 20 25 30 [ft]

Copyright © 1998-2019 ADAMA Engineering, Inc.
License number MSEW-301330

DIRECT SLIDING for GIVEN LAYOUT (for GEOGRID reinforcements)

Along reinforced and foundation soils interface: CDR-static = 1.594

#	Geogrid Elevation [ft]	Geogrid Length [ft]	CDR Static	CDR Seismic	Geogrid Type #	Product name
1	0.75	22.00	1.818	N/A	2	Paraweb 2D50 - 7+ ft
2	2.25	22.00	1.899	N/A	2	Paraweb 2D50 - 7+ ft
3	3.75	22.00	1.987	N/A	2	Paraweb 2D50 - 7+ ft
4	5.25	22.00	2.085	N/A	2	Paraweb 2D50 - 7+ ft
5	6.75	22.00	2.192	N/A	2	Paraweb 2D50 - 7+ ft
6	8.25	22.00	2.311	N/A	2	Paraweb 2D50 - 7+ ft
7	9.75	22.00	2.444	N/A	2	Paraweb 2D50 - 7+ ft
8	11.25	22.00	2.593	N/A	2	Paraweb 2D50 - 7+ ft
9	12.75	22.00	2.761	N/A	2	Paraweb 2D50 - 7+ ft
10	14.25	22.00	2.953	N/A	2	Paraweb 2D50 - 7+ ft
11	15.75	22.00	3.173	N/A	2	Paraweb 2D50 - 7+ ft
12	17.25	22.00	3.429	N/A	2	Paraweb 2D50 - 7+ ft
13	18.75	22.00	3.730	N/A	2	Paraweb 2D50 - 7+ ft
14	20.25	22.00	4.088	N/A	2	Paraweb 2D50 - 7+ ft
15	21.75	22.00	4.523	N/A	2	Paraweb 2D50 - 7+ ft
16	23.25	22.00	5.061	N/A	2	Paraweb 2D50 - 7+ ft
17	24.75	22.00	5.744	N/A	1	Paraweb 2D50 - 0-7..
18	26.25	24.00	7.244	N/A	1	Paraweb 2D50 - 0-7..
19	27.75	27.00	9.656	N/A	1	Paraweb 2D50 - 0-7..
20	29.25	30.00	13.164	N/A	1	Paraweb 2D50 - 0-7..

ECCENTRICITY for GIVEN LAYOUT

At interface with foundation: e/L static = 0.1817; Overturning: CDR-static = 2.75

#	Geogrid Elevation [ft]	Geogrid Length [ft]	e / L Static	e / L Seismic	Geogrid Type #	Product name
1	0.75	22.00	0.1738	N/A	2	Paraweb 2D50 - 7+ ft
2	2.25	22.00	0.1586	N/A	2	Paraweb 2D50 - 7+ ft
3	3.75	22.00	0.1441	N/A	2	Paraweb 2D50 - 7+ ft
4	5.25	22.00	0.1302	N/A	2	Paraweb 2D50 - 7+ ft
5	6.75	22.00	0.1171	N/A	2	Paraweb 2D50 - 7+ ft
6	8.25	22.00	0.1046	N/A	2	Paraweb 2D50 - 7+ ft
7	9.75	22.00	0.0928	N/A	2	Paraweb 2D50 - 7+ ft
8	11.25	22.00	0.0817	N/A	2	Paraweb 2D50 - 7+ ft
9	12.75	22.00	0.0713	N/A	2	Paraweb 2D50 - 7+ ft
10	14.25	22.00	0.0616	N/A	2	Paraweb 2D50 - 7+ ft
11	15.75	22.00	0.0526	N/A	2	Paraweb 2D50 - 7+ ft
12	17.25	22.00	0.0443	N/A	2	Paraweb 2D50 - 7+ ft
13	18.75	22.00	0.0366	N/A	2	Paraweb 2D50 - 7+ ft
14	20.25	22.00	0.0297	N/A	2	Paraweb 2D50 - 7+ ft
15	21.75	22.00	0.0234	N/A	2	Paraweb 2D50 - 7+ ft
16	23.25	22.00	0.0178	N/A	2	Paraweb 2D50 - 7+ ft
17	24.75	22.00	0.0130	N/A	1	Paraweb 2D50 - 0-7..
18	26.25	24.00	0.0074	N/A	1	Paraweb 2D50 - 0-7..
19	27.75	27.00	0.0035	N/A	1	Paraweb 2D50 - 0-7..
20	29.25	30.00	0.0013	N/A	1	Paraweb 2D50 - 0-7..

Copyright © 1998-2019 ADAMA Engineering, Inc.
License number MSEW-301330

RESULTS for STRENGTH

Live Load included in calculating Tmax

#	Geogrid Elevation [ft]	Tavailable [lb/ft]	Tmax [lb/ft]	Tmd [lb/ft]	Specified minimum CDR static	Actual calculated CDR static	Specified minimum CDR seismic	Actual calculated CDR seismic	Product name
1	0.75	19932	2523.47	N/A	N/A	1.165	N/A	N/A	Paraweb 2D..
2	2.25	19932	2407.54	N/A	N/A	1.221	N/A	N/A	Paraweb 2D..
3	3.75	19932	2291.61	N/A	N/A	1.283	N/A	N/A	Paraweb 2D..
4	5.25	19932	2175.68	N/A	N/A	1.351	N/A	N/A	Paraweb 2D..
5	6.75	19932	2059.75	N/A	N/A	1.427	N/A	N/A	Paraweb 2D..
6	8.25	19932	1943.81	N/A	N/A	1.512	N/A	N/A	Paraweb 2D..
7	9.75	19932	1827.88	N/A	N/A	1.608	N/A	N/A	Paraweb 2D..
8	11.25	19932	1711.95	N/A	N/A	1.717	N/A	N/A	Paraweb 2D..
9	12.75	19932	1596.02	N/A	N/A	1.842	N/A	N/A	Paraweb 2D..
10	14.25	19932	1480.09	N/A	N/A	1.986	N/A	N/A	Paraweb 2D..
11	15.75	19932	1364.16	N/A	N/A	2.155	N/A	N/A	Paraweb 2D..
12	17.25	19932	1248.23	N/A	N/A	2.355	N/A	N/A	Paraweb 2D..
13	18.75	19932	1132.30	N/A	N/A	2.596	N/A	N/A	Paraweb 2D..
14	20.25	19932	1016.37	N/A	N/A	2.893	N/A	N/A	Paraweb 2D..
15	21.75	19932	900.44	N/A	N/A	3.265	N/A	N/A	Paraweb 2D..
16	23.25	19932	784.51	N/A	N/A	3.748	N/A	N/A	Paraweb 2D..
17	24.75	19932	668.58	N/A	N/A	4.397	N/A	N/A	Paraweb 2D..
18	26.25	19932	552.65	N/A	N/A	5.320	N/A	N/A	Paraweb 2D..
19	27.75	19932	436.71	N/A	N/A	6.732	N/A	N/A	Paraweb 2D..
20	29.25	19932	470.23	N/A	N/A	6.252	N/A	N/A	Paraweb 2D..

RESULTS for PULLOUT

Live Load included in calculating Tmax

NOTE: Live load is not included in calculating the overburden pressure used to assess pullout resistance.

#	Geogrid Elevation [ft]	Coverage Ratio	Tmax [lb/ft]	Tmd [lb/ft]	Le [ft] (see NOTE)	La [ft]	Avail.Static Pullout, Pr [lb/ft]	Specified Static CDR	Actual Static CDR	Avail.Seism. Pullout, Pr [lb/ft]	Specified Seismic CDR	Actual Seismic CDR
1	0.75	0.147	2523.5	N/A	21.60	0.40	10106.8	N/A	4.005	N/A	N/A	N/A
2	2.25	0.147	2407.5	N/A	20.80	1.20	9252.2	N/A	3.843	N/A	N/A	N/A
3	3.75	0.147	2291.6	N/A	20.01	1.99	8434.6	N/A	3.681	N/A	N/A	N/A
4	5.25	0.147	2175.7	N/A	19.21	2.79	7649.9	N/A	3.516	N/A	N/A	N/A
5	6.75	0.147	2059.7	N/A	18.41	3.59	6906.3	N/A	3.353	N/A	N/A	N/A
6	8.25	0.147	1943.8	N/A	17.61	4.39	6199.4	N/A	3.189	N/A	N/A	N/A
7	9.75	0.147	1827.9	N/A	16.82	5.18	5526.3	N/A	3.023	N/A	N/A	N/A
8	11.25	0.147	1712.0	N/A	16.02	5.98	4893.5	N/A	2.858	N/A	N/A	N/A
9	12.75	0.147	1596.0	N/A	15.22	6.78	4297.5	N/A	2.693	N/A	N/A	N/A
10	14.25	0.147	1480.1	N/A	14.42	7.58	3735.9	N/A	2.524	N/A	N/A	N/A
11	15.75	0.147	1364.2	N/A	13.63	8.37	3213.9	N/A	2.356	N/A	N/A	N/A
12	17.25	0.147	1248.2	N/A	12.83	9.17	2728.8	N/A	2.186	N/A	N/A	N/A
13	18.75	0.147	1132.3	N/A	12.03	9.97	2278.7	N/A	2.012	N/A	N/A	N/A
14	20.25	0.147	1016.4	N/A	11.23	10.77	1867.5	N/A	1.837	N/A	N/A	N/A
15	21.75	0.147	900.4	N/A	10.44	11.56	1493.3	N/A	1.658	N/A	N/A	N/A
16	23.25	0.147	784.5	N/A	9.64	12.36	1154.7	N/A	1.472	N/A	N/A	N/A
17	24.75	0.147	668.6	N/A	8.84	13.16	1068.0	N/A	1.597	N/A	N/A	N/A
18	26.25	0.147	552.6	N/A	10.04	13.96	922.0	N/A	1.668	N/A	N/A	N/A
19	27.75	0.147	436.7	N/A	12.25	14.75	769.7	N/A	1.762	N/A	N/A	N/A
20	29.25	0.147	470.2	N/A	14.45	15.55	488.9	N/A	1.040	N/A	N/A	N/A

Copyright © 1998-2019 ADAMA Engineering, Inc.
License number MSEW-301330

RESULTS for CONNECTION (static conditions)

Live Load included in calculating Tmax

#	Geogrid Elevation [ft]	Connection force, To [lb/ft]	Reduction factor for connection (short-term strength) CRult	Reduction factor for connection (long-term strength) CRcr	Available connection strength [lb/ft]	Available Geogrid strength, Tavailable [lb/ft]	CDR connection strength Specified	CDR connection strength Actual	CDR Geogrid strength Specified	CDR Geogrid strength Actual	Product name
1	0.75	2523	0.63	0.63	21603	22147	N/A	1.26	N/A	1.17	Paraweb 2D..
2	2.25	2408	0.63	0.63	21603	22147	N/A	1.32	N/A	1.22	Paraweb 2D..
3	3.75	2292	0.63	0.63	21603	22147	N/A	1.39	N/A	1.28	Paraweb 2D..
4	5.25	2176	0.63	0.63	21603	22147	N/A	1.46	N/A	1.35	Paraweb 2D..
5	6.75	2060	0.63	0.63	21603	22147	N/A	1.55	N/A	1.43	Paraweb 2D..
6	8.25	1944	0.63	0.63	21603	22147	N/A	1.64	N/A	1.51	Paraweb 2D..
7	9.75	1828	0.63	0.63	21603	22147	N/A	1.74	N/A	1.61	Paraweb 2D..
8	11.25	1712	0.63	0.63	21603	22147	N/A	1.86	N/A	1.72	Paraweb 2D..
9	12.75	1596	0.63	0.63	21603	22147	N/A	2.00	N/A	1.84	Paraweb 2D..
10	14.25	1480	0.63	0.63	21603	22147	N/A	2.15	N/A	1.99	Paraweb 2D..
11	15.75	1364	0.63	0.63	21603	22147	N/A	2.34	N/A	2.16	Paraweb 2D..
12	17.25	1248	0.63	0.63	21603	22147	N/A	2.55	N/A	2.36	Paraweb 2D..
13	18.75	1132	0.63	0.63	21603	22147	N/A	2.81	N/A	2.60	Paraweb 2D..
14	20.25	1016	0.63	0.63	21603	22147	N/A	3.14	N/A	2.89	Paraweb 2D..
15	21.75	900	0.63	0.63	21603	22147	N/A	3.54	N/A	3.27	Paraweb 2D..
16	23.25	785	0.63	0.63	21603	22147	N/A	4.06	N/A	3.75	Paraweb 2D..
17	24.75	669	0.63	0.63	21603	22147	N/A	4.77	N/A	4.40	Paraweb 2D..
18	26.25	553	0.63	0.63	21603	22147	N/A	5.77	N/A	5.32	Paraweb 2D..
19	27.75	437	0.63	0.63	21603	22147	N/A	7.30	N/A	6.73	Paraweb 2D..
20	29.25	470	0.63	0.63	21603	22147	N/A	6.78	N/A	6.25	Paraweb 2D..

Copyright © 1998-2019 ADAMA Engineering, Inc.
License number MSEW-301330

2.2.2 MSE DESIGN PROBLEM 2 (C1 CHECKLIST)

MSEW Output

© Stone Strong Systems

AASHTO 2007-2010 (LRFD)
Stone Strong - IDEA Submittal

MSEW(3.0): Update # 14.981

PROJECT IDENTIFICATION

Title: Stone Strong - IDEA Submittal
Project Number: 20004 00
Client: Stone Strong Systems
Designer: BJP
Station Number: 134

Description:

Problem 2. 2H:1V backslope. 30 ft Height Wall with 4 connections per unit. Installation strap legnths shall be 3 ft less than calculated.

Company's information:

Name: Thiele Geotech
Street: 13478 Chandler Road

Omaha, NE 68138
Telephone #: (402) 556-2171
Fax #: (402) 556-7831
E-Mail:

Original file path and name: P:\20004.00\Agency Approvals\Geo-Institute\IDEA\MSEW\Pr..... .....- Revised 1-6-21.BEN

Original date and time of creating this file: Thu Mar 31 08:22:52 2016

PROGRAM MODE: ANALYSIS
of a SIMPLE STRUCTURE
using GEOGRID as reinforcing material.

Copyright © 1998-2019 ADAMA Engineering, Inc.
License number MSEW-301330

SOIL DATA

REINFORCED SOIL

Unit weight,	γ	135.0 lb/ft ^{3}
Design value of internal angle of friction,	ϕ	34.0 °

RETAINED SOIL

Unit weight,	γ	120.0 lb/ft ^{3}
Design value of internal angle of friction,	ϕ	30.0 °

FOUNDATION SOIL (Considered as an equivalent uniform soil)

Equivalent unit weight,	$\gamma_{equiv.}$	120.0 lb/ft ^{3}
Equivalent internal angle of friction,	$\phi_{equiv.}$	30.0 °
Equivalent cohesion,	$c_{equiv.}$	0.0 lb/ft ^{2}

Water table does not affect bearing capacity

LATERAL EARTH PRESSURE COEFFICIENTS

Ka (internal stability) = 0.2827 (if batter is less than 10°, Ka is calculated from eq. 15. Otherwise, eq. 38 is utilized)
Inclination of internal slip plane, ψ = 62.00° (see Fig. 28 in DEMO 82).
Ka (external stability) = 0.5378 (if batter is less than 10°, Ka is calculated from eq. 16. Otherwise, eq. 17 is utilized)

BEARING CAPACITY

Bearing capacity coefficients (calculated by MSEW): Nc = 30.14 N γ = 22.40

SEISMICITY

Not Applicable

Copyright © 1998-2019 ADAMA Engineering, Inc.
License number MSEW-301330

INPUT DATA: Geogrids (Analysis)

D A T A	Geogrid type #1	Geogrid type #2	Geogrid type #3	Geogrid type #4	Geogrid type #5
Tult [lb/ft]	38101.0	38101.0			
Durability reduction factor, RFd	1.15	1.15			
Installation-damage reduction factor, RFid	1.10	1.10			
Creep reduction factor, RFc	1.36	1.36	N/A	N/A	N/A
CDR for strength	N/A	N/A			
Coverage ratio, Rc	0.147	0.147			
Friction angle along geogrid-soil interface, ρ	25.27	25.27			
Pullout resistance factor, F*	$1.00 \cdot \tan\phi$	$0.80 \cdot \tan\phi$	N/A	N/A	N/A
Scale-effect correction factor, α	0.8	0.8			

Variation of Lateral Earth Pressure Coefficient With Depth

Z	K / Ka
0 ft	1.00
3.3 ft	1.00
6.6 ft	1.00
9.8 ft	1.00
13.1 ft	1.00
16.4 ft	1.00
19.7 ft	1.00

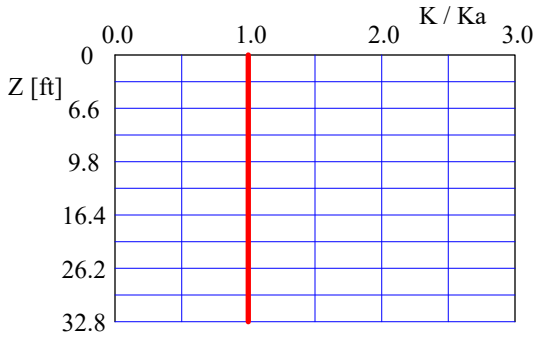

Copyright © 1998-2019 ADAMA Engineering, Inc.
License number MSEW-301330

Item 5.

INPUT DATA: Facia and Connection (according to revised Demo 82) (Analysis)

FACIA type: Facing enabling frictional connection of reinforcement (e.g., modular concrete blocks, gabions)
Depth/height of block is 3.67/3.00 ft. Horizontal distance to Center of Gravity of block is 1.90 ft.
Average unit weight of block is γ_f = 122.20 lb/ft ³

Z / Hd	To-static / Tmax
0.00	1.00
0.25	1.00
0.50	1.00
0.75	1.00
1.00	1.00

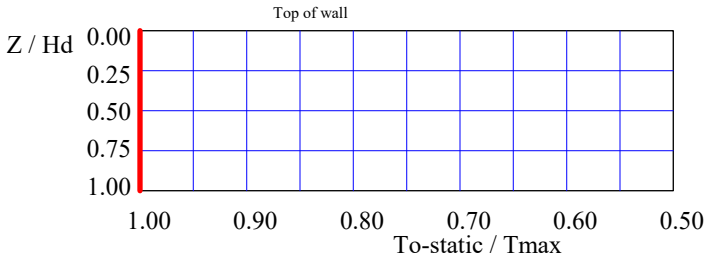

Geogrid Type #1		Geogrid Type #2		Geogrid Type #3		Geogrid Type #4		Geogrid Type #5	
σ (1)	CRult (2)	σ	CRult	σ	CRult	σ	CRult	σ	CRult
0.0	0.63	0.0	0.63						
10000.0	0.63	10000.0	0.63	N/A		N/A		N/A	

Geogrid Type #1[3]		Geogrid Type #2		Geogrid Type #3		Geogrid Type #4		Geogrid Type #5	
σ	CRcr	σ	CRcr	σ	CRcr	σ	CRcr	σ	CRcr
0.0	0.63	0.0	0.63						
10000.0	0.63	10000.0	0.63	N/A		N/A		N/A	

(1) σ = Confining stress in between stacked blocks [lb/ft ²]
(2) CRult = Tc-ult / Tult
(3) CRcr = Tcre / Tult

D A T A (for connection only)	Type #1	Type #2	Type #3	Type #4	Type #5
Product Name	Paraweb 2..	Paraweb 2..	N/A	N/A	N/A
Connection strength reduction factor, RFd	1.00	1.00	N/A	N/A	N/A
Creep reduction factor, RFc	N/A	N/A	N/A	N/A	N/A

Copyright © 1998-2019 ADAMA Engineering, Inc.
License number MSEW-301330

INPUT DATA: Geometry and Surcharge loads (of a SIMPLE STRUCTURE)

Design height, Hd	30.00	[ft]	{ Embedded depth is E = 1.00 ft, and height above top of finished bottom grade is H = 29.00 ft }
Batter, ω	0.0	[deg]	
Backslope, β	26.6	[deg]	
Backslope rise	1000.0	[ft]	Broken back equivalent angle, I = 26.60° (see Fig. 25 in DEMO 82)

U N I F O R M S U R C H A R G E
Uniformly distributed dead load is 0.0 [lb/ft ²]

ANALYZED REINFORCEMENT LAYOUT:

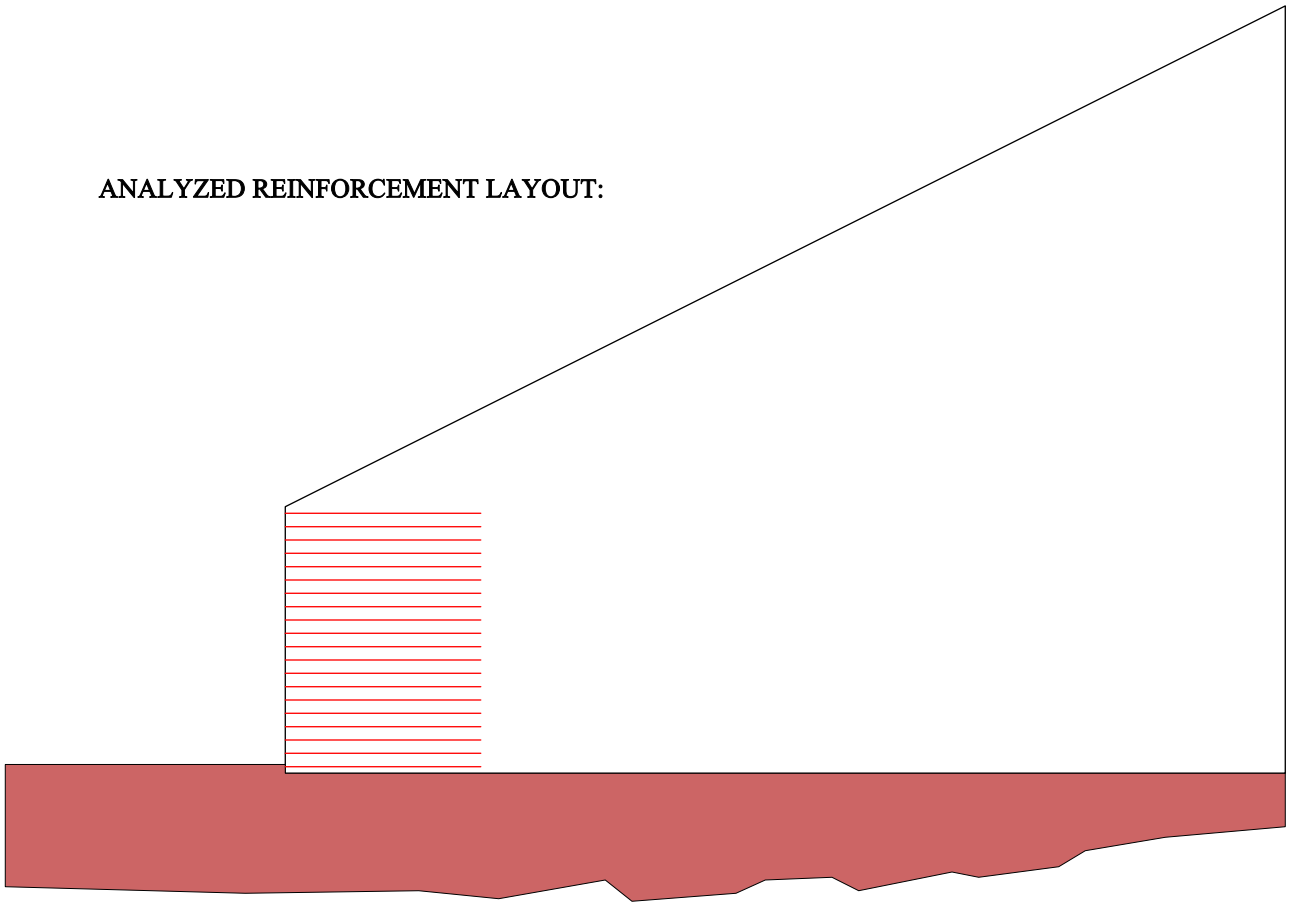

SCALE:

0 2 4 6 8 10[ft]

Copyright © 1998-2019 ADAMA Engineering, Inc.
License number MSEW-301330

AASHTO 2007-2010 (LRFD) Input Data

INTERNAL STABILITY

Load factor for vertical earth pressure, EV, from Table 3.4.1-2:	$\gamma_{p\text{-}EV}$	1.35
Load factor for earthquake loads, EQ, from Table 3.4.1-1:	$\gamma_{p\text{-}EQ}$	1.00
Load factor for live load surchrge, LS, from Figure C11.5.5-3(b): (Same as in External Stability).	$\gamma_{p\text{-}LS}$	1.75
Load factor for dead load surchrge, ES: (Same as in External Stability).	$\gamma_{p\text{-}ES}$	1.50

Resistance factor for reinforcement tension from Table 11.5.6-1:	ϕ	Static	Combined static/seismic
Geogrid:		0.90	1.20

Resistance factor for reinforcement tension in connectors from Table 11.5.6-1:	ϕ	Static	Combined static/seismic
Geogrid:		0.90	1.20

Resistance factor for reinforcement pullout from Table 11.5.6-1:	ϕ	0.90	1.20

EXTERNAL STABILITY

Load factor for vertical earth pressure, EV, from Table 3.4.1-2 and Figure C11.5.5-2:		Static	Combined Static/Seismic	
Sliding and Eccentricity	$\gamma_{p\text{-}EV}$	1.00	$\gamma_{p\text{-}EQ}$	1.00
Bearing Capacity	$\gamma_{p\text{-}EV}$	1.35	$\gamma_{p\text{-}EQ}$	1.35

Load factor of active lateral earth pressure, EH, from Table 3.4.1-2 and Figure C11.5.5-2:	$\gamma_{p\text{-}EH}$	1.50
Load factor of active lateral earth pressure during earthquake (does not multiply P_{AE} and P_{IR}):	$(\gamma_{p\text{-}EH})_{EQ}$	1.50
Load factor for earthquake loads, EQ, from Table 3.4.1-1 (multiplies P_{AE} and P_{IR}):	$\gamma_{p\text{-}EQ}$	1.00

Resistance factor for shear resistance along common interfaces from Table 11.5.6-1:		Static	Combined Static/Seismic
Reinforced Soil and Foundation	ϕ_τ	1.00	1.00
Reinforced Soil and Reinforcement	ϕ_τ	1.00	1.00

Resistance factor for bearing capacity of shallow foundation from Table 11.5.6-1:	Static	Combined Static/Seismic
ϕ_b	0.65	0.65

Copyright © 1998-2019 ADAMA Engineering, Inc.
License number MSEW-301330

ANALYSIS: CALCULATED FACTORS (Static conditions)

Bearing capacity, CDR = 1.29, factored bearing load = 11000 lb/ft².
Foundation Interface: Direct sliding, CDR = 1.125, Eccentricity, e/L = 0.1712, CDR-overturning = 2.03

GEOGRID				CONNECTION						
#	Elevation [ft]	Length [ft]	Type #	CDR [connection strength]	CDR [geogrid strength]	Geogrid strength CDR	Pullout resistance CDR	Direct sliding CDR	Eccentricity e/L	Product name
1	0.75	22.00	2	1.19	1.10	1.102	4.368	1.271	0.1627	Paraweb 2D..
2	2.25	22.00	2	1.25	1.15	1.152	4.234	1.302	0.1461	Paraweb 2D..
3	3.75	22.00	2	1.31	1.21	1.207	4.098	1.334	0.1299	Paraweb 2D..
4	5.25	22.00	2	1.37	1.27	1.268	3.965	1.369	0.1141	Paraweb 2D..
5	6.75	22.00	2	1.45	1.33	1.334	3.832	1.406	0.0986	Paraweb 2D..
6	8.25	22.00	2	1.53	1.41	1.408	3.701	1.446	0.0836	Paraweb 2D..
7	9.75	22.00	2	1.62	1.49	1.491	3.569	1.488	0.0688	Paraweb 2D..
8	11.25	22.00	2	1.72	1.58	1.584	3.439	1.534	0.0544	Paraweb 2D..
9	12.75	22.00	2	1.83	1.69	1.690	3.310	1.583	0.0403	Paraweb 2D..
10	14.25	22.00	2	1.96	1.81	1.811	3.182	1.635	0.0265	Paraweb 2D..
11	15.75	22.00	2	2.11	1.95	1.950	3.055	1.692	0.0129	Paraweb 2D..
12	17.25	22.00	2	2.29	2.11	2.112	2.931	1.753	-0.0007	Paraweb 2D..
13	18.75	22.00	2	2.50	2.30	2.304	2.809	1.818	-0.0142	Paraweb 2D..
14	20.25	22.00	2	2.75	2.53	2.535	2.690	1.888	-0.0279	Paraweb 2D..
15	21.75	22.00	2	3.05	2.82	2.816	2.575	1.962	-0.0421	Paraweb 2D..
16	23.25	22.00	1	3.43	3.17	3.168	3.084	2.041	-0.0571	Paraweb 2D..
17	24.75	22.00	1	3.92	3.62	3.620	2.955	2.121	-0.0735	Paraweb 2D..
18	26.25	22.00	1	4.58	4.22	4.223	2.846	2.201	-0.0924	Paraweb 2D..
19	27.75	22.00	1	5.49	5.07	5.067	2.762	2.273	-0.1155	Paraweb 2D..
20	29.25	22.00	1	6.86	6.33	6.331	2.723	2.322	-0.1463	Paraweb 2D..

Copyright © 1998-2019 ADAMA Engineering, Inc.
License number MSEW-301330

BEARING CAPACITY for GIVEN LAYOUT

	STATIC	SEISMIC	UNITS
(Water table does not affect bearing capacity)			
Factored bearing resistance. q-n	14204	N/A	[lb/ft ²]
Factored bearing load, σ_V	10999.8	N/A	[lb/ft ²]
Eccentricity, e	2.87	N/A	[ft]
Eccentricity, e/L	0.131	N/A	
CDR calculated	1.29	N/A	
Base length	22.00	N/A	[ft]

Unfactored applied bearing pressure = (Unfactored R) / [L - 2 * (Unfactored e)] =
Unfactored R = 129767.62 [lb/ft], L = 22.00, Unfactored e = 2.59 [ft], and Sigma = 7716.51 [lb/ft ²]

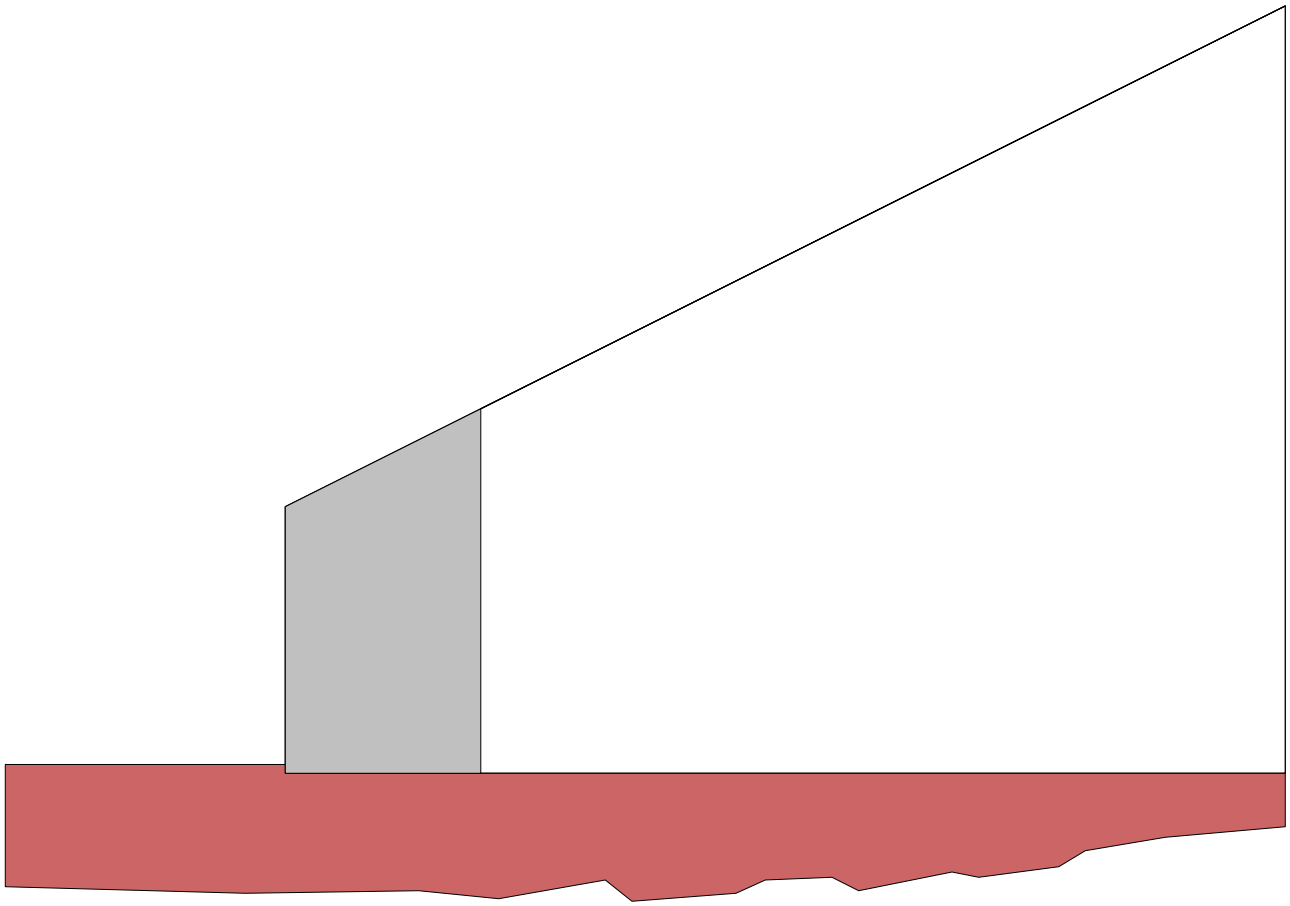

SCALE:

0 2 4 6 8 10[ft]

Copyright © 1998-2019 ADAMA Engineering, Inc.
License number MSEW-301330

DIRECT SLIDING for GIVEN LAYOUT (for GEOGRID reinforcements)

Along reinforced and foundation soils interface: CDR-static = 1.125

#	Geogrid Elevation [ft]	Geogrid Length [ft]	CDR Static	CDR Seismic	Geogrid Type #	Product name
1	0.75	22.00	1.271	N/A	2	Paraweb 2D50 - 7+ ft
2	2.25	22.00	1.302	N/A	2	Paraweb 2D50 - 7+ ft
3	3.75	22.00	1.334	N/A	2	Paraweb 2D50 - 7+ ft
4	5.25	22.00	1.369	N/A	2	Paraweb 2D50 - 7+ ft
5	6.75	22.00	1.406	N/A	2	Paraweb 2D50 - 7+ ft
6	8.25	22.00	1.446	N/A	2	Paraweb 2D50 - 7+ ft
7	9.75	22.00	1.488	N/A	2	Paraweb 2D50 - 7+ ft
8	11.25	22.00	1.534	N/A	2	Paraweb 2D50 - 7+ ft
9	12.75	22.00	1.583	N/A	2	Paraweb 2D50 - 7+ ft
10	14.25	22.00	1.635	N/A	2	Paraweb 2D50 - 7+ ft
11	15.75	22.00	1.692	N/A	2	Paraweb 2D50 - 7+ ft
12	17.25	22.00	1.753	N/A	2	Paraweb 2D50 - 7+ ft
13	18.75	22.00	1.818	N/A	2	Paraweb 2D50 - 7+ ft
14	20.25	22.00	1.888	N/A	2	Paraweb 2D50 - 7+ ft
15	21.75	22.00	1.962	N/A	2	Paraweb 2D50 - 7+ ft
16	23.25	22.00	2.041	N/A	1	Paraweb 2D50 - 0-7..
17	24.75	22.00	2.121	N/A	1	Paraweb 2D50 - 0-7..
18	26.25	22.00	2.201	N/A	1	Paraweb 2D50 - 0-7..
19	27.75	22.00	2.273	N/A	1	Paraweb 2D50 - 0-7..
20	29.25	22.00	2.322	N/A	1	Paraweb 2D50 - 0-7..

ECCENTRICITY for GIVEN LAYOUT

At interface with foundation: e/L static = 0.1712; Overturning: CDR-static = 2.03

#	Geogrid Elevation [ft]	Geogrid Length [ft]	e / L Static	e / L Seismic	Geogrid Type #	Product name
1	0.75	22.00	0.1627	N/A	2	Paraweb 2D50 - 7+ ft
2	2.25	22.00	0.1461	N/A	2	Paraweb 2D50 - 7+ ft
3	3.75	22.00	0.1299	N/A	2	Paraweb 2D50 - 7+ ft
4	5.25	22.00	0.1141	N/A	2	Paraweb 2D50 - 7+ ft
5	6.75	22.00	0.0986	N/A	2	Paraweb 2D50 - 7+ ft
6	8.25	22.00	0.0836	N/A	2	Paraweb 2D50 - 7+ ft
7	9.75	22.00	0.0688	N/A	2	Paraweb 2D50 - 7+ ft
8	11.25	22.00	0.0544	N/A	2	Paraweb 2D50 - 7+ ft
9	12.75	22.00	0.0403	N/A	2	Paraweb 2D50 - 7+ ft
10	14.25	22.00	0.0265	N/A	2	Paraweb 2D50 - 7+ ft
11	15.75	22.00	0.0129	N/A	2	Paraweb 2D50 - 7+ ft
12	17.25	22.00	-0.0007	N/A	2	Paraweb 2D50 - 7+ ft
13	18.75	22.00	-0.0142	N/A	2	Paraweb 2D50 - 7+ ft
14	20.25	22.00	-0.0279	N/A	2	Paraweb 2D50 - 7+ ft
15	21.75	22.00	-0.0421	N/A	2	Paraweb 2D50 - 7+ ft
16	23.25	22.00	-0.0571	N/A	1	Paraweb 2D50 - 0-7..
17	24.75	22.00	-0.0735	N/A	1	Paraweb 2D50 - 0-7..
18	26.25	22.00	-0.0924	N/A	1	Paraweb 2D50 - 0-7..
19	27.75	22.00	-0.1155	N/A	1	Paraweb 2D50 - 0-7..
20	29.25	22.00	-0.1463	N/A	1	Paraweb 2D50 - 0-7..

Copyright © 1998-2019 ADAMA Engineering, Inc.
License number MSEW-301330

RESULTS for STRENGTH

Live Load included in calculating Tmax

#	Geogrid Elevation [ft]	Tavailable [lb/ft]	Tmax [lb/ft]	Tmd [lb/ft]	Specified minimum CDR static	Actual calculated CDR static	Specified minimum CDR seismic	Actual calculated CDR seismic	Product name
1	0.75	19932	2667.03	N/A	N/A	1.102	N/A	N/A	Paraweb 2D..
2	2.25	19932	2551.10	N/A	N/A	1.152	N/A	N/A	Paraweb 2D..
3	3.75	19932	2435.16	N/A	N/A	1.207	N/A	N/A	Paraweb 2D..
4	5.25	19932	2319.23	N/A	N/A	1.268	N/A	N/A	Paraweb 2D..
5	6.75	19932	2203.30	N/A	N/A	1.334	N/A	N/A	Paraweb 2D..
6	8.25	19932	2087.37	N/A	N/A	1.408	N/A	N/A	Paraweb 2D..
7	9.75	19932	1971.44	N/A	N/A	1.491	N/A	N/A	Paraweb 2D..
8	11.25	19932	1855.51	N/A	N/A	1.584	N/A	N/A	Paraweb 2D..
9	12.75	19932	1739.58	N/A	N/A	1.690	N/A	N/A	Paraweb 2D..
10	14.25	19932	1623.65	N/A	N/A	1.811	N/A	N/A	Paraweb 2D..
11	15.75	19932	1507.72	N/A	N/A	1.950	N/A	N/A	Paraweb 2D..
12	17.25	19932	1391.79	N/A	N/A	2.112	N/A	N/A	Paraweb 2D..
13	18.75	19932	1275.86	N/A	N/A	2.304	N/A	N/A	Paraweb 2D..
14	20.25	19932	1159.93	N/A	N/A	2.535	N/A	N/A	Paraweb 2D..
15	21.75	19932	1044.00	N/A	N/A	2.816	N/A	N/A	Paraweb 2D..
16	23.25	19932	928.06	N/A	N/A	3.168	N/A	N/A	Paraweb 2D..
17	24.75	19932	812.13	N/A	N/A	3.620	N/A	N/A	Paraweb 2D..
18	26.25	19932	696.20	N/A	N/A	4.223	N/A	N/A	Paraweb 2D..
19	27.75	19932	580.27	N/A	N/A	5.067	N/A	N/A	Paraweb 2D..
20	29.25	19932	464.34	N/A	N/A	6.331	N/A	N/A	Paraweb 2D..

RESULTS for PULLOUT

Live Load included in calculating Tmax

#	Geogrid Elevation [ft]	Coverage Ratio	Tmax [lb/ft]	Tmd [lb/ft]	Le [ft]	La [ft]	Avail.Static Pullout, Pr [lb/ft]	Specified Static CDR	Actual Static CDR	Avail.Seism. Pullout, Pr [lb/ft]	Specified Seismic CDR	Actual Seismic CDR
1	0.75	0.147	2667.0	N/A	21.60	0.40	11649.9	N/A	4.368	N/A	N/A	N/A
2	2.25	0.147	2551.1	N/A	20.80	1.20	10801.6	N/A	4.234	N/A	N/A	N/A
3	3.75	0.147	2435.2	N/A	20.01	1.99	9980.0	N/A	4.098	N/A	N/A	N/A
4	5.25	0.147	2319.2	N/A	19.21	2.79	9196.0	N/A	3.965	N/A	N/A	N/A
5	6.75	0.147	2203.3	N/A	18.41	3.59	8444.1	N/A	3.832	N/A	N/A	N/A
6	8.25	0.147	2087.4	N/A	17.61	4.39	7724.3	N/A	3.701	N/A	N/A	N/A
7	9.75	0.147	1971.4	N/A	16.82	5.18	7036.6	N/A	3.569	N/A	N/A	N/A
8	11.25	0.147	1855.5	N/A	16.02	5.98	6380.9	N/A	3.439	N/A	N/A	N/A
9	12.75	0.147	1739.6	N/A	15.22	6.78	5757.2	N/A	3.310	N/A	N/A	N/A
10	14.25	0.147	1623.6	N/A	14.42	7.58	5165.7	N/A	3.182	N/A	N/A	N/A
11	15.75	0.147	1507.7	N/A	13.63	8.37	4606.2	N/A	3.055	N/A	N/A	N/A
12	17.25	0.147	1391.8	N/A	12.83	9.17	4078.7	N/A	2.931	N/A	N/A	N/A
13	18.75	0.147	1275.9	N/A	12.03	9.97	3583.3	N/A	2.809	N/A	N/A	N/A
14	20.25	0.147	1159.9	N/A	11.23	10.77	3120.0	N/A	2.690	N/A	N/A	N/A
15	21.75	0.147	1044.0	N/A	10.44	11.56	2688.7	N/A	2.575	N/A	N/A	N/A
16	23.25	0.147	928.1	N/A	9.64	12.36	2861.9	N/A	3.084	N/A	N/A	N/A
17	24.75	0.147	812.1	N/A	8.84	13.16	2400.0	N/A	2.955	N/A	N/A	N/A
18	26.25	0.147	696.2	N/A	8.04	13.96	1981.4	N/A	2.846	N/A	N/A	N/A
19	27.75	0.147	580.3	N/A	7.25	14.75	1602.9	N/A	2.762	N/A	N/A	N/A
20	29.25	0.147	464.3	N/A	6.45	15.55	1264.4	N/A	2.723	N/A	N/A	N/A

Copyright © 1998-2019 ADAMA Engineering, Inc.
License number MSEW-301330

RESULTS for CONNECTION (static conditions)

Live Load included in calculating Tmax

#	Geogrid Elevation [ft]	Connection force, To [lb/ft]	Reduction factor for connection (short-term strength) CRult	Reduction factor for connection (long-term strength) CRcr	Available connection strength [lb/ft]	Available Geogrid strength, Tavailable [lb/ft]	CDR connection strength Specified	CDR connection strength Actual	CDR Geogrid strength Specified	CDR Geogrid strength Actual	Product name
1	0.75	2667	0.63	0.63	21603	22147	N/A	1.19	N/A	1.10	Paraweb 2D..
2	2.25	2551	0.63	0.63	21603	22147	N/A	1.25	N/A	1.15	Paraweb 2D..
3	3.75	2435	0.63	0.63	21603	22147	N/A	1.31	N/A	1.21	Paraweb 2D..
4	5.25	2319	0.63	0.63	21603	22147	N/A	1.37	N/A	1.27	Paraweb 2D..
5	6.75	2203	0.63	0.63	21603	22147	N/A	1.45	N/A	1.33	Paraweb 2D..
6	8.25	2087	0.63	0.63	21603	22147	N/A	1.53	N/A	1.41	Paraweb 2D..
7	9.75	1971	0.63	0.63	21603	22147	N/A	1.62	N/A	1.49	Paraweb 2D..
8	11.25	1856	0.63	0.63	21603	22147	N/A	1.72	N/A	1.58	Paraweb 2D..
9	12.75	1740	0.63	0.63	21603	22147	N/A	1.83	N/A	1.69	Paraweb 2D..
10	14.25	1624	0.63	0.63	21603	22147	N/A	1.96	N/A	1.81	Paraweb 2D..
11	15.75	1508	0.63	0.63	21603	22147	N/A	2.11	N/A	1.95	Paraweb 2D..
12	17.25	1392	0.63	0.63	21603	22147	N/A	2.29	N/A	2.11	Paraweb 2D..
13	18.75	1276	0.63	0.63	21603	22147	N/A	2.50	N/A	2.30	Paraweb 2D..
14	20.25	1160	0.63	0.63	21603	22147	N/A	2.75	N/A	2.53	Paraweb 2D..
15	21.75	1044	0.63	0.63	21603	22147	N/A	3.05	N/A	2.82	Paraweb 2D..
16	23.25	928	0.63	0.63	21603	22147	N/A	3.43	N/A	3.17	Paraweb 2D..
17	24.75	812	0.63	0.63	21603	22147	N/A	3.92	N/A	3.62	Paraweb 2D..
18	26.25	696	0.63	0.63	21603	22147	N/A	4.58	N/A	4.22	Paraweb 2D..
19	27.75	580	0.63	0.63	21603	22147	N/A	5.49	N/A	5.07	Paraweb 2D..
20	29.25	464	0.63	0.63	21603	22147	N/A	6.86	N/A	6.33	Paraweb 2D..

Copyright © 1998-2019 ADAMA Engineering, Inc.
License number MSEW-301330

2.2.3 GRAVITY DESIGN PROBLEM 1 (C7 CHECKLIST)

Gravity Wall Analysis, Spreadsheet Output:
External Analysis – 12 feet height plus coping/moment slab
Internal Analysis – top 9 feet
Internal Analysis – top 6 feet
Internal Analysis – top 3 feet

© Stone Strong Systems

STONE STRONG GRAVITY CALCULATIONS - ver 6.1

Project Name: IDEA Submittal
Location:
Job#: 20004.00
Section: Problem 1 (checklist C7, Gravity Wall)
Calc by: D Thiele

(AASHTO 8th Edition, 2017)

3/24/20 11:31

Notes assumed properties for foundation soil
Barrier load (500 plf, CT in Extereme Load Case 2) applied at base of moment slab

Wall Configuration

			setback (in)		modular units		unit fill		soil wedge		CIP Extension		
unit	w (in)	h (ft)	face	tail	Wb (lb)	xb (in)	Wa (lb)	xa (in)	Ws (lb)	xs (in)	we (in)	h_t	Internal
12" cp	50.0	1.00	0.0	-35.0	604	25.0	0	25.0	16	51.2			Internal Stability OK!
V24	43.0	3.00	0.0	-42.0	750	20.2	594	23.8	433	51.2			Internal Stability OK!
V24	43.0	3.00	0.0	-42.0	750	20.2	594	23.8	722	56.3			Internal Stability OK!
V24-62	61.0	3.00	0.0	-24.0	850	28.1	1,046	32.0	516	70.6			Internal Stability OK!
V24-86	85.0	3.00	0.0	0.0	950	39.0	1,621	44.1	0	0.0			
													External Stability OK!
	85.0	13.00	0.0	-35.0	3,904	27.2	3,855	34.6	1,687	59.3			

backfill height 13.00 feet — ω= 0.00 deg — interface friction angle — lateral load above wall 500 plf
exposed height 12.00 feet — ω'= -12.65 deg — δ 25.5 deg — height above top of wall -1 feet

Retained Soil
γ 135 pcf
ϕ 34 deg

Foundation Soil
γ 125 pcf
ϕ 30 deg
c' psf

base embedment 12 in
base thickness 9 in
base material agg
toe slope H:1V slope

bearing pressure n/a psf (if specified) (net)

Aggregate Unit Fill
γ 110 pcf

composite friction coefficient μ_b 0.69

© STONE STRONG SYSTEMS

STONE STRONG GRAVITY CALCULATIONS - ver 6.1

Project Name:	IDEA Submittal
Location:	
Job#:	20004.00
Section:	Problem 1 (checklist C7, Gravity Wall)
Calc by:	D Thiele

3/24/20 11:31

Seismic Load PGA [ ] G site class (A to E or 1) [D] Fpga 1.60 Fa 1.60 k_h 0.00

Backfill Slope & Surcharge

		rise in grade	LL surcharge	tier height
length 1	30 feet (horizontal)	ft	250 psf	ft
length 2	feet (horizontal)	ft	psf	ft
length 3	feet (horizontal)	ft	psf	ft
length 4	feet (horizontal)	ft	psf	

effective slope H:1V slope β 0.0 deg avg q 250 psf

failure plane α 62.07 deg zone of influence 13.98 ft

Ground Surface & Trial Wedge Plot

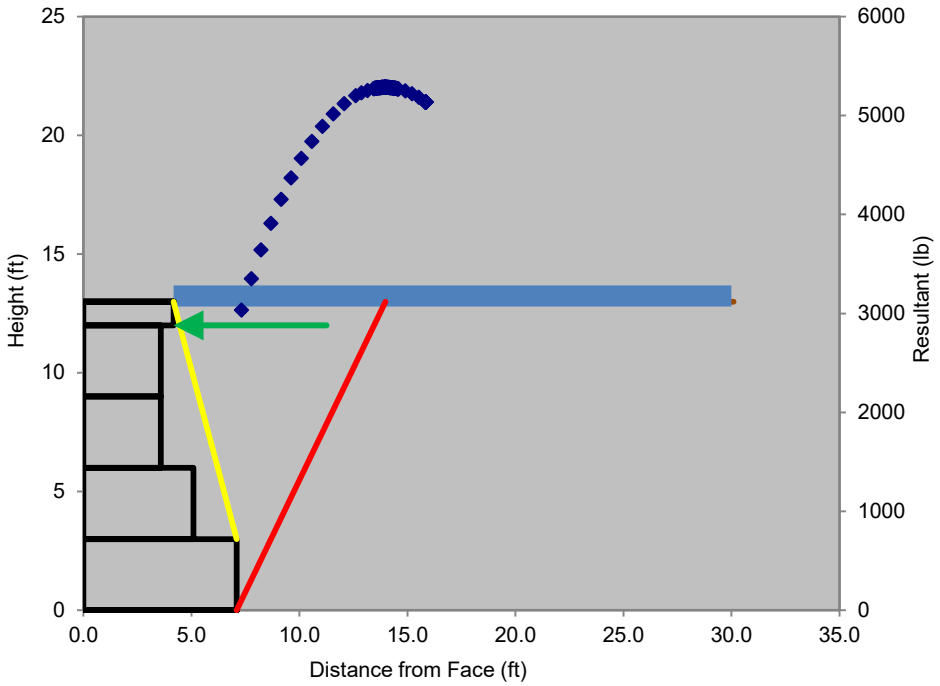

Unfactored Loads

K_a =	0.361	K_{AE} =	0.361
P_h =	3,235 lb	ΔK_{AE} =	0.000
P_v =	2,541 lb	P_{IR} =	0 lb
Q_{lh} =	922 lb	ΔP_{AEh} =	0 lb
Q_{lv} =	724 lb	ΔP_{AEv} =	0 lb

© STONE STRONG SYSTEMS

STONE STRONG SYSTEMS®

STONE STRONG GRAVITY CALCULATIONS - ver 6.1

Project Name: IDEA Submittal
Location:
Job#: 20004.00
Section: Problem 1 (checklist C7, Gravity Wall)
Calc by: D Thiele

3/24/20 11:31

	Load Cases:	Strngth I-a	Strngth I-b	Strngth IV	Extrme I-a (EQ)	Extrme I-b (EQ)	Extrme II (CT)	Service I		
Factored Loading	*Overturning (lb-ft):*	31,511	31,511	21,028	14,018	14,018	23,014	20,009	**OK!**	**Max Utiliization**
	Sliding (lb):	6,465	6,465	4,853	3,235	3,235	4,196	4,157	**OK!**	84%
	Bearing (psf):	3,299	4,067	3,189	2,188	2,188	2,868	2,779	**OK!**	
	e (ft):	1.82	1.58	1.21	1.16	1.16	1.85	1.47	**OK!**	
	Bf' (ft):	4.47	4.91	5.62	5.72	5.72	4.45	5.12		
Factored Resistance	*Overturning (lb-ft):*	53,942	66,284	57,577	39,940	39,940	41,975	46,181		**Min Capacity/Demand Ratio**
	Sliding (lb):	7,689	10,475	9,377	7,304	7,304	7,513	8,323		1.19
	Bearing (psf):	4,631	4,902	5,355	12,039	12,039	10,257	11,196		
	(@ top of base) Max e (ft):	2.36	2.36	2.36	2.83	2.83	2.83	2.36		
Load & Resistance Factors	LL	1.75	1.75	0.00	0.00	0.00	0.50	1.00		
	EH	1.50	1.50	1.50	1.00	1.00	1.00	1.00		
	EQ	0.00	0.00	0.00	1.00	1.00	0.00	0.00		
	CT	0.00	0.00	0.00	0.00	0.00	1.00	0.00		
	LL Surcharge over Wall	0.00	1.75	0.00	0.00	0.00	0.00	1.00		
	DC	0.90	1.25	1.50	1.00	1.00	1.00	1.00		
	EV	1.00	1.35	1.35	1.00	1.00	1.00	1.00		
	BC	0.45	0.45	0.45	1.00	1.00	1.00	1.00		
	ϕt precast to agg	0.90	0.90	0.90	1.00	1.00	1.00	1.00		
	ϕt CIP to agg/soil	0.80	0.80	0.80	1.00	1.00	1.00	1.00		
	ϕt soil to soil	0.90	0.90	0.90	1.00	1.00	1.00	1.00		
	ϕt precast to precast	0.90	0.90	0.90	1.00	1.00	1.00	1.00		
	concrete interface - eccentricity limit	0.45	0.45	0.45	0.40	0.40	0.45	0.45		
	bearing on soil - eccentricity limit	0.33	0.33	0.33	0.40	0.40	0.40	0.33		

© S T O N E S T R O N G S Y S T E M S

STONE STRONG GRAVITY CALCULATIONS - ver 6.1

Project Name: IDEA Submittal
Location:
Job#: 20004.00
Section: Problem 1 (checklist C7, Gravity Wall)
Calc by: D Thiele

(AASHTO 8th Edition, 2017)

3/24/20 11:31

Notes
assumed properties for foundation soil
Barrier load (500 plf, CT in Extereme Load Case 2) applied at base of moment slab

Complete internal analaysis results for top 9 feet

Wall Configuration

			setback (in)		modular units		unit fill		soil wedge		CIP Extension		
unit	w (in)	h (ft)	face	tail	Wb (lb)	xb (in)	Wa (lb)	xa (in)	Ws (lb)	xs (in)	we (in)	h_t	Internal
12" cp	50.0	1.00	0.0	-11.0	604	24.0	0	24.0	7	49.5			Internal Stability OK!
V24	43.0	3.00	0.0	-18.0	750	19.2	594	22.8	301	47.5			Internal Stability OK!
V24	43.0	3.00	0.0	-18.0	750	19.2	594	22.8	430	49.9			Internal Stability OK!
V24-62	61.0	3.00	0.0	0.0	850	27.1	1,046	31.0	0	0.0			
													Internal Stability OK!
	61.0	10.00	0.0	-11.0	2,954	22.5	2,234	26.6	738	48.9			

backfill height **10.00** feet

ω= 0.00 deg
ω'= -5.24 deg

interface friction angle
δ 25.5 deg

lateral load above wall **500** plf
height above top of wall **-1** feet

Retained Soil

γ **135** pcf
ϕ **34** deg

Internal ONLY

Aggregate Unit Fill

γ **110** pcf

© STONE STRONG SYSTEMS

STONE STRONG GRAVITY CALCULATIONS - ver 6.1

Project Name:	IDEA Submittal
Location:	
Job#:	20004.00
Section:	Problem 1 (checklist C7, Gravity Wall)
Calc by:	D Thiele

3/24/20 11:31

Seismic Load PGA [ ] G site class (A to E or 1) [D] Fpga 1.60 Fa 1.60 k_h 0.00

Backfill Slope & Surcharge

		rise in grade	LL surcharge	tier height
length 1	30 feet (horizontal)	ft	250 psf	ft
length 2	feet (horizontal)	ft	psf	ft
length 3	feet (horizontal)	ft	psf	ft
length 4	feet (horizontal)	ft	psf	

effective slope H:1V slope β 0.0 deg avg q 250 psf

failure plane α 59.75 deg zone of influence 10.92 ft

Ground Surface & Trial Wedge Plot

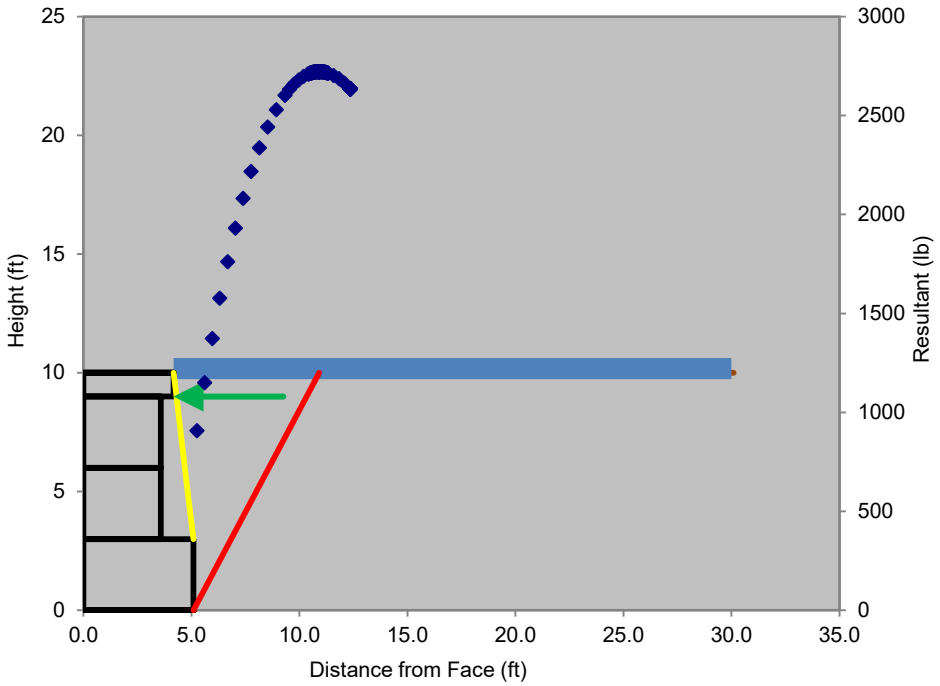

Unfactored Loads

K_a =	0.294	K_{AE} =	0.294
P_h =	1,707 lb	ΔK_{AE} =	0.000
P_v =	1,015 lb	P_{IR} =	0 lb
Q_{lh} =	632 lb	ΔP_{AEh} =	0 lb
Q_{lv} =	376 lb	ΔP_{AEv} =	0 lb

© S T O N E S T R O N G S Y S T E M S

STONE STRONG SYSTEMS®

STONE STRONG GRAVITY CALCULATIONS - ver 6.1

Project Name: IDEA Submittal
Location:
Job#: 20004.00
Section: Problem 1 (checklist C7, Gravity Wall)
Calc by: D Thiele

3/24/20 11:31

	Load Cases:	Strngth I-a	Strngth I-b	Strngth IV	Extrme I-a (EQ)	Extrme I-b (EQ)	Extrme II (CT)	Service I	
Factored Loading	*Overturning (lb-ft):*	14,071	14,071	8,537	5,692	5,692	11,772	8,853	**OK!**
	Sliding (lb):	3,668	3,668	2,561	1,707	1,707	2,524	2,340	**OK!**
	Bearing (psf):								**OK!**
	e (ft):	1.47	1.10	0.81	0.77	0.77	1.62	1.01	**OK!**
	Bf' (ft):								
Factored Resistance	*Overturning (lb-ft):*	21,488	29,299	24,047	16,669	16,669	17,522	20,460	
	Sliding (lb):	5,285	7,759	6,653	5,259	5,259	5,391	6,259	
	Bearing (psf):								
	(@ interface) Max e (ft):	2.25	2.25	2.25	2.00	2.00	2.25	2.25	
Load & Resistance Factors	LL	1.75	1.75	0.00	0.00	0.00	0.50	1.00	
	EH	1.50	1.50	1.50	1.00	1.00	1.00	1.00	
	EQ	0.00	0.00	0.00	1.00	1.00	0.00	0.00	
	CT	0.00	0.00	0.00	0.00	0.00	1.00	0.00	
	LL Surcharge over Wall	0.00	1.75	0.00	0.00	0.00	0.00	1.00	
	DC	0.90	1.25	1.50	1.00	1.00	1.00	1.00	
	EV	1.00	1.35	1.35	1.00	1.00	1.00	1.00	
	BC	0.45	0.45	0.45	1.00	1.00	1.00	1.00	
	ϕt precast to agg	0.90	0.90	0.90	1.00	1.00	1.00	1.00	
	ϕt CIP to agg/soil	0.80	0.80	0.80	1.00	1.00	1.00	1.00	
	ϕt soil to soil	0.90	0.90	0.90	1.00	1.00	1.00	1.00	
	ϕt precast to precast	0.90	0.90	0.90	1.00	1.00	1.00	1.00	
	concrete interface - eccentricity limit	0.45	0.45	0.45	0.40	0.40	0.45	0.45	
	bearing on soil - eccentricity limit	0.33	0.33	0.33	0.40	0.40	0.40	0.33	

Max Utiliization
72%

Min Capacity/Demand Ratio
1.39

© STONE STRONG SYSTEMS

STONE STRONG SYSTEMS®

STONE STRONG GRAVITY CALCULATIONS - ver 6.1

Project Name: IDEA Submittal
Location:
Job#: 20004.00
Section: Problem 1 (checklist C7, Gravity Wall)
Calc by: D Thiele

(AASHTO 8th Edition, 2017)

3/24/20 11:31

Notes
assumed properties for foundation soil
Barrier load (500 plf, CT in Extereme Load Case 2) applied at base of moment slab

Complete internal analaysis results for top 6 feet

Wall Configuration

			setback (in)		modular units		unit fill		soil wedge		CIP Extension		
unit	w (in)	h (ft)	face	tail	Wb (lb)	xb (in)	Wa (lb)	xa (in)	Ws (lb)	xs (in)	we (in)	h_t	Internal
12" cp	50.0	1.00	0.0	7.0	604	24.0	0	24.0	0	0.0			Internal Stability OK!
V24	43.0	3.00	0.0	0.0	750	19.2	594	22.8	0	0.0			Internal Stability OK!
V24	43.0	3.00	0.0	0.0	750	19.2	594	22.8	0	0.0			
													Internal Stability OK!
	43.0	7.00	0.0	7.0	2,104	20.6	1,188	22.8	0	0.0			

backfill height **7.00** feet

ω= 0.00 deg
ω'= 4.76 deg

interface friction angle
δ 25.5 deg

lateral load above wall **500** plf
height above top of wall **-1** feet

Retained Soil

γ **135** pcf
ϕ **34** deg

Internal ONLY

Aggregate Unit Fill

γ **110** pcf

© STONE STRONG SYSTEMS

STONE STRONG GRAVITY CALCULATIONS - ver 6.1

Project Name:	IDEA Submittal
Location:	
Job#:	20004.00
Section:	Problem 1 (checklist C7, Gravity Wall)
Calc by:	D Thiele

3/24/20 11:31

Seismic Load PGA [ ] G site class (A to E or 1) [D] Fpga 1.60 Fa 1.60 k_h 0.00

Backfill Slope & Surcharge

		rise in grade	LL surcharge	tier height
length 1	30 feet (horizontal)	ft	250 psf	ft
length 2	feet (horizontal)	ft	psf	ft
length 3	feet (horizontal)	ft	psf	ft
length 4	feet (horizontal)	ft	psf	

effective slope H:1V slope β 0.0 deg avg q 250 psf

failure plane α 56.24 deg zone of influence 8.26 ft

Ground Surface & Trial Wedge Plot

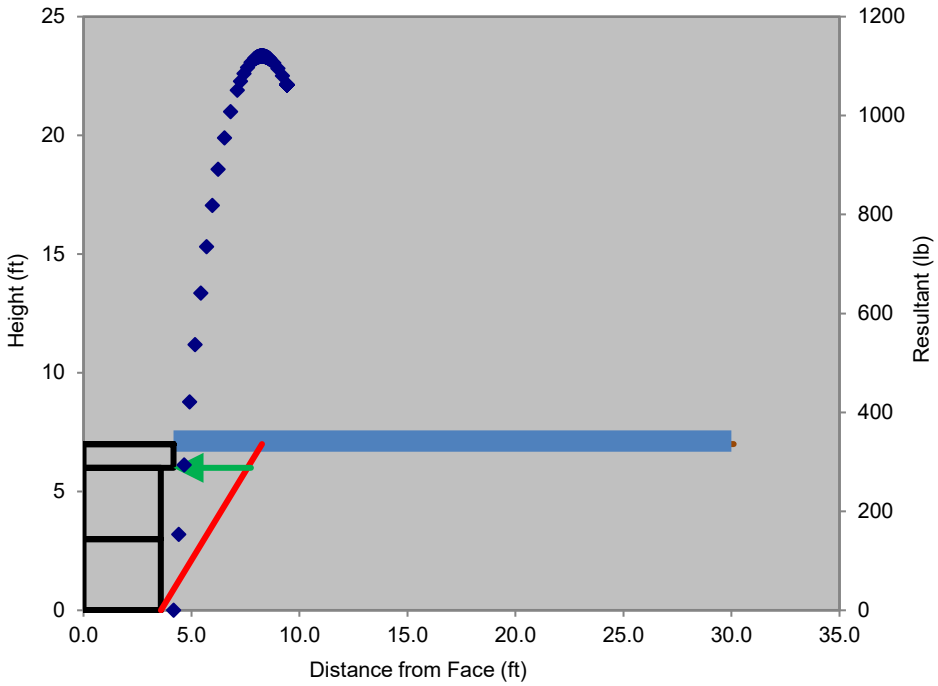

Unfactored Loads

K_a =	0.222	K_{AE} =	0.222
P_h =	685 lb	ΔK_{AE} =	0.000
P_v =	259 lb	P_{IR} =	0 lb
Q_{lh} =	363 lb	ΔP_{AEh} =	0 lb
Q_{lv} =	137 lb	ΔP_{AEv} =	0 lb

© STONE STRONG SYSTEMS

STONE STRONG SYSTEMS®

STONE STRONG GRAVITY CALCULATIONS - ver 6.1

Project Name: IDEA Submittal
Location:
Job#: 20004.00
Section: Problem 1 (checklist C7, Gravity Wall)
Calc by: D Thiele

3/24/20 11:31

	Load Cases:	Strngth I-a	Strngth I-b	Strngth IV	Extrme I-a (EQ)	Extrme I-b (EQ)	Extrme II (CT)	Service I		
Factored Loading	*Overturning (lb-ft):*	4,619	4,619	2,398	1,599	1,599	5,233	2,868	**OK!**	**Max Utiliization**
	Sliding (lb):	1,662	1,662	1,028	685	685	1,367	1,048	**OK!**	85%
	Bearing (psf):								**OK!**	
	e (ft):	0.95	0.44	0.32	0.31	0.31	1.34	0.39	**OK!**	
	Bf' (ft):									
Factored Resistance	*Overturning (lb-ft):*	7,402	12,943	9,289	6,373	6,373	6,633	8,977		**Min Capacity/Demand Ratio**
	Sliding (lb):	2,682	4,571	3,595	2,868	2,868	2,916	3,699		1.18
	Bearing (psf):									
	(@ interface) Max e (ft):	1.58	1.58	1.58	1.40	1.40	1.58	1.58		
Load & Resistance Factors	LL	1.75	1.75	0.00	0.00	0.00	0.50	1.00		
	EH	1.50	1.50	1.50	1.00	1.00	1.00	1.00		
	EQ	0.00	0.00	0.00	1.00	1.00	0.00	0.00		
	CT	0.00	0.00	0.00	0.00	0.00	1.00	0.00		
	LL Surcharge over Wall	0.00	1.75	0.00	0.00	0.00	0.00	1.00		
	DC	0.90	1.25	1.50	1.00	1.00	1.00	1.00		
	EV	1.00	1.35	1.35	1.00	1.00	1.00	1.00		
	BC	0.45	0.45	0.45	1.00	1.00	1.00	1.00		
	ϕt precast to agg	0.90	0.90	0.90	1.00	1.00	1.00	1.00		
	ϕt CIP to agg/soil	0.80	0.80	0.80	1.00	1.00	1.00	1.00		
	ϕt soil to soil	0.90	0.90	0.90	1.00	1.00	1.00	1.00		
	ϕt precast to precast	0.90	0.90	0.90	1.00	1.00	1.00	1.00		
	concrete interface - eccentricity limit	0.45	0.45	0.45	0.40	0.40	0.45	0.45		
	bearing on soil - eccentricity limit	0.33	0.33	0.33	0.40	0.40	0.40	0.33		

© S T O N E S T R O N G S Y S T E M S

STONE STRONG GRAVITY CALCULATIONS - ver 6.1

Project Name: IDEA Submittal
Location:
Job#: 20004.00
Section: Problem 1 (checklist C7, Gravity Wall)
Calc by: D Thiele

(AASHTO 8th Edition, 2017)

3/24/20 11:31

Notes
assumed properties for foundation soil
Barrier load (500 plf, CT in Extereme Load Case 2) applied at base of moment slab

Complete internal analaysis results for top 3 feet

Wall Configuration

			setback (in)		modular units		unit fill		soil wedge		CIP Extension		
unit	w (in)	h (ft)	face	tail	Wb (lb)	xb (in)	Wa (lb)	xa (in)	Ws (lb)	xs (in)	we (in)	h_t	Internal
12" cp	50.0	1.00	0.0	7.0	604	24.0	0	24.0	0	0.0			Internal Stability OK!
V24	43.0	3.00	0.0	0.0	750	19.2	594	22.8	0	0.0			
													Internal Stability OK!
	43.0	4.00	0.0	7.0	1,354	21.3	594	22.8	0	0.0			

backfill height **4.00** feet

ω= 0.00 deg
ω'= 8.30 deg

interface friction angle
δ 25.5 deg

lateral load above wall **500** plf
height above top of wall **-1** feet

Retained Soil

γ **135** pcf
ϕ **34** deg

Internal ONLY

Aggregate Unit Fill

γ **110** pcf

© STONE STRONG SYSTEMS

STONE STRONG GRAVITY CALCULATIONS - ver 6.1

Project Name:	IDEA Submittal
Location:	
Job#:	20004.00
Section:	Problem 1 (checklist C7, Gravity Wall)
Calc by:	D Thiele

3/24/20 11:31

Seismic Load PGA [ ] G site class (A to E or 1) [D] Fpga 1.60 Fa 1.60 k_h 0.00

Backfill Slope & Surcharge

		rise in grade	LL surcharge	tier height
length 1	30 feet (horizontal)	ft	250 psf	ft
length 2	feet (horizontal)	ft	psf	ft
length 3	feet (horizontal)	ft	psf	ft
length 4	feet (horizontal)	ft	psf	

effective slope H:1V slope β 0.0 deg avg q 250 psf

failure plane α 54.90 deg zone of influence 6.39 ft

Ground Surface & Trial Wedge Plot

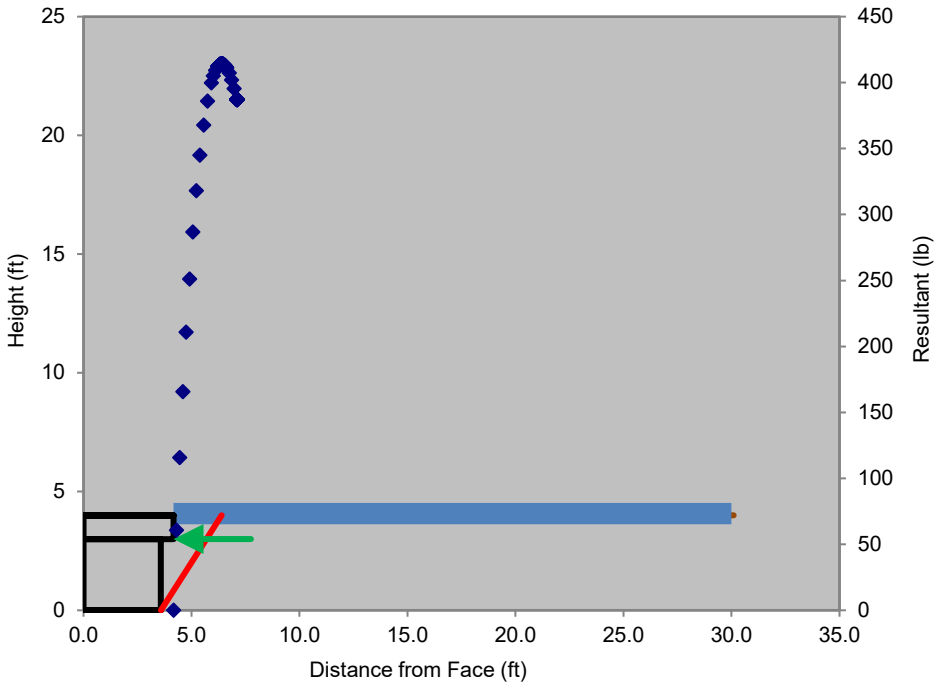

Unfactored Loads

K_a =	0.199	K_{AE} =	0.199
P_h =	205 lb	ΔK_{AE} =	0.000
P_v =	64 lb	P_{IR} =	0 lb
Q_{lh} =	190 lb	ΔP_{AEh} =	0 lb
Q_{lv} =	59 lb	ΔP_{AEv} =	0 lb

© S T O N E S T R O N G S Y S T E M S

STONE STRONG SYSTEMS®

STONE STRONG GRAVITY CALCULATIONS - ver 6.1

Project Name: IDEA Submittal
Location:
Job#: 20004.00
Section: Problem 1 (checklist C7, Gravity Wall)
Calc by: D Thiele

3/24/20 11:31

	Load Cases:	Strngth I-a	Strngth I-b	Strngth IV	Extrme I-a (EQ)	Extrme I-b (EQ)	Extrme II (CT)	Service I		
Factored Loading	*Overturning (lb-ft):*	1,077	1,077	411	274	274	1,964	654	**OK!**	**Max Utiliization**
	Sliding (lb):	641	641	308	205	205	801	396	**OK!**	55%
	Bearing (psf):								**OK!**	
	e (ft):	0.30	0.02	0.03	0.02	0.02	0.87	0.01	**OK!**	
	Bf' (ft):									
Factored Resistance	*Overturning (lb-ft):*	3,814	8,619	5,184	3,546	3,546	3,658	5,853		**Min Capacity/Demand Ratio**
	Sliding (lb):	1,603	3,193	2,185	1,781	1,781	1,802	2,558		1.81
	Bearing (psf):									
	(@ interface) Max e (ft):	1.58	1.58	1.58	1.40	1.40	1.58	1.58		
Load & Resistance Factors	LL	1.75	1.75	0.00	0.00	0.00	0.50	1.00		
	EH	1.50	1.50	1.50	1.00	1.00	1.00	1.00		
	EQ	0.00	0.00	0.00	1.00	1.00	0.00	0.00		
	CT	0.00	0.00	0.00	0.00	0.00	1.00	0.00		
	LL Surcharge over Wall	0.00	1.75	0.00	0.00	0.00	0.00	1.00		
	DC	0.90	1.25	1.50	1.00	1.00	1.00	1.00		
	EV	1.00	1.35	1.35	1.00	1.00	1.00	1.00		
	BC	0.45	0.45	0.45	1.00	1.00	1.00	1.00		
	ϕt precast to agg	0.90	0.90	0.90	1.00	1.00	1.00	1.00		
	ϕt CIP to agg/soil	0.80	0.80	0.80	1.00	1.00	1.00	1.00		
	ϕt soil to soil	0.90	0.90	0.90	1.00	1.00	1.00	1.00		
	ϕt precast to precast	0.90	0.90	0.90	1.00	1.00	1.00	1.00		
	concrete interface - eccentricity limit	0.45	0.45	0.45	0.40	0.40	0.45	0.45		
	bearing on soil - eccentricity limit	0.33	0.33	0.33	0.40	0.40	0.40	0.33		

© S T O N E S T R O N G S Y S T E M S

2.2.4 GRAVITY DESIGN PROBLEM 2 (C7 CHECKLIST)

Gravity Wall Analysis, Spreadsheet Output:
External Analysis – 12 feet height
Internal Analysis – top 9 feet
Internal Analysis – top 6 feet
Internal Analysis – top 3 feet

© Stone Strong Systems

STONE STRONG GRAVITY CALCULATIONS - ver 6.1

Project Name: IDEA Submittal
Location:
Job#: 20004.00
Section: Problem 2 (checklist C7, Gravity Wall)
Calc by: D Thiele

(AASHTO 8th Edition, 2017)

3/24/20 11:34

Notes assumed properties for foundation soil

Wall Configuration

			setback (in)		modular units		unit fill		soil wedge		CIP Extension		
unit	w (in)	h (ft)	face	tail	Wb (lb)	xb (in)	Wa (lb)	xa (in)	Ws (lb)	xs (in)	we (in)	h_t	Internal
V24	43.0	3.00	0.0	-42.0	750	20.2	594	23.8	193	47.7			Internal Stability OK!
V24	43.0	3.00	0.0	-42.0	750	20.2	594	23.8	578	53.9			Internal Stability OK!
V24-62	61.0	3.00	0.0	-24.0	850	28.1	1,046	32.0	468	70.0			Internal Stability OK!
V24-86	85.0	3.00	0.0	0.0	950	39.0	1,621	44.1	0	0.0			
													External Stability OK!
	85.0	12.00	0.0	-42.0	3,300	27.6	3,855	34.6	1,238	59.0			

backfill height **12.00** feet ω= 0.00 deg interface friction angle
exposed height 11.00 feet ω'= -16.26 deg δ 25.5 deg

Retained Soil
γ **135** pcf
ϕ **34** deg

Foundation Soil
γ **125** pcf
ϕ **30** deg
c' psf

base embedment **12** in
base thickness **9** in
base material **agg**
toe slope H:1V slope

bearing pressure **n/a** psf (net)
(if specified)

Aggregate Unit Fill
γ **110** pcf

composite friction coefficient μ_b 0.69

© STONE STRONG SYSTEMS

STONE STRONG GRAVITY CALCULATIONS - ver 6.1

Project Name: IDEA Submittal
Location:
Job#: 20004.00
Section: Problem 2 (checklist C7, Gravity Wall)
Calc by: D Thiele

3/24/20 11:34

Seismic Load PGA [ ] G site class (A to E or 1) [D] Fpga 1.60 Fa 1.60 k_h 0.00

Backfill Slope & Surcharge

		backslope		LL surcharge		tier height
length 1	32 feet (horizontal)	2	H:1V slope		psf	ft
length 2	5 feet (horizontal)		H:1V slope		psf	ft
length 3	feet (horizontal)		H:1V slope		psf	ft
length 4	feet (horizontal)		H:1V slope		psf	

effective slope 2.00 H:1V slope β 26.6 deg avg q 0 psf

failure plane α 50.25 deg zone of influence 26.66 ft

Ground Surface & Trial Wedge Plot

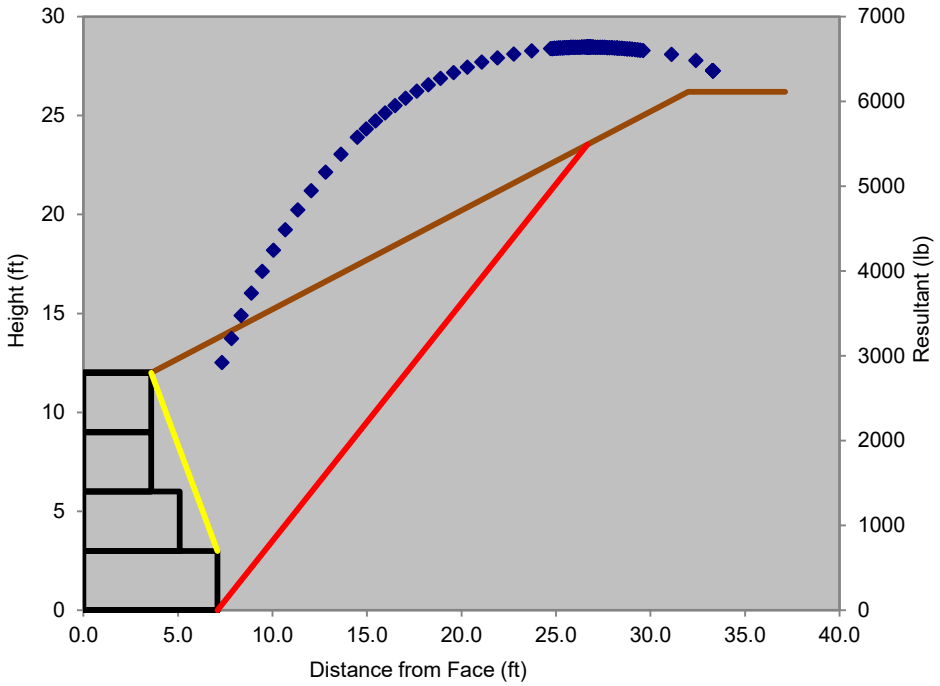

Unfactored Loads

K_a =	0.683	K_{AE} =	0.683
P_h =	4,954 lb	ΔK_{AE} =	0.000
P_v =	4,423 lb	P_{IR} =	0 lb
Q_{lh} =	0 lb	ΔP_{AEh} =	0 lb
Q_{lv} =	0 lb	ΔP_{AEv} =	0 lb

© STONE STRONG SYSTEMS

STONE STRONG SYSTEMS®

STONE STRONG GRAVITY CALCULATIONS - ver 6.1

Project Name: IDEA Submittal
Location:
Job#: 20004.00
Section: Problem 2 (checklist C7, Gravity Wall)
Calc by: D Thiele

3/24/20 11:34

	Load Cases:	Strngth I-a	Strngth I-b	Strngth IV	Extrme I-a (EQ)	Extrme I-b (EQ)	Extrme II (CT)	Service I		
Factored Loading	*Overturning (lb-ft):*	29,722	29,722	29,722	19,814	19,814	19,814	19,814	**OK!**	**Max Utiliization**
	Sliding (lb):	7,430	7,430	7,430	4,954	4,954	4,954	4,954	**OK!**	93%
	Bearing (psf):	2,905	3,323	3,477	2,378	2,378	2,378	2,378	**OK!**	
	e (ft):	1.34	1.23	1.23	1.19	1.19	1.19	1.19	**OK!**	
	Bf' (ft):	5.32	5.54	5.53	5.61	5.61	5.61	5.61		
Factored Resistance	*Overturning (lb-ft):*	59,845	67,319	69,220	47,521	47,521	47,521	47,521		**Min Capacity/Demand Ratio**
	Sliding (lb):	7,982	9,629	10,058	7,782	7,782	7,782	7,782		1.07
	Bearing (psf):	5,162	5,302	5,297	11,881	11,881	11,881	11,881		
	(@ top of base) Max e (ft):	2.36	2.36	2.36	2.83	2.83	2.83	2.36		
Load & Resistance Factors	LL	1.75	1.75	0.00	0.00	0.00	0.50	1.00		
	EH	1.50	1.50	1.50	1.00	1.00	1.00	1.00		
	EQ	0.00	0.00	0.00	1.00	1.00	0.00	0.00		
	CT	0.00	0.00	0.00	0.00	0.00	1.00	0.00		
	LL Surcharge over Wall	0.00	1.75	0.00	0.00	0.00	0.00	1.00		
	DC	0.90	1.25	1.50	1.00	1.00	1.00	1.00		
	EV	1.00	1.35	1.35	1.00	1.00	1.00	1.00		
	BC	0.45	0.45	0.45	1.00	1.00	1.00	1.00		
	ϕt precast to agg	0.90	0.90	0.90	1.00	1.00	1.00	1.00		
	ϕt CIP to agg/soil	0.80	0.80	0.80	1.00	1.00	1.00	1.00		
	ϕt soil to soil	0.90	0.90	0.90	1.00	1.00	1.00	1.00		
	ϕt precast to precast	0.90	0.90	0.90	1.00	1.00	1.00	1.00		
	concrete interface - eccentricity limit	0.45	0.45	0.45	0.40	0.40	0.45	0.45		
	bearing on soil - eccentricity limit	0.33	0.33	0.33	0.40	0.40	0.40	0.33		

© S T O N E S T R O N G S Y S T E M S

STONE STRONG SYSTEMS®

STONE STRONG GRAVITY CALCULATIONS - ver 6.1

Project Name: IDEA Submittal
Location:
Job#: 20004.00
Section: Problem 2 (checklist C7, Gravity Wall)
Calc by: D Thiele

(AASHTO 8th Edition, 2017)

3/24/20 11:34

Notes assumed properties for foundation soil

Complete internal analaysis results for top 9 feet

Wall Configuration

			setback (in)		modular units		unit fill		soil wedge		CIP Extension		
unit	w (in)	h (ft)	face	tail	Wb (lb)	xb (in)	Wa (lb)	xa (in)	Ws (lb)	xs (in)	we (in)	h_t	Internal
V24	43.0	3.00	0.0	-18.0	750	19.2	594	22.8	124	45.0			Internal Stability OK!
V24	43.0	3.00	0.0	-18.0	750	19.2	594	22.8	371	49.0			Internal Stability OK!
V24-62	61.0	3.00	0.0	0.0	850	27.1	1,046	31.0	0	0.0			
													Internal Stability OK!
	61.0	9.00	0.0	-18.0	2,350	22.1	2,234	26.6	495	48.0			

backfill height **9.00** feet ω= 0.00 deg interface friction angle

ω'= -9.46 deg δ 25.5 deg

Retained Soil

γ **135** pcf
ϕ **34** deg

Internal ONLY

Aggregate Unit Fill

γ **110** pcf

© STONE STRONG SYSTEMS

STONE STRONG GRAVITY CALCULATIONS - ver 6.1

Project Name: IDEA Submittal
Location:
Job#: 20004.00
Section: Problem 2 (checklist C7, Gravity Wall)
Calc by: D Thiele

3/24/20 11:34

Seismic Load PGA [ ] G site class (A to E or 1) [D] Fpga 1.60 Fa 1.60 k_h 0.00

Backfill Slope & Surcharge

		backslope	LL surcharge	tier height
length 1	32 feet (horizontal)	2 H:1V slope	psf	ft
length 2	5 feet (horizontal)	H:1V slope	psf	ft
length 3	feet (horizontal)	H:1V slope	psf	ft
length 4	feet (horizontal)	H:1V slope	psf	

effective slope 2.00 H:1V slope β 26.6 deg avg q 0 psf

failure plane α 49.86 deg zone of influence 19.30 ft

Ground Surface & Trial Wedge Plot

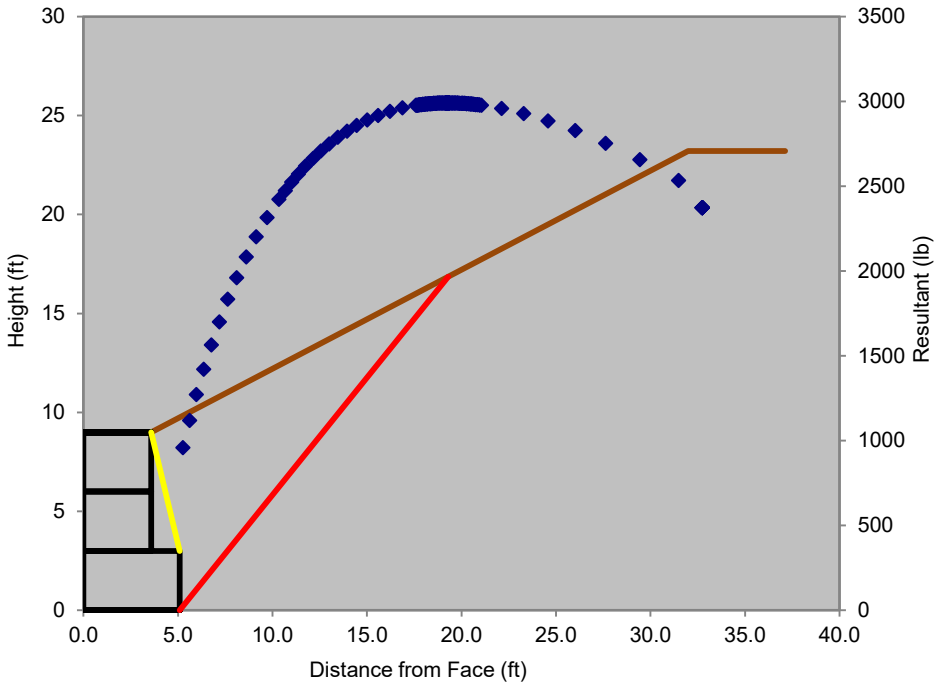

Unfactored Loads

K_a =	0.547	K_{AE} =	0.547
P_h =	2,451 lb	ΔK_{AE} =	0.000
P_v =	1,714 lb	P_{IR} =	0 lb
Q_{lh} =	0 lb	ΔP_{AEh} =	0 lb
Q_{lv} =	0 lb	ΔP_{AEv} =	0 lb

© STONE STRONG SYSTEMS

STONE STRONG SYSTEMS®

STONE STRONG GRAVITY CALCULATIONS - ver 6.1

Project Name: IDEA Submittal
Location:
Job#: 20004.00
Section: Problem 2 (checklist C7, Gravity Wall)
Calc by: D Thiele

3/24/20 11:34

	Load Cases:	Strngth I-a	Strngth I-b	Strngth IV	Extrme I-a (EQ)	Extrme I-b (EQ)	Extrme II (CT)	Service I	
Factored Loading	*Overturning (lb-ft):*	11,032	11,032	11,032	7,354	7,354	7,354	7,354	**OK!**
	Sliding (lb):	3,677	3,677	3,677	2,451	2,451	2,451	2,451	**OK!**
	Bearing (psf):								**OK!**
	e (ft):	1.05	0.91	0.90	0.86	0.86	0.86	0.86	**OK!**
	Bf' (ft):								
Factored Resistance	*Overturning (lb-ft):*	21,009	24,464	25,544	17,584	17,584	17,584	17,584	
	Sliding (lb):	5,034	6,162	6,535	5,154	5,154	5,154	5,154	
	Bearing (psf):								
	(@ interface) Max e (ft):	2.25	2.25	2.25	2.00	2.00	2.25	2.25	
Load & Resistance Factors	LL	1.75	1.75	0.00	0.00	0.00	0.50	1.00	
	EH	1.50	1.50	1.50	1.00	1.00	1.00	1.00	
	EQ	0.00	0.00	0.00	1.00	1.00	0.00	0.00	
	CT	0.00	0.00	0.00	0.00	0.00	1.00	0.00	
	LL Surcharge over Wall	0.00	1.75	0.00	0.00	0.00	0.00	1.00	
	DC	0.90	1.25	1.50	1.00	1.00	1.00	1.00	
	EV	1.00	1.35	1.35	1.00	1.00	1.00	1.00	
	BC	0.45	0.45	0.45	1.00	1.00	1.00	1.00	
	ϕt precast to agg	0.90	0.90	0.90	1.00	1.00	1.00	1.00	
	ϕt CIP to agg/soil	0.80	0.80	0.80	1.00	1.00	1.00	1.00	
	ϕt soil to soil	0.90	0.90	0.90	1.00	1.00	1.00	1.00	
	ϕt precast to precast	0.90	0.90	0.90	1.00	1.00	1.00	1.00	
	concrete interface - eccentricity limit	0.45	0.45	0.45	0.40	0.40	0.45	0.45	
	bearing on soil - eccentricity limit	0.33	0.33	0.33	0.40	0.40	0.40	0.33	

Max Utiliization
73%

Min Capacity/Demand Ratio
1.37

© STONE STRONG SYSTEMS

STONE STRONG SYSTEMS®

STONE STRONG GRAVITY CALCULATIONS - ver 6.1

Project Name: IDEA Submittal
Location:
Job#: 20004.00
Section: Problem 2 (checklist C7, Gravity Wall)
Calc by: D Thiele

(AASHTO 8th Edition, 2017)

3/24/20 11:34

Notes assumed properties for foundation soil

Complete internal analaysis results for top 6 feet

Wall Configuration

			setback (in)		modular units		unit fill		soil wedge		CIP Extension		
unit	w (in)	h (ft)	face	tail	Wb (lb)	xb (in)	Wa (lb)	xa (in)	Ws (lb)	xs (in)	we (in)	h_t	Internal
V24	43.0	3.00	0.0	0.0	750	19.2	594	22.8					Internal Stability OK!
V24	43.0	3.00	0.0	0.0	750	19.2	594	22.8					
													Internal Stability OK!
	43.0	6.00	0.0	0.0	1,500	19.2	1,188	22.8	0	0.0			

backfill height 6.00 feet ω= 0.00 deg interface friction angle

ω'= 0.00 deg δ 17.0 deg

Retained Soil γ 135 pcf

ϕ 34 deg

Internal ONLY

Aggregate Unit Fill γ 110 pcf

© STONE STRONG SYSTEMS

STONE STRONG GRAVITY CALCULATIONS - ver 6.1

Project Name: IDEA Submittal
Location:
Job#: 20004.00
Section: Problem 2 (checklist C7, Gravity Wall)
Calc by: D Thiele

3/24/20 11:34

Seismic Load PGA [ ] G site class (A to E or 1) [D] Fpga 1.60 Fa 1.60 k_h 0.00

Backfill Slope & Surcharge

		backslope		LL surcharge		tier height
length 1	32 feet (horizontal)	2	H:1V slope		psf	ft
length 2	5 feet (horizontal)		H:1V slope		psf	ft
length 3	feet (horizontal)		H:1V slope		psf	ft
length 4	feet (horizontal)		H:1V slope		psf	

effective slope 2.00 H:1V slope β 26.6 deg avg q 0 psf

failure plane α 49.80 deg zone of influence 12.36 ft

Ground Surface & Trial Wedge Plot

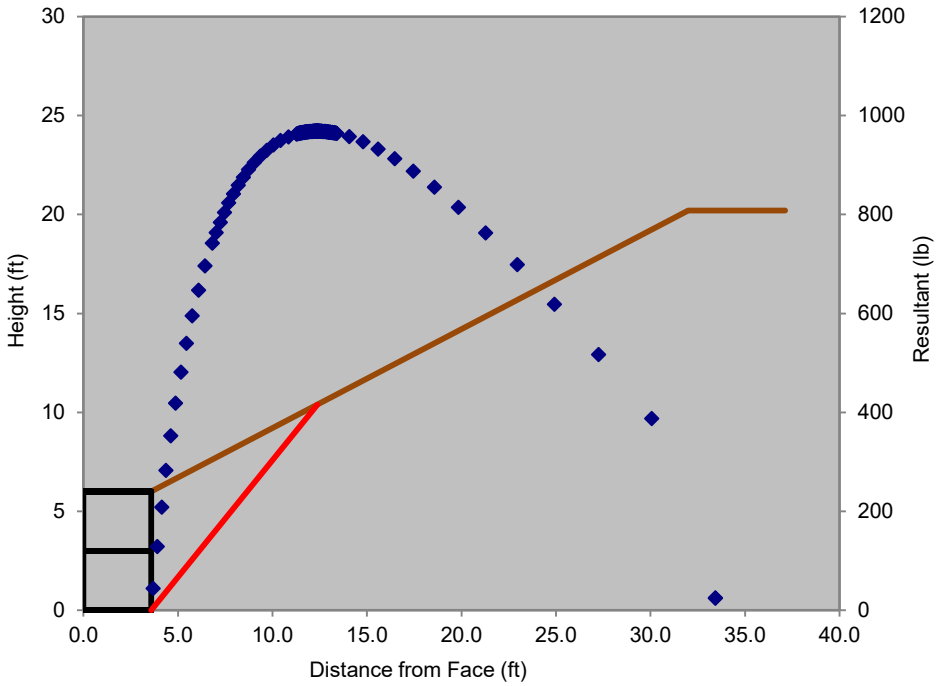

Unfactored Loads

K_a =	0.399	K_{AE} =	0.399
P_h =	926 lb	ΔK_{AE} =	0.000
P_v =	283 lb	P_{IR} =	0 lb
Q_{lh} =	0 lb	ΔP_{AEh} =	0 lb
Q_{lv} =	0 lb	ΔP_{AEv} =	0 lb

© S T O N E S T R O N G S Y S T E M S

STONE STRONG SYSTEMS®

STONE STRONG GRAVITY CALCULATIONS - ver 6.1

Project Name: IDEA Submittal
Location:
Job#: 20004.00
Section: Problem 2 (checklist C7, Gravity Wall)
Calc by: D Thiele

3/24/20 11:34

	Load Cases:	Strngth I-a	Strngth I-b	Strngth IV	Extrme I-a (EQ)	Extrme I-b (EQ)	Extrme II (CT)	Service I		
Factored Loading	*Overturning (lb-ft):*	2,778	2,778	2,778	1,852	1,852	1,852	1,852	**OK!**	**Max Utiliization**
	Sliding (lb):	1,389	1,389	1,389	926	926	926	926	**OK!**	63%
	Bearing (psf):								**OK!**	
	e (ft):	0.77	0.59	0.55	0.53	0.53	0.53	0.53	**OK!**	
	Bf' (ft):									
Factored Resistance	*Overturning (lb-ft):*	5,453	6,925	7,525	5,197	5,197	5,197	5,197		**Min Capacity/Demand Ratio**
	Sliding (lb):	2,207	2,804	3,042	2,458	2,458	2,458	2,458		1.59
	Bearing (psf):									
	(@ interface) Max e (ft):	1.58	1.58	1.58	1.40	1.40	1.58	1.58		
Load & Resistance Factors	LL	1.75	1.75	0.00	0.00	0.00	0.50	1.00		
	EH	1.50	1.50	1.50	1.00	1.00	1.00	1.00		
	EQ	0.00	0.00	0.00	1.00	1.00	0.00	0.00		
	CT	0.00	0.00	0.00	0.00	0.00	1.00	0.00		
	LL Surcharge over Wall	0.00	1.75	0.00	0.00	0.00	0.00	1.00		
	DC	0.90	1.25	1.50	1.00	1.00	1.00	1.00		
	EV	1.00	1.35	1.35	1.00	1.00	1.00	1.00		
	BC	0.45	0.45	0.45	1.00	1.00	1.00	1.00		
	ϕt precast to agg	0.90	0.90	0.90	1.00	1.00	1.00	1.00		
	ϕt CIP to agg/soil	0.80	0.80	0.80	1.00	1.00	1.00	1.00		
	ϕt soil to soil	0.90	0.90	0.90	1.00	1.00	1.00	1.00		
	ϕt precast to precast	0.90	0.90	0.90	1.00	1.00	1.00	1.00		
	concrete interface - eccentricity limit	0.45	0.45	0.45	0.40	0.40	0.45	0.45		
	bearing on soil - eccentricity limit	0.33	0.33	0.33	0.40	0.40	0.40	0.33		

© S T O N E S T R O N G S Y S T E M S

STONE STRONG SYSTEMS®

STONE STRONG GRAVITY CALCULATIONS - ver 6.1

Project Name: IDEA Submittal
Location:
Job#: 20004.00
Section: Problem 2 (checklist C7, Gravity Wall)
Calc by: D Thiele

(AASHTO 8th Edition, 2017)

3/24/20 11:34

Notes assumed properties for foundation soil

Complete internal analaysis results for top 3 feet

Wall Configuration

			setback (in)		modular units		unit fill		soil wedge		CIP Extension		
unit	w (in)	h (ft)	face	tail	Wb (lb)	xb (in)	Wa (lb)	xa (in)	Ws (lb)	xs (in)	we (in)	h_t	Internal
V24	43.0	3.00	0.0	0.0	750	19.2	594	22.8					
													Internal Stability OK!
	43.0	3.00	0.0	0.0	750	19.2	594	22.8	0	0.0			

backfill height 3.00 feet

ω= 0.00 deg

ω'= 0.00 deg

interface friction angle

δ 17.0 deg

Retained Soil

γ 135 pcf

ϕ 34 deg

Internal ONLY

Aggregate Unit Fill

γ 110 pcf

© STONE STRONG SYSTEMS

STONE STRONG GRAVITY CALCULATIONS - ver 6.1

Project Name:	IDEA Submittal
Location:	
Job#:	20004.00
Section:	Problem 2 (checklist C7, Gravity Wall)
Calc by:	D Thiele

3/24/20 11:34

Seismic Load PGA [ ] G site class (A to E or 1) [D] Fpga 1.60 Fa 1.60 k_h 0.00

Backfill Slope & Surcharge

		backslope		LL surcharge		tier height
length 1	32 feet (horizontal)	2	H:1V slope		psf	ft
length 2	5 feet (horizontal)		H:1V slope		psf	ft
length 3	feet (horizontal)		H:1V slope		psf	ft
length 4	feet (horizontal)		H:1V slope		psf	

effective slope 2.00 H:1V slope β 26.6 deg avg q 0 psf

failure plane α 49.80 deg zone of influence 7.97 ft

Ground Surface & Trial Wedge Plot

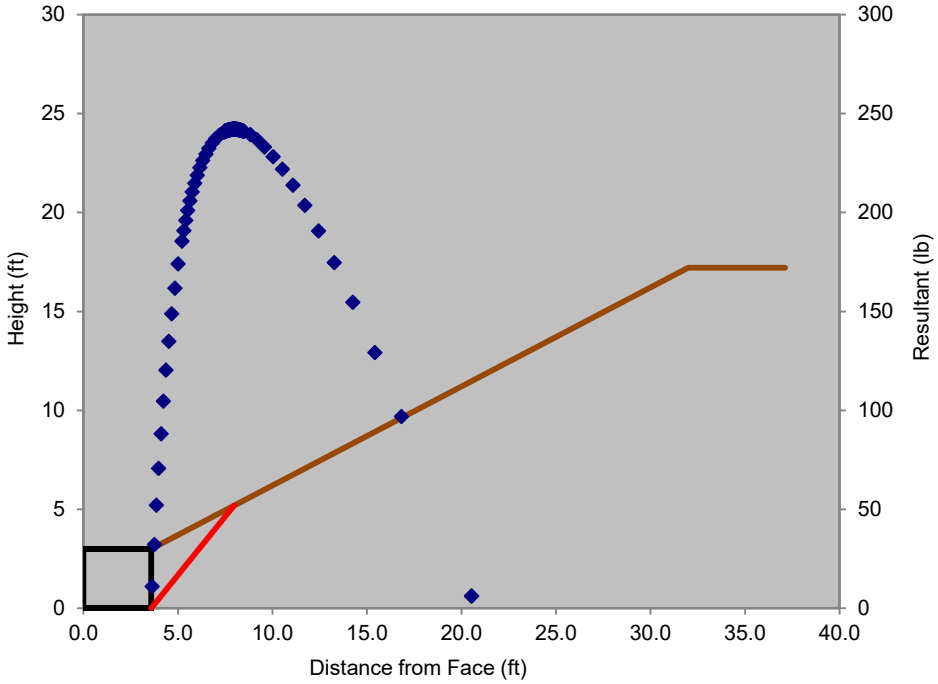

Unfactored Loads

K_a =	0.399	K_{AE} =	0.399
P_h =	232 lb	ΔK_{AE} =	0.000
P_v =	71 lb	P_{IR} =	0 lb
Q_{lh} =	0 lb	ΔP_{AEh} =	0 lb
Q_{lv} =	0 lb	ΔP_{AEv} =	0 lb

© S T O N E S T R O N G S Y S T E M S

STONE STRONG GRAVITY CALCULATIONS - ver 6.1

Project Name: IDEA Submittal
Location:
Job#: 20004.00
Section: Problem 2 (checklist C7, Gravity Wall)
Calc by: D Thiele

3/24/20 11:34

	Load Cases:	Strngth I-a	Strngth I-b	Strngth IV	Extrme I-a (EQ)	Extrme I-b (EQ)	Extrme II (CT)	Service I	
Factored Loading	*Overturning (lb-ft):*	347	347	347	232	232	232	232	**OK!**
	Sliding (lb):	347	347	347	232	232	232	232	**OK!**
	Bearing (psf):								**OK!**
	e (ft):	0.15	0.12	0.12	0.11	0.11	0.11	0.11	**OK!**
	Bf' (ft):								
Factored Resistance	*Overturning (lb-ft):*	2,355	3,091	3,391	2,351	2,351	2,351	2,351	
	Sliding (lb):	1,199	1,498	1,617	1,360	1,360	1,360	1,360	
	Bearing (psf):								
	(@ interface) Max e (ft):	1.58	1.58	1.58	1.40	1.40	1.58	1.58	
Load & Resistance Factors	LL	1.75	1.75	0.00	0.00	0.00	0.50	1.00	
	EH	1.50	1.50	1.50	1.00	1.00	1.00	1.00	
	EQ	0.00	0.00	0.00	1.00	1.00	0.00	0.00	
	CT	0.00	0.00	0.00	0.00	0.00	1.00	0.00	
	LL Surcharge over Wall	0.00	1.75	0.00	0.00	0.00	0.00	1.00	
	DC	0.90	1.25	1.50	1.00	1.00	1.00	1.00	
	EV	1.00	1.35	1.35	1.00	1.00	1.00	1.00	
	BC	0.45	0.45	0.45	1.00	1.00	1.00	1.00	
	ϕt precast to agg	0.90	0.90	0.90	1.00	1.00	1.00	1.00	
	ϕt CIP to agg/soil	0.80	0.80	0.80	1.00	1.00	1.00	1.00	
	ϕt soil to soil	0.90	0.90	0.90	1.00	1.00	1.00	1.00	
	ϕt precast to precast	0.90	0.90	0.90	1.00	1.00	1.00	1.00	
	concrete interface - eccentricity limit	0.45	0.45	0.45	0.40	0.40	0.45	0.45	
	bearing on soil - eccentricity limit	0.33	0.33	0.33	0.40	0.40	0.40	0.33	

Max Utiliization
29%

Min Capacity/Demand Ratio
3.45

© STONE STRONG SYSTEMS

3.1.1 CONSTRUCTION INNOVATIONS

No attachments

© Stone Strong Systems

3.1.2 INSTALLATION MANUAL

Stone Strong Field Construction Manual

© Stone Strong Systems

STONE STRONG SYSTEMS®

Field Construction Manual

Stone Strong Systems Precast Modular Unit Retaining Wall System

2020

Stone Strong, LLC

1 **Introduction**
Construction Responsibilities

3 **Material**
Delivery
Storage
Handling

5 **Equipment and Supplies**

6 **Preparation**
Site preparation
Excavation
Foundation Preperation

7 **Wall Base Construction**

8 **Gravity Wall Unit Installation**
First Course
Subsequent Courses

13 **Backfill Placement**
Compaction

14 **Cleanup**
Troubleshooting

15 **Top Wall Treatments**
Wall Capping
Fencing

18 **Radius Tables**

21 **Glossary**

INTRODUCTION

This manual is designed to provide general information and assist in the proper techniques required to build Stone Strong walls. The manual covers the basics of wall construction, and contains many of the details encountered in site work. Look to our web site stonestrong.com or the local Stone Strong Producer for more information.

CONSTRUCTION RESPONSIBILITIES

Stone Strong Dealer

Stone Strong representatives may assist the owner, contractor and inspectors in scheduling of materials, construction procedures, contract documents, plans and specifications. The representatives are available to assist and train the contractor and inspectors as requested and necessary.

Engineer or Owner's Representative

Owner representative or engineer is responsible for the enforcement of the contract documents, plans and specifications. Owner shall employ services of a material engineering firm to provide quality control testing during embankment construction. Owner and engineer shall not be responsible for means or methods of construction or for safety of workers or of the public.

Contractor

The contractor will be responsible for:

- Checking the materials upon delivery to assure that proper materials have been received.
- Protecting the materials from damage. Damaged material shall not be in corporated into the wall or the reinforced soil embankments.
- Preventing excessive mud, concrete, adhesives and other substances that may adhere from coming in contact with the materials.
- Furnishing and installing Stone Strong unit to the lines and grades shown on the plans and as specified herein.
- The contractor is solely responsible for safety.

MATERIALS, DELIVERY STORAGE AND HANDLING

Precast modular unit will be manufactured under license from Stone Strong, LLC.

Dimension tolerances for precast modular unit shall be +/- 1/8 inch for horizontal and vertical dimensions of the face and 1/2 inch to -1/4 inch for the face-to-tail width.

Concrete for precast modular unit shall have a minimum 28-day compressive strength of 4,000psi. Entrained air content shall be between 5 and 7%.

Reinforcing steel (if used) shall be Grade 60. Minimum clear cover to reinforcement shall be 1½ inches.

Check the materials upon delivery to assure that proper material has been received. Remove damaged or otherwise unsuitable material from the site.

Exposed faces of Stone Strong unit shall be free of chips, cracks, bug holes, stains, and other imperfections distracting from their appearance when viewed from a distance of 10 feet.

Prevent mud, concrete, adhesives and other substances that may harm appearance of unit from coming in contact with the system components.

Geogrid filter, prefabricated drainage composite shall be delivered, stored, and handled in accordance with ASTM D 4873.

STONE STRONG SYSTEMS®

1/4/2019

Unit Type	Description	Conc. Wt. (lbs)	Void Vol (ft3)	Length (ft)	Height (ft)	Unit Width (in)
Standard units (verify availability - not all units available from every producer)						
24	24SF unit (24 square feet)	6,000	43.21	8.00	3.00	44.0
24-ME	24SF Mass Extender unit	10,000	44.94	8.00	3.00	56.0
24-62	24-62 unit (extended 24SF)	6,800	76.05	8.00	3.00	62.0
24-86	24-86 unit (extended 24SF)	7,600	117.90	8.00	3.00	86.0
6	6SF unit (6 square feet)	1,500	10.95	4.00	1.50	44.0
3	3SF unit (3 square feet)	750	5.48	2.00	1.50	44.0
6-28	Mini 6SF unit	950	6.65	4.00	1.50	28.0
3-28	Mini 3SF unit	475	3.33	2.00	1.50	28.0
Alternate top units (not typically used - regular 24SF top unit is used in most applications, analyzed as regular 24SF unit)						
Cap	Cap unit	1,600	0.00	8.00	0.58	32.0
DF	Dual Face unit	3,500	0.00	8.00	1.50	28.0
Vertical stack units (modified recess and face to permit construction of a vertical face)						
V24	24SF unit (24 square feet)	6,000	43.21	8.00	3.00	43.0
V24-ME	24SF Mass Extender unit	10,000	44.94	8.00	3.00	55.0
V24-62	24-62 unit (extended 24SF)	6,800	76.05	8.00	3.00	61.0
V24-86	24-86 unit (extended 24SF)	7,600	117.90	8.00	3.00	85.0
V6	6SF unit (6 square feet)	1,500	10.95	4.00	1.50	44.0
V3	3SF unit (3 square feet)	750	5.48	2.00	1.50	44.0
V6-28	Mini 6SF unit	950	6.65	4.00	1.50	28.0
V3-28	Mini 3SF unit	475	3.33	2.00	1.50	28.0

Note: Check on availability of all units w/ local Producer/Dealer. Some units may have limited availabilty.

EQUIPMENT AND SUPPLIES

Contractor Supplied Materials and Tools

The following tools are recommended, but should not be limited to this list. Site conditions may require other equipment, tools and materials.

Tools and Equipment

Excavator	Laser Level
Skid Steer	4 foot Level
Front Loader	Shovels
Compactor	Brooms
Spreader Bar (48”)	Pry Bars
Chains	Labor

Materials

Wall Base Material	Off Site Borrow (if required)
Unit Fill Material	Filter Fabric (if required)
Drain Tile (if required)	Hand Rail (if required)

Geosynthetic strap reinforcement shall be Paraweb 2D-50 manufactured by Maccaferri, Inc.

Geogrid reinforcement shall be SF55 or SF110 manufactured by Synteen Technical Fabrics, Inc.

Substitution of a different type of geosynthetic shall not be allowed unless approved by the Architect/Engineer or Owner after submittal of shop drawings and test data.

SITE PREPARATION

- Review the approved site plan to confirm lot lines, wall location, length and elevations.
- Schedule preconstruction meeting.
- Verify the on-site soil conditions.
- Call the local utility companies to confirm the location of underground utilities.
- Obtain all necessary building permits.
- Confirm drainage to avoid erosion or buildup of water behind the wall.

EXCAVATION

Lay out the location and length of the wall. If possible, start the wall base as the lowest elevation of the wall. Set wall elevations using a laser level and stakes prior to excavating; due to the size of the Stone Strong unit this method will increase efficiency.

Excavate as required for installation of the retaining wall system. Use caution not to over-excavate beyond depth needed for the foundation.

Slope or shore excavation as necessary for safety and for conformance with applicable OSHA requirements.

FOUNDATION PREPARATION

Foundation soils shall be excavated as required for wall base to the dimensions shown on the plans. Foundation soil shall be observed by the Geotechnical Engineer to confirm that the bearing soils are similar to the design conditions or assumptions.

Foundation soil shall be proof rolled and compacted a minimum of 95 percent of the maximum dry density (ASTM D 698, Standard Proctor) and inspected by the Owner's engineer prior to placement of leveling pad materials. The contractor shall replace any unsuitable soils discovered during excavation at the direction of the engineer.

WALL BASE CONSTRUCTION

Construct base to the material and dimensions shown on the plans. Over excavated areas shall be filled with additional concrete or granular base material. Wall base shall consist of concrete with a minimum 28-day compressive strength of 3,000 psi, or a dense graded crushed aggregate. A minimum of 75% of coarse material shall have 2 or more fractured faces. Wall base material shall meet the following gradation:

Us Standard Sieve Size	Percent Passing
1-1/2”	100
3/4”	50-75
#4	0-10
#8	0-5

WALL BASE CONSTRUCTION

Compact the wall base to provide a hard and level surface to support the Stone Strong unit. Base material shall be compacted to a minimum of 95 percent of the maximum dry density (ASTM D 698, Standard Proctor).

Prepare and smooth the granular material to ensure complete contact of the first course with the wall base. The surface of granular base may be dressed with finer aggregate to aid leveling, provided that the thickness of dressing layer should not exceed 3 times the maximum particle size used OR 1/2 inch, whichever is greater.

WALL UNIT INSTALLATION

First Course

Place the first course of Stone Strong unit directly on the wall base (see detail 1). If possible, begin placing Stone Strong unit at the lowest section of the wall. The unit shall be leveled side-to-side, front-to-rear and with adjacent unit. Ensure Stone Strong units are in full contact with the compacted base. Adjacent unit should be in contact.
The first course is the most important to ensure accurate and acceptable results.
Leveling should be done by means of a 4 foot level across the top of the unit.

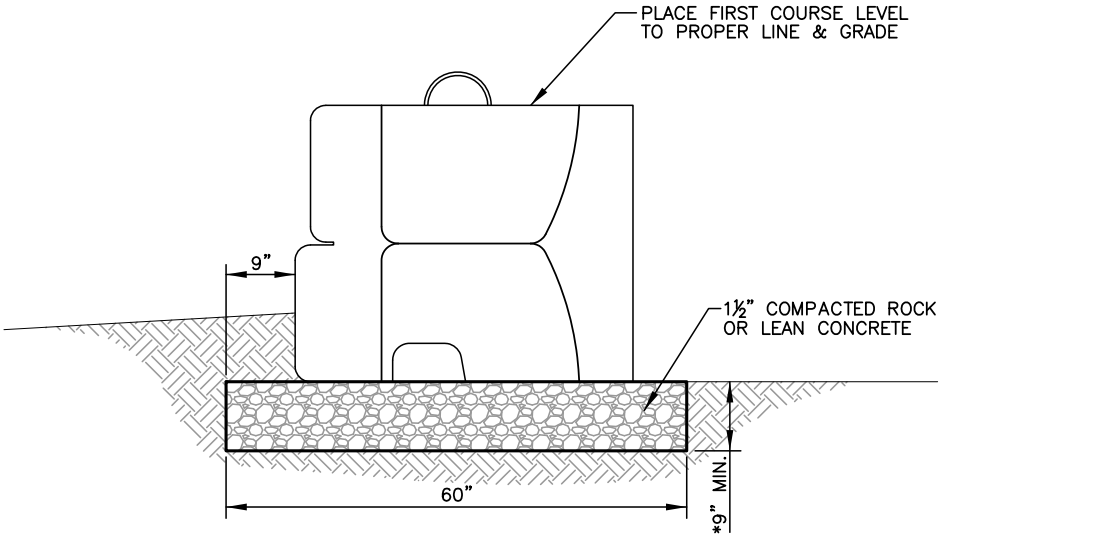

NOTE: BEARING CONDITIONS SHALL BE OBSERVED BY THE SITE GEOTECHNICAL ENGINEER. BASE DIMENSIONS MAY BE INCREASED TO ADDRESS DEFICIENT SOIL BEARING CONDITIONS.

*FOR WALL HEIGHTS OF 6' OR LESS, BASE THICKNESS MAY BE REDUCED TO 6".

If the wall base elevation varies refer to detail for wall base steps.

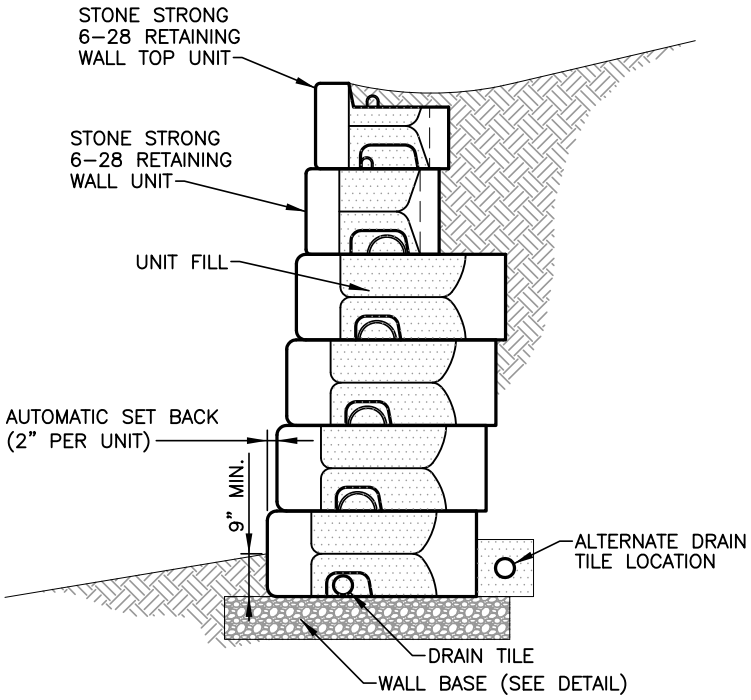

6SF GRAVITY WALL CROSS SECTION

NOT TO SCALE

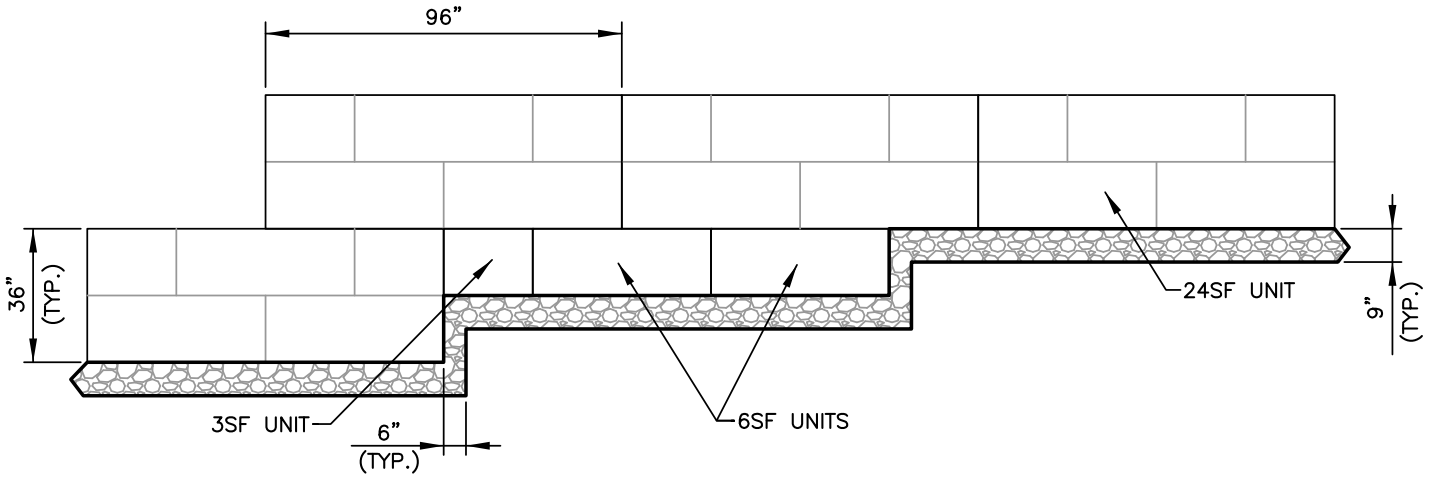

WALL BASE STEP

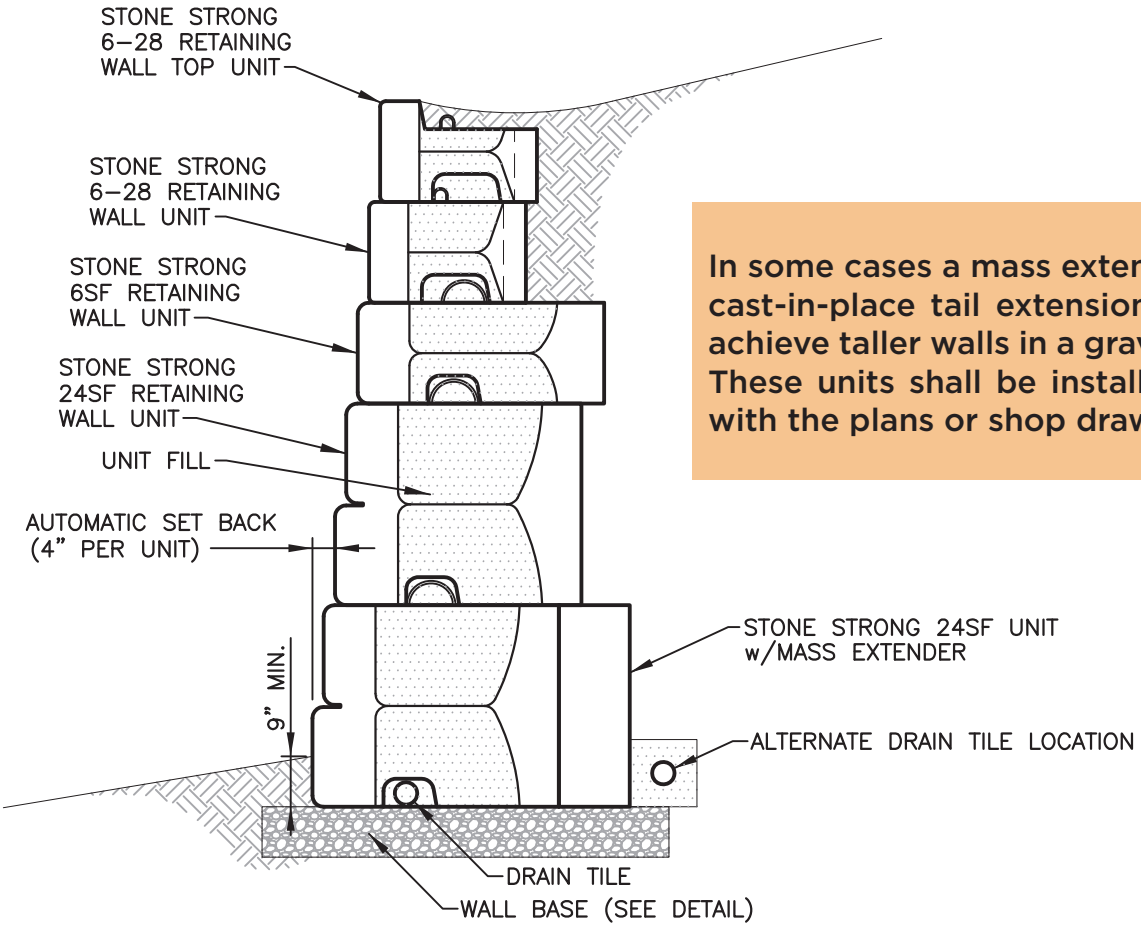

In some cases a mass extension unit or cast-in-place tail extension may be used to achieve taller walls in a gravity configuration. These units shall be installed in accordance with the plans or shop drawings.

GRAVITY WALL
CROSS SECTION w/MASS EXTENDER
NOT TO SCALE

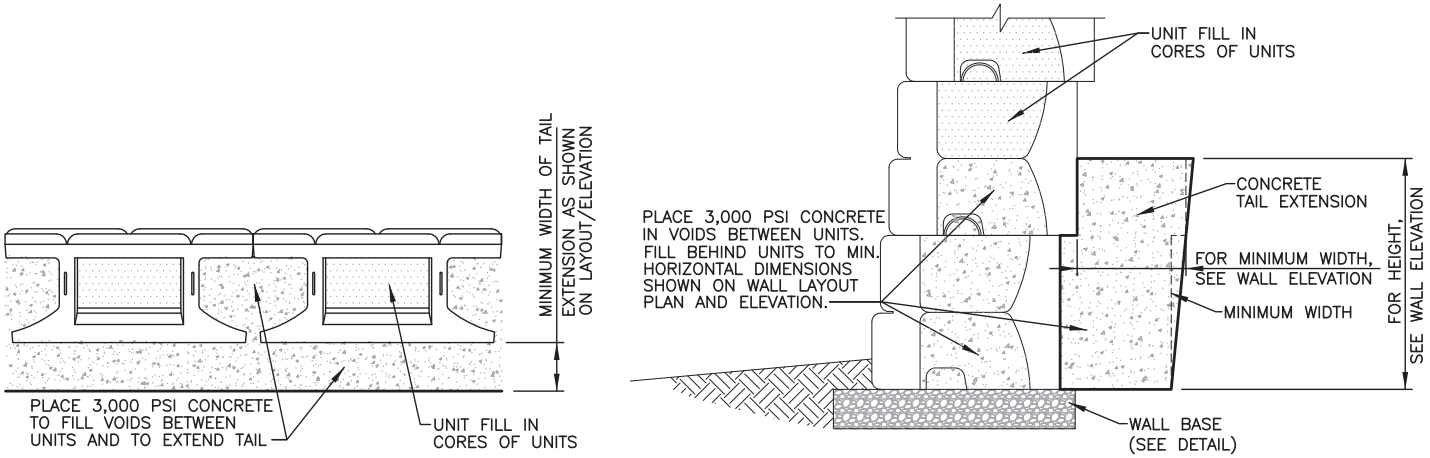

24SF CONCRETE TAIL EXTENSION DETAIL (CAST–IN–PLACE)
NOT TO SCALE

Fill all voids between and within the unit with granular unit fill. Unit fill shall consist of a screened crushed aggregate. A minimum of 75% of coarse material shall have 2 or more fractured faces. Wall base material shall meet the following gradation:

Us Standard Sieve Size	Percent Passing
1-1/2”	100
3/4”	50-75
#4	0-10
#8	0-5

If shown on the plans or the shop drawings, provide a geotextile filter for separation from backfill at the tails of the unit. The geotextile shall be a needle punched non-woven fabric with a minimum grab tensile strength of 120 pounds according to ASTM D 4632. If used, the geotextile may cover the entire back face of the unit or may be cut in strips to cover the gaps between tail unit with a minimum of 6 inches of overlap over the concrete tail on both sides.

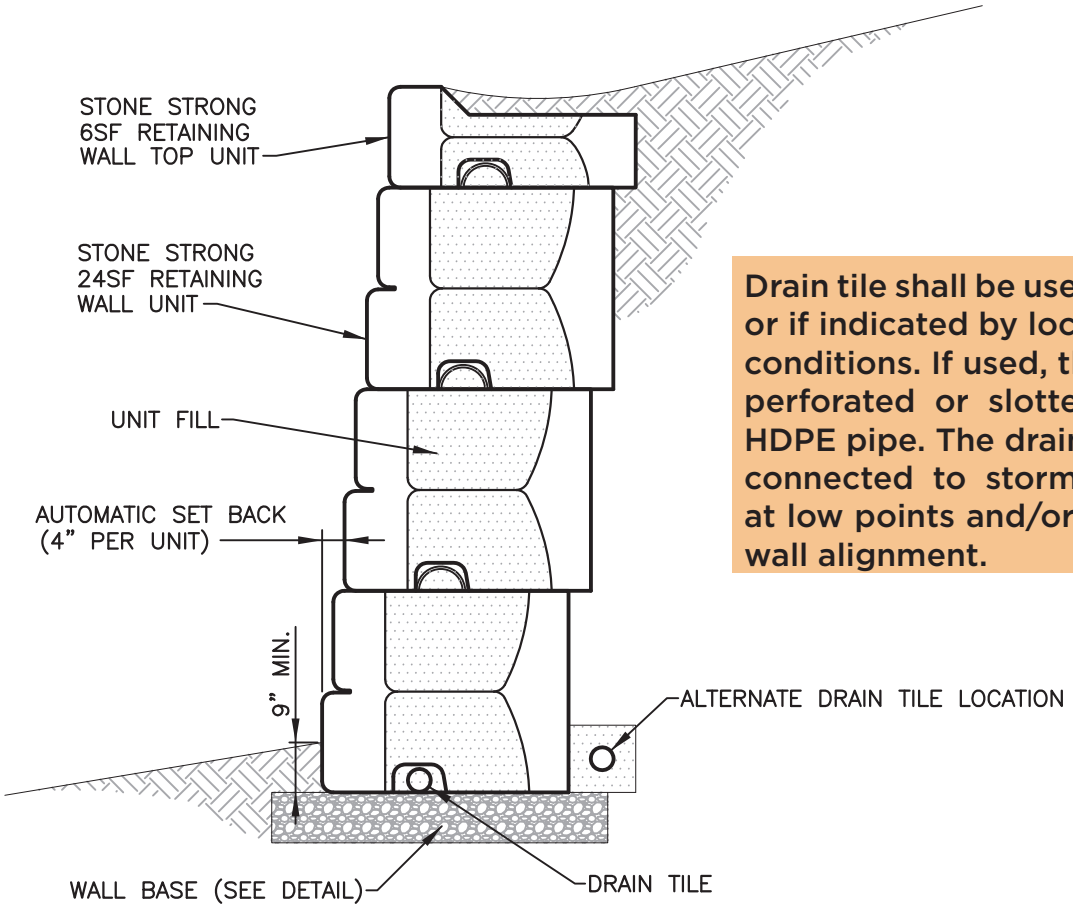

GRAVITY WALL CROSS SECTION
NOT TO SCALE

Drain tile shall be used if shown on the plans or if indicated by local practices and conditions. If used, the drain tile should be perforated or slotted PVC or corrugated HDPE pipe. The drain tile should be connected to storm drains or daylighted at low points and/or periodically along the wall alignment.

Subsequent Courses

Remove all excess aggregate and other materials from the top of the unit before laying up the next course. Place the next course of segmental unit in running bond with the previous course. Place the web recess over the alignment loop from the unit below, and pull the unit forward to contact the loop. This alignment will produce a batter of 2 inches for every 18 inches of vertical wall height. Check the unit for level and alignment.

The layout of radius and corners shall be installed in accordance with the plans or shop drawings. See radius tables included at the end of this manual.

Continue placing successive courses to the elevations shown on the plans. Construct wall in level stages, placing the unit at each course for the entire length of the wall, if possible. Unit fill and backfill should be placed to the level of the top of the facing unit before placing the next course to step the top of the wall.

Provide temporary swales to divert runoff away from wall excavation and away from face during the construction phase.

Install the Stone Strong top unit. Place unit fill and backfill level with the back face of the unit.

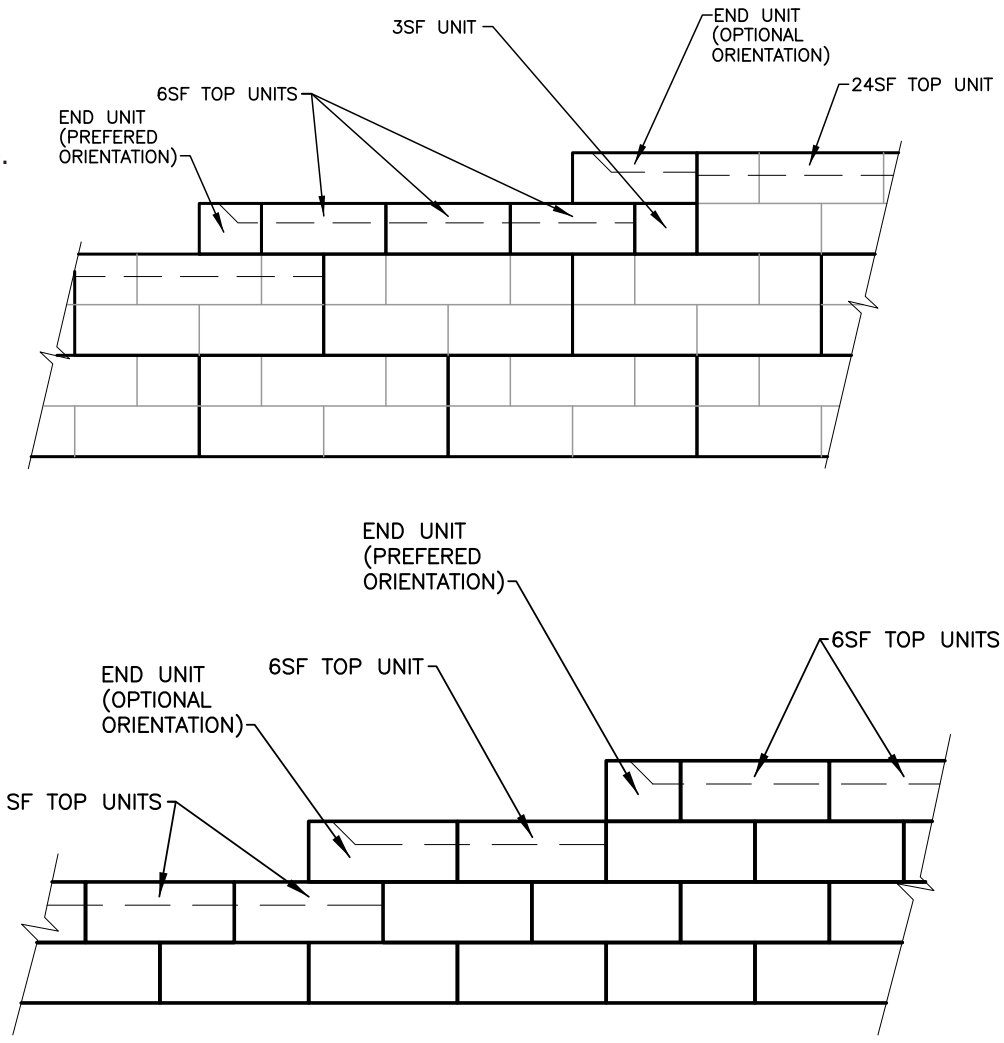

TOP OF WALL STEPS

NOT TO SCALE

BACKFILL PLACEMENT AND COMPACTION

Place backfill behind the unit in maximum loose lifts of 8 inches and compact. Backfill and compact behind the first course before installing other courses. If select granular fill is required, it shall consist of fill sand or other clean aggregate.

Compact all backfill to a minimum of 95 percent of the maximum dry density (ASTM D 698, Standard Proctor). For cohesive soils, the moisture content at the time of compaction should be adjusted to within -3 and +4 percent of optimum. Place backfill in successive lifts until level with the top of the facing unit. Additional unit fill is not required behind the unit, but may be placed for the convenience of the contractor.

All other backfill behind and in front of the wall shall consist of suitable on-site soil or imported borrow approved by the Geotechnical Engineer. Backfill shall consist of sands, silts, or lean clays with a liquid limit less than 45 and a plasticity index less than 20. Fat clay soils, cobbles, and large rock should be avoided unless approved by the Geotechnical Engineer based on local practices. Frozen soils, excessively wet or dry soils, debris, and harmful materials should not be used.

Final grade above and below the retaining wall shall provide for positive drainage and prevent ponding. Protect completed wall from other construction. Do not operate large equipment or store materials above the wall that exceed the design surcharge loads.

Paraweb Strap Installation

Paraweb straps can be cut or continuously wound through the Macbox inserts. Paraweb strap shall extend to the length specified by the site engineer.

Strap is inserted through box as shown (image 1)
Pull strap tight, a pin can be used (image 2) to hold straps taut until buried. Alternatively, weight put on the end of the strap (image 3) is an acceptable way to hold straps taut until buried.
This process is repeated every subsequent half course.

[1]

[4]

Note: cutting Paraweb strap at angle as shown (image 4) helps reduce friction when inserting strap through box.

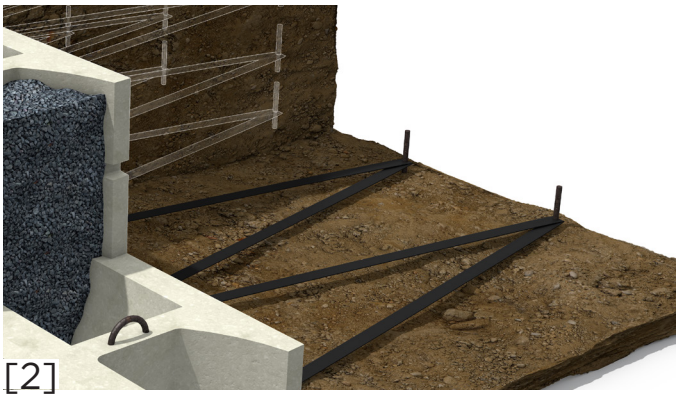
[2]

[3]

Paraweb straps can be driven over with equipment after covering with minimum 3 inches of backfill.

CLEANUP

Remove any damaged or unused Stone Strong unit.

Remove any unit fill or backfill material.

Remove debris caused by wall construction.

TROUBLESHOOTING

First course not level.	Wall base not level. Unit does not meet manufacturing specifications.
Wall leaning in.	Alignment loops not engaged. Unit not level.
Wall leaning out.	Alignment loops not engaged. Unit not level.
Wall has a dip.	Wall base not level. Wall base not properly compacted.
Unit will not stack flat.	Wall base not level. Unit does not meet manufacturing specifications. Excess aggregate or other material on top of unit.

Top of Wall Treatments:
Wall Capping

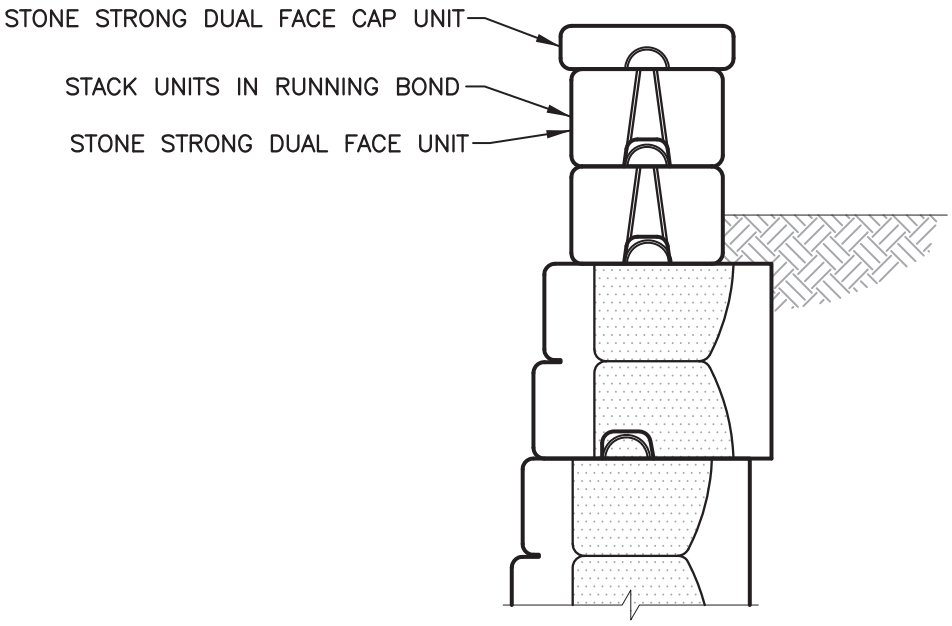

DUAL FACE PARAPET
WALL w/CAP
NOT TO SCALE

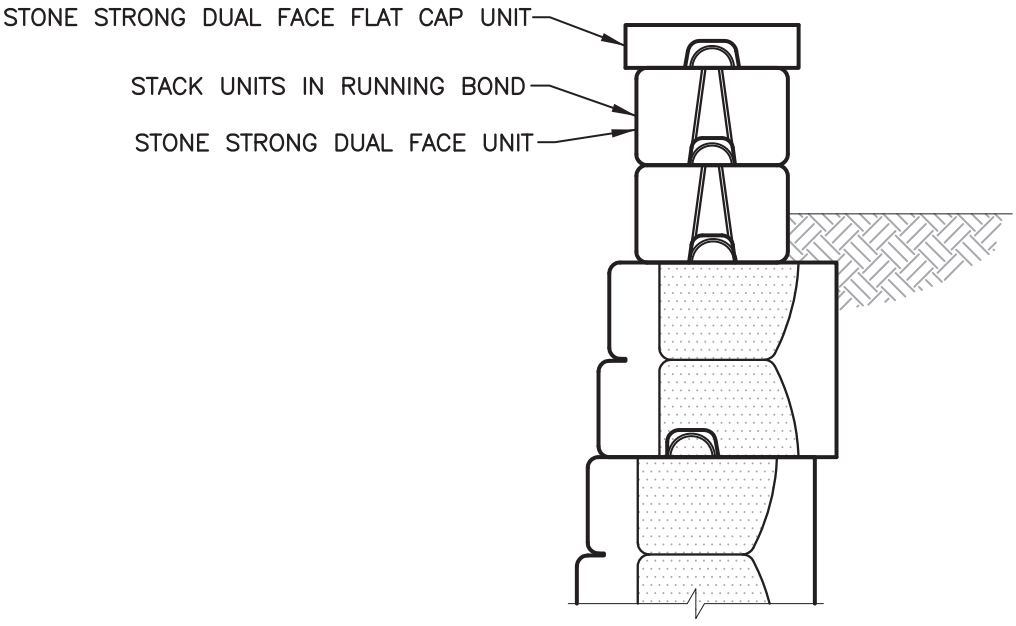

DUAL FACE PARAPET
WALL w/FLAT CAP
NOT TO SCALE

Top of Wall Treatments:
Fencing

Top of Wall Treatments:
Fencing

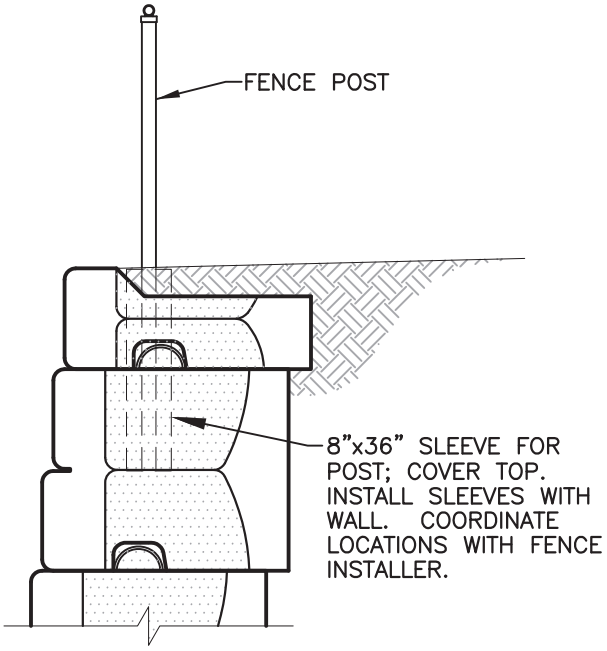

FENCE SLEEVE
NOT TO SCALE

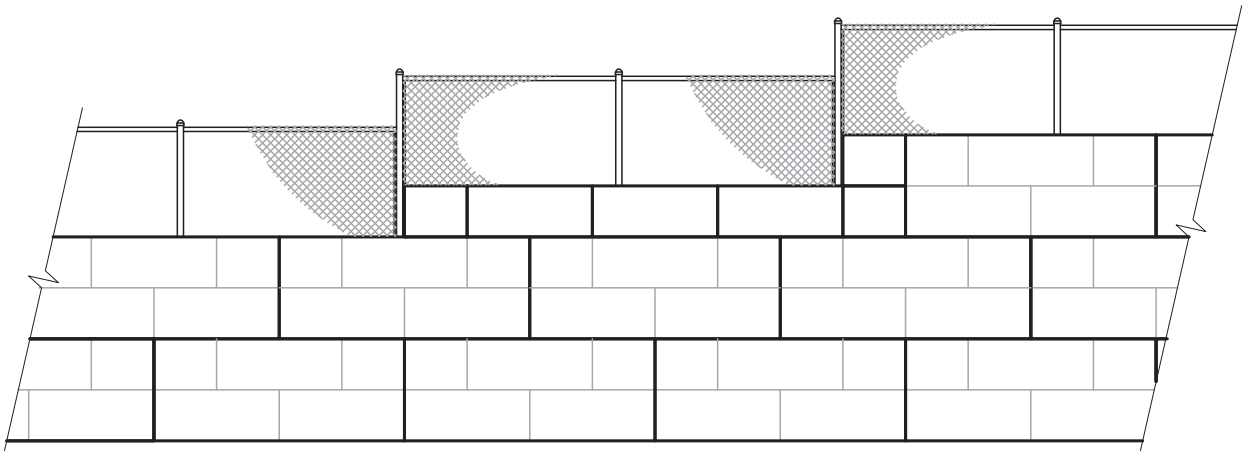

TYPICAL FENCE CONFIGURATION

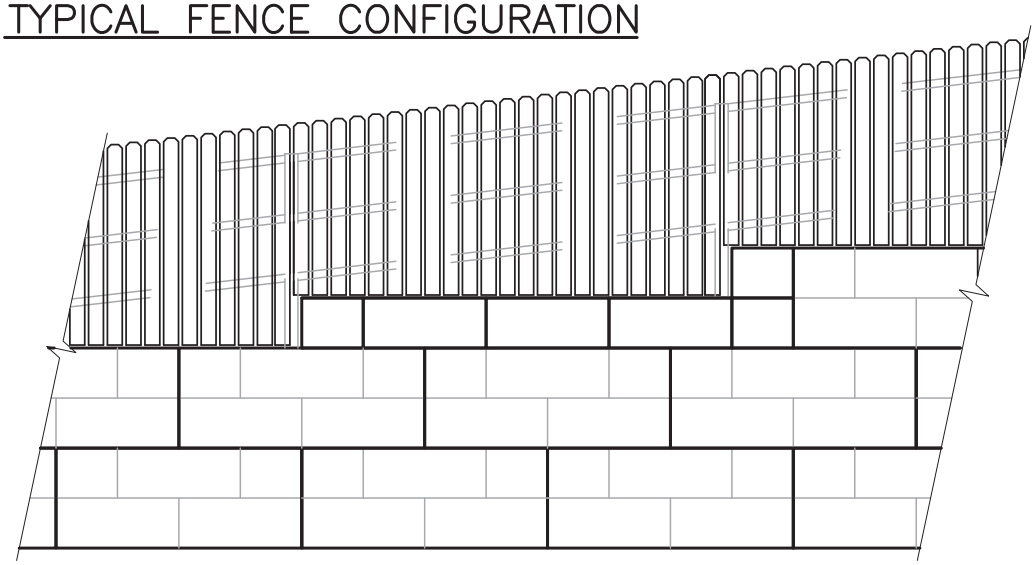

OPTIONAL FENCE CONFIGURATION
NOT TO SCALE

Top of Wall Treatments:
Guardrail

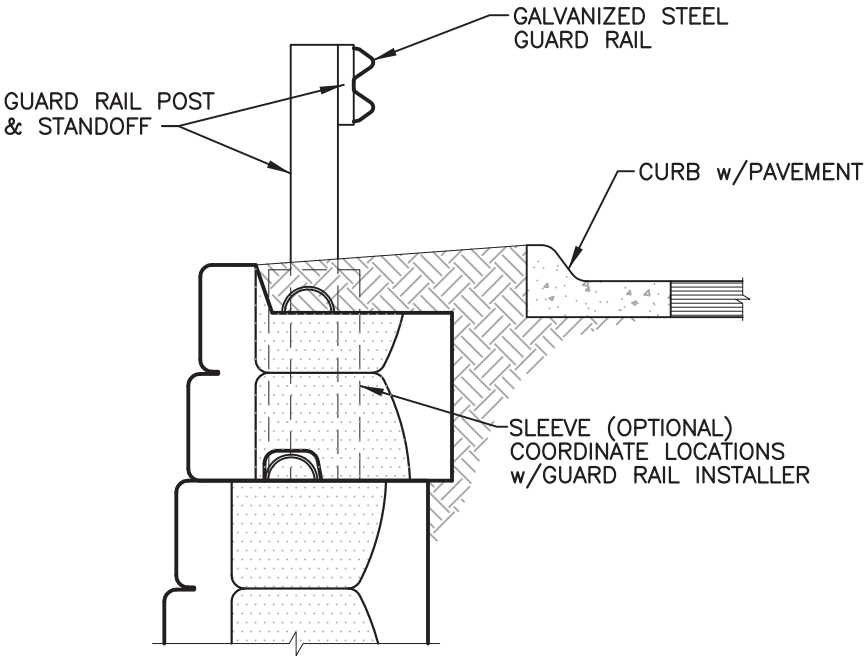

WALL w/GUARD RAIL
NOT TO SCALE

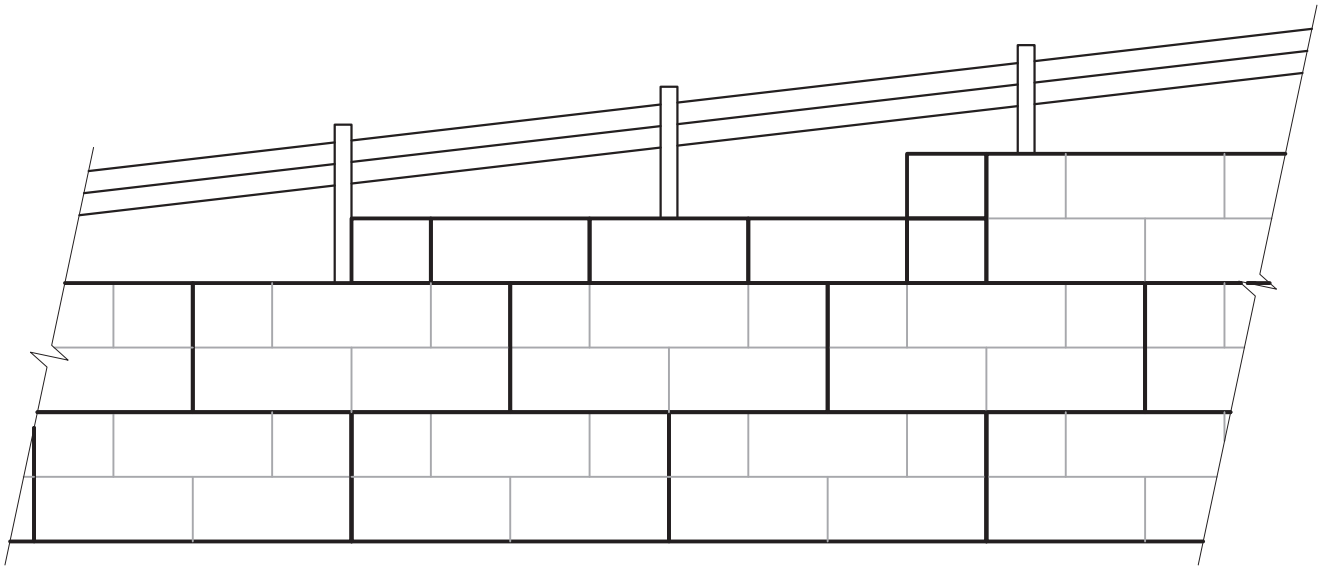

TYPICAL GUARDRAIL CONFIGURATION
NOT TO SCALE

Radius:
24SF

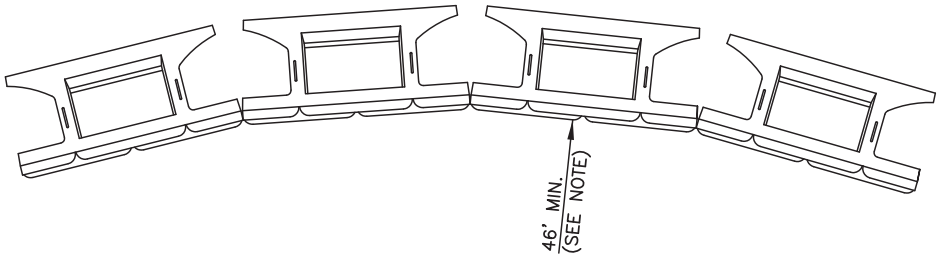

Minimum Concave Radius		
Wall Height (ft)	Total # of Courses	Reqd. Radius at Top Course
6	2	46' 4"
9	3	46' 8"
12	4	47' 0"
15	5	47' 4"
18	6	47' 8"
21	7	48' 0"
24	8	48' 4"

NOTE:
MINIMUM RADIUS OCCURS AT LOWEST COURSE.
RADIUS INCREASES 4" PER COURSE ABOVE,
AS SHOWN ON TABLE.

MINIMUM CONCAVE RADIUS–24SF UNITS
NOT TO SCALE

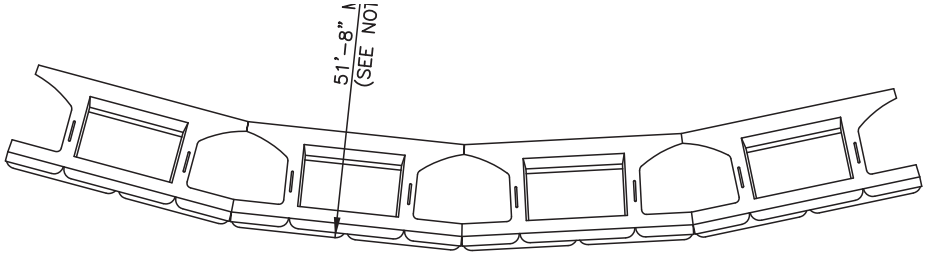

Minimum Convex Radius		
Wall Height (ft)	Total # of Courses	Reqd. Radius at First Course
6	2	52' 0"
9	3	52' 4"
12	4	52' 8"
15	5	53' 0"
18	6	53' 4"
21	7	53' 8"
24	8	54' 0"

NOTE:
MINIMUM RADIUS OCCURS AT TOP COURSE.
REQUIRED RADIUS INCREASES 4" PER COURSE
BELOW, AS SHOWN ON TABLE.

MINIMUM CONVEX RADIUS–24SF UNITS
NOT TO SCALE

Radius:
6SF

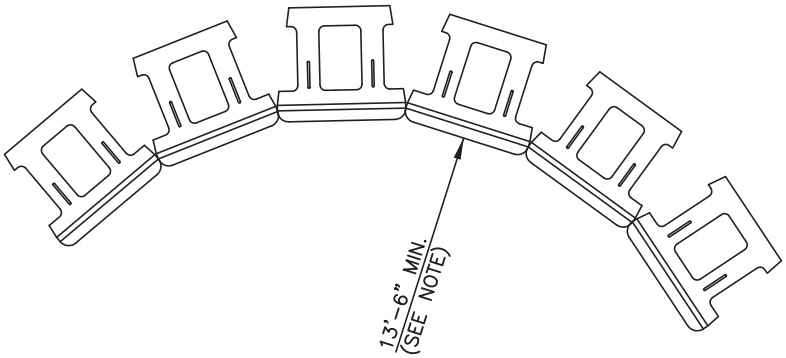

Minimum Concave Radius		
Wall Height (ft)	Total # of Courses	Reqd. Radius at Top Course
3	2	13' 8"
4 1/2	3	13' 10"
6	4	14' 0"
7 1/2	5	14' 2"
9	6	14"4"
10 1/2	7	14' 6"
12	8	14' 8"

NOTE:
MINIMUM RADIUS OCCURS AT LOWEST COURSE.
RADIUS INCREASES 2" PER COURSE
ABOVE, AS SHOWN ON TABLE.

MINIMUM CONCAVE RADIUS–6SF UNITS
NOT TO SCALE

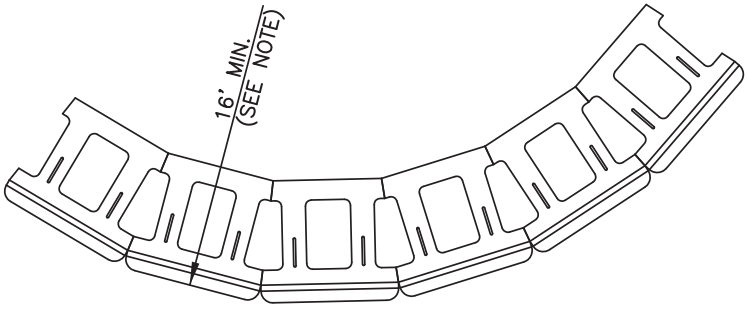

Minimum Convex Radius		
Wall Height (ft)	Total # of Courses	Reqd. Radius at First Course
3	2	16' 2"
4 1/2	3	16' 4"
6	4	16' 6"
7 1/2	5	16' 8"
9	6	16' 10"
10 1/2	7	17' 0"
12	8	17' 2"

NOTE:
NOTE: MINIMUM RADIUS OCCURS AT TOP COURSE.
REQUIRED RADIUS INCREASES 2" PER COURSE
BELOW, AS SHOWN ON TABLE.

MINIMUM CONVEX RADIUS–6SF UNITS
NOT TO SCALE

Radius:
6-28

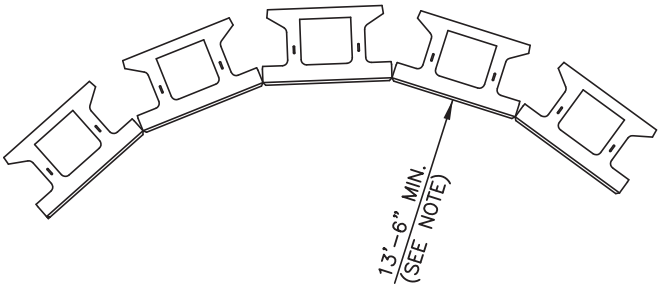

Minimum Concave Radius		
Wall Height (ft)	Total # of Courses	Reqd. Radius at Top Course
3	2	13' 8"
4 1/2	3	13' 10"
6	4	14' 0"
7 1/2	5	14' 2"
9	6	14"4"
10 1/2	7	14' 6"
12	8	14' 8"

NOTE:
MINIMUM RADIUS OCCURS AT LOWEST COURSE.
RADIUS INCREASES 2" PER COURSE
ABOVE, AS SHOWN ON TABLE.

MINIMUM CONCAVE RADIUS–6–28 UNITS
NOT TO SCALE

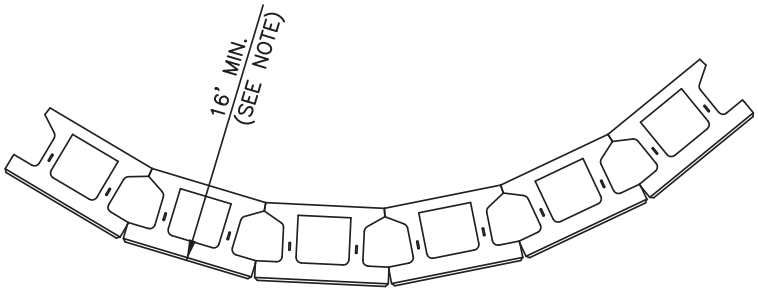

Minimum Convex Radius		
Wall Height (ft)	Total # of Courses	Reqd. Radius at First Course
3	2	16' 2"
4 1/2	3	16' 4"
6	4	16' 6"
7 1/2	5	16' 8"
9	6	16' 10"
10 1/2	7	17' 0"
12	8	17' 2"

NOTE:
NOTE: MINIMUM RADIUS OCCURS AT TOP COURSE.
REQUIRED RADIUS INCREASES 2" PER COURSE
BELOW, AS SHOWN ON TABLE.

MINIMUM CONVEX RADIUS–6–28 UNITS
NOT TO SCALE

STONE STRONG SYSTEMS®

STONE STRONG, LLC
13460 Chandler Road, Suite 100
Omaha, Nebraska 68138

Toll-Free: 1-877-501-5652
Phone: 402-973-1292

www.stonestrong.com

info@stonestrong.com

Issue Date: 7/1/2020

© 2020 Stone Strong, LLC

3.1.3 FACING UNIT INSTALLATION

No attachments

© Stone Strong Systems

3.1.4 FACING ON CURVED SECTIONS & CORNERS

Minimum Radius Details
Corner Details

© Stone Strong Systems

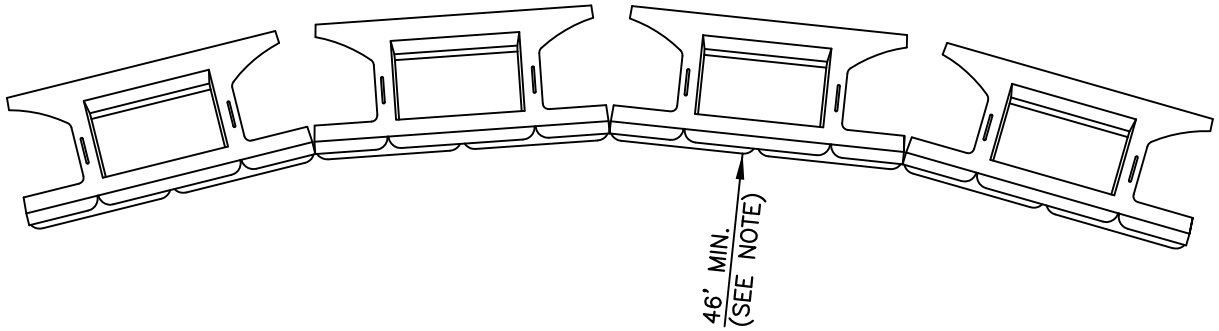

Minimum Concave Radius		
Wall Height (ft)	Total # of Courses	Reqd. Radius at Top Course
6	2	46' 4"
9	3	46' 8"
12	4	47' 0"
15	5	47' 4"
18	6	47' 8"
21	7	48' 0"
24	8	48' 4"

NOTE:
MINIMUM RADIUS OCCURS AT LOWEST COURSE.
RADIUS INCREASES 4" PER COURSE ABOVE,
AS SHOWN ON TABLE.

MINIMUM CONCAVE RADIUS–24SF UNITS

NOT TO SCALE

DISCLAIMER:
These typical details are preliminary and conceptual in nature. They are provided for general information purposes only. Anyone making use of these details and related information does so at their own risk and assumes all liability for such use. Site specific design should be performed by a licensed Professional Engineer based on actual site conditions, materials, and local practices.

Stone Strong LLC retains al common law, statutory, and other reserved rights to these drawings including the copyright. Limited license is granted to copy, reproduce, or modify the details to prepare construction drawings for Stone Strong retaining walls. Stone Strong LLC makes no warranties, either expressed or implied, of merchantability or fitness for any particular purpose, and accepts no responsibility for the accuracy, suitability, or completeness of information contained herein.

STONE STRONG SYSTEMS®

www.stonestrong.com

PROJECT

TYPICAL DETAILS
STONE STRONG SYSTEMS

DATE: 2/10/16 | FILE: 11_24sf.RadMin.Conc

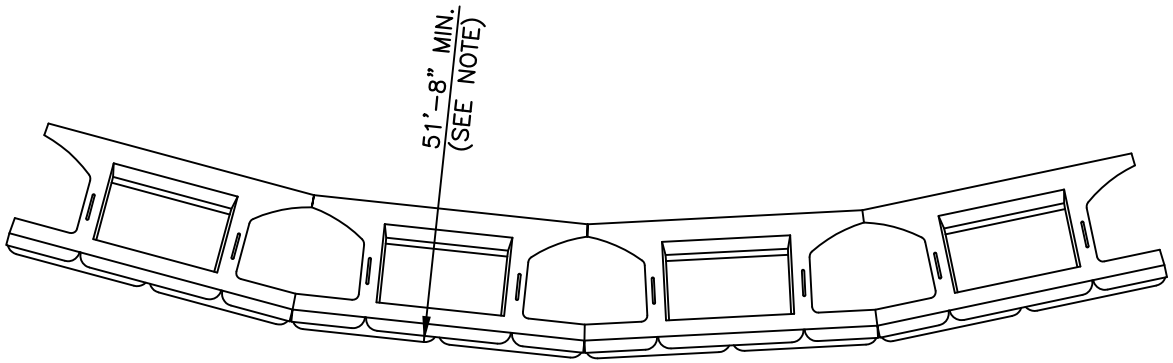

Minimum Convex Radius		
Wall Height (ft)	**Total # of Courses**	**Reqd. Radius at First Course**
6	2	52' 0"
9	3	52' 4"
12	4	52' 8"
15	5	53' 0"
18	6	53' 4"
21	7	53' 8"
24	8	54' 0"

NOTE:
MINIMUM RADIUS OCCURS AT TOP COURSE.
REQUIRED RADIUS INCREASES 4" PER COURSE BELOW, AS SHOWN ON TABLE.

MINIMUM CONVEX RADIUS–24SF UNITS

NOT TO SCALE

DISCLAIMER:
These typical details are preliminary and conceptual in nature. They are provided for general information purposes only. Anyone making use of these details and related information does so at their own risk and assumes all liability for such use. Site specific design should be performed by a licensed Professional Engineer based on actual site conditions, materials, and local practices.

Stone Strong LLC retains al common law, statutory, and other reserved rights to these drawings including the copyright. Limited license is granted to copy, reproduce, or modify the details to prepare construction drawings for Stone Strong retaining walls. Stone Strong LLC makes no warranties, either expressed or implied, of merchantability or fitness for any particular purpose, and accepts no responsibility for the accuracy, suitability, or completeness of information contained herein.

STONE STRONG SYSTEMS®

www.stonestrong.com

PROJECT

TYPICAL DETAILS
STONE STRONG SYSTEMS

DATE: 2/10/16 | FILE: 12_24sf.RadMin.Conve

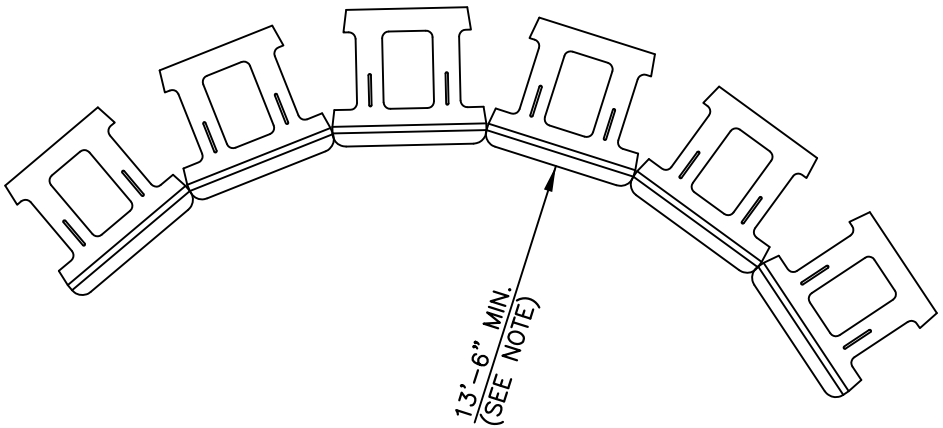

Minimum Concave Radius		
Wall Height (ft)	**Total # of Courses**	**Reqd. Radius at Top Course**
3	2	13' 8"
4 1/2	3	13' 10"
6	4	14' 0"
7 1/2	5	14' 2"
9	6	14"4"
10 1/2	7	14' 6"
12	8	14' 8"

NOTE:
MINIMUM RADIUS OCCURS AT LOWEST COURSE.
RADIUS INCREASES 2" PER COURSE
ABOVE, AS SHOWN ON TABLE.

MINIMUM CONCAVE RADIUS–6SF UNITS

NOT TO SCALE

DISCLAIMER:
These typical details are preliminary and conceptual in nature. They are provided for general information purposes only. Anyone making use of these details and related information does so at their own risk and assumes all liability for such use. Site specific design should be performed by a licensed Professional Engineer based on actual site conditions, materials, and local practices.

Stone Strong LLC retains al common law, statutory, and other reserved rights to these drawings including the copyright. Limited license is granted to copy, reproduce, or modify the details to prepare construction drawings for Stone Strong retaining walls. Stone Strong LLC makes no warranties, either expressed or implied, of merchantability or fitness for any particular purpose, and accepts no responsibility for the accuracy, suitability, or completeness of information contained herein.

STONE STRONG SYSTEMS®

www.stonestrong.com

PROJECT

TYPICAL DETAILS
STONE STRONG SYSTEMS

DATE: 2/10/16 | FILE: 13_6sf.RadMin.Concav

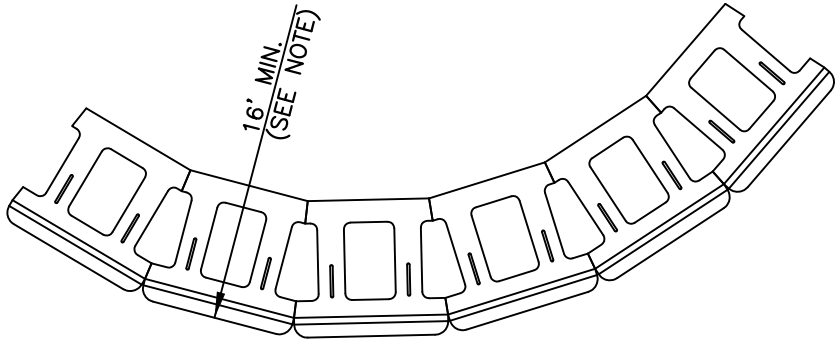

Minimum Convex Radius		
Wall Height (ft)	**Total # of Courses**	**Reqd. Radius at First Course**
3	2	16' 2"
4 1/2	3	16' 4"
6	4	16' 6"
7 1/2	5	16' 8"
9	6	16' 10"
10 1/2	7	17' 0"
12	8	17' 2"

NOTE:
NOTE: MINIMUM RADIUS OCCURS AT TOP COURSE. REQUIRED RADIUS INCREASES 2" PER COURSE BELOW, AS SHOWN ON TABLE.

MINIMUM CONVEX RADIUS–6SF UNITS

NOT TO SCALE

DISCLAIMER:
These typical details are preliminary and conceptual in nature. They are provided for general information purposes only. Anyone making use of these details and related information does so at their own risk and assumes all liability for such use. Site specific design should be performed by a licensed Professional Engineer based on actual site conditions, materials, and local practices.

Stone Strong LLC retains al common law, statutory, and other reserved rights to these drawings including the copyright. Limited license is granted to copy, reproduce, or modify the details to prepare construction drawings for Stone Strong retaining walls. Stone Strong LLC makes no warranties, either expressed or implied, of merchantability or fitness for any particular purpose, and accepts no responsibility for the accuracy, suitability, or completeness of information contained herein.

STONE STRONG SYSTEMS®

www.stonestrong.com

PROJECT

TYPICAL DETAILS
STONE STRONG SYSTEMS

DATE: 2/10/16 | FILE: 14_6sf.RadMin.Convex

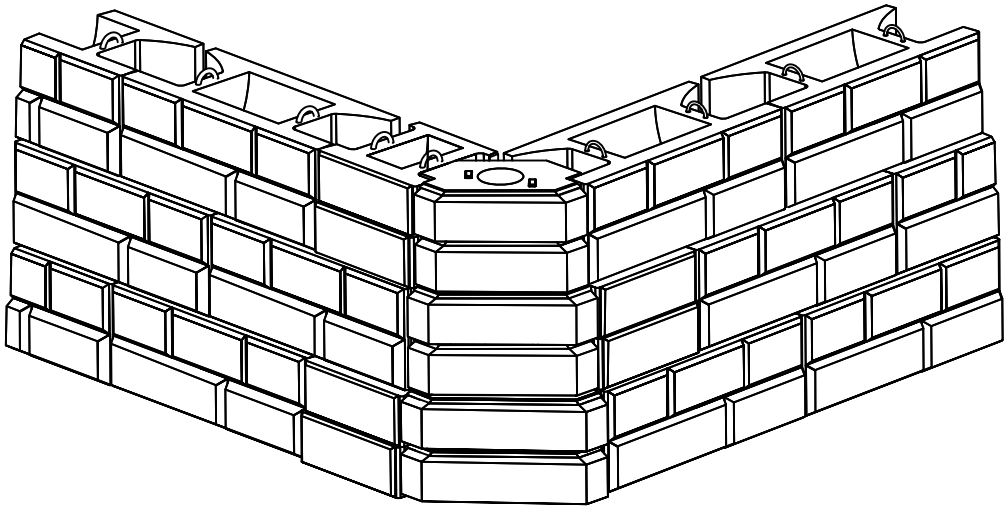

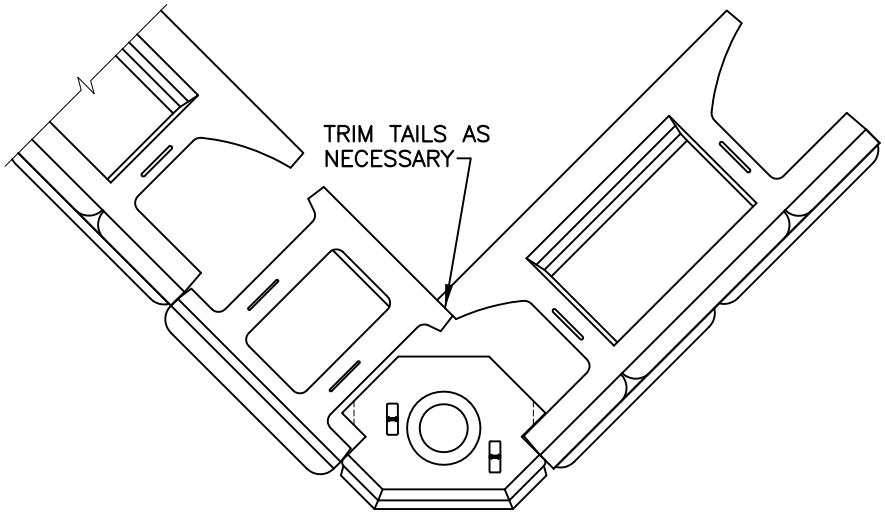

NOTE:
CORNER BLOCK SIZE CHANGES
EACH 3 FEET VERTICALLY

STONE STRONG OUTSIDE CORNER BLOCK ASSEMBLY

NOT TO SCALE

DISCLAIMER:
These typical details are preliminary and conceptual in nature. They are provided for general information purposes only. Anyone making use of these details and related information does so at their own risk and assumes all liability for such use. Site specific design should be performed by a licensed Professional Engineer based on actual site conditions, materials, and local practices.

Stone Strong LLC retains al common law, statutory, and other reserved rights to these drawings including the copyright. Limited license is granted to copy, reproduce, or modify the details to prepare construction drawings for Stone Strong retaining walls. Stone Strong LLC makes no warranties, either expressed or implied, of merchantability or fitness for any particular purpose, and accepts no responsibility for the accuracy, suitability, or completeness of information contained herein.

STONE STRONG SYSTEMS®

www.stonestrong.com

PROJECT

CORNER DETAILS
STONE STRONG SYSTEMS

993

DATE: 6/29/18 | FILE: 01_Corner Outside

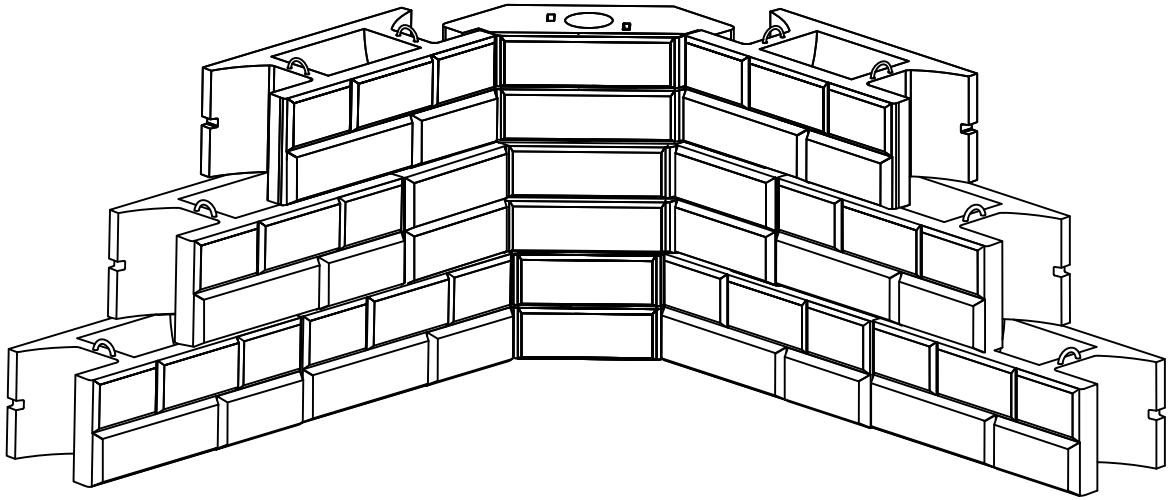

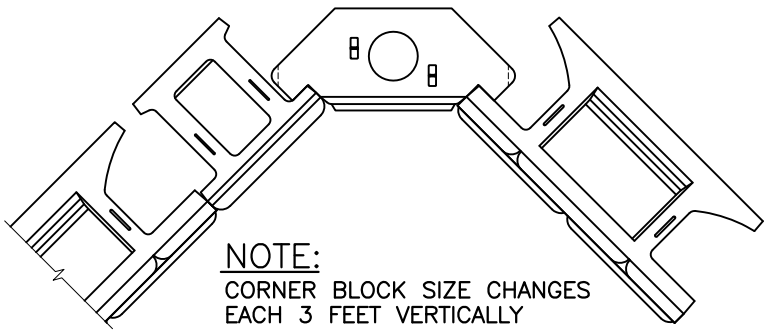

NOTE:
CORNER BLOCK SIZE CHANGES
EACH 3 FEET VERTICALLY

STONE STRONG INSIDE CORNER BLOCK ASSEMBLY

NOT TO SCALE

DISCLAIMER:
These typical details are preliminary and conceptual in nature. They are provided for general information purposes only. Anyone making use of these details and related information does so at their own risk and assumes all liability for such use. Site specific design should be performed by a licensed Professional Engineer based on actual site conditions, materials, and local practices.

Stone Strong LLC retains al common law, statutory, and other reserved rights to these drawings including the copyright. Limited license is granted to copy, reproduce, or modify the details to prepare construction drawings for Stone Strong retaining walls. Stone Strong LLC makes no warranties, either expressed or implied, of merchantability or fitness for any particular purpose, and accepts no responsibility for the accuracy, suitability, or completeness of information contained herein.

STONE STRONG SYSTEMS®

www.stonestrong.com

PROJECT

CORNER DETAILS
STONE STRONG SYSTEMS

994

DATE: 6/29/18 | FILE: 02_Corner Inside

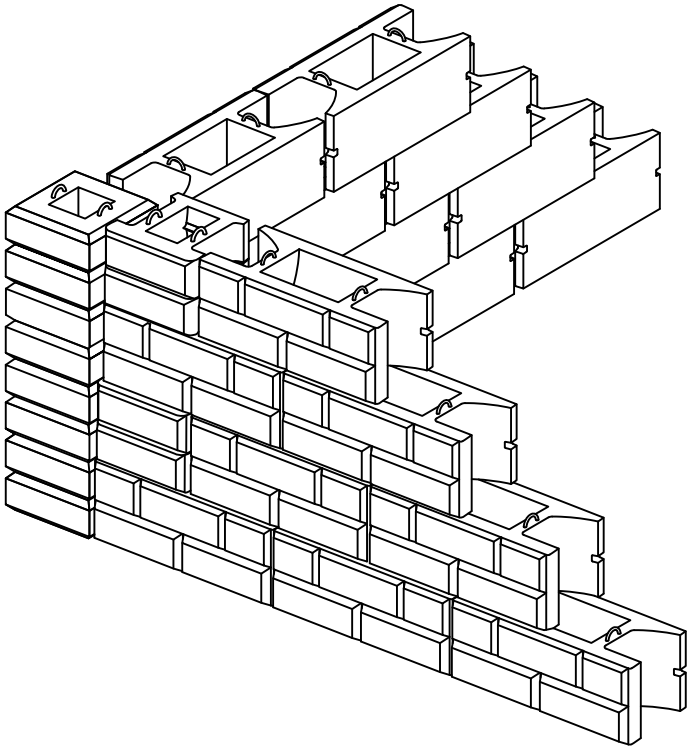

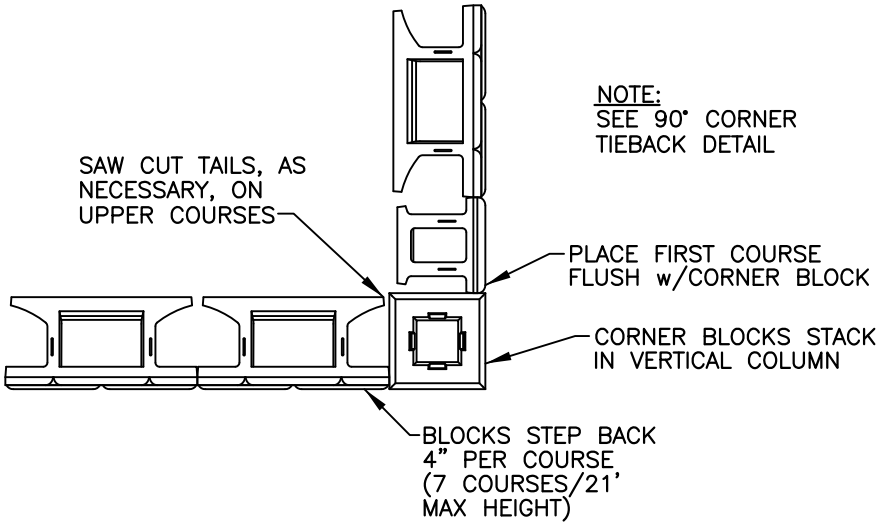

OUTSIDE 90° CORNER

NOT TO SCALE

CHECK ON AVAILABILITY OF ALL UNITS w/ LOCAL PRODUCER/ DEALER. SOME UNITS MAY HAVE LIMITED AVAILABILITY.

DISCLAIMER:

These typical details are preliminary and conceptual in nature. They are provided for general information purposes only. Anyone making use of these details and related information does so at their own risk and assumes all liability for such use. Site specific design should be performed by a licensed Professional Engineer based on actual site conditions, materials, and local practices.

Stone Strong LLC retains al common law, statutory, and other reserved rights to these drawings including the copyright. Limited license is granted to copy, reproduce, or modify the details to prepare construction drawings for Stone Strong retaining walls. Stone Strong LLC makes no warranties, either expressed or implied, of merchantability or fitness for any particular purpose, and accepts no responsibility for the accuracy, suitability, or completeness of information contained herein.

STONE STRONG SYSTEMS®

www.stonestrong.com

PROJECT

CORNER DETAILS

STONE STRONG SYSTEMS

995

DATE: 6/29/18 | FILE: 03_90.OC

NOTE:
RECOMMENDED FOR CORNERS 12' AND TALLER.
INSTALL TIEBACK EVERY 3' VERTICALLY STARTING AT 3' ABOVE THE BASE.

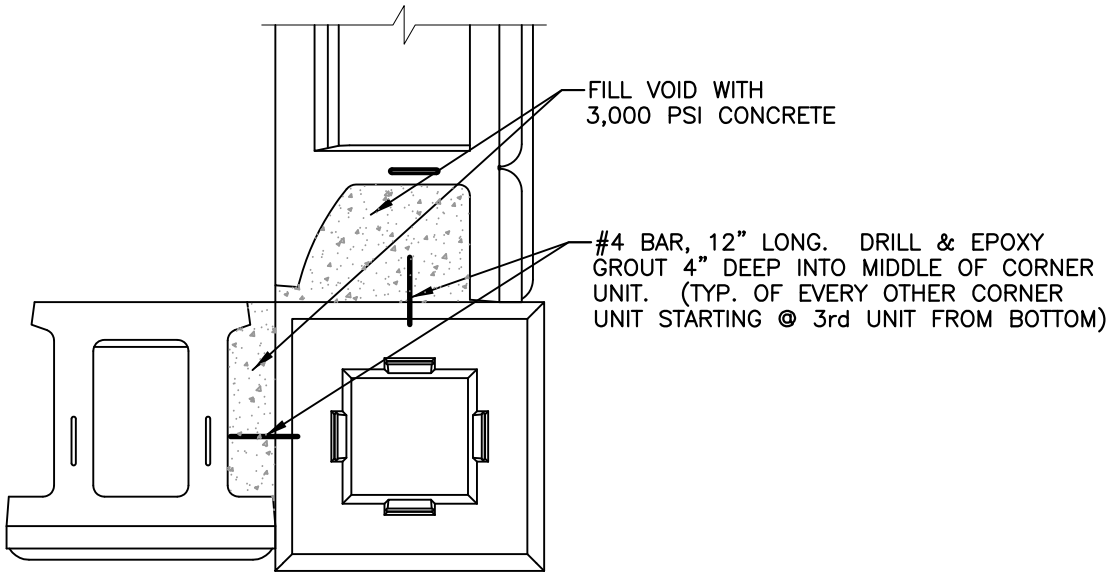

90° CORNER TIEBACK

NOT TO SCALE

CHECK ON AVAILABILITY OF ALL UNITS w/ LOCAL PRODUCER/ DEALER. SOME UNITS MAY HAVE LIMITED AVAILABILITY.

DISCLAIMER:
These typical details are preliminary and conceptual in nature. They are provided for general information purposes only. Anyone making use of these details and related information does so at their own risk and assumes all liability for such use. Site specific design should be performed by a licensed Professional Engineer based on actual site conditions, materials, and local practices.

Stone Strong LLC retains al common law, statutory, and other reserved rights to these drawings including the copyright. Limited license is granted to copy, reproduce, or modify the details to prepare construction drawings for Stone Strong retaining walls. Stone Strong LLC makes no warranties, either expressed or implied, of merchantability or fitness for any particular purpose, and accepts no responsibility for the accuracy, suitability, or completeness of information contained herein.

STONE STRONG SYSTEMS®

www.stonestrong.com

PROJECT

CORNER DETAILS
STONE STRONG SYSTEMS

996

DATE: 6/29/18 | FILE: 04_Tieback.90

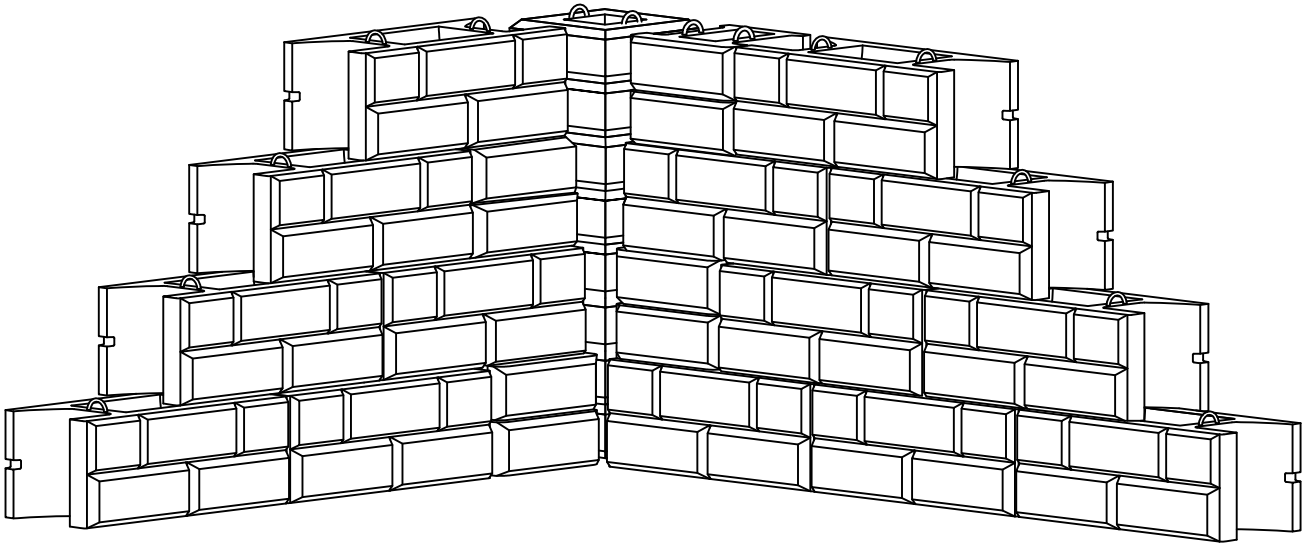

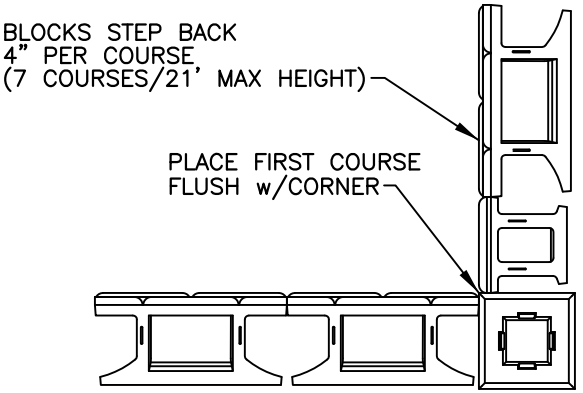

INSIDE 90° CORNER

NOT TO SCALE

CHECK ON AVAILABILITY OF ALL UNITS w/ LOCAL PRODUCER/ DEALER. SOME UNITS MAY HAVE LIMITED AVAILABILITY.

DISCLAIMER:

These typical details are preliminary and conceptual in nature. They are provided for general information purposes only. Anyone making use of these details and related information does so at their own risk and assumes all liability for such use. Site specific design should be performed by a licensed Professional Engineer based on actual site conditions, materials, and local practices.

Stone Strong LLC retains al common law, statutory, and other reserved rights to these drawings including the copyright. Limited license is granted to copy, reproduce, or modify the details to prepare construction drawings for Stone Strong retaining walls. Stone Strong LLC makes no warranties, either expressed or implied, of merchantability or fitness for any particular purpose, and accepts no responsibility for the accuracy, suitability, or completeness of information contained herein.

STONE STRONG SYSTEMS®

www.stonestrong.com

PROJECT

CORNER DETAILS
STONE STRONG SYSTEMS

DATE: 6/29/18 | FILE: 05_90.IC

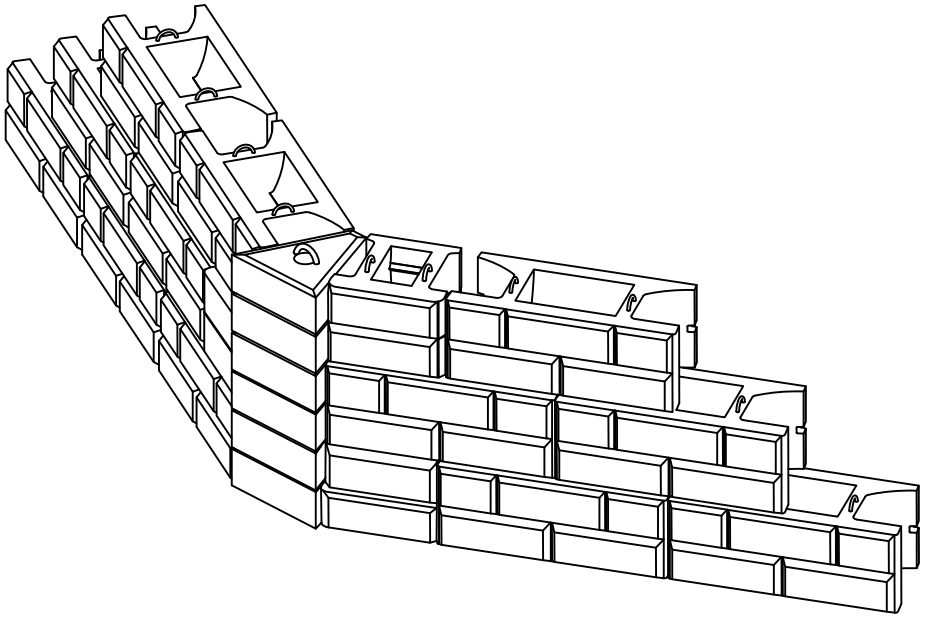

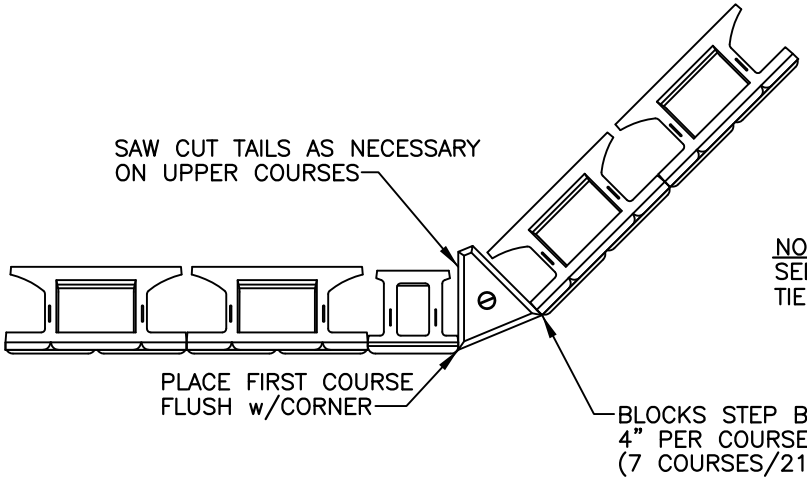

OUTSIDE 45° CORNER

NOT TO SCALE

CHECK ON AVAILABILITY OF ALL UNITS w/ LOCAL PRODUCER/ DEALER. SOME UNITS MAY HAVE LIMITED AVAILABILITY.

DISCLAIMER:

These typical details are preliminary and conceptual in nature. They are provided for general information purposes only. Anyone making use of these details and related information does so at their own risk and assumes all liability for such use. Site specific design should be performed by a licensed Professional Engineer based on actual site conditions, materials, and local practices.

Stone Strong LLC retains al common law, statutory, and other reserved rights to these drawings including the copyright. Limited license is granted to copy, reproduce, or modify the details to prepare construction drawings for Stone Strong retaining walls. Stone Strong LLC makes no warranties, either expressed or implied, of merchantability or fitness for any particular purpose, and accepts no responsibility for the accuracy, suitability, or completeness of information contained herein.

STONE STRONG SYSTEMS®

www.stonestrong.com

PROJECT

CORNER DETAILS
STONE STRONG SYSTEMS

DATE: 6/29/18 | FILE: 08_45.0C

NOTE:
RECOMMENDED FOR CORNERS 12' AND TALLER.
INSTALL TIEBACK EVERY 3' VERTICALLY STARTING AT 3' ABOVE THE BASE.

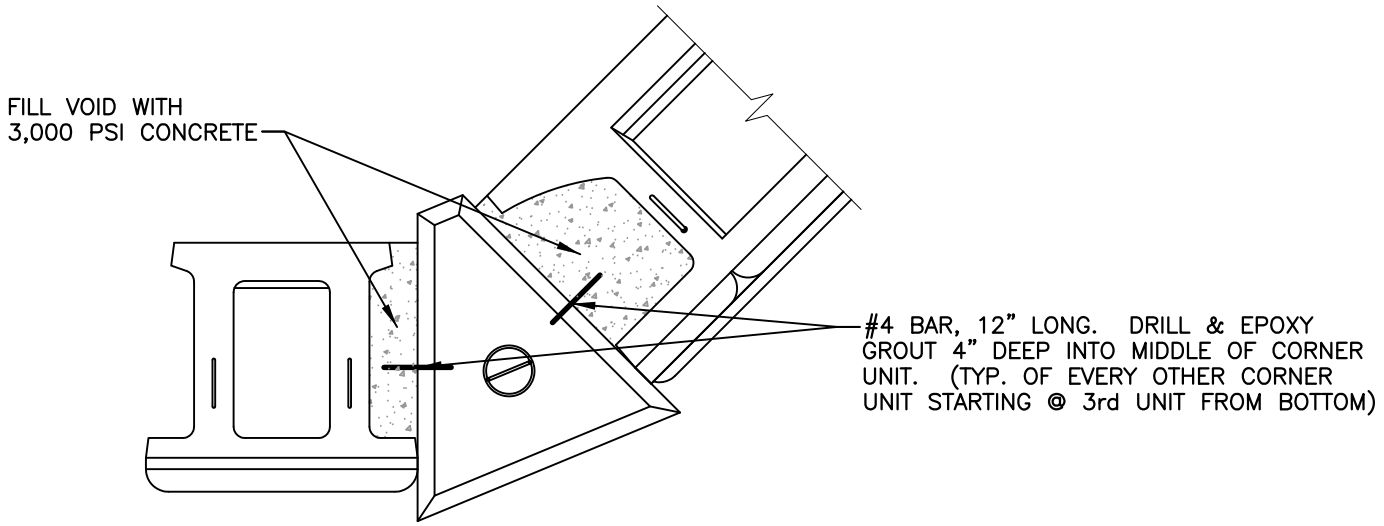

45° CORNER TIEBACK

NOT TO SCALE

CHECK ON AVAILABILITY OF ALL UNITS w/ LOCAL PRODUCER/ DEALER. SOME UNITS MAY HAVE LIMITED AVAILABILITY.

DISCLAIMER:
These typical details are preliminary and conceptual in nature. They are provided for general information purposes only. Anyone making use of these details and related information does so at their own risk and assumes all liability for such use. Site specific design should be performed by a licensed Professional Engineer based on actual site conditions, materials, and local practices.

Stone Strong LLC retains al common law, statutory, and other reserved rights to these drawings including the copyright. Limited license is granted to copy, reproduce, or modify the details to prepare construction drawings for Stone Strong retaining walls. Stone Strong LLC makes no warranties, either expressed or implied, of merchantability or fitness for any particular purpose, and accepts no responsibility for the accuracy, suitability, or completeness of information contained herein.

STONE STRONG SYSTEMS®

www.stonestrong.com

PROJECT

CORNER DETAILS
STONE STRONG SYSTEMS

DATE: 6/29/18 | FILE: 09_Tieback.45

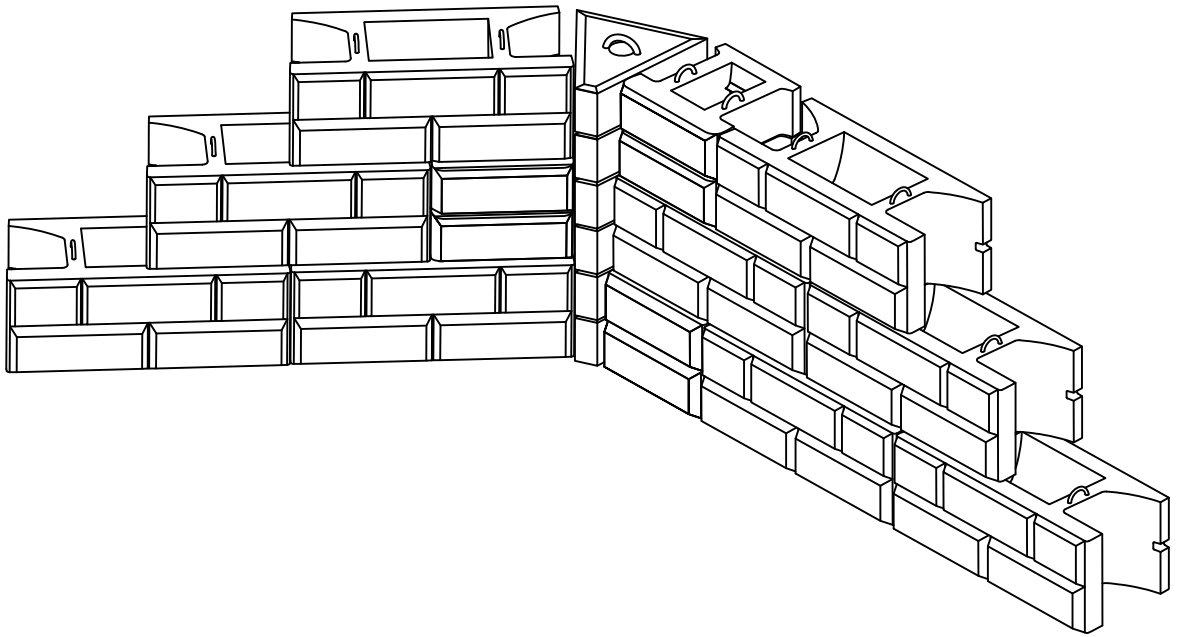

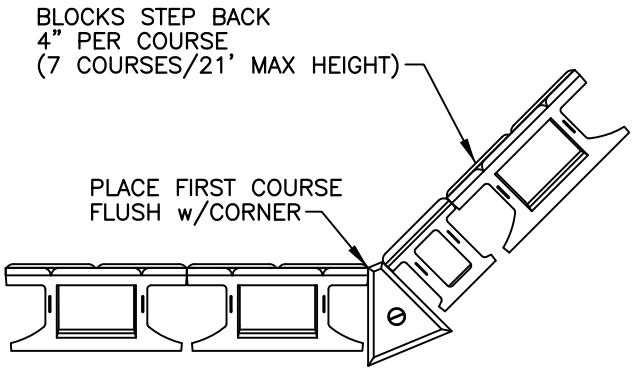

INSIDE 45° CORNER

NOT TO SCALE

CHECK ON AVAILABILITY OF ALL UNITS w/ LOCAL PRODUCER/ DEALER. SOME UNITS MAY HAVE LIMITED AVAILABILITY.

DISCLAIMER:

These typical details are preliminary and conceptual in nature. They are provided for general information purposes only. Anyone making use of these details and related information does so at their own risk and assumes all liability for such use. Site specific design should be performed by a licensed Professional Engineer based on actual site conditions, materials, and local practices.

Stone Strong LLC retains al common law, statutory, and other reserved rights to these drawings including the copyright. Limited license is granted to copy, reproduce, or modify the details to prepare construction drawings for Stone Strong retaining walls. Stone Strong LLC makes no warranties, either expressed or implied, of merchantability or fitness for any particular purpose, and accepts no responsibility for the accuracy, suitability, or completeness of information contained herein.

STONE STRONG SYSTEMS®

www.stonestrong.com

PROJECT

CORNER DETAILS
STONE STRONG SYSTEMS

DATE: 6/29/18 | FILE: 10_45.IC

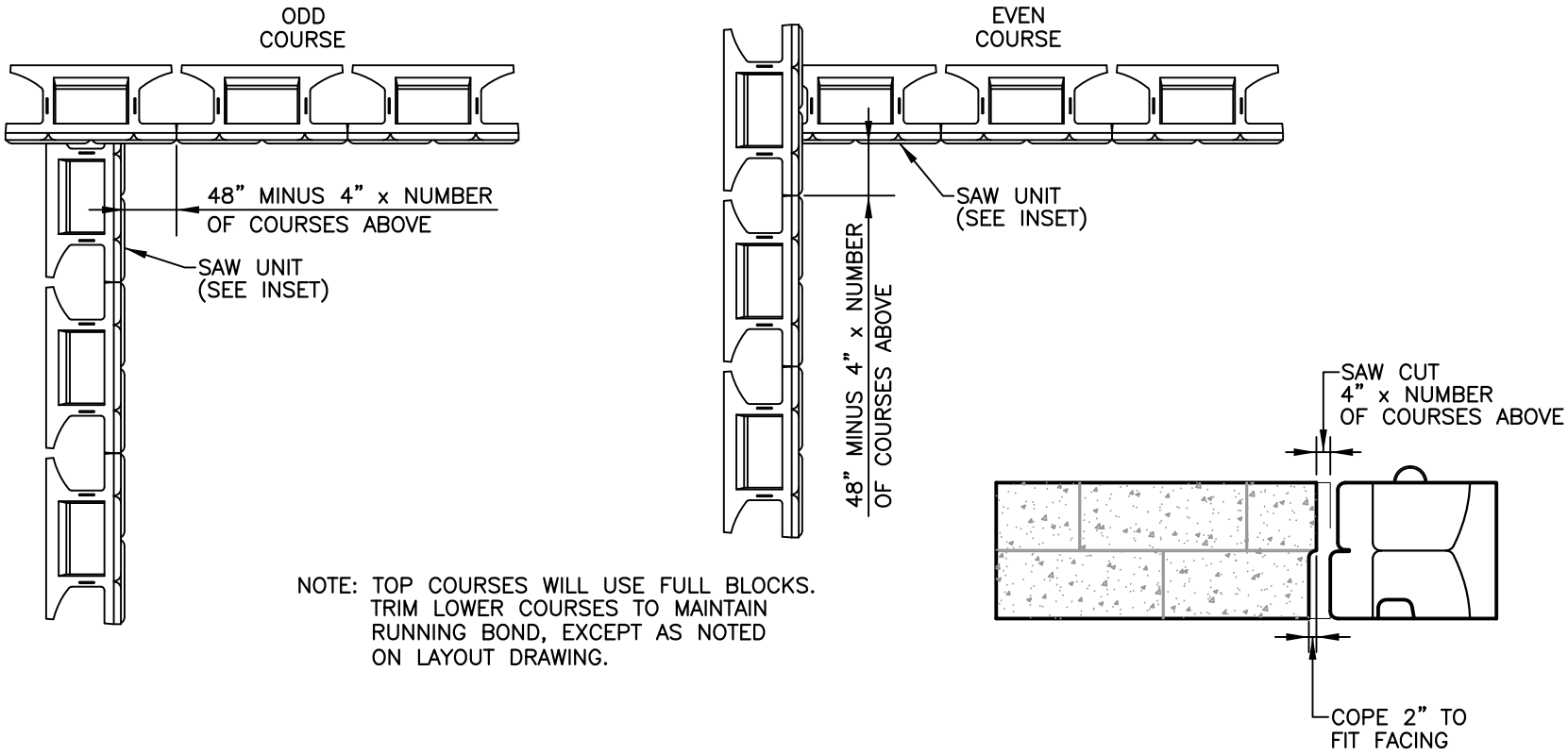

NOTE: TOP COURSES WILL USE FULL BLOCKS. TRIM LOWER COURSES TO MAINTAIN RUNNING BOND, EXCEPT AS NOTED ON LAYOUT DRAWING.

24SF LACED INSIDE CORNER

NOT TO SCALE

DISCLAIMER:

These typical details are preliminary and conceptual in nature. They are provided for general information purposes only. Anyone making use of these details and related information does so at their own risk and assumes all liability for such use. Site specific design should be performed by a licensed Professional Engineer based on actual site conditions, materials, and local practices.

Stone Strong LLC retains al common law, statutory, and other reserved rights to these drawings including the copyright. Limited license is granted to copy, reproduce, or modify the details to prepare construction drawings for Stone Strong retaining walls. Stone Strong LLC makes no warranties, either expressed or implied, of merchantability or fitness for any particular purpose, and accepts no responsibility for the accuracy, suitability, or completeness of information contained herein.

STONE STRONG SYSTEMS®

www.stonestrong.com

PROJECT

CORNER DETAILS
STONE STRONG SYSTEMS

DATE: 6/29/18 | FILE: 11_24sf.LIC

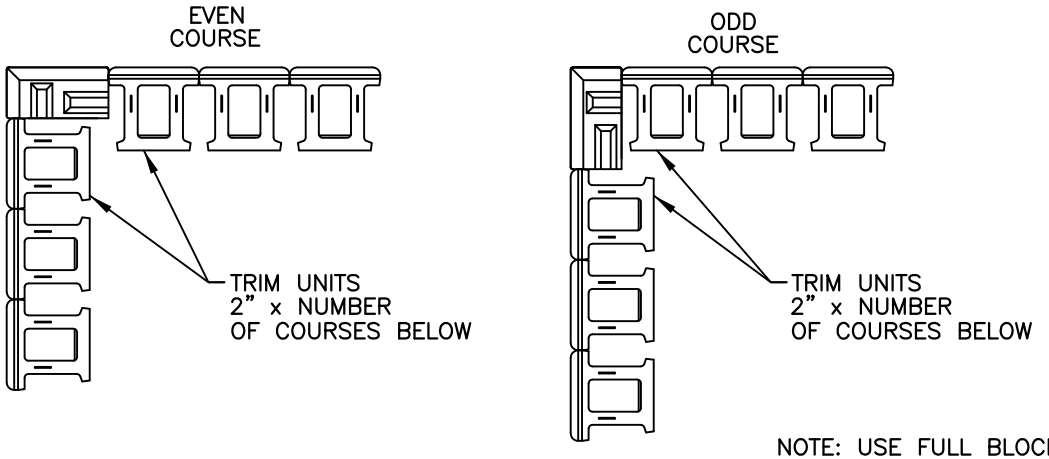

NOTE: USE FULL BLOCKS FIRST COURSE. TRIM SUBSEQUENT COURSES TO MAINTAIN RUNNING BOND, EXCEPT AS NOTED ON LAYOUT DRAWING.

CAST SLEEVE FOR FENCE POST IN TOP CORNER BLOCK.

6SF LACED OUTSIDE CORNER

NOT TO SCALE

DISCLAIMER:

These typical details are preliminary and conceptual in nature. They are provided for general information purposes only. Anyone making use of these details and related information does so at their own risk and assumes all liability for such use. Site specific design should be performed by a licensed Professional Engineer based on actual site conditions, materials, and local practices.

Stone Strong LLC retains al common law, statutory, and other reserved rights to these drawings including the copyright. Limited license is granted to copy, reproduce, or modify the details to prepare construction drawings for Stone Strong retaining walls. Stone Strong LLC makes no warranties, either expressed or implied, of merchantability or fitness for any particular purpose, and accepts no responsibility for the accuracy, suitability, or completeness of information contained herein.

STONE STRONG SYSTEMS®

www.stonestrong.com

PROJECT

CORNER DETAILS
STONE STRONG SYSTEMS

DATE: 6/29/18 | FILE: 12_6sf.LOC

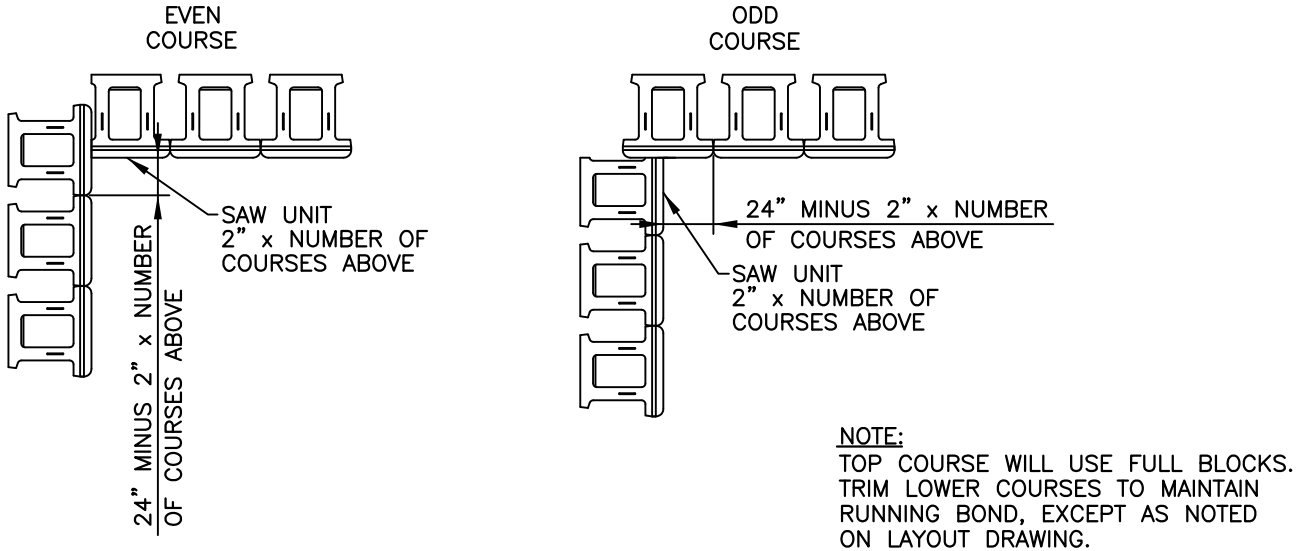

NOTE:
TOP COURSE WILL USE FULL BLOCKS. TRIM LOWER COURSES TO MAINTAIN RUNNING BOND, EXCEPT AS NOTED ON LAYOUT DRAWING.

6SF LACED INSIDE CORNER

NOT TO SCALE

DISCLAIMER:
These typical details are preliminary and conceptual in nature. They are provided for general information purposes only. Anyone making use of these details and related information does so at their own risk and assumes all liability for such use. Site specific design should be performed by a licensed Professional Engineer based on actual site conditions, materials, and local practices.

Stone Strong LLC retains al common law, statutory, and other reserved rights to these drawings including the copyright. Limited license is granted to copy, reproduce, or modify the details to prepare construction drawings for Stone Strong retaining walls. Stone Strong LLC makes no warranties, either expressed or implied, of merchantability or fitness for any particular purpose, and accepts no responsibility for the accuracy, suitability, or completeness of information contained herein.

STONE STRONG SYSTEMS®

www.stonestrong.com

PROJECT

CORNER DETAILS
STONE STRONG SYSTEMS

DATE: 6/29/18 | FILE: 13_6sf.LIC

3.1.5 REINFORCEMENT ON CURVED SECTIONS & CORNERS

Paraweb Layout Details

© Stone Strong Systems

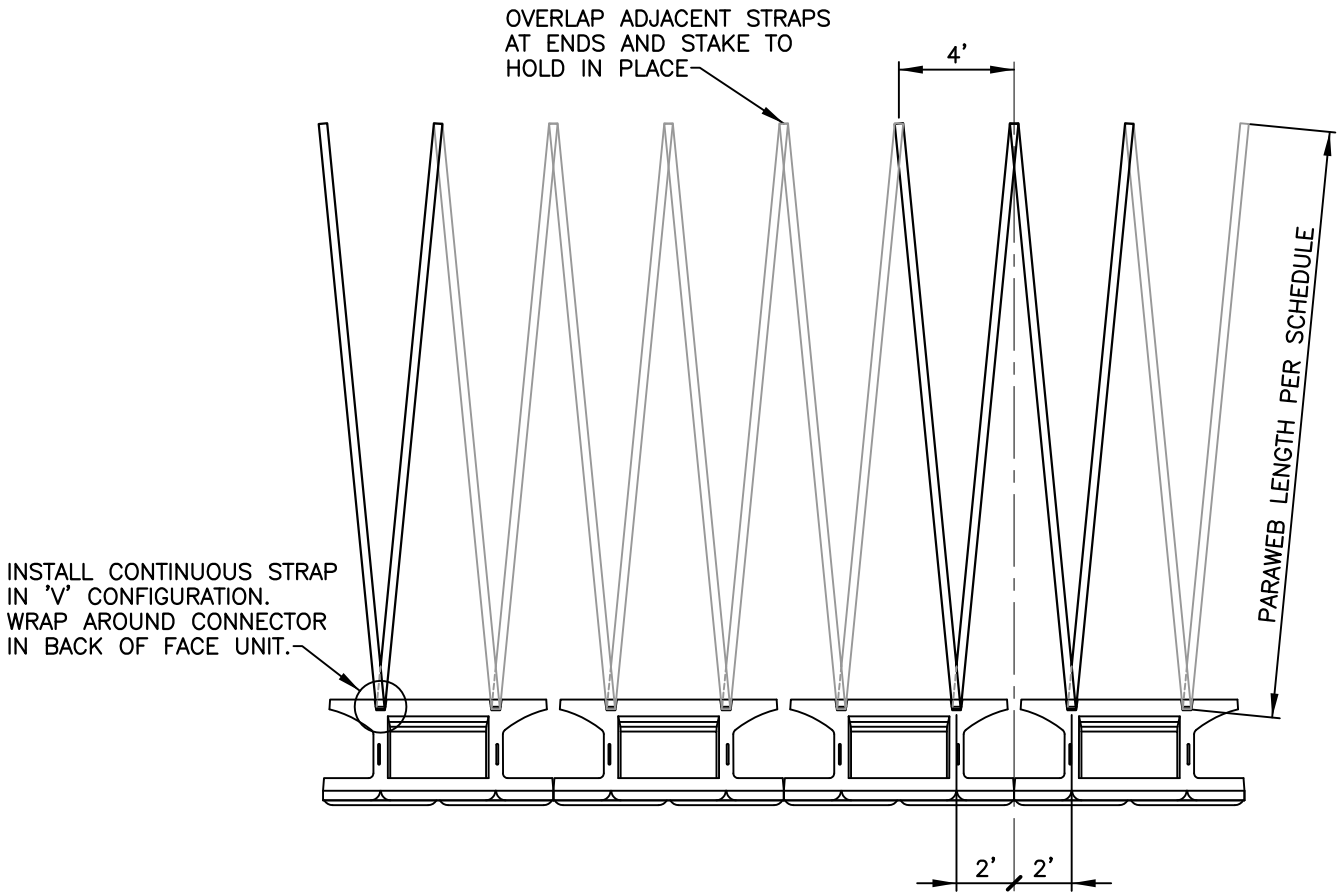

TYPICAL PARAWEB LAYOUT

NOT TO SCALE

DISCLAIMER:

These typical details are preliminary and conceptual in nature. They are provided for general information purposes only. Anyone making use of these details and related information does so at their own risk and assumes all liability for such use. Site specific design should be performed by a licensed Professional Engineer based on actual site conditions, materials, and local practices.

Stone Strong LLC retains al common law, statutory, and other reserved rights to these drawings including the copyright. Limited license is granted to copy, reproduce, or modify the details to prepare construction drawings for Stone Strong retaining walls. Stone Strong LLC makes no warranties, either expressed or implied, of merchantability or fitness for any particular purpose, and accepts no responsibility for the accuracy, suitability, or completeness of information contained herein.

STONE STRONG SYSTEMS®

www.stonestrong.com

PROJECT

TYPICAL DETAILS
STONE STRONG SYSTEMS

DATE: 6/29/18 | FILE: 18_Typical Paraweb

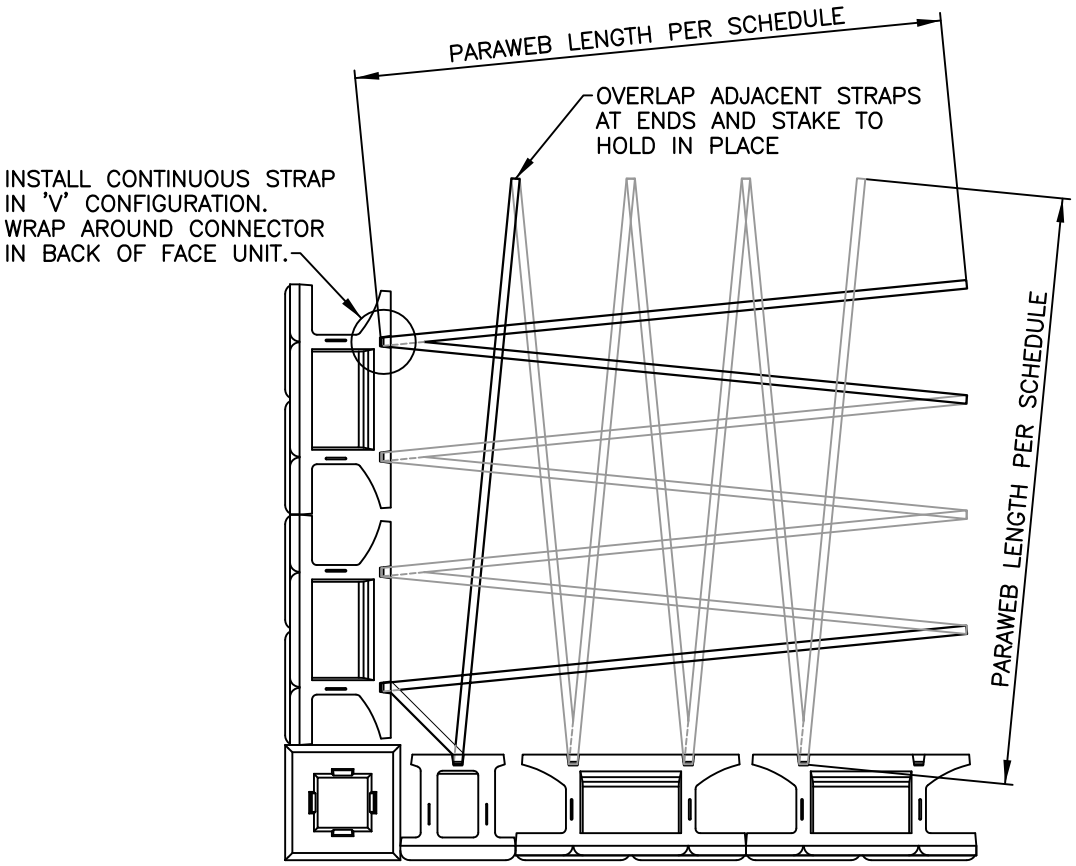

PARAWEB ON OUTSIDE CORNER

NOT TO SCALE

DISCLAIMER:

These typical details are preliminary and conceptual in nature. They are provided for general information purposes only. Anyone making use of these details and related information does so at their own risk and assumes all liability for such use. Site specific design should be performed by a licensed Professional Engineer based on actual site conditions, materials, and local practices.

Stone Strong LLC retains al common law, statutory, and other reserved rights to these drawings including the copyright. Limited license is granted to copy, reproduce, or modify the details to prepare construction drawings for Stone Strong retaining walls. Stone Strong LLC makes no warranties, either expressed or implied, of merchantability or fitness for any particular purpose, and accepts no responsibility for the accuracy, suitability, or completeness of information contained herein.

STONE STRONG SYSTEMS®

www.stonestrong.com

PROJECT

TYPICAL DETAILS
STONE STRONG SYSTEMS

DATE: 6/29/18 | FILE: 21_Paraweb.Outside | 1006

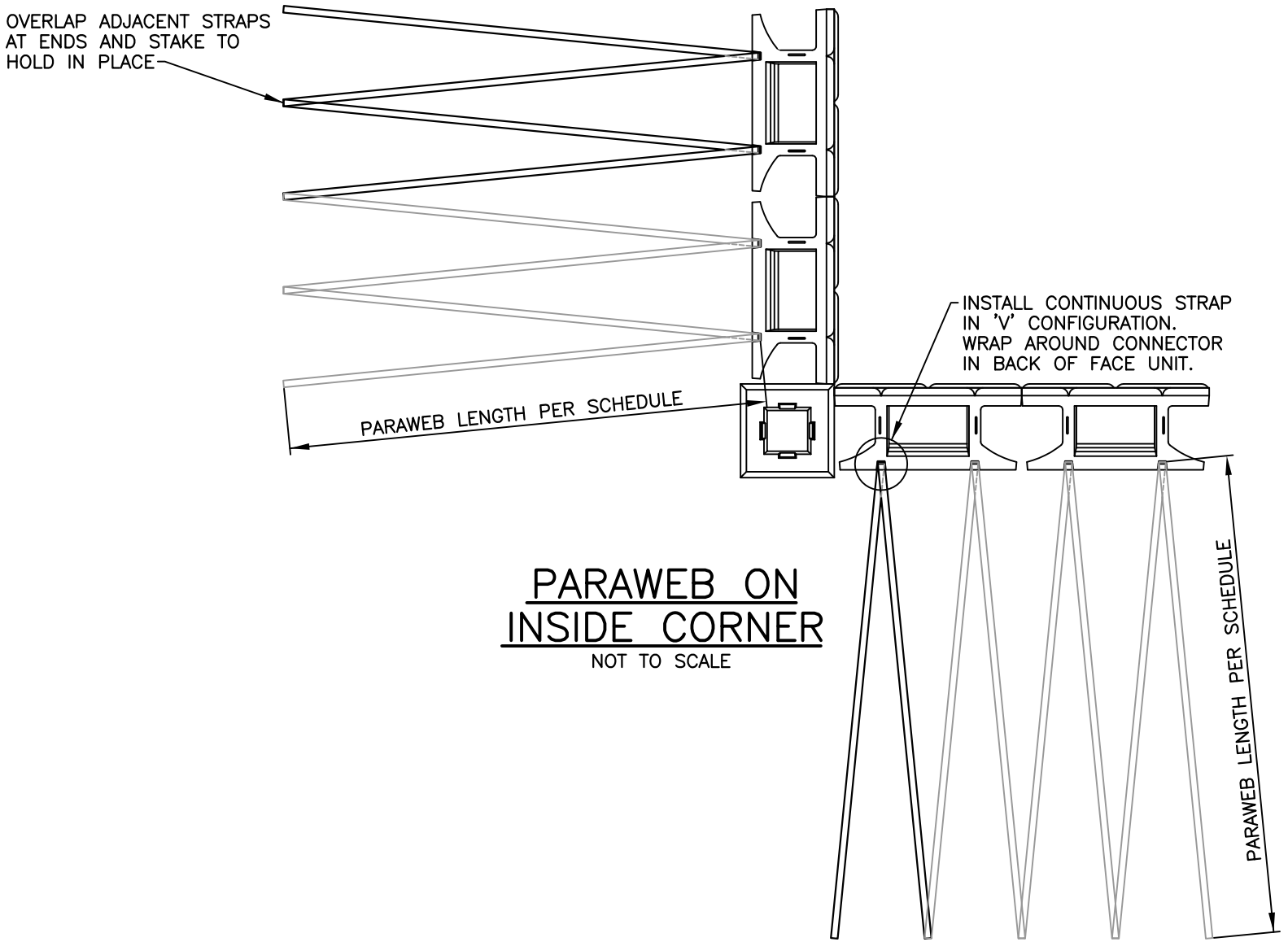

PARAWEB ON INSIDE CORNER

NOT TO SCALE

DISCLAIMER:

These typical details are preliminary and conceptual in nature. They are provided for general information purposes only. Anyone making use of these details and related information does so at their own risk and assumes all liability for such use. Site specific design should be performed by a licensed Professional Engineer based on actual site conditions, materials, and local practices.

Stone Strong LLC retains al common law, statutory, and other reserved rights to these drawings including the copyright. Limited license is granted to copy, reproduce, or modify the details to prepare construction drawings for Stone Strong retaining walls. Stone Strong LLC makes no warranties, either expressed or implied, of merchantability or fitness for any particular purpose, and accepts no responsibility for the accuracy, suitability, or completeness of information contained herein.

STONE STRONG SYSTEMS®

www.stonestrong.com

PROJECT

TYPICAL DETAILS
STONE STRONG SYSTEMS

DATE: 6/29/18 | FILE: 22_Paraweb.Inside C

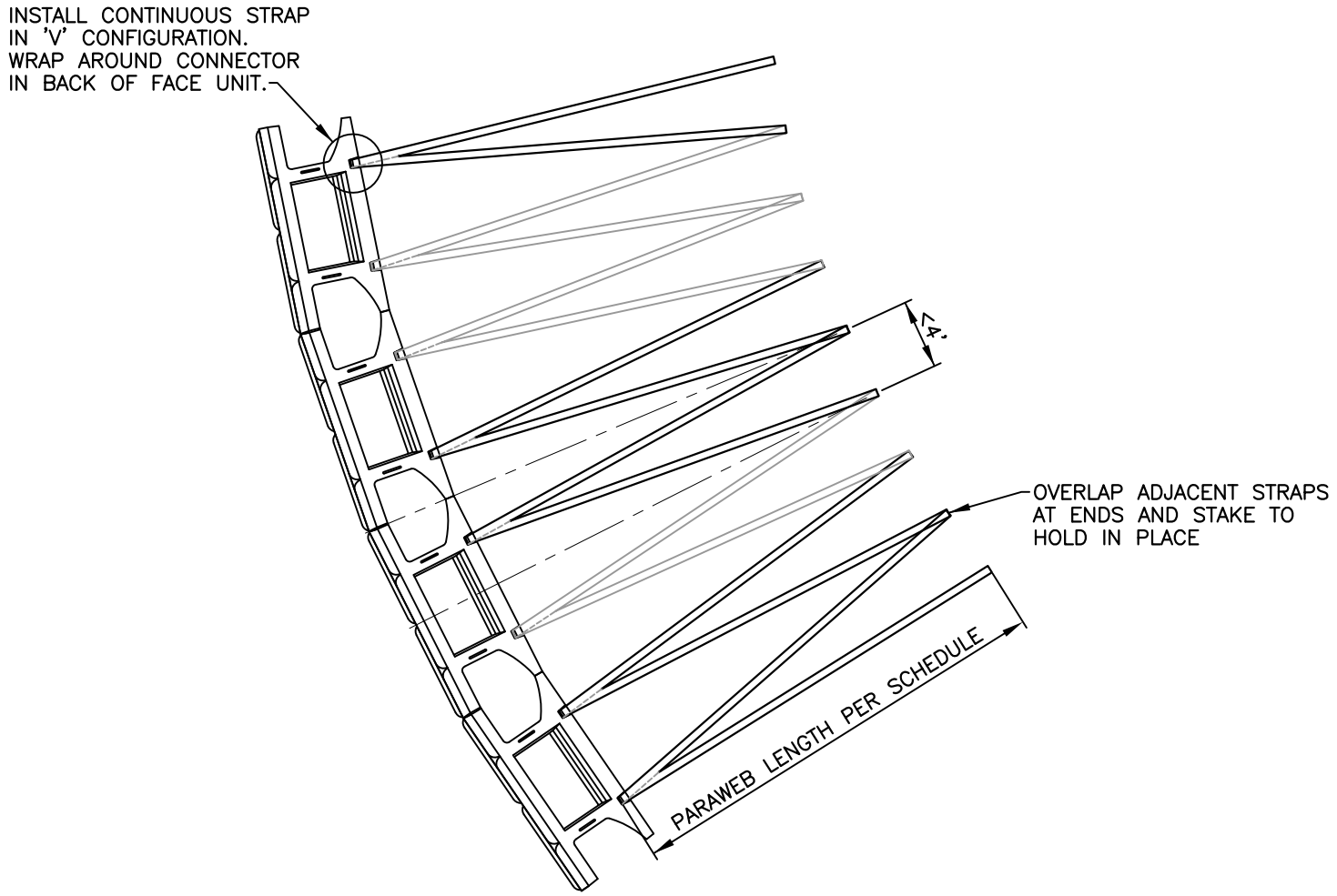

PARAWEB ON
LONG RADIUS CONVEX CURVE

NOT TO SCALE

DISCLAIMER:

These typical details are preliminary and conceptual in nature. They are provided for general information purposes only. Anyone making use of these details and related information does so at their own risk and assumes all liability for such use. Site specific design should be performed by a licensed Professional Engineer based on actual site conditions, materials, and local practices.

Stone Strong LLC retains al common law, statutory, and other reserved rights to these drawings including the copyright. Limited license is granted to copy, reproduce, or modify the details to prepare construction drawings for Stone Strong retaining walls. Stone Strong LLC makes no warranties, either expressed or implied, of merchantability or fitness for any particular purpose, and accepts no responsibility for the accuracy, suitability, or completeness of information contained herein.

STONE STRONG SYSTEMS®

www.stonestrong.com

PROJECT

TYPICAL DETAILS
STONE STRONG SYSTEMS

DATE: 6/29/18 | FILE: 23_Para.LgRad.Conv

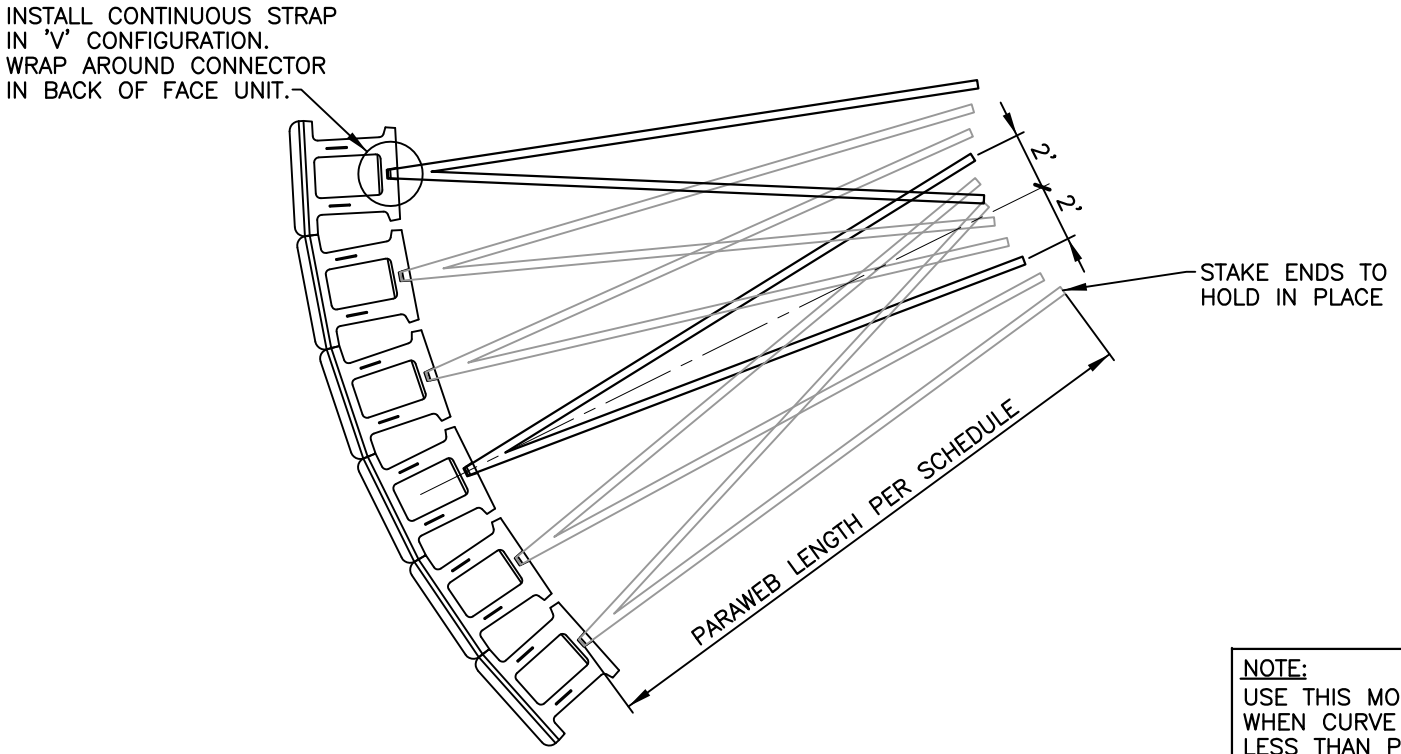

NOTE:
USE THIS MODIFIED LAYOUT WHEN CURVE RADIUS IS LESS THAN PARAWEB LENGTH PLUS 10 FEET

PARAWEB ON SHORT RADIUS CONVEX CURVE

NOT TO SCALE

DISCLAIMER:
These typical details are preliminary and conceptual in nature. They are provided for general information purposes only. Anyone making use of these details and related information does so at their own risk and assumes all liability for such use. Site specific design should be performed by a licensed Professional Engineer based on actual site conditions, materials, and local practices.

Stone Strong LLC retains al common law, statutory, and other reserved rights to these drawings including the copyright. Limited license is granted to copy, reproduce, or modify the details to prepare construction drawings for Stone Strong retaining walls. Stone Strong LLC makes no warranties, either expressed or implied, of merchantability or fitness for any particular purpose, and accepts no responsibility for the accuracy, suitability, or completeness of information contained herein.

STONE STRONG SYSTEMS®

www.stonestrong.com

PROJECT

TYPICAL DETAILS
STONE STRONG SYSTEMS

DATE: 6/29/18 | FILE: 24_Para.ShRad.Conv

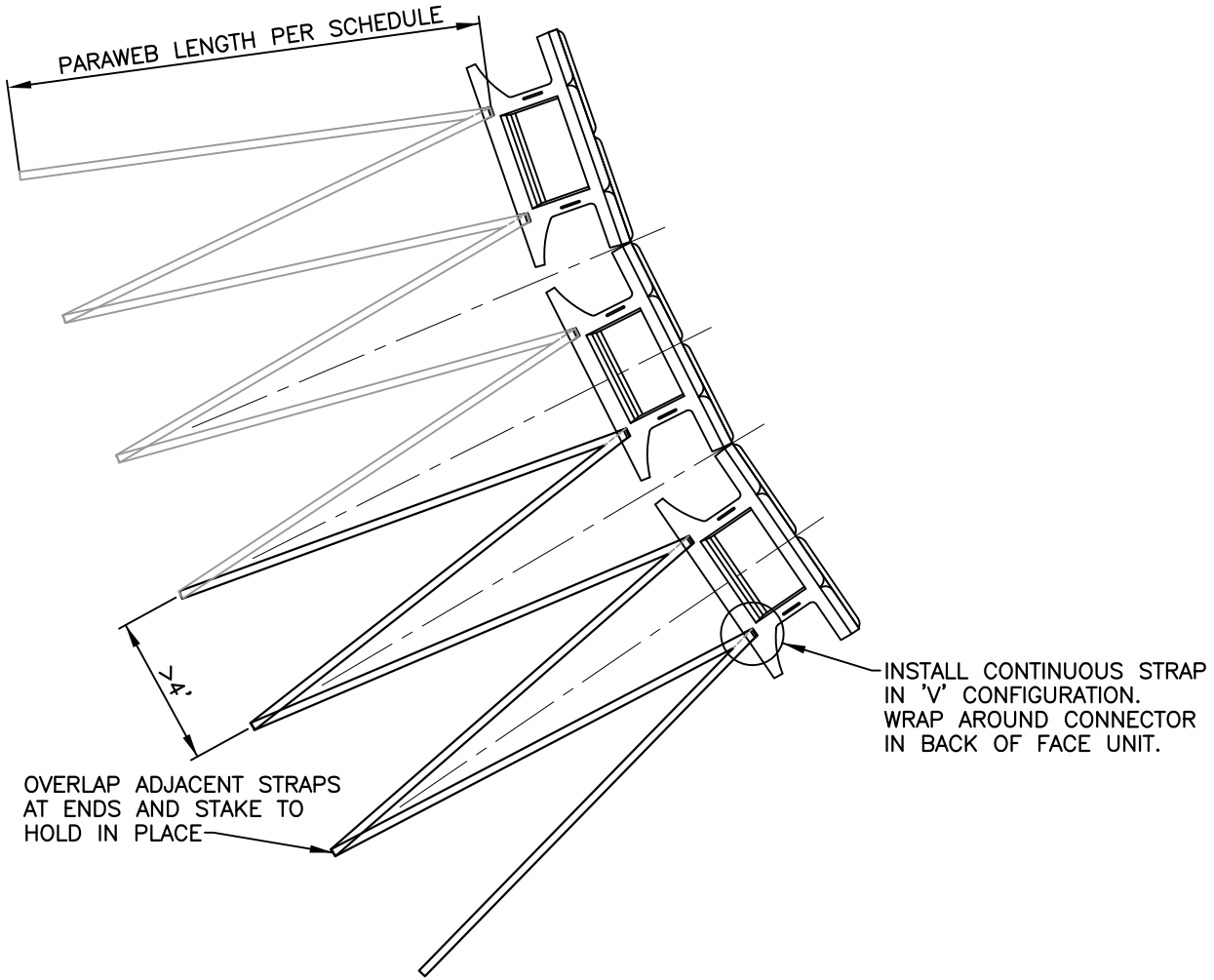

PARAWEB ON CONCAVE CURVE

NOT TO SCALE

DISCLAIMER:

These typical details are preliminary and conceptual in nature. They are provided for general information purposes only. Anyone making use of these details and related information does so at their own risk and assumes all liability for such use. Site specific design should be performed by a licensed Professional Engineer based on actual site conditions, materials, and local practices.

Stone Strong LLC retains al common law, statutory, and other reserved rights to these drawings including the copyright. Limited license is granted to copy, reproduce, or modify the details to prepare construction drawings for Stone Strong retaining walls. Stone Strong LLC makes no warranties, either expressed or implied, of merchantability or fitness for any particular purpose, and accepts no responsibility for the accuracy, suitability, or completeness of information contained herein.

STONE STRONG SYSTEMS®

www.stonestrong.com

PROJECT

TYPICAL DETAILS
STONE STRONG SYSTEMS

DATE: 6/29/18 | FILE: 25_Paraweb.Concave

3.1.6 FACING ALIGNMENT

No attachments

© Stone Strong Systems

3.1.7 BACKFILL PLACEMENT

No attachments

© Stone Strong Systems

3.1.8 EROSION DURING CONSTRUCTION

No attachments

© Stone Strong Systems

3.1.9 INSTALLER QUALIFICATIONS

No attachments

© Stone Strong Systems

4.1.1 FACING PRODUCTION QUALITY CONTROL

Stone Strong QA/QC Manual

© Stone Strong Systems

Quality Control and Quality Assurance Manual

Issue Date: 8/1/2008

Revised: 6/1/2020

Version 2.32

STONE STRONG, LLC

13460 Chandler Road
Suite 100
Omaha, Nebraska 68138

Toll-Free: 1-877-501-5652
Phone: 402-973-1292

www.stonestrong.com
info@stonestrong.com

TABLE OF CONTENTS

TABLE OF CONTENTS 1
INTRODUCTION 2
IMPLEMENTATION TIMELINE 2
MANUAL VERSION 2
REFERENCED DOCUMENTS 3
RESPONSIBILITIES OF PARTIES 4
STONE STRONG 4
STONE STRONG LICENSED DEALERS 5
SUPPLIERS OF MATERIALS TO DEALERS 6
ENGINEER OR OWNER'S REPRESENTATIVE 6
INSTALLATION CONTRACTOR 7
QUALITY CONTROL AND QUALITY ASSURANCE OVERVIEW 8
QUALITY CONTROL ROLE - DEALERS 8
QUALITY ASSURANCE ROLE – STONE STRONG 8
DEALER'S QUALITY CONTROL SUBMITTALS 9
ANNUAL SUBMITTAL SCHEDULE 9
FORMAT OF ANNUAL SUBMITTAL 9
CERTIFIED PLANT STATUS 9
QC SUBMITTAL PACKAGE FOR CERTIFIED PLANTS 11
QC SUBMITTAL PACKAGE FOR NON-CERTIFIED PLANTS 12
SUPPLEMENTAL SUBMITTALS 13
EQUIPMENT OUT OF SERVICE 14
REVIEW OF DEALER'S QC SUBMITTALS 15
QC SUBMITTAL REVIEWER 15
QA REVIEW RESPONSE 15
DEALER CORRECTIVE ACTIONS 15
DISCRETIONARY AUDITS 15
QUALITY CONTROL PERSONNEL & METHODS 16
QC PERSONNEL CERTIFICATIONS 16
TRAINING PROGRAM FOR DEALER QC TECHNICIANS 17
QUALITY SYSTEMS RECORDS RETENTION 19
PROCEDURES FOR HANDLING TECHNICAL COMPLAINTS 20
QUALITY CONTROL OF MANUFACTURING 21
ADDRESSING NON-CONFORMANCES 22
QUALITY CONTROL OF DESIGN 24
QUALITY CONTROL OF CONSTRUCTION 26
GLOSSARY 28

INTRODUCTION

This Quality Control and Quality Assurance Manual addresses Quality Control (QC) performed by licensed STONE STRONG Dealers and the role of Quality Assurance (QA) performed by STONE STRONG. This Manual presents roles and responsibilities, relationship of Quality Control and Quality Assurance functions, general information pertinent to Quality Control and Quality Assurance, and discusses Quality Control and Quality Assurance associated with manufacturing, design, and installation of STONE STRONG systems precast modular block (PMB) retaining walls.

Building structurally sound earthen retaining walls requires a high level of care and expertise. STONE STRONG is dedicated to the quality and performance of our wall system manufacturing components and precast modular blocks. Quality Control and Quality Assurance functions are vital to the success of our products.

IMPLEMENTATION TIMELINE

STONE STRONG implemented the QCQA Manual in 2008. As STONE STRONG has maintained a QCQA Manual since 2008, all active Dealers as of January 1, 2015 are required to have the Quality Control mechanisms discussed within this Manual in-place.

In the case of future Dealers, their Quality Control program(s) will be reviewed concurrently with the initial start visit and approval of being a Licensee. After the initial review and acceptance of the Dealer's programs, the Dealer will submit Quality Control documentation to STONE STRONG for review per the Dealer's Quality Control Submittal schedule presented in a later section of this Manual.

MANUAL VERSION

The last significant version of the STONE STRONG Quality Control/Quality Assurance Manual was Version 2.1, issued on September 15, 2009. STONE STRONG has adopted additions and revisions to the Quality Control/Quality Assurance Manual as revised on October 1, 2015 and identified as Version 2.3.

REFERENCED DOCUMENTS

The following STONE STRONG Manuals are referenced within the Quality Control Quality Assurance Manual. These documents can be provided by STONE STRONG Licensed Dealers. Additionally, these documents will be available on the STONE STRONG website at www.stonestrong.com.

- Stone Strong Production Manual
- Stone Strong Engineering Manual
- Stone Strong Field Construction Manual

RESPONSIBILITIES OF PARTIES

STONE STRONG

The STONE STRONG Quality Control/Quality Assurance program has been established to provide the Dealer (precaster licensee) with the proper tools and education to ensure the consistency and the quality of the Retaining Wall System.

STONE STRONG in its role as the patent holder and designer of the system is responsible to educate the Dealer (precaster licensee) to ensure that the system is produced within the tolerances permitted by STONE STRONG, project specific drawings and the STONE STRONG Production Manual. STONE STRONG shall use document control, plant start-up visits and periodic plant inspections to assure that the Dealer's Quality Control programs are being followed. STONE STRONG will:

- Evaluate each potential Dealer (precaster licensee) in terms of their plant, plans, facilities, existing plant quality control, plant certifications and fiscal strength. Review the potential Dealer's prior experience and reputation in the industry.
- Define the Dealer (precaster licensee's) responsibilities and obligations in terms of the License Agreement.
- Issue an Agreement which conveys particular performance functions to the licensee and grant access to the precaster licensee's plant and quality control information.
- Review with the precaster licensee:
    - The standard drawings and specifications to assure understanding of the drawing nomenclature and the various system components.
    - The Production Manual to assure understanding of the required testing and inspection procedures, casting techniques and quality control.
    - The qualified material sources from which to order the specified system components.
- Review monthly production reports.
- Periodically review concrete break reports and testing certifications.
- A STONE STRONG representative or a trained Dealer licensee representative is on site at the start of each project to assure compliance with project specifications and the Installation Manual and trains the Contactor and his crew in the proper techniques of construction.
- Visit each new Dealer licensee for a start-up visit to assist the precaster licensee in setting up the manufacturing operation and makes periodic follow up visits to each licensed plant. The STONE STRONG representative's role is to assure that the precast modular block is

manufactured in accordance with specifications and to verify that the established procedures are being adhered to.

- For established Dealers, STONE STRONG or their designee may conduct plant visits and oversight. The frequency of reoccurring visits/oversight will be determined by STONE STRONG based on the Dealer's performance, documentation reviews, periodic Quality Control submittals, and history of complaints and nonconformances

STONE STRONG LICENSED DEALERS

STONE STRONG Licensed Dealers will produce precast modular blocks following the most current version of the STONE STRONG Systems Production Manual at the time of manufacturing. The Dealer is responsible for the manufacturing of the STONE STRONG systems precast modular blocks and to ensure that units meet the dimensional tolerances and materials specifications as required by STONE STRONG. Dimensional tolerances are defined within the QC/QA Manual. Materials specifications are found in a standalone STONE STRONG document, the *Manufacturing Specifications for Precast Modular Block retaining Wall System.*

Updates to STONE STRONG Manuals will be distributed either by mail or by email. Updates sent via email will be sent in PDF format. Dealers will be required to sign and return an acknowledgment form noting the receipt of updates to Manuals.

Licensed Dealers also may assist the engineer, owner, contractor and inspectors in scheduling of materials, construction procedures, contract documents, plans, and specifications. The STONE STRONG Dealer shall not be responsible for means or methods of design, construction or for safety of workers or of the general public.

STONE STRONG Dealers can be available to assist and train contractors and inspectors as requested and as necessary. Dealers may also refer interested parties to the STONE STRONG Quality Assurance Officer for additional information, technical support, and resource materials. To support our Dealers, the STONE STRONG website provides numerous resources on our components, design considerations, and installation guidelines.

STONE STRONG Dealers shall have product liability insurance and will provide Certificates of Insurance annually to STONE STRONG. The required limits of insurance coverage shall be 2 Million each occurrence and 2 Million aggregate per the License Agreement.

SUPPLIERS OF MATERIALS TO DEALERS

Materials Suppliers will be responsible for materials delivered and utilized to manufacture STONE STRONG precast modular blocks. Materials Suppliers materials may include: Ready Mixed Concrete, wire or reinforcing steel, aggregates, Portland cement, or other materials utilized in the manufacturing of the precast modular blocks. Material suppliers will provide STONE STRONG Dealers with materials test data and or statements of conformance to specifications. Test data and or statements of conformance will be submitted to STONE STRONG Dealers at the intervals presented in later sections of this Manual.

Materials Suppliers will provide STONE STRONG Dealers with Certificates of Insurance. The coverages shall include Workers Compensation and Product Liability. The required limits of coverage shall be 1 Million each occurrence and 1 Million in aggregate coverage.

ENGINEER OR OWNER'S REPRESENTATIVE

The Engineer or Owner's representative is responsible for the preparation and enforcement of the wall construction contract documents, plans, and specifications. STONE STRONG recommends that the Engineer or Owner employ services of a geotechnical/materials engineering firm to provide Quality Control testing during embankment construction and backfilling operations. It is further recommended to employ an Engineer or inspection firm to document installation procedures and conformance of the installed system to the plans and specifications. The Engineer and Owner shall not be responsible for means or methods of manufacturing, construction or for safety of workers or of the general public.

INSTALLATION CONTRACTOR

Installation Contractors shall follow shop drawings or construction procedures and recommendations cited in the most current version of STONE STRONG's *Field Construction Manual* at the time of installation. The Installation Contractor is responsible for checking materials upon delivery to assure that proper materials have been received. Contactors will protect materials from damage. Damaged materials shall not be incorporated into the wall or reinforced soil embankments, and should be disposed of properly off site. Furnishing and installing STONE STRONG precast modular blocks to the lines and grades shown on the plans and as specified is the responsibility of the Installation Contractor. The Installation Contractor is responsible for proper embankment, construction, placement in fill materials, backfilling and localized drainage control. The contractor is solely responsible for site safety.

QUALITY CONTROL AND QUALITY ASSURANCE OVERVIEW

QUALITY CONTROL ROLE - DEALERS

Quality Control refers to the quality related activities associated with manufacturing of the precast modular blocks. Quality Control is used to monitor and document that the precast modular blocks are manufactured to meet specified quality requirements. Quality Control functions will focus on monitoring, auditing, and improving the manufacturing process. STONE STRONG Dealers will implement their own internal Quality Control systems and provide documentation of Quality Control activities to STONE STRONG. Dealer's Quality Control documentation must be acceptable to the standards presented within this Manual.

STONE STRONG Dealers may utilize documents presented within this or other STONE STRONG Manuals, may develop their own documentation formats, or may follow accepted QC programs developed by organizations such as the National Precast Concrete Association (NPCA), the Precast/Prestressed Concrete Institute (PCI), the Pre-Cast Concrete Association of America (PCA), or similar national or regional organizations.

QUALITY ASSURANCE ROLE – STONE STRONG

STONE STRONG or their designee will act as the Quality Assurance reviewer. The role of Quality Assurance is intended to further review and document product quality, support Dealer's Quality Control systems, and improve manufacturing processes related to the product.

Quality Assurance will focus on reviews of the Dealer's plant certifications, personnel certifications, form and liner inspections, Quality Control records, materials test data, manufacturing documentation, addressing technical complaints, and installation monitoring. The role of Quality Assurance by STONE STRONG will also include product research and development, product improvements, and design modifications. Quality Assurance will include emphasis on reviewing each Dealer's Quality Control activities and related documentation through a periodic Dealers' Quality Control submittal and Quality Assurance review process.

DEALER'S QUALITY CONTROL SUBMITTALS

ANNUAL SUBMITTAL SCHEDULE

Each STONE STRONG Dealer will be assigned a deadline date to submit an **ANNUAL** summary of the Dealer's Quality Control documentation to STONE STRONG for Quality Assurance review. The required items for the ANNUAL submittal are presented in later sections of this Manual. A Quality Assurance response will be issued by STONE STRONG within 30 business days from receipt of the Dealer's Annual Submittal.

FORMAT OF ANNUAL SUBMITTAL

STONE STRONG Dealers are required to submit Quality Control documentation for Quality Assurance Review. Dealers may utilize forms or formats developed in-house, developed by other organizations or agencies, or utilize the generic forms provided by STONE STRONG. It is not the intent herein to specify specific forms and formats, but to provide a general overview of STONE STRONG's expectations for the Dealer's Quality Control submittal. The Dealer's Quality Control submittal must include the items identified in later sections of this Manual.

CERTIFIED PLANT STATUS

If a Dealer is a member firm of and is operating a Certified Plant through an organization such as the National Precast Concrete Association (NPCA) or other nationally or regionally recognized organization or program, the Dealer is required to submit copies of their inspections or assessments to STONE STRONG as part of their annual submittal.

It is important to understand that the contents of the Quality Control submittal differs significantly depending on if the Dealer is a member of the NPCA, or another organization considered equivalent by STONE STRONG, and the Dealer's Plant Certification status. **STONE STRONG highly encourages its Dealer's to achieve an acceptable plant certification.** To determine if an organization will be considered equivalent to the NPCA, contact the STONE STRONG Quality Assurance Officer.

The following are examples of Plant Certifications deemed acceptable by STONE STRONG. The plant certification must be in active status. A copy of the plant certification must be provided and the certification shall be on letterhead or certificate form with the certification agency name provided.

- National Precast Concrete Association (NPCA)
- Precast Concrete Institute (PCI)
- State Department of Transportation (DOT)
- State Department of Roads (DOR)

The Dealer's Quality Control annual submittal package shall follow one of the two following formats. One format is for Dealers with their production facility currently certified by an organization or agency deemed acceptable by STONE STRONG. A second format is for Dealer's production facilities lacking any approved production facility certification status. The production facility certification must be for the facility producing STONE STRONG units, not an affiliated location.

QC SUBMITTAL PACKAGE FOR CERTIFIED PLANTS

FOR DEALERS WITH NPCA OR EQUIVALENT PLANT CERTIFICATION the QUALITY ASSURANCE REVIEW SUBMITTAL PACKAGE CONTENTS shall include:

ANNUAL SUBMITTALS

PROOF OF PLANT CERTIFICATION

- Submit copies of most current inspection or assessment
- Submit documentation stating certification status is current.

FORMS, LINERS AND RELATED INVENTORY & POLICIES

- Inventory of all molds (forms) and liners, both in-service and out-of-service
- Provide copies of:
    - Mold (form) removal from service records
    - Mold (form) and liner maintenance records, policies and programs
    - Mold (form) and liner storage policies and procedures for system components
    - Records of nonconformances

INSTALLATION MONITORING

- A brief written summary of at least two projects completed within the most recent 12 months. If two or less projects have been constructed, this section may be omitted.

PRODUCTION RELATED TECHNICAL COMPLAINTS

- Provide a brief written summary or copies of any technical complaints related to the manufacturing process.

INSURANCE COVERAGE

- Provide a Certificate of Insurance

QC SUBMITTAL PACKAGE FOR NON-CERTIFIED PLANTS

FOR DEALERS WITHOUT NPCA OR EQUIVALENT PLANT CERTIFICATION the QUALITY ASSURANCE REVIEW SUBMITTAL PACKAGE CONTENTS shall include:

ANNUAL SUBMITTALS

FORMS, LINERS AND RELATED INVENTORY & POLICIES

- Inventory of all molds (forms) and liners, both in-service and out-of-service
- Provide copies of:
  - Mold (form) removal from service records
  - Mold (form) and liner maintenance records, policies and programs
  - Mold (form) and liner storage policies and procedures for system components
  - Records of nonconformances

INSTALLATION MONITORING

- A brief written summary of at least two projects completed within the most recent 12 months. If two or less projects have been constructed, this section may be omitted.

PRODUCTION RELATED TECHNICAL COMPLAINTS

- Provide a brief written summary or copies of any technical complaints related to the manufacturing process.

INSURANCE COVERAGE

- Provide a Certificate of Insurance

SUPPORTING DOCUMENTATION - QUALITY

- *Records of Quality Control personnel training and certifications*
- *Certificates of calibration or verification of testing and reference equipment*

SUPPORTING DOCUMENTATION - MANUFACTURING / PRODUCTION

- *Policies for curing and handling*
- *Post pour inspection forms*
- *Records of non-conformances – units damaged, destroyed or repaired*

SUPPORTING DOCUMENTATION – LOADING / TRANSPORT / UNLOADING

- *Dealers handling & transport procedures*
- *Precast modular blocks damaged or destroyed*

Above items presented in *italics* are those items in additional to the minimum submittal requirements for certified plants.

SUPPLEMENTAL SUBMITTALS

STONE STRONG **may request** any of the below Quality Control documentation **at its discretion at any time.** All Dealers should perform the below indicated Quality Control measurements and record keeping and have this information available for review. These items may be requested in addition to the Dealer's annual submittal or at periodic unannounced intervals.

QUARTERLY SUBMITTALS

FORMS, LINERS AND RELATED provide copies of:

Items	Inspect for	Frequency
Mold (form)	Dimensions, Condition & Compliance with Tolerances	Quarterly – all units
Mold (form) – Short Doors	Straightness & Compliance with Tolerances	Quarterly – all units
Mold (form) – Long Doors	Straightness & Compliance with Tolerances	Quarterly – all units
Liners	Dimensions & Condition	Quarterly – all units
Lifting Loops	Dimensions & Condition	As Received - Min. 10 units from each shipment

MONTHLY SUBMITTALS

FORMS, LINERS AND RELATED provide copies of:

Items	Inspect for	Frequency
Random Block Checks	Dimensions	Weekly - Min. of 2 blocks of each size being cast

SUPPLEMENTAL INFORMATION

- Results of air content, slump, unit weight, and compressive strength testing
- Welded wire or block mesh – manufacturer's production Quality Control
- Records of non-conformances

EQUIPMENT OUT OF SERVICE

If the STONE STRONG production molds, liners, and related components required to produce STONE STRONG precast modular blocks were not utilized during a calendar quarter, the DEALER shall record on all pertinent inspection records that these ITEMS WERE REMOVED FROM SERVICE during this time period.

Any specified Annual inventories and other Quality Control monitoring and documentation will still be required.

REVIEW OF DEALER'S QC SUBMITTALS

These submittals and reviews are not intended to be an economic or time burden to our Dealers. Our intentions are to assure the quality of the deliverable product, to improve the product and to protect the product image, brand, and name.

QC SUBMITTAL REVIEWER

STONE STRONG Dealers are required to submit Quality Control (QC) documentation to a designated STONE STRONG reviewer. Submittals should be directed to STONE STRONG to the attention of the Quality Assurance Officer. STONE STRONG may assign Dealers different submittal reviewers at their discretion.

QA REVIEW RESPONSE

STONE STRONG will review the Dealer's Quality Control submittal and respond with any comments, requests for additional information, and or required corrective actions. The STONE STRONG response will be issued within 45 days of receipt of the Dealer's Quality Control submittal.

DEALER CORRECTIVE ACTIONS

If the Dealer is requested to perform corrective actions and or submit additional materials for review to STONE STRONG, the Dealer's responses and supporting documentation must be submitted within 30 days the date of the response letter issued by STONE STRONG. Any further resolution and correspondence of outstanding issues will be issued specific dates for final resolution on a case by case basis.

DISCRETIONARY AUDITS

STONE STRONG reserves the right to conduct Quality Control and production quantity audits at their sole discretion. Discretionary Quality Control and production quantity audits may be performed by STONE STRONG or their designee.

QUALITY CONTROL PERSONNEL & METHODS

QC PERSONNEL CERTIFICATIONS

Dealer's Quality Control technicians will be certified to perform concrete sampling and testing. Certifications for Quality Control personnel and materials testing technicians shall be acquired through nationally, regionally, or locally recognized programs. Organizations providing certification programs include the American Concrete Institute (ACI), the National Institute for Certification in Engineering Technologies (NICET), and Departments of Transportation. To determine if a certification organization or program other than those identified will be considered as acceptable, contact the STONE STRONG Quality Assurance Officer.

The American Concrete Institute (ACI) offers several applicable certification programs for testing technicians working with concrete materials and precast products. Some of the certification programs offered by the American Concrete Institute (ACI) are shown below, as examples of certifications available. STONE STRONG recommends that concrete sampling and testing technicians obtain ACI Concrete Field Testing Technician Grade I status or an equivalent at a minimum.

ACI Aggregate Technician Certification Program

Aggregate Testing Technician - Level 1

ACI Craftsman Certification Program

Concrete Flatwork Finisher/Technician

ACI Field Technician Certification Program

Concrete Field Testing Technician - Grade I

ACI Inspector Certification Program

Concrete Construction Special Inspector

ACI Laboratory Technician Certification Program

Concrete Laboratory Testing Technician - Level 1

Concrete Strength Testing Technician

TRAINING PROGRAM FOR DEALER QC TECHNICIANS

In addition to being certified to perform materials testing, Dealer's Quality Control testing technicians shall be trained in regards to the Dealer's specific forms and procedures prior to performing tests not previously performed. The following training procedures shall be followed for each test. The Dealer is responsible for technician training per their procedures.

- The trainee shall obtain a copy of the most current applicable test method procedures and test data report forms.
- The trainee shall study the test procedures and test report forms to become familiar with the equipment, terminology, test procedures, calculations and test reports.
- A certified technician shall demonstrate the test procedures for the trainee.
- The trainee shall repeatedly perform the test procedures under the direction of the certified technician until the desired degree of proficiency is achieved.
- A certified technician or supervisor shall observe the trainee demonstrating the procedure(s) and document that the trainee has successfully demonstrated the ability to perform the test procedure(s), if it is performed properly, by making an entry in the trainee's training records.

QUALITY CONTROL TEST METHODS

The following table presents the testing methods that will be utilized for testing concrete, aggregates, Portland cement, wire reinforcement or other raw materials. It is preferred to utilize the ASTM test methods, but either the ASTM or AASHTO methodologies are acceptable for Quality Control testing. Always reference the most current version of the test methods being utilized.

ASTM	AASHTO	Materials	Description
C31	T23	Concrete	Making/Curing Concrete Test Specimens in Field
C39	T22	Concrete	Compressive Strength of Cylindrical Concrete Specimens
C42	T24	Concrete	Obtaining and Testing Drilled Cores or Sawed Beams
C138		Concrete	Unit Weight, Yield and Air Content (Gravimetric) of Concrete
C143	T119	Concrete	Slump of Concrete
C172	T141	Concrete	Sampling Freshly Mixed Concrete
C173		Concrete	Air Content by Volume Method
C192		Concrete	Making/Curing Concrete Test Specimens in Laboratory
C231	T152	Concrete	Air Content by Pressure Method
C617		Concrete	Capping of Cylindrical Concrete Specimens
C1064		Concrete	Temperature of Concrete
C1231		Concrete	Use of Unbonded Caps - Compressive Strength
C29	T19	Aggregates	Unit Weight and Voids of Aggregate
C40	T21	Aggregates	Organic Impurities in Sands for Concrete
C117	T11	Aggregates	Amount of Material Finer than 0.075-mm Sieve
C127	T85	Aggregates	Specific Gravity and Absorption of Coarse Aggregate
C128	T84	Aggregates	Specific Gravity and Absorption of Fine Aggregate
C136	T27	Aggregates	Sieve Analysis of Fine & Coarse Aggregate
C566	T255	Aggregates	Total Moisture Content of Aggregate by Drying
C702	T248	Aggregates	Reducing Field Samples of Aggregate to Testing Size
C150	M85	Cement	Portland Cement
A82	M32	Reinforcement	Steel Wire, Plain, for Concrete Reinforcement
A184	M54	Reinforcement	Deformed Steel Bar Mats for Reinforcement
A185	M55	Reinforcement	Steel welded wire fabric
A123	M111	Reinforcement	Zinc (hot-dip galvanized) coatings on steel
A496	M225	Reinforcement	Steel Wire, Deformed, for Concrete Reinforcement
A615	M31	Reinforcement	Deformed & Plain Billet Steel Bars for Reinforcement
D3963	M284	Reinforcement	Epoxy Coated Reinforcing Steel

QUALITY SYSTEMS RECORDS RETENTION

The minimum recommended retention periods for various Dealers' Quality Control documentation retention timeframes are shown in the following table.

Test Equipment Calibrations/Verifications	5 years minimum
Form, Block Insert & Liner Inventories & Condition Assessments	5 years minimum
Inspections by Outside Organizations or Agencies	5 years minimum
Post Pour Inspections	5 years minimum
QC Personnel Training & Certifications	5 years minimum
QC Testing Records	5 years minimum

PROCEDURES FOR HANDLING TECHNICAL COMPLAINTS

A technical complaint is a real or perceived issue that could result in adverse performance of an individual precast modular block or a completed installed system. A technical complaint is defined as an issue occurring between the start of the manufacturing process and lasting through the life of the installed system.

Upon receipt of a manufacturing technical complaint at the Dealer level, the following actions shall be taken as Quality Control by the Dealers:

- The Dealer's Quality System Manager shall be notified orally or by written statement.
- The Complaint is brought to the attention of the Supervisor of the department or section in question by the Quality Control System Manager.
- A designated representative at the Dealer will contact the complainant to verify aspects of the complaint and establish a resolution date, if necessary.
- Review reports, records and pertinent data. Review calculations for accuracy.
- A designated representative shall formulate an appropriate reply and issue it to the complainant, in either verbal or written form, preferably both.
- The Dealer will notify the STONE STRONG Quality Control Officer of the complaint, the key factors associated with the complaint, any pertinent QC documentation and the resolution.
- STONE STRONG can assist in the resolution process, if requested by the Dealer.

QUALITY CONTROL OF MANUFACTURING

STONE STRONG Systems is dedicated to overall quality and performance, to assure that the wall system will perform to the requirements of the project.

STONE STRONG Manufacturers Shall:

- Be a licensed dealer.
- Have knowledge and experience in processes necessary to manufacture precast modular blocks.
- Have a thorough understanding of the STONE STRONG system.
- Have proper equipment and adequate labor to manufacture the STONE STRONG system.
- Directly employ or subcontract personnel certified to perform materials testing services.

Proper manufacturing techniques should include the following:

- Conformance with the most current version of the STONE STRONG Production Manual as available at the time of production.
- Sample and test concrete in compliance with the most current version of either AASHTO's Standard Specifications for Transportation and Methods of Sampling and Testing or the most current applicable versions of ASTM testing methodologies.
- Block should be clearly marked with the date of manufacture and as required by project specifications.
- Record and keep on file for future reference each day's production to include mix design, date of manufacture.
- Check tolerances of the forms and blocks per the previous identified inspection intervals and record for compliance with specifications. Tolerances should be recorded and kept on file for future reference.
- Check liners on a monthly basis to ensure proper fit when the mold door is closed. Liners shall meet the same specifications as above in areas effecting critical dimensions.
- Cleaning forms prior to pouring product. It is recommended to use steel wool for removal of any residual concrete prior to each pour and power wash entire form monthly.
- Installing lift/alignment loops manufactured to the materials specifications in accordance with the STONE STRONG Production Manual.
- Handling and storage of units in accordance with the STONE STRONG Production Manual.

SPECIFIED TOLERANCES

- **Form Tolerances**
  - ± 1/8 inch across side doors and end doors
  - ± 1/8 inch at side door stops
  - ± 1/8 inch at squaring pins on side doors
  - ± 1/16 inch at door hinge pins

- **Block Tolerances**
  - ± 1/8 inch in height
  - ± 1/8 inch in length
  - ± 1/8 inch differential from plane across the top and base of unit
  - Minus 1/4 inch to plus 1/2 inch maximum width (face to tail)

Note: When using Paraweb, refer to pgs.25-28 of Stone Strong's "Typical Detail" library for placement of connection inserts.

STONE STRONG or their representative will provide the following:

- Technical assistance to the manufacture at their request
- Production Manual
- Engineering Manual
- Field Construction Manual
- Maintenance Guide

ADDRESSING NON-CONFORMANCES

A nonconformity is any raw materials deficiency, any damage that occurs from normal handling/storage, and/or exceeding the tolerances as described within the Form and or Block tolerances section in the Quality Control of Manufacturing section of this Manual.

When a nonconformity is detected it must be documented in writing. Nonconformance documentation may include photographs, specific observations, measurements, test data, or other data. The Dealer shall document the nonconformity and submit documentation to STONE STRONG for review within 5 days of becoming aware of the nonconformity.

The Dealer will investigate and attempt to define how long the nonconformity has existed and the production output that may be affected. If more than a single unit is expected to have a related nonconformity, the Dealer will inspect the production run in question. Furthermore, the Dealer will attempt to define the impact of the nonconformity. The impact could include effects of product nonconformity on wall system performance in terms of durability or structural capacity, changes in product manufacture, and product liability concerns.

The Dealer shall consider the factors that allowed the nonconformity to exist or occur. Consider the possible casual factors in regards to what sequence of event(s) lead to the nonconformity, what conditions allowed the nonconformity to occur, what other nonconformities may surround the occurrence of the central nonconformity. Then identify the root causes for causal factors to exist and the reason(s) the nonconformity occurred.

After indentifying the root cause of the nonconformity, recommend and implement solutions to resolve the root causes of the nonconformity. Identify what can be done to prevent the nonconformity from happening again. In addition, consideration shall be given to what improvements to the Dealer's Quality Control system can be implemented to prevent a similar nonconformity. Document the plan to monitor the effective implementation of the corrections and or improvements. The Dealer will identify in writing how and when the resolution will be implemented, who will be responsible for it, and what the risks of implementing the solution are.

QUALITY CONTROL OF DESIGN

STONE STRONG Systems is dedicated to overall quality and performance to assure that the wall system will perform to the requirements of the project. The Design Engineer shall be able to demonstrate and document experience with earth retaining systems design. STONE STRONG will be available to provide additional support for assessing the Design Engineer's ability to design earth retaining systems utilizing the STONE STRONG precast modular blocks. Furthermore, STONE STRONG Design software is available to licensed engineers to assist in wall design of gravity retaining walls. The engineer of record is responsible for conforming to customary engineering standards.

The Design Engineer shall:

- Be a licensed engineer in the state of the project.
- Have knowledge and experience in the process necessary to design precast modular block retaining walls.
- Have a thorough understanding of the STONE STRONG system.
- Have knowledge of local codes as they pertain to the process necessary to design precast modular block retaining walls.
- Be familiar with the requirements of the AASHTO Standard Specifications for Bridge Construction and FHWA-NHI-00-043, or other relevant design standards.
- Be familiar with the STONE STRONG System Engineering Manual.
- Be familiar with the most current version of the STONE STRONG Systems Field Construction Manual.
- Be solely responsible for the design of the individual walls issued under his/her seal.
- Provide a Certificate of Insurance to the Dealer manufacturing the precast modular blocks (does not apply if engineer is retained by owner or contractor).
- Provide a complete set of calculations showing how the wall meets design criteria and AASHTO or other relevant safety factors. External design should be evaluated at each critical section of the wall, including different boundary and loading conditions. Internal design should be evaluated at each critical section for each change in size of units (stepped modules) and for each module layer where the wall is subjected to lateral loading at the top of the wall or to seismic load conditions. Global stability may or may not be the responsibility of the wall engineer. Responsibility for global stability shall be noted within the drawings.
- Provide drawing review and design review checklists to the dealer (does not apply if engineer is retained by owner or contractor).

Design Review

- The wall design shall be reviewed by at least one qualified engineer other than the engineer of record.
- In cases where STONE STRONG or STONE STRONG Dealers have control or employ the Design Engineer, STONE STRONG may elect to perform a Quality Assurance review of the Design.
- In cases when the Design Engineer is employed by others, the Design Engineer may request a design review by approved STONE STRONG Dealers or Engineers recommended by STONE STRONG Systems.
- A design review checklist shall be submitted to the dealer along with the wall drawings and calculations.

STONE STRONG Systems or their representative will provide the following:

- Technical assistance to the design engineer at their request
- Engineering Manual
- Construction Details
- Field Construction Manual
- Maintenance Guide
- Gravity Analysis Software
- Quality Assurance review of design plans as described above

QUALITY CONTROL OF CONSTRUCTION

STONE STRONG Systems is dedicated to overall quality and performance to assure that the wall system will perform to the requirements of the project. The wall system Installation Contractor shall be able to demonstrate and document experience with earth retaining systems installation or demonstrate the ability to install system components with conformance to the most current version of the STONE STRONG Systems Field Construction Manual at the time of installation to the Owner. Licensed STONE STRONG Dealers shall be capable of reviewing an Installation Contractor's ability to install system components. STONE STRONG will be available provide additional support for assessing an Installation Contractor ability to install STONE STRONG precast modular blocks.

Contractor shall:

- Have knowledge and experience in the process necessary to construct precast modular block retaining walls.
- Have knowledge of local codes as they pertain to the installation of precast modular block retaining walls.
- Have a thorough understanding of the project site conditions.
- Review and have an understanding of the project plans and shop drawings.
- Have the proper equipment and adequate labor to assure proper installation of the wall.

Proper installation techniques should include the following:

- Blocks should be inspected prior to installation for quality.
- Excavation of the foundation to line and grade.
- Construction of the wall base to line and grade including compaction and quality control testing.
- Installation of the base course to line and grade. Care should be taken to assure that the base course is level side-to-side and front-to-back. Contractor shall verify base course before processing to next course.
- Installation of each course to assure that it is set to the proper line and grade.
- Grade the site at the end of each day's work so that runoff will be diverted from the wall construction.
- Cleanup site and dispose of excess construction materials at the completion of the installation.
- Site shall be graded as per the plans and verified by the engineer prior to completion of the project.

STONE STRONG Systems or their representative will provide the following:

- Technical assistance to the contractor at their request.
- Field Construction Manual
- Engineering Manual
- Construction Details
- Maintenance Guide

GLOSSARY

AASHTO - American Association of State Highway and Transportation Officials - advocates transportation-related policies and provides technical services in the form of standard specifications for highways and bridges.

ASTM - American Society of Testing and Materials - ASTM International is one of the largest voluntary standards development organizations in the world-a trusted source for technical standards for materials, products, systems, and services.

Contractor - The organization or individual that contracts with another organization or individual (the owner) for the construction of the retaining wall.

Design Engineer – The Engineer of record responsible for the actual design of the retaining wall. The Design Engineer may be the Project Engineer retained by the owner or may be retained by the Stone Strong Dealer or the Contractor to prepare shop drawings to meet the performance requirements established by the owner.

Federal Highway Administration (FHWA) - FHWA-NHI-00-043 Standard Specification.

Manufacturer - See STONE STRONG Dealer.

National Precast Concrete Association (NPCA) - represents manufacturers of plant produced precast concrete products and companies that provide the equipment, supplies and services to make these products.

Owner - The owner of the project for whom a contract has been made for the payment for the work performed under the terms of the contract.

Project Engineer - The owners designated organization or individual with authoritative charge over engineering functions and responsibilities.

Shop Drawings - is a drawing or set of drawings that show details of installations for the contractor

Specifications – STONE STRONG Standard Specifications

STONE STRONG Dealer - Dealer is responsible for the manufacturing of the STONE STRONG systems precast modular block and to ensure that it meets the minimum specifications as required by STONE STRONG. They also may assist the project engineer, owner, and contractor and inspectors in scheduling of materials, construction procedures, contract documents, plans and specifications. The Dealer shall be available to assist and train contractor and inspectors as requested and necessary.

4.1.2 REINFORCEMENT MANUFACTURE QUALITY CONTROL

Manufacturers Quality Control for Paraweb Reinforcement

© Stone Strong Systems

Manufacturers Quality Control for ParaWeb Reinforcement

Zwick tensile test machine

RESPONSIBILITY & AUTHORITY

The Geosynthetic Manufacturing Quality Control (MQC) Program is administered by the Manufacturing Manager. It shall be the responsibility of the managers of the laboratory data to adhere to this document at each of the individual plant.

The Manufacturing Manager has the responsibility for the quality of the geosynthetic products produced both internally and externally.

YARN

Consignments of high tenacity polyester yarn is shipped to our manufacturing facility and is accompanied by a certificate of analysis. Each consignment is certified by the manufacturer to meet or exceed physical properties in the certificate of analysis. MSDS sheets are also required from all suppliers for each shipment of yarn received into the facility.

Internal yarn testing is carried out when required.

MANUFACTURING PROCESS

The Manufacturing Department and staff work closely with the Technical staff, MQC and Engineering Department to ensure only first quality material is produced.

Statistical Process Control is the responsibility of the manufacturing manager during the manufacturing operations

During the Manufacturing operation for each production run production operatives complete a production process control record. All process changes are carefully recorded and monitored by manufacturing personnel. A database of all process conditions is maintained for reference. Manufacturing personnel continually monitor production lines for visual defects in the product. All process conditions are monitored to ensure run to run consistency. All Manufacturing jobs and processes are carried out in accordance with the written procedures.

The QA/QC group constantly monitors product property conformance. In case of non-conforming product, the manufacturing group is notified immediately. Both departments work together in solving the problem. The control of non-conforming products is done in accordance with written procedures to ensure proper labeling, segregation, and disposal.

QUALITY CONTROL TESTING

Linear Composites Limited products will meet or exceed the sampling frequency requirements for physical properties outlined in EN ISO 10319:2008 Geosynthetic Wide Width Tensile Test. All samples are taken and tested in accordance with written procedures. Products are regularly sent to independent third party laboratories for quality assurance testing. Non-conformities located during quality control tests are controlled in accordance with written procedures to ensure proper labeling, segregation, and disposal.

Linear Composites is accredited to the EN ISO 9001:2008 Quality Management System and the OHSAS 18001:1999 Occupational Health and Safety Management System

ParaWeb conforms to CE marking standards for the European Construction Products Directive for Geotextiles.

ParaWeb™
The Quality Manager/Laboratory Supervisor is responsible for the QC/QA program at the manufacturing plant. Under their direction, the staff laboratory technicians test the following physical properties:

Testing frequencies for ParaWeb™ High strength geogrids

Property	Units	Test Method	Frequency
Tensile strength	kN	ISO 10319:2008	TPS[1]
Elongation	%		
Mass per unit Length	Kg/100m	Internal test method	TPS[1]
Product width	mm	Internal test method	TPS[1]
Length	Metres	Internal test method	TPS[2]

[1] *TPS = 3 - times per Shift*
[2] *TPS = Once per Shift*

RECORD KEEPING AND DOCUMENT CONTROL

All quality assurance data is maintained on the computer databases, making historical information easily accessible. Data acquisition programs ensure minimal data entry error. Procedures are maintained for the identification, collection, indexing, filing, storage maintenance, and disposition of all records.

Third party lab testing is performed when required to ensure quality.

PACKAGING

Completed coils are palletized and stretch wrapped as per the customer requirements. Each coil has a label applied with appropriate information in order to facilitate product identification. Using this information, we are able to trace the ParaWeb back to the raw materials used during production and the time and date the roll was produced.

All packaging processes are done in accordance with written procedures and/or packaging specifications.

CERTIFICATION

Linear Composites Limited can provide certification letters for finished and delivered product when requested by the customer. The standard certification includes a letter of certification covering the product shipped on a particular bill of lading. Actual QC test data for specific coils can be provided at the time of shipment, when requested. Requests for letters of compliance and certifications should be addressed to Commercial Dept.

REFERENCES

- ‘Process Control – ParaWeb Extrusion’, *Linear Composites (Internal Work Instruction).*
- ‘Statistical Process Control ’, *Linear Composites (Internal Work Instruction).*
- ‘Test Manual’, *Linear Composites (Internal Work Instruction.)*

Linear COMPOSITES Manufacturers Quality Control for Linear Composites Limited - ParaWeb

4.1.3 CONNECTION MANUFACTURE QUALITY CONTROL

No attachments

© Stone Strong Systems

4.2.1 CONSTRUCTION QUALITY CONTROL

Specifications for Precast Modular Retaining Wall System

© Stone Strong Systems

note to user – This is a draft specification that should be edited and revised to reflect the specific conditions of a project as well as local practices and locally available materials. The draft specification provides general guidance and specific provisions may vary based on site conditions or project requiremnts. This draft specification should not be taken as a minimum or best practice standard.

STONE STRONG SYSTEMS

SPECIFICATIONS FOR PRECAST MODULAR BLOCK RETAINING WALL SYSTEM

(revised 3/23/20)

PART 1: GENERAL

1.01 Description

A. Work includes furnishing and installing precast modular blocks (PMB) to the lines and grades shown on the plans and as specified herein. Also included is furnishing and installing appurtenant materials required for construction of the complete system.

B. The contractor is solely responsible for safety. The Engineer and Owner shall not be responsible for means or methods of construction or for safety of workers or the public.

1.02 References

note to user – ASTM methods are presented w/ AASHTO comparable methods. Either set of methods may be deleted, as appropriate, for a given project

A. ASTM - American Society for Testing and Materials (AASHTO - American Association of State and Highway Transportation Officials)

B. ASTM C33 - Standard Specification for Concrete Aggregates (AASHTO M43)

C. ASTM C39 - Standard Test Method for Compressive Strength of Cylindrical Concrete Specimens (AASHTO T22)

D. ASTM C136 - Standard Test Method for Sieve Analysis of Fine and Coarse Aggregate (AASHTO T27)

E. ASTM C1776 - Standard Specification for Wet-Cast Precast Modular Retaining Wall Units

F. ASTM D4318 - Standard Test Methods for Liquid Limit, Plastic Limit, and Plasticity Index of Soils (AASHTO T89 & T90)

G. ASTM D698 - Standard Test Method for Laboratory Compaction Characteristics of Soil Using Standard Effort (AASHTO T99)

H. ASTM D4632 - Standard Test Method for Grab Breaking Load and Elongation of Geotextiles

I. ASTM D4595 - Standard Test Method for Tensile Properties of Geotextiles by the Wide-Width Strip Method

J. ASTM D5262 - Standard Test Method for Evaluating the Unconfined Creep Behavior of Geosynthetics

K. ASTM D6637 - Standard Test Method for Determining Tensile Properties of Geogrids by the Single or Multi-Rib Tensile Method

L. ASTM D6638 - Standard Test Method for Determining Connection Strength Between Geosynthetic Reinforcement and Segmental Concrete Units (Modular Concrete Blocks)

M. ASTM D6916 - Standard Test Method for Determining the Shear Strength Between Segmental Concrete Units

1.03 Submittals

note to user – edit submittal requirements based on type of design and other project features

A. If a complete design is not depicted in the plans, submit for review shop drawings for the retaining wall system prepared by a Professional Engineer registered in the state where the project is located. The shop drawings shall indicate the layout, height, and construction details of the retaining wall system. Design shall conform to relevant requirements and design methodologies of AASHTO Standard Specifications for Highway Bridges. Upon request, design calculations shall also be submitted. Minimum safety factors for design shall be as follows:

note to user – edit safety factors for specific project requirements, including conformance w/ AASHTO spec if required. Safety factors are not applicable to LRFD design.

	Gravity Wall	Geosynthetic Reinforced Wall
Sliding	1.5	1.5
Overturning	1.5	2.0
Bearing	2.0	2.0

B. If stain will be applied to the wall system, a sample shall be stained on site for review and approval by the Engineer. The color sample may be part of the completed wall, but shall be located in an inconspicuous area.

C. If an alternate geosynthetic reinforcement is included in the contractor's design, submit manufacturer's literature and test data for geosynthetic to be used in the reinforced wall system. Test data shall include connection strength data for geogrid with Stone Strong modular units determined in accordance with ASTM D6638, as well as geogrid tensile strength and creep data in accordance with ASTM D4595 and ASTM D5262.

D. Submit grain size test results for aggregates to be used for the wall base and for unit fill.

E. Submit test results on borrow material to be used for common backfill and for select backfill (if used) including Proctor and grain size or Atterberg limits results.

1.05 Delivery, Storage, and Handling

A. Contractor shall check the materials upon delivery to assure that proper materials have been received.

B. Contractor shall protect the materials from damage. Damaged material shall not be incorporated into the wall or the reinforced soil embankments.

C. Contractor shall prevent excessive mud, concrete, adhesives and other substances that may adhere from coming in contact with the materials.

D. Exposed faces of precast modular block units shall be reasonably free of chips, cracks, or stains when viewed from a distance of 10 feet.

PART 2: MATERIALS

2.01 Wall Units

A. Precast modular blocks shall be Stone Strong units manufactured under license from Stone Strong LLC.

B. Wall units shall conform to ASTM C1776.

C. Dimension tolerances for precast modular blocks shall be +/- 1/8 inch for height, +/- 1/8 inch for length (along face), and +1/2 to -1/4 inch for width (face to tail).

note to user – entrained air content may be adjusted based on exposure conditions (based on ACI 318) and on local practice or local agency specifications

D. Concrete for precast modular blocks shall have a minimum 28-day compressive strength of 4,000 psi. Entrained air content shall be between 5 and 7%.

E. Internal unit reinforcement or unreinforced units shall be provided according to published Stone Strong engineering guidance. Reinforced units shall be marked with the type of reinforcement.

F. The face pattern shall be selected from the manufacturer's standard molds. The color of the units shall be natural gray. A concrete stain may be field applied to color the units if specified by the Engineer or Owner.

2.02 Geosynthetic Reinforcement

note to user – this may be omitted if no geosynthetic reinforcement is included in the design, and the Paraweb or geogrid section may be deleted if it is not applicable

A. Geosynthetic strap reinforcement shall be Paraweb 2D-50 manufactured by Maccaferri, Inc.

B. Geogrid reinforcement shall be SF55 or SF110 manufactured by Synteen Technical Fabrics, Inc.

C. Substitution of a different type of geosynthetic shall not be allowed unless approved of the Architect/Engineer or Owner after submittal of shop drawings and test data.

2.03 Wall Base

note to user – aggregate type and gradation should be adjusted for locally available materials, consistent with the design. Wall base should generally be a well graded aggregate with a maximum size from 1" to 1½". Materials with a max size as small as ¾" and as large as 2½" may be acceptable at the discretion of the engineer. Recycled concrete aggregate may also be used subject to acceptable gradation, and cracked gravel may be acceptable in some cases. Screened aggregate, such as 57 stone, may be acceptable subject to drainage and other considerations. Some agencies may specify a concrete base. The design should account for the properties of the material specified – see design methodology documents.

A. The wall base shall consist of dense graded crushed aggregate. A minimum of 75% of coarse material shall have 2 or more fractured faces. Wall base material shall meet the following gradation:

US Standard Sieve Size	Percent Passing

1-1/2”	80-100
3/4"	50-90
#4	0-40
#200	0-10

B. The contractor may substitute concrete with a minimum 28-day compressive strength of 3,000 psi for the granular base material. Concrete may be placed full thickness or as a topping over a compacted granular the base. If used as a topping, the concrete shall have a minimum thickness of 3 inches.

2.04 Unit Fill

note to user – aggregate type and gradation should be adjusted for locally available materials, consistent with the design. 57 stone is commonly used for unit fill, and this gradation usually conforms w/ the draft gradation below (although this gradation also allows for coarser materials as well). Unit fill should generally be a screened aggregate with a maximum size around ¾” to 1½”. Materials with max size up to 2½” may be acceptable at the discretion of the engineer. Gradation requirements are sometimes replaced with a reference to 57 stone according to ASTM C33. Recycled concrete aggregate may also be used subject to acceptable gradation, and cracked gravel may be acceptable in some cases. A well graded aggregate is not desirable for unit fill. Rather, the material should be coarse graded so that it will spill into and fill the voids within the blocks and will be free draining. The critical sieve sizes are the #4 sieve to limit loss through the block joints and a limit on the fines (less than 2% minus #200 sieve, but a larger sieve may be used as a proxy for fines) to maintain a free draining condition. The design should account for the properties of the material specified if the gradation varies significantly from below – see design methodology documents.

A. Unit fill shall consist of a screened crushed aggregate. A minimum of 75% of coarse material shall have 2 or more fractured faces. Unit fill material shall meet the following gradation:

US Standard Sieve Size	Percent Passing
1-1/2”	100
3/4"	50-90
#4	0-10
#8	0-5

2.05 Backfill

note to user – edit acceptable backfill to reflect on-site or select backfill as appropriate. Backfill properties must be consistent with design assumptions.

A. If a select granular reinforced zone is indicated, it shall consist of fill sand or other clean aggregate meeting the following gradation:

note to user – edit gradation for locally available materials, or replace w/ reference to DOT or ASTM gradation

US Standard Sieve Size	Percent Passing
3/4"	100
#200	0-5

note to user – edit properties of on-site soil or borrow based on local conditions/practices

B. All other backfill behind and in front of the wall shall consist of suitable on-site soil or imported borrow and shall be approved by the Geotechnical Engineer. Backfill shall generally consist of sands, silts, or lean clays with a liquid limit less than 45 and a plasticity index less than 20. Fat clay soils, cobbles, and large rock should generally be avoided

unless approved by the Geotechnical Engineer based on local practices. Frozen soils, excessively wet or dry soils, debris, and deleterious materials should not be used.

2.06 Drain Tile

note to user – drain tile may be omitted at the discretion of the engineer where ground water is not expected and weeping through the face joints will be sufficient to prevent buildup of hydrostatic pressure

A. Drain tile shall be a perforated or slotted PVC or corrugated HDPE pipe. The drain tile should be connected to storm drains or daylighted at low points and/or periodically along the wall alignment as shown on the plans.

2.07 Geotextile Fabric

note to user – for gravity walls, a geotextile filter may be included when seepage from the backfill zone (due to high water table, inundation, etc) is expected to foul the drainage aggregate inside the units or where separation from the backfill zone is required for other reasons. Geotextile may be deleted in other cases at the discretion of the engineer. In most cases, this section may be deleted.

A. Provide a geotextile filter for separation from backfill at the tails of the blocks. The geotextile shall be a needle punched non-woven fabric with a minimum grab tensile strength of 120 pounds. The geotextile may cover the entire back face of the blocks or may be cut in strips to cover the gaps between tail units with a minimum of 6 inches of overlap over the concrete tail on both sides.

2.08 Concrete for Tail Extensions

note to user – this may be omitted if no cast in place tail extensions are included in the design

A. Concrete for tail extensions shall have a minimum 28-day compressive strength of 3,000 psi. Higher mix strength may be necessary to achieve a strength of 2,000 psi before the wall is backfilled above the level of the tail extension.

B. Concrete shall have entrained air content between 5% and 7%.

PART 3: EXECUTION

3.01 Excavation

A. Excavate as required for installation of the retaining wall system. Excavate to the base level for a sufficient distance behind the face to permit installation of the base.

B. Slope or shore excavation as necessary for safety and for conformance with applicable OSHA requirements.

3.02 Wall Base

A. Foundation soils shall be excavated to the dimensions shown on the plans. Foundation soil shall be observed by the Geotechnical Engineer to confirm that the bearing soils are similar to the design conditions or assumptions.

B. Construct the wall base to the lines and grades shown on the plans. Place and consolidate concrete, strike, and finish plane and level. Overexcavated areas shall be filled with additional concrete or granular base material. Compact granular base material to provide a hard and level surface to support the wall units. Base material shall be compacted to a

minimum of 95 percent of the maximum dry density (ASTM D698, Standard Proctor). Final base elevation shall be within 0.1 feet of plan elevation.

C. Prepare and smooth the granular material to ensure complete contact of the first course with the base. The base may be dressed with fine aggregate to aid leveling.

3.03 Unit Installation

A. Place the first course of units directly on the wall base. Check units for level and alignment. Units shall be within 1/8 inch of level from end to end and from front to back. Adjacent units should be in contact. If possible, begin placing units at the lowest section of the wall.

B. Fill all voids between and within the blocks with granular unit fill. Additional unit fill is not required behind the units, but may be placed for the convenience of the contractor.

C. Place backfill behind the units in maximum loose lifts of 8 inches and compact. Compact all backfill to a minimum of 95 percent of the maximum dry density (ASTM D698, Standard Proctor). For cohesive soils, the moisture content at the time of compaction should be adjusted to within -2 and +3 percent of optimum. Place backfill in successive lifts until level with the top of the facing unit.

D. Remove all excess aggregate and other materials from the top of the units before laying up the next course.

note to user – for a geogrid reinforced wall, delete the following sections on Paraweb installation

E. For Paraweb reinforced walls, place the correct Paraweb strap at the locations and elevations shown on the plans or the shop drawings. Paraweb reinforcement shall be placed horizontally on compacted backfill in a V-layout. The length of the Paraweb is measured from the embedded connector in the back of the facing unit. Wrap the Paraweb strap around the embedded connector at the point of the V-shaped strap layout. Paraweb straps may be spliced following the manufacturer's guidance.

F. Ends of the Paraweb straps shall be staked or held in place. Slack shall be removed from straps using an approved method.

G. Do not operate equipment directly on the Paraweb straps. A minimum backfill depth of 6 inches should be placed before operating equipment over the reinforcing straps.

note to user – for a Paraweb reinforced wall, deleted the following sections on geogrid installation

H. For geogrid reinforced walls, place the correct geogrid at the locations and elevations shown on the plans or the shop drawings. Geogrid reinforcement shall be placed horizontally on compacted backfill. The length of the geogrid is measured from the front face of the wall. Extend the grid onto the front face flange of the facing unit. Orient the geogrid with the strong axis (machine direction) placed perpendicular to the wall face. Geogrid shall not be spliced by any means in the roll direction.

I. Geogrids shall be placed side by side to provide complete coverage along the wall face. No overlap is required between adjacent grids on straight sections of the wall. On convex curves, place a minimum of 3 inches of backfill material between overlapping geogrid layers.

J. Pull geogrids taught and stake or hold the loose end in place before placing the next course of backfill. Backfill shall be placed, spread, and compacted in such a manner that

minimizes the development of wrinkles in the geogrid and/or movement of the geogrid. Do not operate equipment directly on the geogrid. A minimum backfill depth of 6 inches should be placed before operating equipment over the grids.

note to user – edit setbacks if a vertical face is intended

K. Place the next course of precast modular block units in running bond with the previous course. Place the web recess over the alignment hoop protruding from the unit below, and pull the unit forward to contact the hoop. Batter should be within ¼ inch tolerance (4 inches from 24 SF unit below, 2 inches from 6 SF unit below).

L. Continue placing successive courses to the elevations shown on the plans. Construct wall in level stages, placing the units at each course for the entire length of the wall, if possible. Unit fill and backfill should be placed to the level of the top of the facing unit before placing the next course.

M. Provide temporary swales to divert runoff away from wall excavation and away from face.

N. Final grade above and below the retaining wall shall provide for positive drainage and prevent ponding. Protect completed wall from other construction. Do not operate large equipment or store materials above the wall that exceed the design surcharge loads.

note to user – edit if alternate connection is used, including steel reinforcement into voids, or delete if tail extensions are not used

O. Where tail extensions are indicated on the plans, concrete shall be placed in a continuous placement inside the side voids between the blocks extending to the minimum width behind the blocks indicated on the drawings. Tail extensions may formed or may be placed directly against a cut embankment. Tail extensions should be placed in lifts not to exceed 4½ feet until the previous lift has fully set. The tail extension should be allowed to reach 2,000 psi compressive strength before backfill is placed above the top of the extension.

PART 4: CONSTRUCTION QUALITY CONTROL AND ASSURANCE

4.01 Construction Quality Control

A. The contractor is responsible to ensure that all installation and materials meet the quality specified in the construction drawings.

B. The contractor shall verify that installation is in accordance with the specifications and construction drawings.

4.02 Quality Assurance

A. The owner is responsible to engage testing and inspection services to provide independent quality construction assurance.

B. Compaction testing shall be done a minimum of every 1 foot of vertical fill and every 100 lineal feet along the wall.

C. Testing shall be done at a variety of locations to cover the entire backfill zone.

D. The independent inspection professional should perform sufficient testing and observation to verify that wall installation substantially conforms to the design drawings and specifications.

END OF SECTION

5.1.1 SYSTEM DEVELOPMENT AND USAGE

No attachments

© Stone Strong Systems

5.1.2 OLDEST THREE STRUCTURES

No attachments

© Stone Strong Systems

5.1.3 TALLEST THREE STRUCTURES

No attachments

© Stone Strong Systems

5.1.4 AGENCY/OWNER APPROVALS

No attachments

© Stone Strong Systems

6.1 OTHER INFORMATION

No attachments

© Stone Strong Systems

STONE STRONG SYSTEMS®

What is it that makes Stone Strong Systems the best block in precast? In a word — everything. In a constantly evolving retaining wall industry, challenges arise not only in finding innovative solutions, but also in finding ways around rising production costs and labor shortages. Finding a reliable solution to these obstacles can be a challenge for producers, designers, and installers. Fully engineered both structurally and geotechnically, Stone Strong delivers intelligent retaining wall solutions that are not only proven, but also reduce installation time, labor, and production costs.

SIMPLE

Lift/alignment loops ensure blocks interlock precisely and align units for consecutive level courses. Stone infill securely locks blocks together without any mechanical assistance.

ROBUST

24-square-foot block reduces labor costs and installation time, while its sheer size and weight provides structural strength without any need for tie-backs or additional mechanics.

EFFICIENT

Less weight per square foot translates into reduced transportation cost and a much faster, easier, and less costly installation. — install 1,500 square feet of block a day with just a three-man crew.

INNOVATIVE

Innovative hollow design makes Stone Strong the only wall system in the industry to feature a fully integrated drainage system requiring no additional parts or labor.

STONE STRONG SYSTEMS®

SMALLER FOOTPRINT
Avoid utility and property line issues while still meeting your project goals

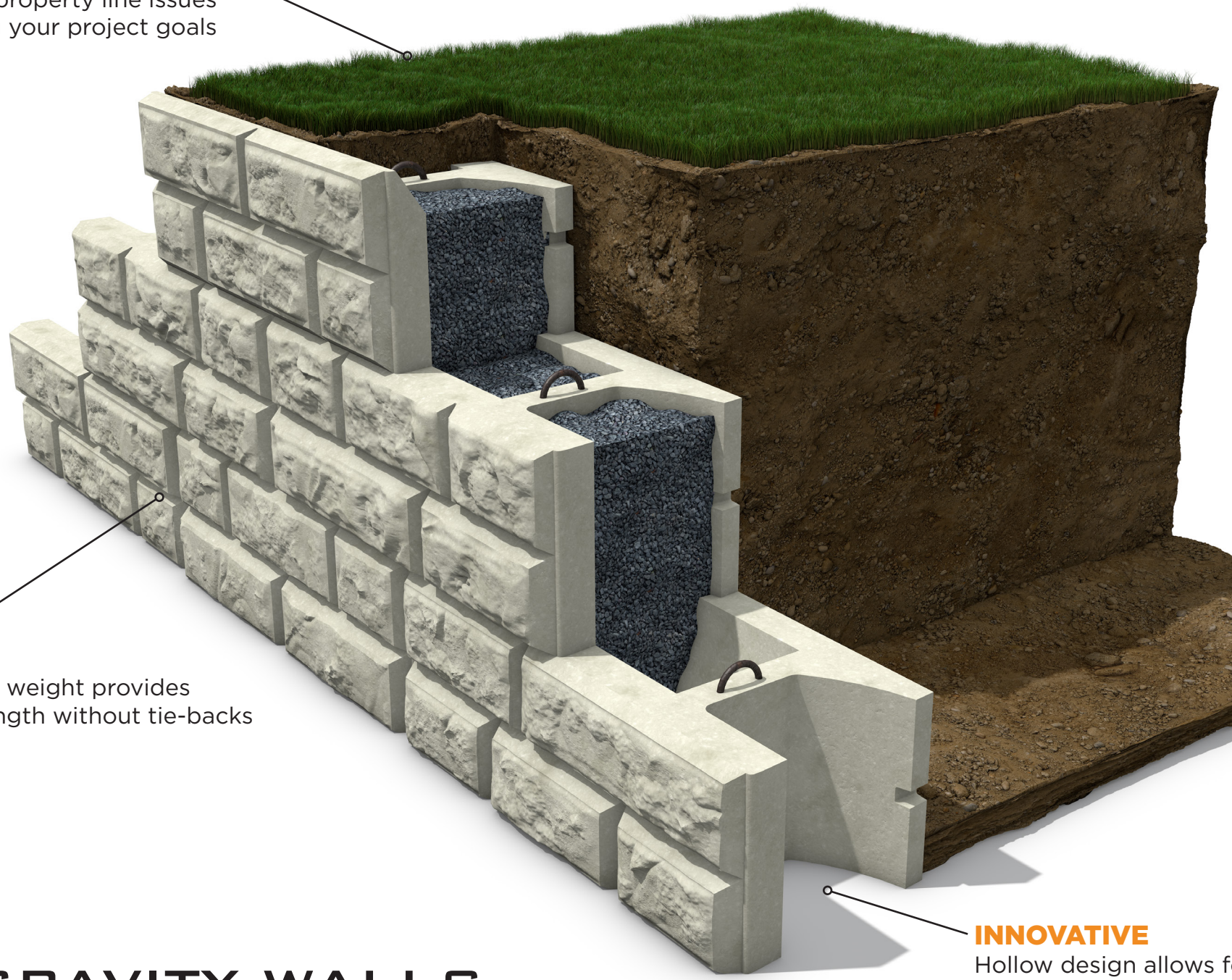

SOLID
Sheer size and weight provides structural strength without tie-backs

INNOVATIVE
Hollow design allows f
rapid, built in
age

GRAVITY WALLS

Positive Connection

Geosynthetic polyester yarn bundles encased in durable polyethylene sheath
Rough surface develops excellent friction

Conforms to AASHTO standards
100 year wall design life

Resistant to corrosion
Higher pH range tolerance makes it more resilient than traditional steel straps

Simple, easy to use system
Ability to use a wider variety of fills not compatible with steel reinforcement or geo-grid

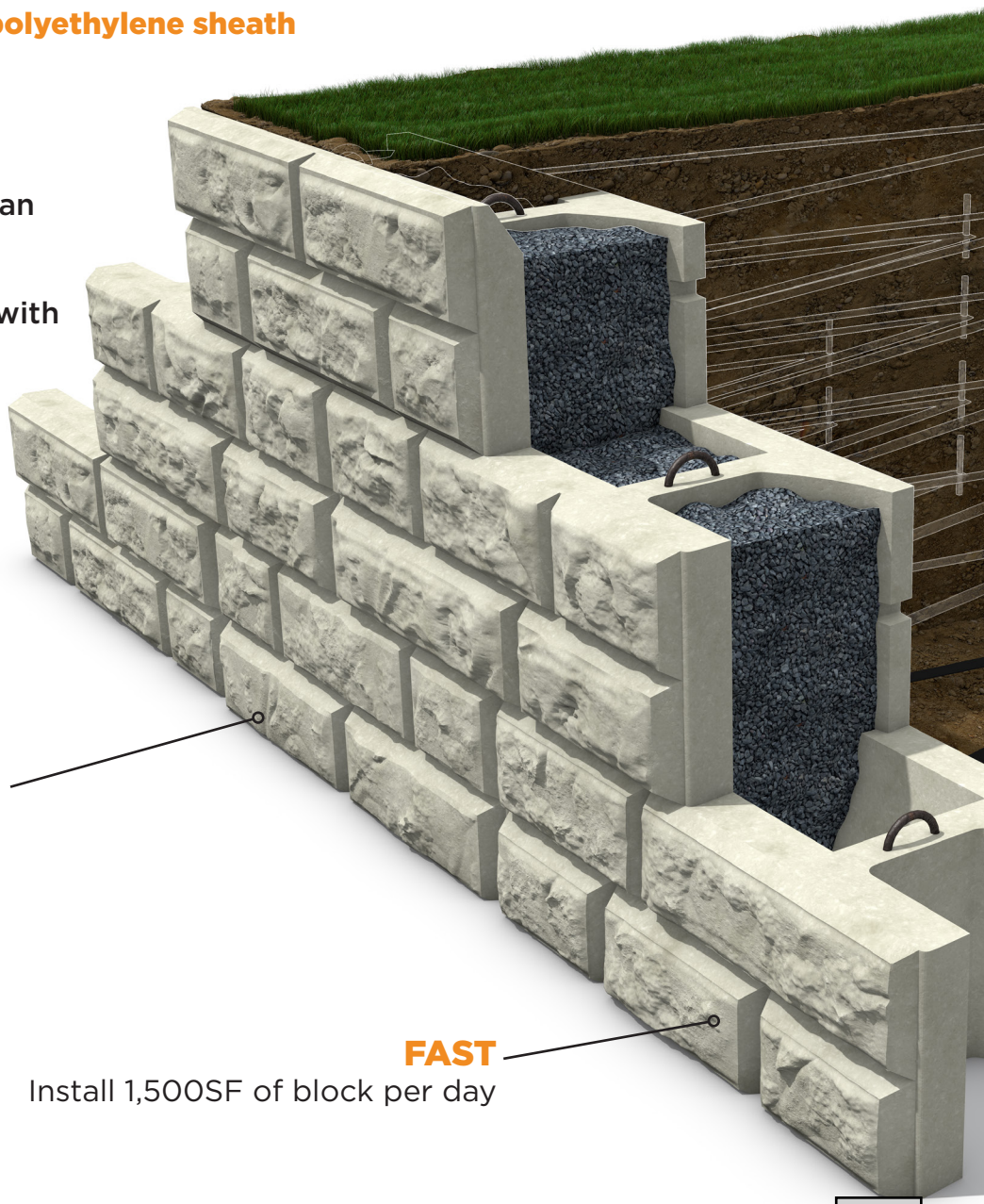

STRONG
Precast Concrete - Minimum 4,000PSI means a less permeable product

FAST
Install 1,500SF of block per day

or

MSE WALLS

"The most complete retaining system on the market today"

- Gordon Stevens P.E.

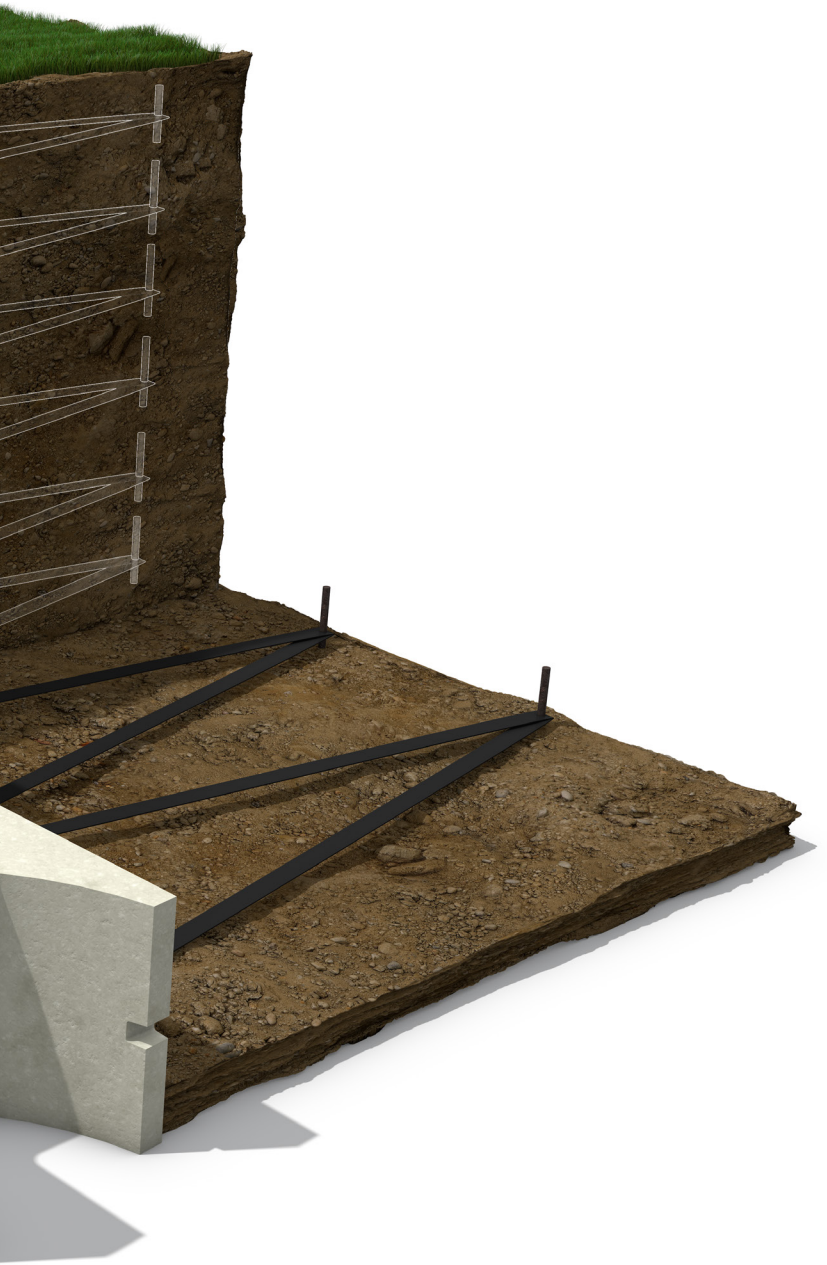

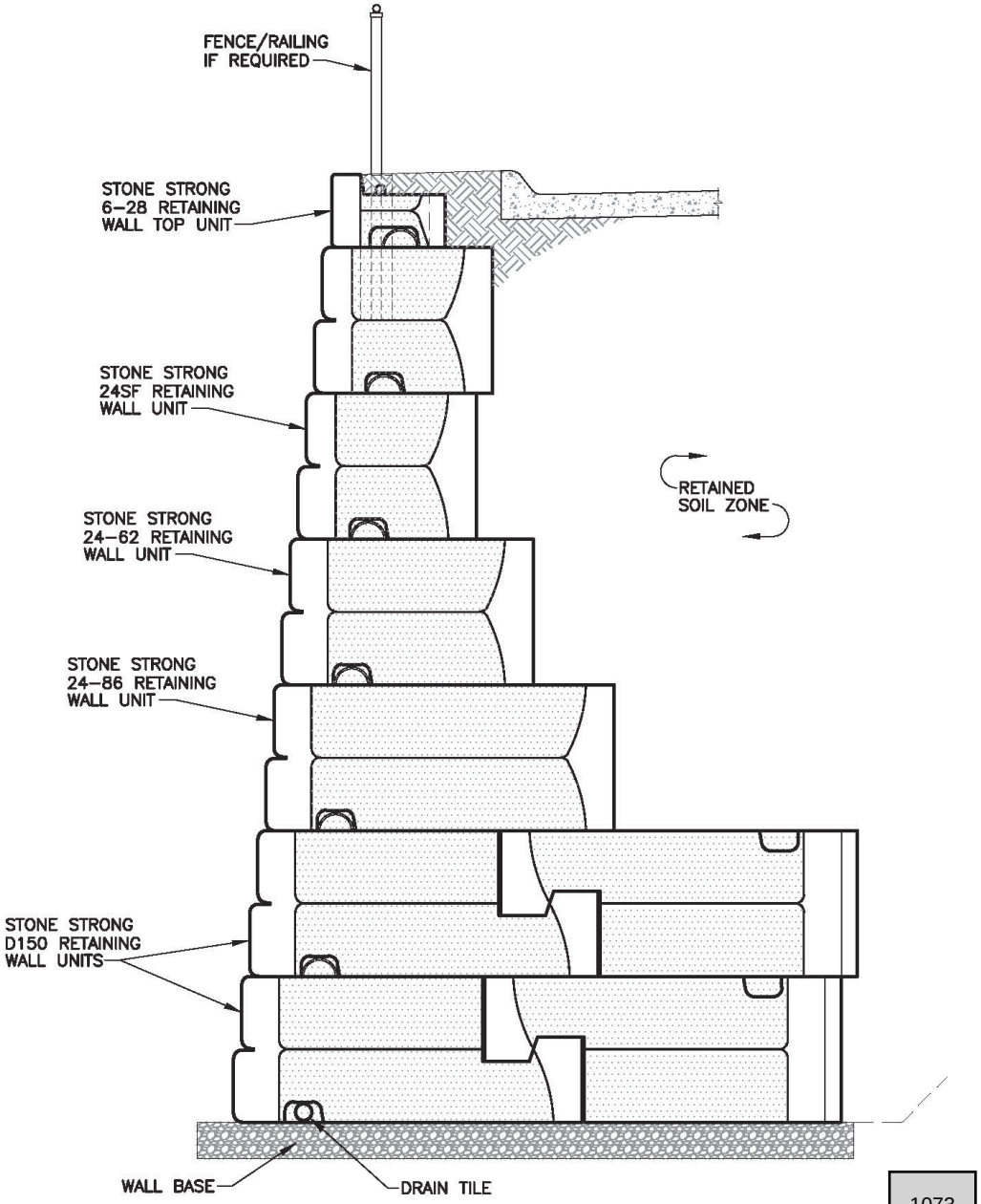

EFFICIENT
Unique design means
reduced transportation costs

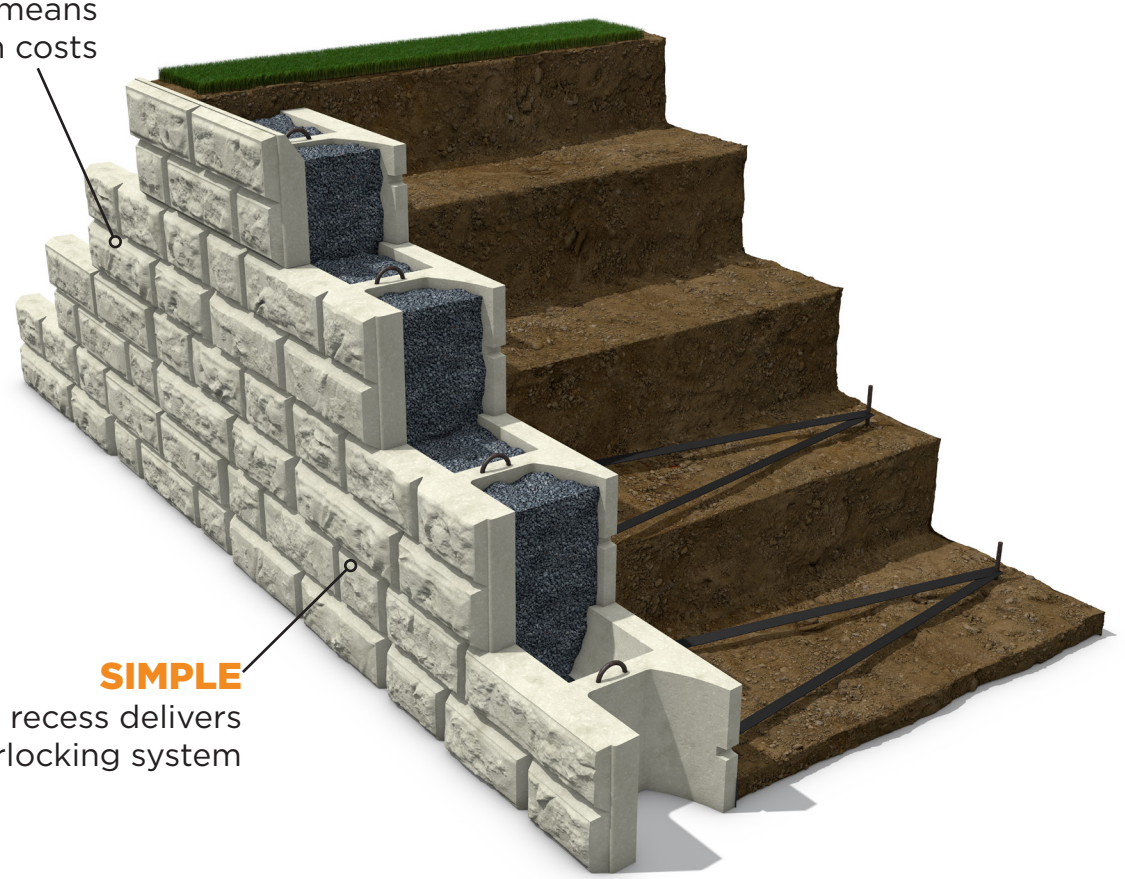

SIMPLE
Stack and go. Built in recess delivers
coherent interlocking system

HYBRID WALLS

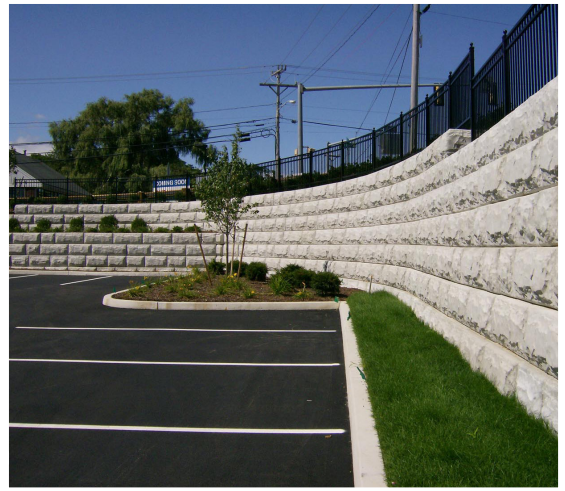

STONE STRONG SYSTEMS®

COMPACT AND OPERATE DIRECTLY BEHIND ANY WALL

The mass in each modular block helps resist deflection - allowing compactors and other heavy equipment to operate immediately behind the back of the units. By compacting to the back of the unit, Stone Strong Systems avoids the built-in defect small block systems have with backfill.

Project: Pokono Bridge Abutment

Location: Pokono, New Zealand

The biggest and most innovative precast block in the industry is also the easiest to work with. Stone Strong Systems' fully and intelligently engineered block technology allows for a lighter, interlocking block that greatly reduces installation time and labor costs — with unmatched safety, durability and aesthetics.

RESIDENTIAL

Make impossibly hard projects impossibly easy –
Stone Strong Systems' tapered block edges provide the versatility needed to contour to any landscape, including straight, convex, concave and circular designs.

COMMERCIAL

Big-time projects demand big-time blocks –
Stone Strong Systems' gravity walls are capable of heights in excess of 20 feet. Meanwhile, with proper engineering and reinforcement, Stone Strong MSE walls have topped 50 feet.

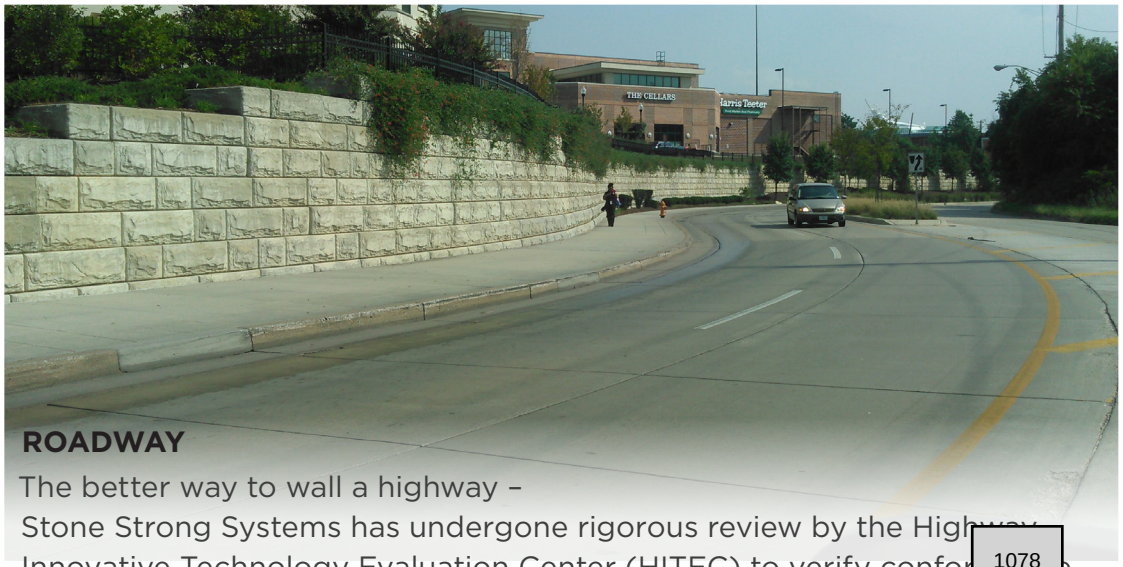

ROADWAY

The better way to wall a highway –
Stone Strong Systems has undergone rigorous review by the Highway Innovative Technology Evaluation Center (HITEC) to verify conformance with AASHTO standards and specifications. Meets DOT approval.

BRIDGES

An efficient system for efficient bridges -
Stone Strong Systems conforms to the AASHTO Bridge Manual, insuring you are building with a fully geotechnical and structurally engineered retaining wall system.

CHANNELS

Innovative hollow design -
makes Stone Strong the only wall system industry to feature a fully integrated drainage system requiring no additional parts or labor.

SHORELINE

A more resilient system -
With a 100 year design life, even in water applications, Stone Strong Systems provides a product that is not only simple but extremely reliable as well.

SIMPLE
RELIABLE
ROBUST
INNOVATIVE

1079

BIG. BEAUTIFUL. FULLY CUSTOMIZABLE.

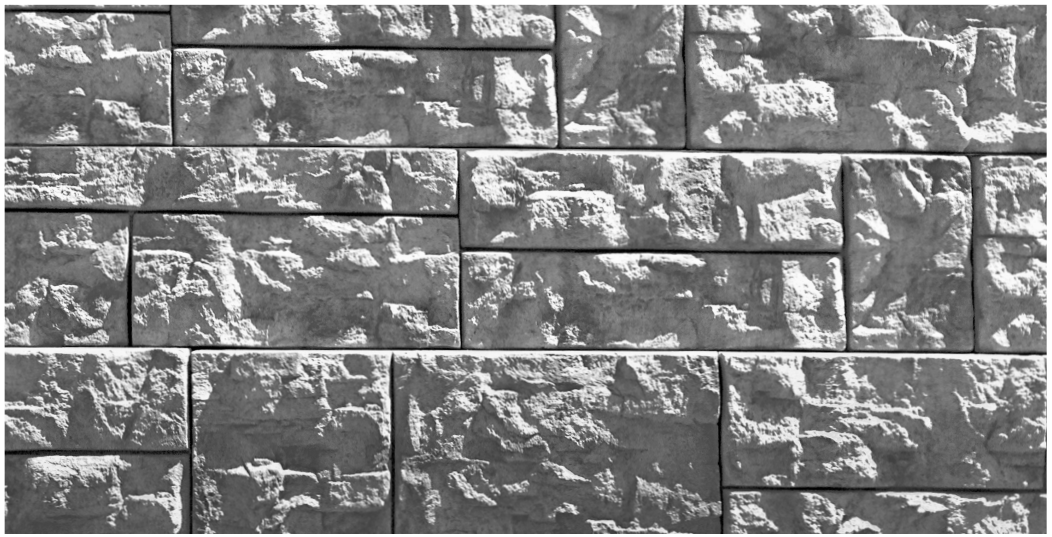

FRACTURED LEDGE

Created from authentic fractured ledge stone, the highly defined pattern offers the most natural look to match any application.

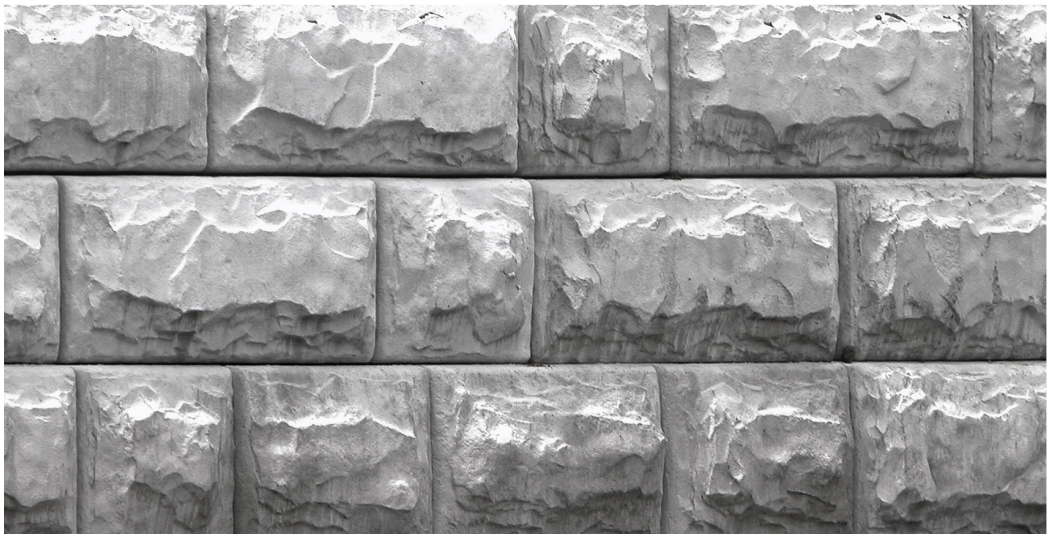

CHISELED GRANITE

Derived from blocks hand-chiseled by artisans, the pattern is intended to match the classic look of natural, chiseled stone.

Every Stone Strong block features a realistic, fully customizable, chiseled-stone facade handcrafted by real artisans. With the optio
stained to match any color imaginable, Stone Strong blocks fit naturally and seamlessly into any design or landscape.

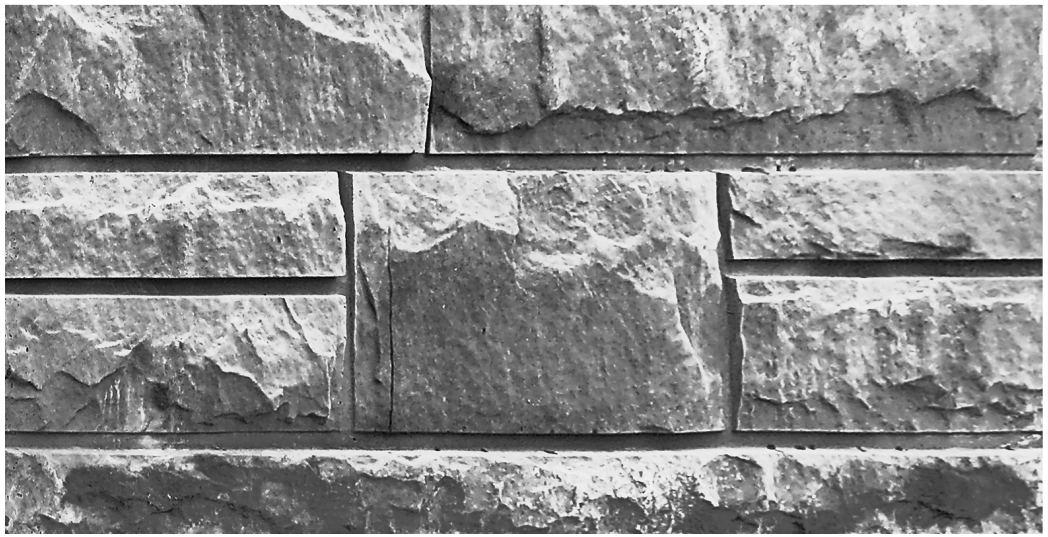

TENNESSEE FOOTHILLS

Sharp and well defined, the pattern was developed by laser-mapping retaining walls in the Smoky Mountains from the 1940's.

POTOMAC

Smooth and broken up, this pattern was produced to replicate original cobblestone from colonial East Coast cities.

THE BUILDING BLOCKS OF INNOVATION.

Comprised of more than a dozen fully engineered blocks, components and accessories, Stone Strong Systems combines the flexibility to accommodate any retaining wall project — large or small — with unmatched safety, durability and aesthetics. Every block is manufactured to product specifications to assure uniform weight, dimensional tolerance and strength. Unlike other brands, returned concrete is never used for Stone Strong blocks. Not to mention, every block is produced with air-entrained 4,000PSI concrete for added protection in the most harsh environments.

24-44
Face 8′ x 3′, Width 44″

The 24 SF Block contributes to the speed of installation. A small crew and a couple pieces of equipment can install 1,500 SF a day.

24-86
Face 8′ x 3′, Width 86″

Setting the standard for tall gravity walls. At 22.5′, it can go vertical with no tie-back.

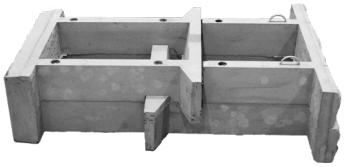

D150 ASSEMBLY
Face 8′ x 3′, Width 172″

For even taller gravity walls. Using the D150 block assembly, gravity walls can reach heights in excess of 50 feet

24-62
Face 8′ x 3′, Width 62″

Build walls up to 18′ tall with no tie-back.

24-MASS EXTENDER
Face 8′ x 3′, Width 56″

The addition of the extender to the 24 SF Block provides for greater gravity wall heights.

6-44
Face 4′ x 18″, Width 44″

The 6 SF Block allows for tighter turning radius, wall steps at 18″ increments and vertical and horizontal adjustments. Also includes a top block with recess.

6-28
Face 4′ x 18″, Width 28″

A perfect solution for smaller walls, get up to 60 pieces per truckload. Easy to move around on-site with a skid loader or mini-excavator.

ACCESSORY BLOCKS

TOP BLOCKS

Top Blocks come in 24SF and 6SF options. A recess at the top of the face to allow for multiple finish options.

DUAL FACE

Face 8′ x 18″, Width 28″

The Dual Face Block provides for above-grade applications.

CAP BLOCKS

The cap block provides a top of wall finish alternative to the top block and dual face block

END / CORNER

Face 4′ x 18″, Width 2′

The End / Corner Block is used for 90° turns and for end finish treatments.

45°

Face 4′ x 18″ x 8.25″

The 45° Block provides for inside and outside 45° turns.

3-44

Face 2′ x 18″, Width 44″

The 3 SF Block allows the wall to stay on running bond.

OUTSIDE CORNER

Multiple face sizes

Provides outside 45° turns in both vertical and battered configurations.

INSIDE CORNER

Multiple face sizes

Provides inside 45° turns in both vertical and battered configurations.

90°

Face 4′ x 18″, Width 4′

The 90° Block provides for inside and outside 90° turns.

Project: Mingha Bluff Realignment

Location: Arthurs Pass, New Zealand

Blocks: 24-44 & Custom Corbel Block

STONE STRONG SYSTEMS®

PHONE 402.973.1292 **T-FREE** 877.501.5652 **WEB** stonestrong.com

Tulmark, LLC.
Geotechnical & Environmental Services
"We Investigate Underground Soil & Water Conditions for Engineering & Environmental Purposes"
Tulmark.com

P.O. Box 12, Leonardo, N.J., 07737
(732) 291-5030

Home & Land Development
32 & 14 North Peak Street
Highlands, N.J.

7/19/2024

Re: 32 & 14 North Peak St., Highlands, N.J.; Soil Bearing Capacity Determination.

Dear Mr. Farkouh:
On 7/19/2024 Tulmark, LLC completed 8 soil borings in order to accomplish **Standard Penetration Tests** (SPT's) using the **Meyerhof Bearing Capacity Theory Based on Standard Penetration Test (N) Values** to determine soil bearing capacity for a retaining wall at burial depths indicated in drawing from Garden State Precast. Groundwater was not detected in any of the soil boring locations.

Soil Boring (B-1)

Depth Feet	Allowable Soil Bearing Capacity Lbs./Sq. Ft.	Blow Counts	USCS	Depth to Ground Water ft.
1	2,211.	20	SM	None
2	2,101.	19	SM	None
3				
4				
5				
6				
7				
8				
9				
10				

USCS = Unified Soil Classification System

Soil Boring (B-2)

Depth Feet	Allowable Soil Bearing Capacity Lbs./Sq. Ft.	Blow Counts	USCS	Depth to Ground Water ft.
1	-	Auger	SM	None
2	-	Auger	SM	None
3	>3,500.	39	SM	None
4	>3,500.	40	SM	None
5				
6				
7				
8				
9				
10				

USCS = Unified Soil Classification System

Tulmark, LLC.
Geotechnical &
Environmental Services
"We Investigate Underground Soil & Water Conditions for Engineering & Environmental Purposes"
Tulmark.com

P.O. Box 12, Leonardo, N.J., 07737
(732) 291-5030

Soil Boring (B-3)

Depth Feet	Allowable Soil Bearing Capacity Lbs./Sq. Ft.	Blow Counts	USCS	Depth to Ground Water ft.
1	580.	7	SM	None
2	2,101.	19	SM	None
3	>3,500.	34	SM	None
4	>3,500.	34	SM	None
5				
6				
7				
8				
9				
10				

USCS = Unified Soil Classification System

Soil Boring (B-4)

Depth Feet	Allowable Soil Bearing Capacity Lbs./Sq. Ft.	Blow Counts	USCS	Depth to Ground Water ft.
1	415.	5	SM	None
2	884.	8	SM	None
3	1,106.	8	SM	None
4	3,317.	20	SM	None
5	3,676.	19	SM	None
6				
7				
8				
9				
10				

USCS = Unified Soil Classification System

Tulmark, LLC.
Geotechnical & Environmental Services
"We Investigate Underground Soil & Water Conditions for Engineering & Environmental Purposes"
Tulmark.com

P.O. Box 12, Leonardo, N.J., 07737
(732) 291-5030

Soil Boring (B-5)

Depth Feet	Allowable Soil Bearing Capacity Lbs./Sq. Ft.	Blow Counts	USCS	Depth to Ground Water ft.
1	1,078.	13	SM	None
2	2,764.	25	SM	None
3				
4				
5				
6				
7				
8				
9				
10				

Soil Boring (B-6)

Depth Feet	Allowable Soil Bearing Capacity Lbs./Sq. Ft.	Blow Counts	USCS	Depth to Ground Water ft.
1	2,073.	25	SM	None
2				
3				
4				
5				
6				
7				
8				
9				
10				

Tulmark, LLC.
Geotechnical &
Environmental Services
"We Investigate Underground Soil & Water Conditions for Engineering & Environmental Purposes"
Tulmark.com

P.O. Box 12, Leonardo, N.J., 07737
(732) 291-5030

Soil Boring (B-7)

Depth Feet	Allowable Soil Bearing Capacity Lbs./Sq. Ft.	Blow Counts	USCS	Depth to Ground Water ft.
1	2,073.	25	SM	None
2				
3				
4				
5				
6				
7				
8				
9				
10				

Soil Boring (B-8)

Depth Feet	Allowable Soil Bearing Capacity Lbs./Sq. Ft.	Blow Counts	USCS	Depth to Ground Water ft.
1	2,073.	25	SM	None
2				
3				
4				
5				
6				
7				
8				
9				
10				

Tulmark, LLC.
Geotechnical &
Environmental Services
"We Investigate Underground Soil & Water Conditions for Engineering & Environmental Purposes"
Tulmark.com

P.O. Box 12, Leonardo, N.J., 07737
(732) 291-5030

Unified Soil Classification System: (SM) Silty Sand

Each boring log attached to this letter shows all of the SPT's completed and their values. **There is a safety factor of 3 built into the allowable soil bearing capacity calculations.** The information provided in this letter is based on field measurements/information at the depth indicated. This report is nontransferable.

Tulmark suggests reviewing the above calculations with your Architect, or Structural Engineer before installation. This report is valid for 30 days.

If you have any questions, please call Tulmark, LLC. at: (732) 291-5030.

I hereby certify that the information furnished in this letter report (and attachments thereto) is true and accurate.

John C. Tully

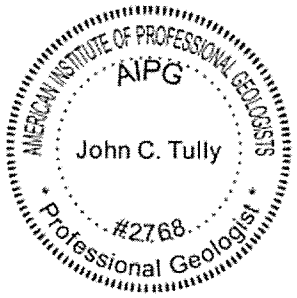

AIPG Professional Geologist #2768

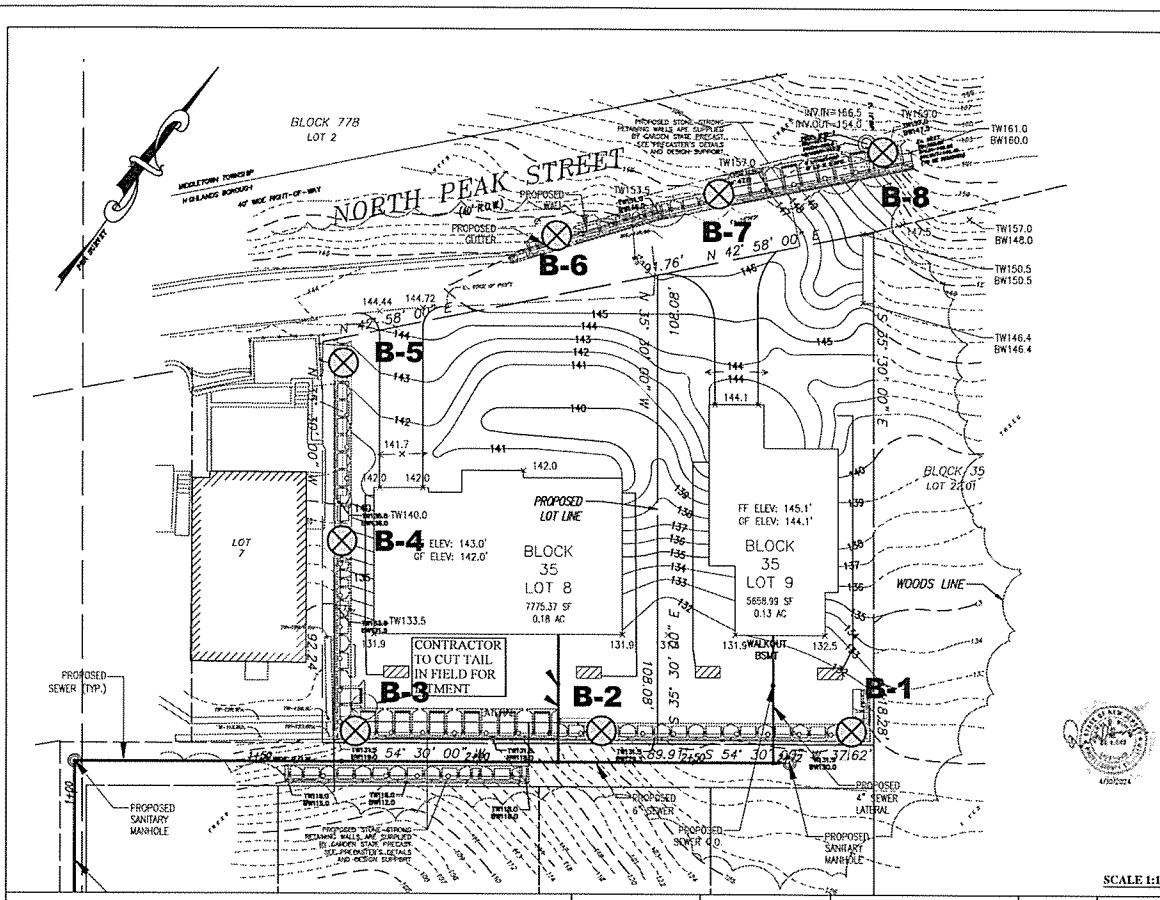

SCALE 1:10

NPCA CERTIFIED PLANT

NORTH PEAK STREET WALL

BLOCKTYPE	BLOCK SQ. FT.	QUANTITY	TOTAL SQ. FT.
S	9	11	99
T	9	2	18
U	3	0	0
V	3	0	0
W	6	6	36
X	6	14	84
Y	24	5	120
Z	24	11	264
Z12	24	7	168
Z86	24	6	144
	TOTAL	62	933

TOP TIER WALL

BLOCKTYPE	BLOCK SQ. FT.	QUANTITY	TOTAL SQ. FT.
S	9	12	108
T	9	12	108
U	3	2	6
V	3	11	33
W	6	11	66
X	6	15	90
Y	24	17	408
Z	24	29	696
Z12	24	9	216
Z86	24	13	312
	TOTAL	131	2043

BOTTOM TIER WALL

BLOCKTYPE	BLOCK SQ. FT.	QUANTITY	TOTAL SQ. FT.
S	9	2	18
T	9	1	9
U	3	0	0
V	3	1	3
W	6	5	30
X	6	4	24
Y	24	4	96
Z	24	7	168
Z12	24	0	0
Z86	24	0	0
	TOTAL	24	348

Garden State PRECAST INC

STONE STRONG WALL OVERLAY AND QTY.

STONE STRONG SYSTEM - GRAVITY RETAINING WALL

HOME & LAND DEVELOPMENT
NORTH PEAK STREET

GARDEN STATE PRECAST
P.O. BOX 702
FARMINGDALE, NJ 07727
732-938-4436
732-938-7096 - FAX

SHEET 3 OF 7

NUMBER	BY	DATE

REVISIONS

UNIFIED SOIL CLASSIFICATION SYSTEM

Name			Group Symbols	LABORATORY CRITERIA			
				Fines (%)	Grading	Plasticity	Notes
coarse grained (more than 50% **larger** than 63 µm BS or No.200 US sieve size (0.074 mm))	**Gravels** (more than 50% of coarse fraction of gravel size)	Well graded gravels, with little or no fines	GW	0-5	$C_u>4$ $1<C_c<3$		Dual symbols if 5-12% fines. Dual symbols if above A-line and 4<PI<7
		Poorly graded gravels, sandy gravels, with little or no fines	GP	0-5	Not satisfying GW requirements		
		Silty gravels, silty sandy gravels	GM	>12		Below A-line ***or*** PI<4	
		Clayey gravels, clayey sandy gravels	GC	>12		Above A-line ***and*** PI>7	
	Sands (more than 50% of coarse fraction of sand size)	Well graded sands, gravelly sands, with little or no fines	SW	0-5	$C_u>6$ $1<C_c<3$		*Reminder* $C_u=\frac{D_{60}}{D_{10}}$ $C_c=\frac{{D_{30}}^2}{D_{10}*D_{60}}$ *PI=LL-PL*
		Poorly graded sands, gravelly sands, with little or no fines	SP	0-5	Not satisfying SW requirements		
		Silty sands	SM	>12		Below A-line ***or*** PI<4	
		Clayey sands	SC	>12		Above A-line ***and*** PI>7	

Name			Group Symbols	LABORATORY CRITERIA
fine grained (more than 50% **smaller** than 63 µm BS or No.200 US sieve size (0.074 mm))	**Silts and Clays** (liquid limit less than 50)	Inorganic **silts**, silty or clayey fine sands, with slight plasticity	ML	Use plasticity chart
		Inorganic **clays**, silty clays, sandy clays of low plasticity	CL	Use plasticity chart
		Organic **silts** and organic silty clays of low plasticity	OL	Use plasticity chart
	Silts and Clays (liquid limit greater than 50)	Inorganic **silts** of high plasticity	MH	Use plasticity chart
		Inorganic **clays** of high plasticity	CH	Use plasticity chart
		Organic **clays** of high plasiticty	OH	Use plasticity chart
Highly organic soils		Peat and other highly organic soils	Pt	Use plasticity chart

Tulmark, LLC.
Geotechnical &
Environmental Services
"We Investigate Underground Soil & Water Conditions for Engineering & Environmental Purposes"
Tulmark.com

P.O. Box 12, Leonardo, N.J., 07737
(732) 291-5030

Environmental Impact Statement

7/17/2024

32 & 14 North Peak Street
North Peak Street
Highlands Township
Monmouth County
New Jersey

Block: 35 Lots: 8 & 9

Completed for: Home & Land Development
88-1 Portland Road
Highlands, N.J.
07732

Table of Contents

A. Project Identification & Description

A1. Project Name

A2. Tax Map Identification

A3. Streets Abutting the Project Site

A4. Current & Proposed Zoning Classification

A5. Present & Proposed Land Use & Current Use of Adjacent Properties

A6. Project Contact Information

A7. Aera of Project Site & Area to Be Disturbed by the Project

A8. Aera of Existing & Proposed Roadways

A9. Number Square Footage & Function of Existing & Proposed Buildings

A10. Total Area of Other Existing & Proposed Impervious Areas

A11. Subdivisions Total Number & Proposed Lots & Minimum Lot Sizes

A12. Construction Sequence & Schedule

A13. Existing & Proposed Land Elevations & Contours

A14. First Floor Elevations Existing & Proposed Buildings

A15. Surface Water Bodies, Wetlands, Water Supply Wells on or Within 500 Feet

A16. U.S.G.S. Quadrangle Map

A17. Location Plan Showing the Project Site & All Properties Within 200 Feet of the Project Drawn to a Scale of not less than 1 Inch = 50 Feet

A18. Proposed Erosion Control Methods During Construction

A19. Proposed Storm Water Runoff Control System

A20. Proposed Landscape Plan

B. Environmental Inventory

B1. Groundwater & Surface Water Hydrology & Wetlands (see Map)

B2. Air Quality

B3. Noise Level

B4. Topography

B5. Soils

B6. Potable Water Supply

B7. Sanitary Sewage Disposal

B8. Storm Water

B9. Solid Waste Disposal

B10. Hazardous Waste Disposal

B11. Hazardous Materials

B12. Vegetation

B13. Wildlife

B.14 Cultural or Historical Features

C. Environmental Impact Assessment

D. Mitigation & Remedial Measures

E. Alternatives

F. Drawings & Maps

A. Project Identification & Description

The project is identified as 32 & 14 North Peak Street, which proposes two residential homes. One of the residential homes will be located on Block: 35 Lot: 9 and will be 5,658.99 square feet (32 North Peak Street). The Second residential home will be located on Block: 35 Lot: 8 and will be 7,775.37 square feet (14 North Peak Street).

A1. Project Name

32 & 14 North Peak Street

A2. Tax Map Identification

Tax map identification of all real estate parcels included in the project are:
Drawing: HL254
Sheet 1 of 3
Minor Subdivision of Lots 8 & 9, Block 35
Borough of Highlands
Monmouth County
New Jersey
(See Attached Drawing)

A3. Streets Abutting the Project Site

The street abutting North Peak Street is Valley Avenue.

Drawing: HL254
Sheet 1 of 3
Minor Subdivision of Lots 8 & 9, Block 35
Borough of Highlands
Monmouth County
New Jersey
(See Attached Drawing)

A4. Current & Proposed Zoning Classification

Current and proposed zoning is (R-1.01) Residential
Drawing: HL254
Sheet 3 of 3
Minor Subdivision of Lots 8 & 9, Block 35
Borough of Highlands
Monmouth County
New Jersey
(See Attached Drawing)

A5. Present & Proposed Land Use & Current Use of Adjacent Properties

The present land use will be for two single family homes. The current land use is also single-family homes. The adjacent properties are all single-family homes.
(See Attached Drawing A5)

A6. Project Contact information

Name of Applicant: 32 & 14 North Peak Street
Name of Owner: Home & Land Development
Address of Owner: 88-1 Portland Road
Phone Number of Owner: (917) 686-4111
Email: GNF718@aol.com

Legal Counsel Name: Evan P. Zimmerman
Phone Number: (732) 741-3900
Address: 125 Half Mile Rd., Red Bank, N.J., 07701
Email: EZimmerman@GHCLAW.com

Engineer: Grotto Engineering Associates, LLC.
Address: 77 Brant Ave., Suite 105, Clark, N.J., 07066
Phone: (908) 272-8901
Email: FFarrell@GrottoEngineering.com

Preparation of Environmental Impact Statement:
Name: Tulmark, LLC.
Address: P.O. Box 12, Leonardo, N.J., 07737
Phone: (732) 291-5030
Email: JCTully@Tulmark.com

A7. Area of Project Site & Area to be Disturbed by the Project.

Drawing: HL254
Sheet 2 of 3
Minor Subdivision of Lots 8 & 9, Block 35
Borough of Highlands
Monmouth County
New Jersey
(See Attached Drawing)

A8. Area of Existing & Proposed Roadways

There are no proposed roadways for the project (See Drawing HL254).

A9. Number, Squair Footage & Function of Existing & Proposed Buildings

There are two proposed single family residential homes.

One of the single-family homes will be located on Block: 35 Lot: 9 and have an address of 14 North Peak Street. This home will be 5,658.99 square feet.

The second single-family residential home will be located on Block: 35 Lot: 8 and have an address of 32 North Peak Street, Highlands, New Jersey. This home will be 7,775.37 square feet.

A10. Total Area of Other Existing & Proposed Impervious Areas.

For Lot 8 the total impervious area is 39%. (See Plot Plan, Job: PR-0290, Seet 1 of 5.)

For Lot 9 the total impervious area is 34%. (See Plot Plan, Job:PR-290, Sheet 1 of 5.)

A11. Subdivisions, Total Number of Proposed Lots & The Minimum Lot Size.

There are a total of two proposed Lots which are Lot 8, and Lot 9.

	Minimum Lot Size	Proposed Lot Size
Lot 8	7,775.35 sq.ft.	7,775.35 sq.ft.
Lot 9	5,658.99 sq.ft.	5,658.99 sq.ft.

sq.ft. = Square Feet

A12. Construction Sequence & Schedule

The construction sequence and schedule is as follows:

1. Clear proposed entrance and place stabilized construction entrance pad as noted.	3 Days
2. Install sediment control structures.	2 Days
3. Demolish existing structures.	1 Week
4. Clear land areas to be developed. Trees shall remain wherever possible.	1 Week
5. Rough grade the site.	2 Weeks
6. Construct storm sewers and detention system.	1 Week
7. Install sediment control measures around inlets.	1 Day
8. Begin building construction curbing	4 Days
9. Begin fine grading.	3 Days
10. Stabilize all areas not subject to construction traffic that will remain exposed for more than 30 days.	1 Day
11. Construct lighting and remaining underground utilities.	1 Week
12. Construct driveway and pavement.	1 Week
13. Finish building construction.	6 Months
14. Install landscaping.	1 Week
15. Stabilize all disturbed areas in accordance with applicable temporary or permanent seeding specifications.	1 Week
16. Remove sediment around silt fences and/or hay bales.	1 Week
17. When area is stabilized, sediment control structures can be removed.	2 Days

A13. Existing & Proposed Land Elevations & Contours.

See Drawing: HL254
Sheet 3 of 3
Minor Subdivision of Lots 8 & 9, Block 35
Borough of Highlands
Monmouth County
New Jersey
(See Attached Drawing)

A14. Floor Elevations for All Existing & Proposed Buildings.

	Lot 8	Lot 9
Finished Floor Elevation	143.0'	145.2'
Grade Floor Elevation	142.0'	144.2'

A15. All Surface Water Bodies, Wetlands, Water Supply Wells on or Within 500 Feet of the Project.

There are no water bodies, wetlands, or water supply wells within 500 feet of the Project. The project site is in a suburban environment. Based on available New Jersey Department of Environmental Protection (NJDEP) mapping, there are no wetlands or associated wetland buffers located on the project site or surrounding area.

A16. U.S.G.S. Quadrangle Map

(See Attached Drawing A16.)

A17. Location Plan Showing the Project Site & all Properties Within 200 Feet of the Project Site Drawn to a Scale not Less Than 1 Inch = 50 Feet.

Drawing: HL254
Sheet 1 of 3
Minor Subdivision of Lots 8 & 9, Block 35
Borough of Highlands
Monmouth County
New Jersey
(See Attached Drawing)

A18. Proposed Erosion Control Methods During Construction

Soils on the project site will be graded to provide a level area to construct the proposed development. Soil erosion and sediment control measures will be employed to control erosion and minimize sedimentation of nearby storm drains. Nearby storm drain inlet protection and silt fence will be in place prior to any site disturbance activities and will be maintained throughout the construction process.

Soil stockpiles are not to be located within 50 feet of a flood plain, slope, roadway, or drainage facility. The base of all stockpiles shall be protected by a hay bale barrier or sediment control fence.

The site shall at all times be graded and maintained such that all stormwater runoff is diverted to soil erosion and sediment control components.

All sedimentation components shall be inspected and maintained on a regular basis.

The soil conservation district may request additional measures to minimize on-site or off-site soil erosion problems during construction.

The contractor shall maintain soil erosion and sediment control measures during construction. The owner shall maintain soil erosion and sediment control measures after construction is completed.

A19. Proposed Storm Water Runoff Control System.

The proposed project incorporates the implementation of best management practices in accordance with the "Plot Plan for 32 North Peak Street Block 35, Lot 8 & 9. Situated in the Borough of Highlands, New Jersey", Borough of Highlands, and the State of New Jersey Stormwater Regulations outlined in NJAC 7:8. In general the stormwater management design will serve to maintain the existing drainage patterns while reducing post-development site runoff rates when compared to predevelopment runoff conditions. The project does not meet the definition of a "major development" under NJAC 7:8. The proposed project has been designed in a manner so that it will not adversely impact the existing drainage patterns, adjacent roadways or adjacent parcels. Further, stormwater runoff rates for the 2-, 10- and 100-year design storms will comply with the runoff rate reduction requirements set forth in NJAC 7:8 and Borough of Highlands requirements. There are no anticipated adverse impacts to the existing stormwater management system, surface water or groundwater due to stormwater runoff.

A20. Proposed Landscaping Plan

The area around the homes will be attractively and functionally landscaped. It will be designed to fit in with neighboring properties with conventional landscape design features which include flowers, shrubs, trees and structures arranged in various patterns. A professional landscape architect, landscape designer, or the builder will develop a landscape design.

B. Environmental Inventory

B1. Groundwater & Surface Water Hydrology & Wetlands

The watershed in which the site is located is the Monmouth (Watershed #12). There are no wetlands, streams, or waterbodies on or near the site. There are no potable wells located on or near the site.

Ground Water Recharge Areas: Monmouth

POLYID	81,877
Watershed Management Area	12
Watershed Management Name	Monmouth
Watershed Region	3
Watershed Region Name	Atlantic Coast
Municipality	HIGHLANDS BORO
County	MONMOUTH
Estimated Ground Water Recharge (1/100th in.)	11.10
Estimated Ground Water Recharge (1 in.)	11
Estimated Drought Ground-water Recharge (1/100th in.)	8.71
Estimated Drought Ground Water Recharge (1 in.)	9
Ground-water Recharge Rank	B
Values	11 to 15 in/yr

Watershed Area: Monmouth

Hydrologic Unit Code (11 Digit):	02030104070
Watershed ID:	12BA
Watershed Name:	Navesink River / Lower Shrewsbury River
Watershed Management Area No.:	12
Watershed Management Area Name:	Monmouth
Water Region No.:	3
Water Region Name:	Atlantic Coast

B2. Air Quality

The proposed project does not involve incinerating devices, or any processing of materials that would produce visible smoke, or chemical odors. Typical heating, ventilation and air conditioning (HVAC) devices will be installed to provide adequate indoor climate control, which are typical of residential uses. In terms of odor, refuse dumpsters containing odoriferous materials will be covered to ensure that odors are contained. It is anticipated that there will be no potential impact related to air quality from devices installed at the project site or processes associated with the construction or disposal of waste materials.

B3. Noise Level

No long-term noise impacts on the project site or the surrounding community are expected from the proposed project. Potential impacts to existing noise levels may occur during the construction of the proposed project. During construction, noise impacts will be mitigated through best management practices, however any noise during construction will be short term and will cease during the evening and once construction is complete. It is anticipated that the noise produced from the construction will conform to the thresholds established by the New Jersey Sound Code (N.J.A.C. 7:29) and the Borough of Highlands Noise Ordinance. Workers will work on the site during normal working hours.

B4. Topography

Topographic survey information is shown based on field survey made on the property by Eastern Civil Engineers, LLC. Elevations shown refer to North American Vertical Datum of 1988 provided below.

Grading Plan For,
Home & Land Development Corp.,
Block 35 Lots 8 and 9,
Tax Map Sheet # 10,
Highlands Borough,
Monmouth County,
New Jersey,
Sheet 1 of 1
(See Attached Drawing)

The topography slope analysis of the site is described in the attached plan drawing provided below.

Slope Analysis Plan,
32 North Peak Street,
Block 35, Lots 8 and 9,
Situated in the Borough of Highlands,
Monmouth County,
New Jersey
(See Attached Drawing)

B5. Soils

The soil on the site consists of the following according to the USDA Soil Survey:

Typical profile of the site:
A - 0 to 2 inches: loamy sand
E - 2 to 7 inches: loamy sand
BA - 7 to 17 inches: loamy sand
Bt - 17 to 21 inches: sandy loam
Bm - 21 to 29 inches: sandy loam
BC - 29 to 38 inches: sandy loam
C - 38 to 60 inches: very flaggy loamy sand

B6. Potable Water Supply

Current water supply source for the site is New Jersey American Water Company, 661 Shrewsbury Ave., Shrewsbury, New Jersey 07702.

B7. Sanitary Sewage Disposal

Township of Middletown Sewerage Authority, P.O. Box 205, 100 Beverly Way, Belford, New Jersey, 07718.

B8. Storm Water

The proposed project incorporates the implementation of best management practices in accordance with the "Plot Plan for 32 North Peak Street Block 35, Lots 8 and 9. Situated in the Borough of Highlands, Monmouth County, New Jersey", and the State of New Jersey Stormwater Regulations outlined in NJAC 7:8. In general the stormwater management design will serve to maintain the existing drainage patterns while reducing post-development site runoff rates when compared to predevelopment runoff conditions. The project does not meet the definition of a "major development" under NJAC 7:8. The proposed project has been designed in a manner so that it will not adversely impact the existing drainage patterns, adjacent roadways or adjacent parcels. Further, stormwater runoff rates for the 2, 10, and 100-year design storms will comply with the runoff rate reduction requirements set forth in NJAC 7:8 and Borough of Highlands requirements. There are no anticipated adverse impacts to the existing stormwater management system, surface water or groundwater due to stormwater runoff.

B9. Solid Waste Disposal

During construction solid waste will be placed in dumpsters provided by a private hauler and covered during pickup and transportation to a licensed disposal facility. Dumpsters will be utilized during the construction process and construction final cleanup on an as needed basis. After construction is completed and the new home is occupied residential refuse will be collected and disposed of by a The Borough of Highlands, Monmouth County, New Jersey.

B10. Hazardous Waste Disposal

Any hazardous materials (defined as hazardous substances as per CERCLA) such as mastics, gases, liquids, gels, or powers utilized on the site during construction will be properly disposed of at a licensed disposal facility by the contractor using the material. This project is for the construction of residential homes and no hazardous materials will be left on the site or be produced on site after construction is completed.

B11. Hazardous Materials

All hazardous materials defined as hazardous substances as per CERCLA (Comprehensive Environmental Response Compensation & Control Act) will be entirely the responsibility of the contractor utilizing the hazardous substance. Normally these are substances commonly utilized in construction of residential homes such as gases, liquids, gels, mastic, or powers. No hazardous substance will be allowed to be stored on site during construction for more than an 8-hour workday. After construction is completed, all left over hazardous substance will be removed by the contractor utilizing the hazardous substance and property disposed of at a licensed disposal facility.

B12. Vegetation

Current existing vegetation on the site prior to construction consists of weeds, and common trees.

Maintenance should occur on a regular basis during and after construction, consistent with plant growth, soil and climatic conditions. This involves regular mowing in the summer, fire control, tall weed, and pest control. Mowing on improved areas, such as lawns shall be frequent enough to maintain an acceptable appearance. On semi-improved areas, mowing will be infrequent. Unimproved areas may be left un-mowed to permit natural growth. The property owner shall be responsible for maintenance during and after construction.

B13. Wildlife

There is no wildlife on the site that would be impacted by the development of the site as per data for the Atlantic Costal Region of New Jersey.
(See Attached Drawing B13.)

B14. Cultural or Historic Features

There are no historic archaeological sites, historic districts, or historic properties on the site or near the site.

C. Environmental Impact Assessment

Description of Impact on Each Condition Above

Air Quality	The proposed project does not involve incinerating devices, or any processing of materials that would produce visible smoke, or chemical odors. In terms of odor, refuse dumpsters containing odoriferous materials will be covered to ensure that odors are contained. It is anticipated that there will be no potential impact related to air quality from devices installed at the project site or processes associated with the construction or disposal of waste materials.
Noise	During construction, noise impacts will be mitigated through best management practices, however any noise during construction will be short term and will cease during the evening and once construction is complete. It is anticipated that the noise produced from the construction will conform to the thresholds established by the New Jersey Sound Code (N.J.A.C. 7:29) and the Borough of Highlands Noise Ordinance.
Topography	Topographic survey information is shown based on field survey made on the property by Eastern Civil Engineers, LLC. Elevations shown refer to North American Vertical Datum of 1988 provided below (See Attached Drawing).
Soils	Soils on the project site will be graded to provide a level area to construct the proposed development. Soil erosion and sediment control measures will be employed to control erosion and minimize sedimentation of nearby storm drains. A site-specific soil erosion and sediment control plan in accordance with the Standards for Soil Erosion and Sediment Control in New Jersey will be provided.
Potable Water Supply	Current water supply source for the site is New Jersey American Water Company, Shrewsbury, New Jersey. Additional demand for residential use water supply will be requested after construction is completed.
Sanitary Sewage Disposal	The sanitary sewer disposal for the site is the Township of Middletown Sewerage Authority. There will be additional demand for disposal of residential sanitary sewerage after construction is completed.
Storm Water	In general, the stormwater management design will serve to maintain the existing drainage patterns while reducing post-development site runoff rates when compared to predevelopment runoff conditions. The proposed project has been designed in a manner so that it will not adversely impact the existing drainage patterns, adjacent roadways or adjacent parcels.

Solid Waste Disposal	Refuse and solid waste materials are collected and disposed of by the Borough of Highlands. There will be additional request for residential solid waste disposal after construction is completed. During construction a private hauler will provide dumpsters on an as needed basis.
Hazardous Materials	No hazardous substance will be allowed to be stored on site during construction for more than an 8-hour workday. After construction is completed, all left over hazardous substance will be removed by the contractor utilizing the hazardous substance and property disposed of at a licensed disposal facility.
Vegetation	Maintenance should occur on a regular basis during and after construction, consistent with plant growth, soil and climatic conditions. This involves regular mowing in the summer, fire control, tall weed, and pest control. Mowing on improved areas, such as lawns shall be frequent enough to maintain an acceptable appearance. On semi-improved areas, mowing will be infrequent. Unimproved areas may be left un-mowed to permit natural growth.
Wildlife	There is no wildlife on the site that would be impacted by the development of the site as per data for the Atlantic Costal Region of New Jersey. There will be no impact to wildlife areas during or after construction is completed.
Cultural or Historic Features	There are no historic archaeological sites, historic districts, or historic properties on the site or near the site. There will be no cultural or historical features impacted during or after construction is completed.

D. Mitigation and Remedial Measures

Based on the review of the potential impacts discussed in Sections above, the critical impacts associated with the project may include impacts to stormwater, utilities, and general construction impacts. Measures to mitigate the potential impacts of the proposed project during the construction and operation phases have been addressed through appropriate performance controls as discussed in Sections above. These measures will minimize or eliminate negative impacts onsite and off-site.

E. Alternatives

The following alternatives analysis considered the no-build alternative. Under the no-build alternative, the project would not be constructed. The project site would remain an unoccupied lot undeveloped, and underutilized. The lot would be overgrown vegetation covered eyesore.

The build alternative for the property would consist of two new single family residential homes that fit with the surrounding homes and neighborhood. They would maintain an architectural design that blends in with the surrounding neighborhood and conforms to all density residential zoning requirements.

F. Drawings & Maps

A5. Present & Proposed Land Use & Current use of Adjacent Properties

FOREST

URBAN Residential

Site Location: 32 & 14 North Peak St., Highlands, N.J.
Block: 35 Lots: 8 & 9

North

1:1,128

0 0.01 0.01 0.02 mi

0 0.01 0.02 0.04 km

A10. Total Areas Other Existing Impervious Areas

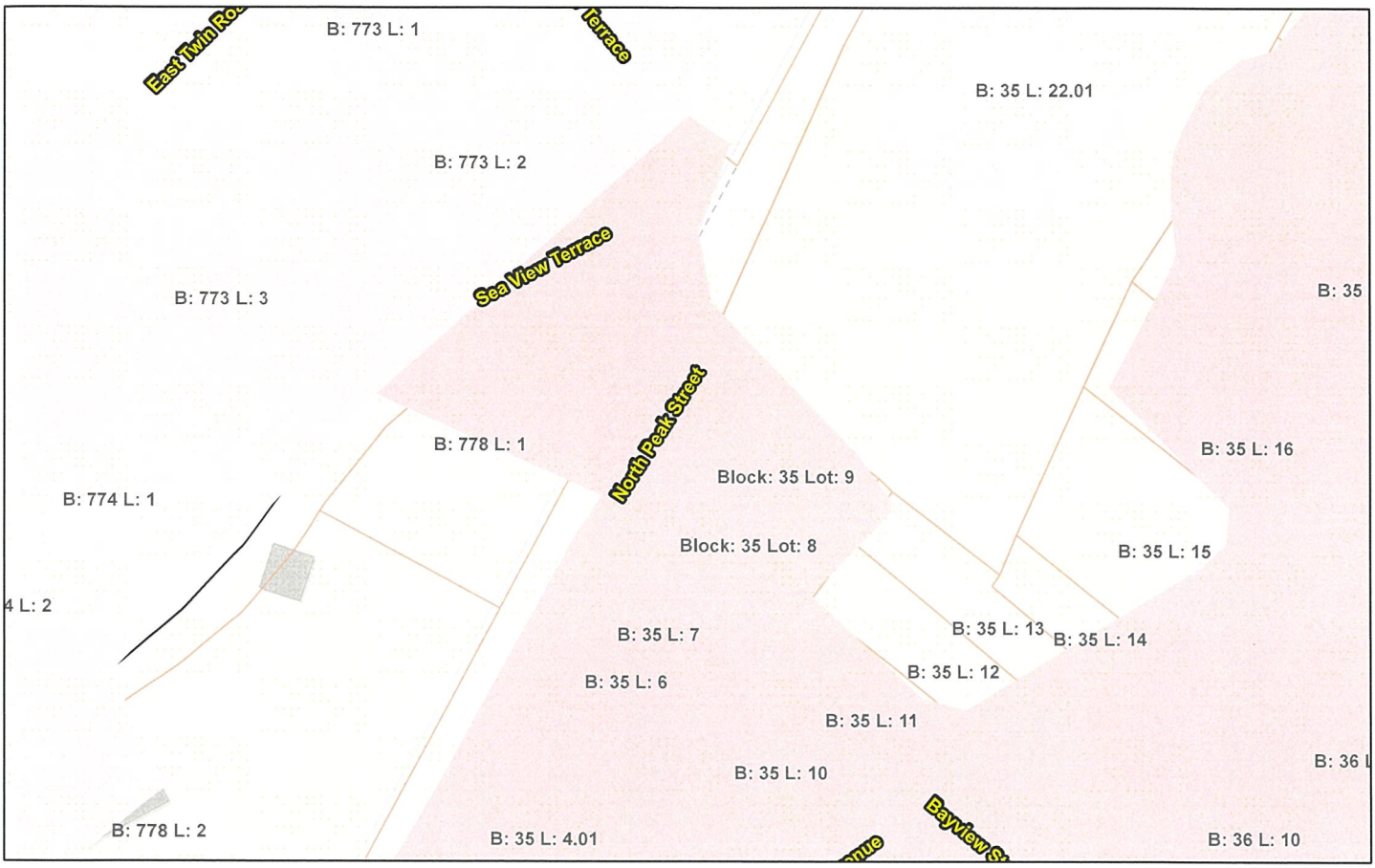

Impervious Surface % (2012)

21 - 40 %

Less than 20%

Less than 20%

Site Location: 32 & 14 North Peak St.
Block: 35 Lots: 8 & 9

Date 7/26/2024

Drawing: A10

Scale: 1" = 60'

North

A15. Surface Water Bodies, Wetlands, Water Supply Wells on or Within 500 Feet of the Project.

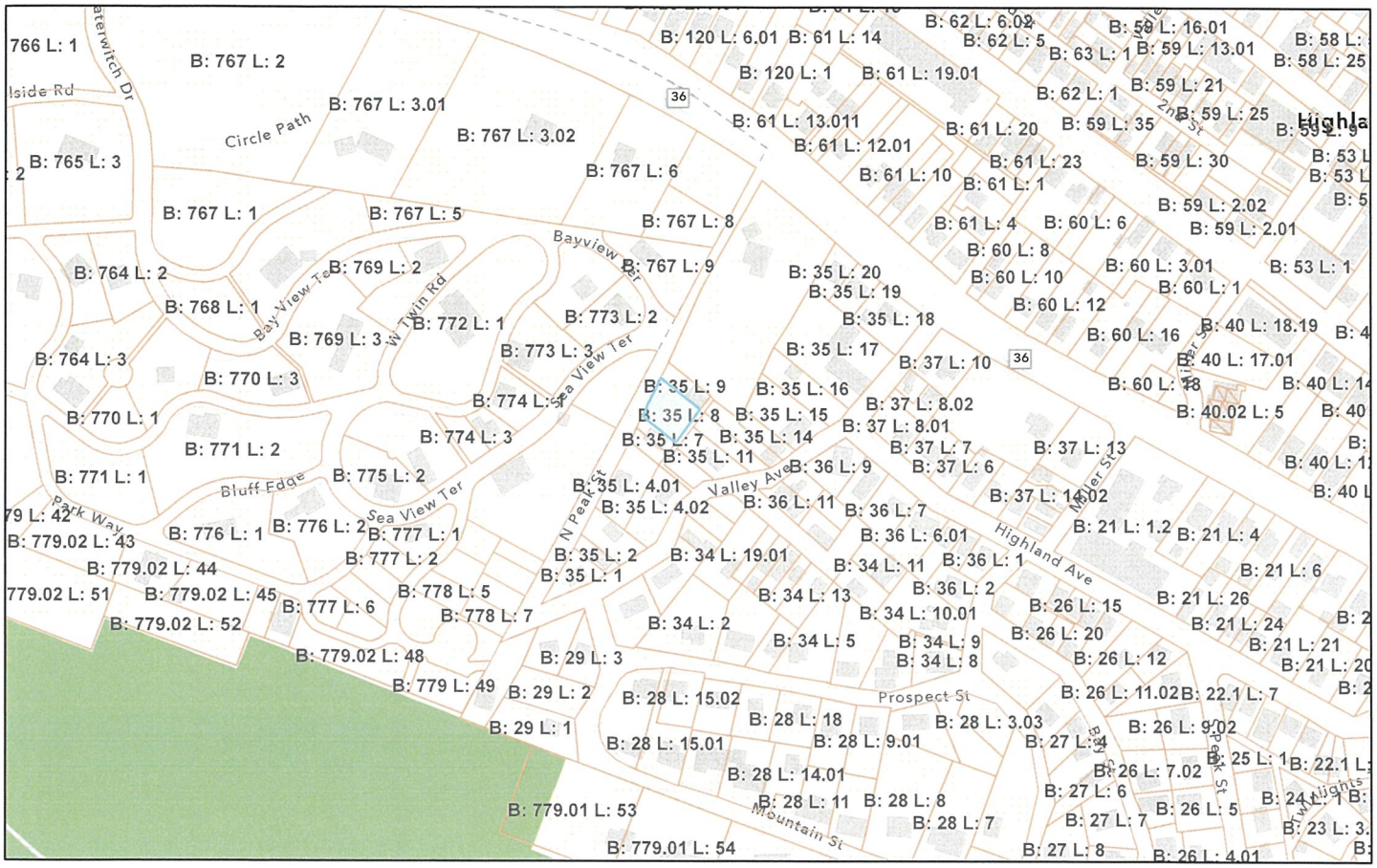

Site Location 32 & 14 North Peak St., Highlands, N.J.

Block: 35 Lots: 8 & 9.

Date: 7/26/2024

Drawing A15.

A16. U.S.G.S. Quadrangle Map

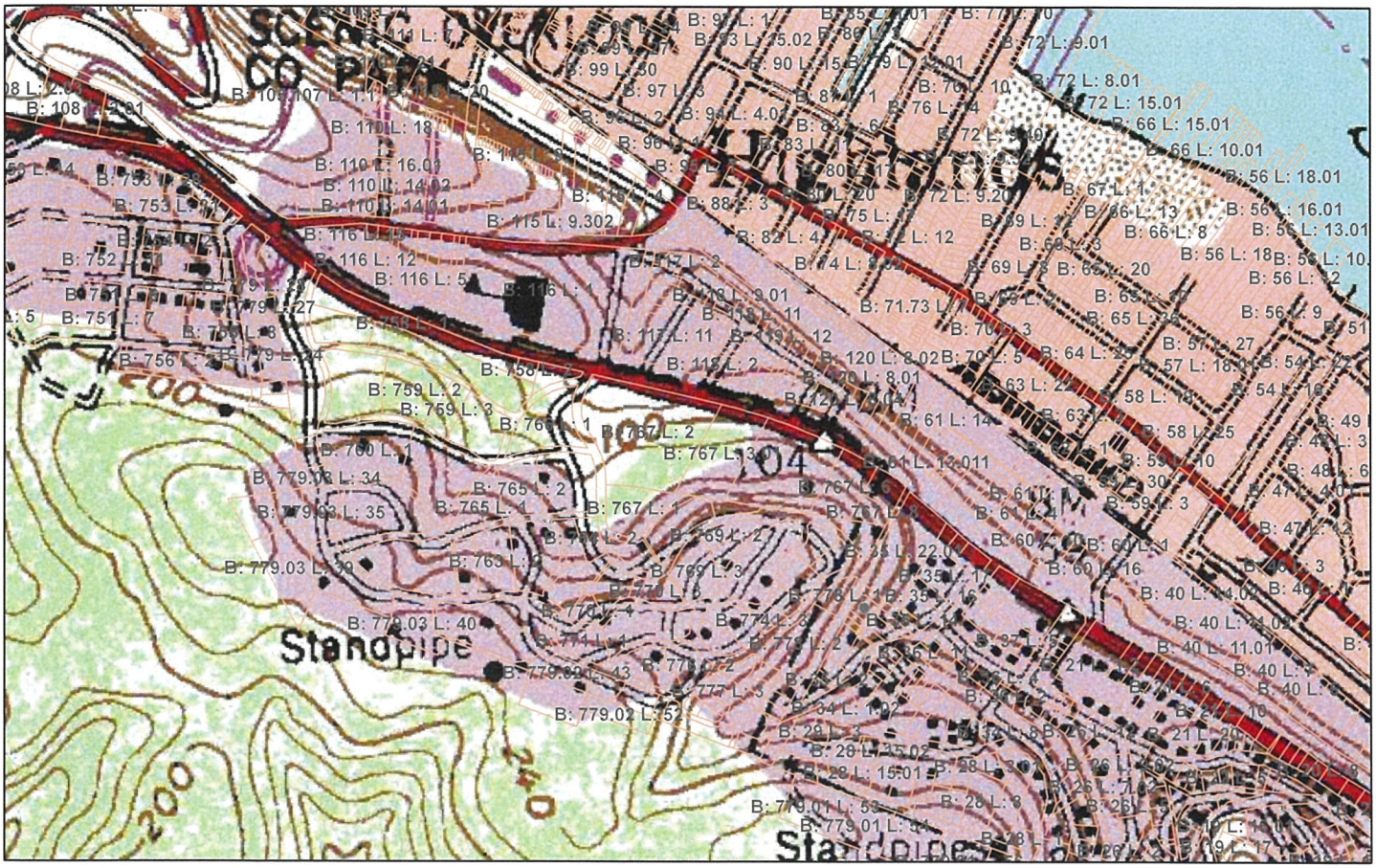

U.S.G.S. Quadrangle Map
Site Location: 32 & 14 North Peak St.
Highlands, N.J., Block: 35 Lots: 8 & 9

Date: 7/26/2024

Drawing A16.

North

1:9,028
0 0.05 0.1 0.2 mi
0 0.07 0.15 0.3 km

B13. Wildlife

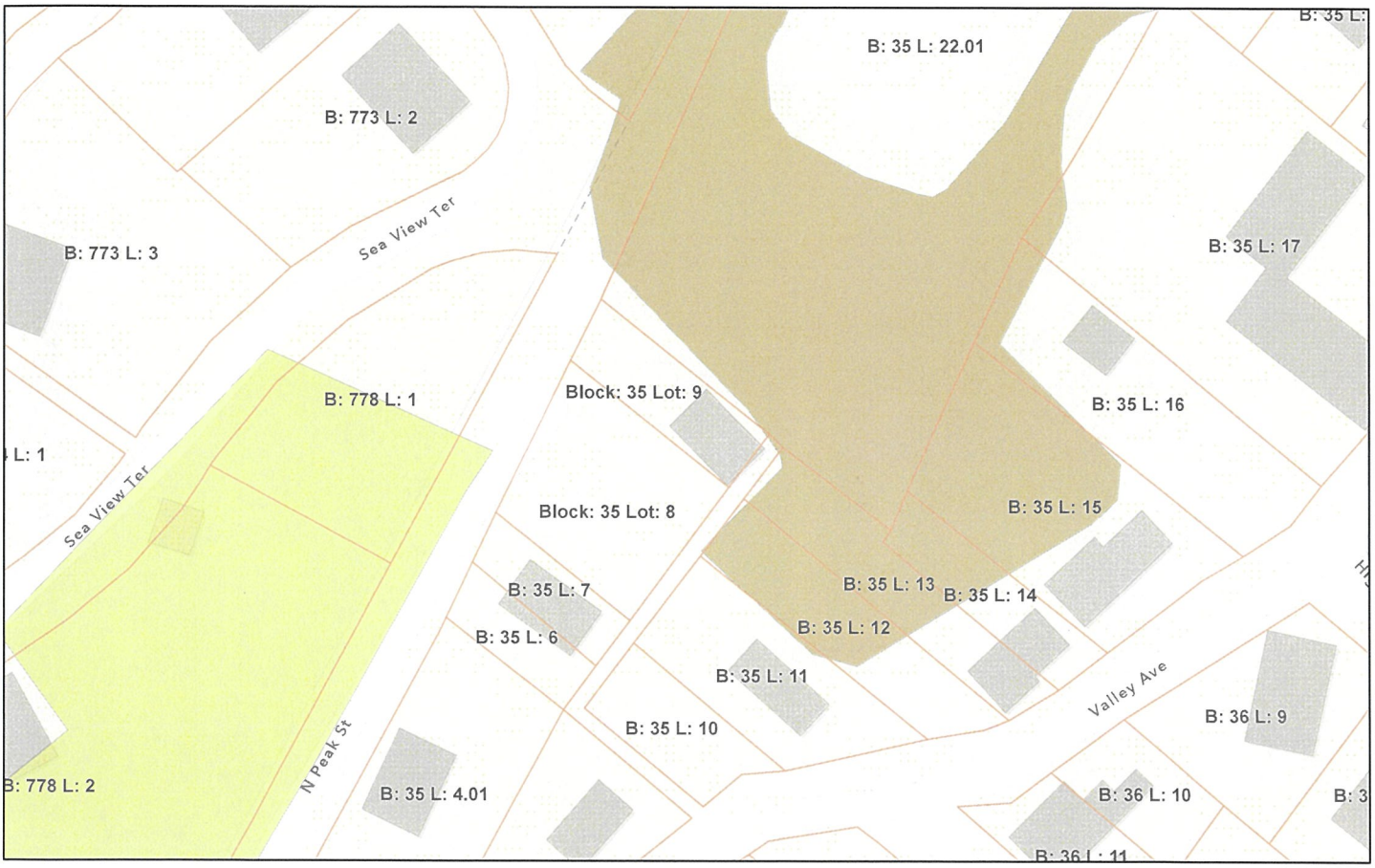

Rank 1 - Habitat specific requirements

Rank 2 - Special Concern

Site Location: 32 & 14 North Peak St.
Highlands, N.J., Block: 35 Lots: 8 & 9

Drawing B13. **Date: 7/26/2024**

1:1,128

0 0.01 0.01 0.02 mi

0 0.01 0.02 0.04 km

NOTE: A WATER TAKEN AND DIRECTION NOT TO SET CORNER MARKERS" HAS BEEN OBTAINED FROM THE ULTIMATE USER PURSUANT TO N.J.A.C. 13:40-5.1(C)6.

THE MONUMENTS SHOWN HEREON DIRECTLY DEPENDENT ON OBSERVING TRUE N.J. AND ALL OF THE DATA OF THE FIELD SURVEY, EXCEPT ANY APPARENTLY OF EASEMENTS, IF ANY, BELOW THE SURFACE ARE NOT SHOWN.

THIS SURVEY IS SUBJECT TO CHANGE ACCORDING TO THE FACTS THAT A CURRENT TITLE REPORT MAY DISCLOSE

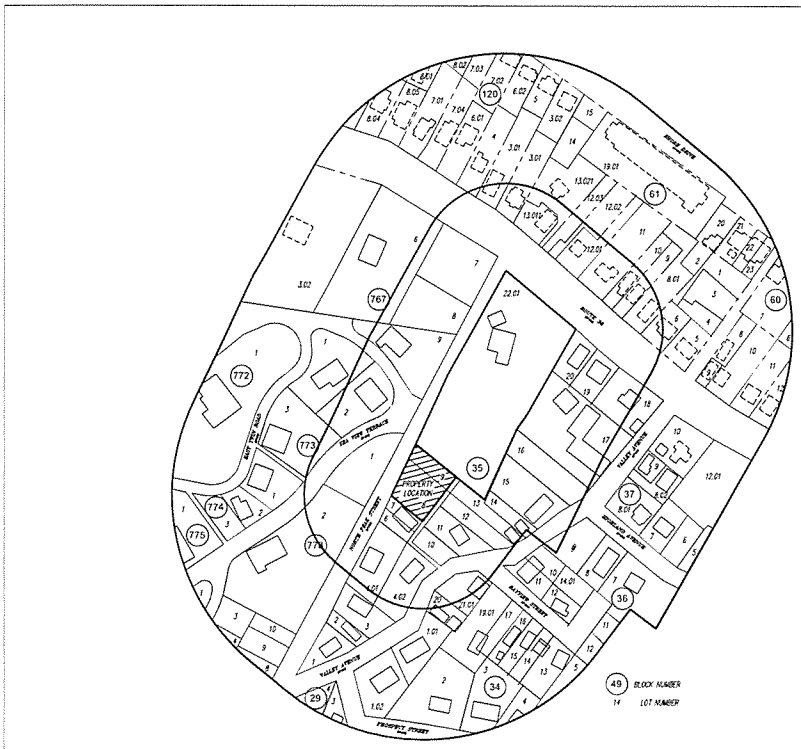

LIST OF OWNERS WITHIN 200 FEET			
BLOCK	LOT	PROPERTY OWNER	
758	1.01	MONMOUTH HILLS INC ACCESS PROP MONT 1080 WAC SERVICES POST RD EATON, NJ 08807	
778	1	MONMOUTH HILLS INC ACCESS PROP MONT 1080 WAC SERVICES POST RD EATON, NJ 08807	
35	6	ALWATER DONNA 11 NORTH PEAK STREET HIGHLANDS, NJ 07732	
35	10	DUNN JOSEPH & JOSEPH DUNN LE 102 VALLEY AVENUE HIGHLANDS, NJ 07732	
35	9	DUNN JOSEPH & JOSEPH DUNN LE 102 VALLEY AVENUE HIGHLANDS, NJ 07732	
35	8	FELICIANO JERRY 310 A BOARDWALK SQUARE BERWYN BEACH, FL 33408	
35	14	NEWMAN DR RONALD & NANCY 94 VALLEY AVENUE HIGHLANDS, NJ 07732	
34	11	108 VALLEY AVE LLC 13 JAZZ LANE LITTLE EGG HARBOR, NJ 08087	
35	7	ALWATER DONNA 11 NORTH PEAK STREET HIGHLANDS, NJ 07732	
34	1.01	LOWES JERRY & MARYA 99 VALLEY AVE HIGHLANDS, NJ 07732	
34	7.01	WAGNER PETER 87 VALLEY AVENUE HIGHLANDS, NJ 07732	
35	11	DUNN JOSEPH & JOSEPH DUNN 102 VALLEY AVENUE HIGHLANDS, NJ 07732	
35	8	HOME & LAND DEVELOPMENT CORP 884-1 PORTLAND ROAD HIGHLANDS, NJ 07732	
36	11	BRUNO GARY & PAMELA 87 VALLEY AVE HIGHLANDS, NJ 07732	
35	13	SEMPKE DEMETRIOS 90 VALLEY AVENUE HIGHLANDS, NJ 07732	

LIST OF OWNERS WITHIN 200 FEET (CONTINUED)			
BLOCK	LOT	PROPERTY OWNER	
35	12.01	BOSCO RICHARD & MICHELE 120 WHEDON AVENUE HIGHLANDS, NJ 07732	
35	4.02	WILKINS PETRES FRANCIS & PAULA ANN 110 VALLEY AVENUE HIGHLANDS, NJ 07732	
35	15	MOTA EDWARD W & THERESA 92 VALLEY AVENUE HIGHLANDS, NJ 07732	
767	1	FARROW LORRAINE A & ESTE W PO BOX 646 NAVESINK, NJ 07752	
778	2	ONES MICHAEL & SUSY 34 SEAVIEW TERR HIGHLANDS, NJ 07732	
774	1	MCALEER COLLEEN FUNK 31 E 78th St HIGHLANDS, NJ 07732	
773	2	MCNULTY DAVID 32 SEAVIEW TERR HIGHLANDS, NJ 07732	
772	2	BLAZO EDITH 37 E 78th St HIGHLANDS, NJ 07732	
35	16	FONDOS JEFFY & VALENCIA ENRIQUE 79 VALLEY AVE HIGHLANDS, NJ 07732	
35	17	VALLEY HOMES INVESTMENT LLC 32 VALLEY AVENUE HIGHLANDS, NJ 07732	
35	4.01	JOHNSON EDWARD W 2 NORTH PEAK STREET HIGHLANDS, NJ	
772	1	PRIOR ARTHUR R & ROSEANNA 30 E 78th ROAD HIGHLANDS, NJ 07732	
767	2		
91	10		
91	12.01		

UTILITY AND GOVERNMENTAL AGENCY TO BE NOTIFIED

JCP&L
300 MADISON AVENUE
PO BOX 1911
MORRISTOWN, NJ 07960

NEW JERSEY AMERICAN WATER COMPANY
ATTN: CONSTRUCTION DEPARTMENT
661 SHREWSBURY AVE
SHREWSBURY, NJ 07702

COMCAST COMMUNICATIONS OF MONMOUTH COUNTY
RON STEINRAND, CONSTRUCTION FOREMAN
403 SOUTH ST
EATONTOWN, NJ 07724

VERIZON COMMUNICATIONS
ONE VERIZON WAY
BASKING RIDGE, NJ 07920

TOWNSHIP OF MIDDLETOWN SEWERAGE AUTHORITY
RAYMOND J. MERRITT, P.E., EXECUTIVE DIRECTOR
PO BOX 205, 100 BEASLEY WAY
BELFORD, NJ 07718

NJ NATURAL GAS COMPANY
PO BOX 1464, 1415 WYCKOFF ROAD
WALL, NJ 07719

MONMOUTH COUNTY BAYSHORE OUTFALL AUTHORITY
ATTN: EXECUTIVE DIRECTOR
PO BOX 184, 200 HARBOR WAY
BELFORD, NJ 07718

Application No. _____ approved/disapproved by the Highlands Borough Planning Board/Board of Adjustment as a Minor Subdivision on _____ (date)

_____
Chairman

_____
Secretary

NO WETLANDS EXIST ON THIS PROPERTY

I HEREBY CERTIFY THAT THIS IS A TRUE AND ACCURATE SURVEY MADE ON THE GROUND. THERE ARE NO ENCROACHMENTS EITHER WAY ACROSS PROPERTY LINES EXCEPT AS SHOWN

IF THIS DOCUMENT DOES NOT CONTAIN A RAISED IMPRESSION SEAL OF THE PROFESSIONAL IT IS NOT AN ORIGINAL

SIGNATURE	DATE
THOMAS P. SANTRY, JR., P.L.S.	
PROFESSIONAL LAND SURVEYOR	
P.L.S. LIC. No. 24GS03543000	

Rev 11/30/23 - MSR ENGINEERING REVIEW COMMENTS
Rev 5/1/23 Add Cert

MINOR SUBDIVISION OF LOTS 8 & 9 ~ BLOCK 35

32 & 14 North Peak Street
Borough of Highlands
Monmouth County, New Jersey

JOB No.	22-074
SCALE	1" = 100'
DATE	7/29/22
DRAWN BY	MSR
TAX MAP SHEET	10
SHEET	1 of 3
BLOCK 35 LOTS 8 & 9	16,754

THOMAS P. SANTRY, P.A.
LAND SURVEYORS
ONE HUNDRED TWENTY EIGHT EAST RIVER ROAD
RUMSON, NEW JERSEY 07760
PHONE (732) 741-4900 FAX (732) 741-0084

COPYRIGHT - ALL RIGHTS RESERVED THE DRAWING OR MEANS OF SUCH INSTRUMENT OR PORTIONS THEREOF FOR OTHER THAN THE ORIGINAL PROJECT OR PUBLISHING PERSONALLY RETAINED, WITHOUT THE WRITTEN PERMISSION OF THOMAS P. SANTRY, SURVEYING IS PROHIBITED

NOTE: A WRITTEN TRAVER AND DIRECTION NOT TO SET CORNER MARKERS HAS BEEN OBTAINED FROM THE ULTIMATE USER PURSUANT TO N.J.A.C. 13:40-5.1(d)

THE INFORMATION SHOWN HEREON CORRECTLY REPRESENTS THE SIGNIFICANT FEAT(S) AND AS OF THE DATE OF THE FIELD SURVEY, EXCEPT SUCH APPROACHES OR EXCEPTIONS, IF ANY, BELOW THE SURFACE AND NOT VISIBLE

THIS SURVEY IS SUBJECT TO CHANGE ACCORDING TO THE FACTS THAT A CURRENT TITLE REPORT MAY DISCLOSE

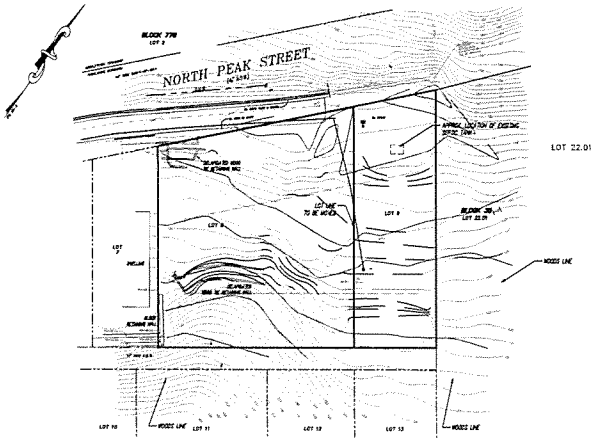

NO DETERMINATION HAS BEEN MADE AS TO THE PRESENCE OR ABSENCE OF WETLANDS ON THIS PROPERTY. NO STATEMENT IS BEING MADE OR IMPLIED HEREIN, NOR SHOULD IT BE CONSTRUED THAT ANY STATEMENT IS BEING MADE BY THE FACT THAT NO EVIDENCE OF THE SAME IS PORTRAYED HEREIN

I HEREBY CERTIFY THAT THIS IS A TRUE AND ACCURATE SURVEY MADE ON THE GROUND. THERE ARE NO ENCROACHMENTS EITHER WAY ACROSS PROPERTY LINES EXCEPT AS SHOWN

IF THIS DOCUMENT DOES NOT CONTAIN A RAISED IMPRESSION SEAL OF THE PROFESSIONAL IT IS NOT AN ORIGINAL

Rev. 11/30/23 - PER ENGINEERING REVIEW COMMENTS
Rev. 5/1/23 ASB MGR

MINOR SUBDIVISION OF
LOTS 8 & 9 ~ BLOCK 35
32 & 14 North Peak Street
Borough of Highlands
Monmouth County, New Jersey

THOMAS P. SANTRY, P.A.
LAND SURVEYORS
ONE HUNDRED TWENTY EIGHT EAST RIVER ROAD
RUMSON, NEW JERSEY 07760
PHONE (732) 741-4800 FAX (732) 741-0084

22-074
1" = 20'
7/29/22
MGR
10
2/3
H254

RESPONSIBLE PROFESSIONAL'S SIGNATURE DATE
THOMAS P. SANTRY, JR., P.L.S.
PROFESSIONAL LAND SURVEYOR
P.L.S. LIC. No. 24223540000

COPYRIGHT - ALL RIGHTS RESERVED

NOTE: A WATER TRAVERSE AND DIRECTION NOT TO SET CORNER MARKERS HAS BEEN OBTAINED FROM THE ULTIMATE USER PURSUANT TO N.J.A.C. 13:40-5.1(14).

THE INFORMATION SHOWN HEREON DERIVES FROM FIELD SURVEYS PERFORMED BY THIS OFFICE ON 2/10/22 AND 2/16/22. THE BASIS OF BEARINGS FOR THIS SURVEY IS THE NORTH AMERICAN DATUM OF 1983 (NAD83).

THIS SURVEY IS SUBJECT TO ANY AND ALL STATEMENTS OF FACT THAT AN ACCURATE TITLE REPORT MAY DISCLOSE.

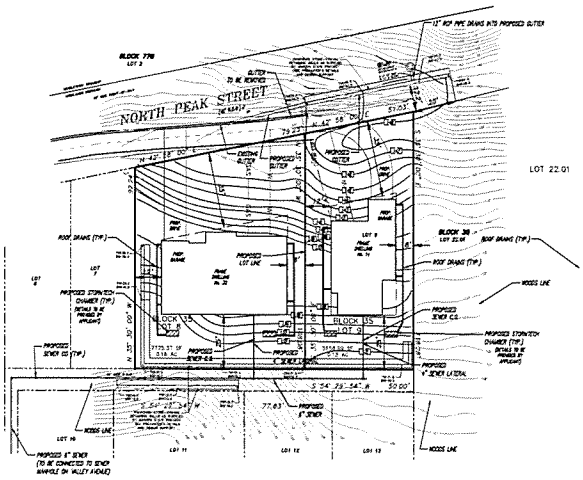

NOTES

1. TOPOGRAPHY AND GRADING OBTAINED FROM A CERTAIN MAP ENTITLED "GRADING PLAN FOR HOME & LAND DEVELOPMENT CORP. BLOCK 35, LOT 9" SAID MAP WAS DRAWN BY EASTERN CIVIL ENGINEERING, LLC ON 2/10/22. PROJECT NO. 210199B.
2. SILT FENCE SHALL BE PLACED AROUND THE PERIMETER OF THE LIMITS OF DISTURBANCE AND REMAIN UNTIL SOIL IS STABILIZED.
3. APPLICANT TO REPAIR ANY DAMAGED CURB OR PAVEMENT AS PART OF CONSTRUCTION.
4. ELEVATIONS SHOWN HEREON REFER TO NORTH AMERICAN VERTICAL DATUM OF 1988.
5. VARIANCE REQUESTED STEEP SLOPES ANALYSIS

BOROUGH OF HIGHLANDS
SCHEDULE OF LIMITATIONS
ZONE "R-1.01"

		PROPOSED	
PERMITTED USE		LOT 8	LOT 9
MINIMUM LOT AREA	5,000 SF	7,775.37 SF	5,658.99 SF
MINIMUM LOT DEPTH	100 FT	108.06'	116.28'
MINIMUM LOT FRONTAGE	50 FT	79.23'	51.63'
PRINCIPAL STRUCTURE			
MINIMUM FRONT SETBACK	35 FEET	35 FEET	35 FEET
MINIMUM REAR SETBACK	25 FEET	25 FEET	25 FEET
MINIMUM SIDE SETBACK	8/12 FEET	8/12 FEET	8/12 FEET
MAX LOT COVERAGE	30%	N/A	N/A
MAX BUILDING COVERAGE	30%	28.1%	22.6%
MAX BUILDING HEIGHT	30 FEET	N/A	N/A

SCALE 1"=20'
0 20 40 60 ft.

NO DETERMINATION HAS BEEN MADE AS TO THE PRESENCE OR ABSENCE OF WETLANDS ON THIS PROPERTY. NO STATEMENT IS BEING MADE OR IMPLIED HEREIN. NOR SHOULD IT BE CONSTRUED THAT ANY STATEMENT IS BEING MADE BY THE FACT THAT NO EVIDENCE OF THE SAME IS PORTRAYED HEREIN.

I HEREBY CERTIFY THAT THIS IS A TRUE AND ACCURATE SURVEY MADE ON THE GROUND. THERE ARE NO ENCROACHMENTS EITHER WAY ACROSS PROPERTY LINES EXCEPT AS SHOWN.

IF THIS DOCUMENT DOES NOT CONTAIN A RAISED IMPRESSION SEAL OF THE PROFESSIONAL IT IS NOT AN ORIGINAL.

Rev. 11/30/23 - PER ENGINEERING REVIEW COMMENTS
Rev. 5/1/23

THOMAS P. SANTRY, P.E., P.L.S.
PROFESSIONAL LAND SURVEYOR
P.L.S. LIC. NO. 24GS04432000
DATE

MINOR SUBDIVISION OF
LOTS 8 & 9 ~ BLOCK 35
32 & 14 North Peak Street
Borough of Highlands
Monmouth County, New Jersey

THOMAS P. SANTRY, P.A.
LAND SURVEYORS
ONE HUNDRED TWENTY EIGHT EAST RIVER ROAD
RUMSON, NEW JERSEY 07760
PHONE (732) 741-4800 FAX (732) 741-0084

JOB NO. 22-014
SCALE 1" = 20'
DATE 7/29/22
DRAWN MDR
CHECKED TS
SHEET 3 OF 3
DRAWING NO. 12254

COPYRIGHT - ALL RIGHTS RESERVED

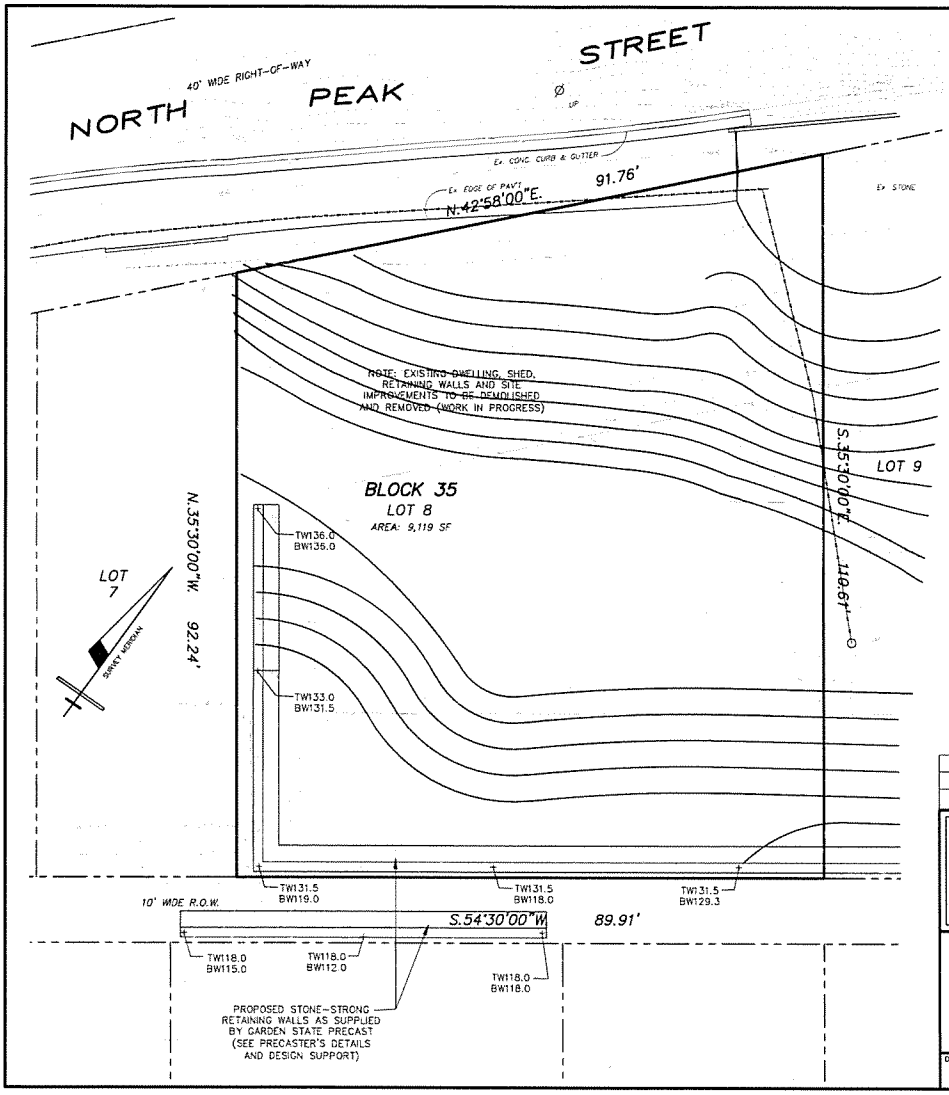

GENERAL NOTES

1. THE SUBJECT PROPERTY IS KNOWN AS LOT 8 IN BLOCK 35 AS SHOWN ON SHEET 10 OF THE CURRENT TAX MAP FOR HIGHLANDS BOROUGH, MONMOUTH COUNTY, NEW JERSEY.
2. TOPOGRAPHIC SURVEY INFORMATION SHOWN HEREON IS BASED ON FIELD SURVEY MADE ON THE GROUND BY EASTERN CIVIL ENGINEERING, LLC DATED 9-22-21. ELEVATIONS SHOWN HEREON REFER TO NORTH AMERICAN VERTICAL DATUM OF 1988.
3. THE SUBJECT PROPERTY IS SITUATED IN THE R-1.01 RESIDENTIAL ZONE DISTRICT. APPLICANT PROPOSES TO DEMOLISH AND REMOVE EXISTING DWELLING, EXISTING RETAINING WALLS, PARKING AREAS AND EXISTING SITE IMPROVEMENTS; THEN CONSTRUCT A NEW RETAINING WALL AND YARD GRADING IN PREPARATION FOR FUTURE DEVELOPMENT.
4. PROPERTY OWNER'S GENERAL CONTRACTOR IS RESPONSIBLE FOR SITE GRADING AND CONSTRUCTION ACTIVITY. CONTRACTOR SHALL CONTACT NJ ONE CALL SYSTEM AT (800)272-1000 FOR UTILITY MARK-OUT PRIOR TO EXCAVATION ON-SITE OR WITHIN MUNICIPAL RIGHT-OF-WAY.
5. ATTENTION OF THE CONTRACTOR IS DIRECTED TO THE FACT THAT APPROXIMATE LOCATIONS OF KNOWN UTILITY STRUCTURES AND FACILITIES THAT MAY BE ENCOUNTERED WITHIN OR ADJACENT TO THE SUBJECT PROPERTY OR LIMITS OF WORK ARE SHOWN ON THE PLANS. THE ACCURACY AND COMPLETENESS OF THIS INFORMATION IS NOT GUARANTEED BY THE ENGINEER. CONTRACTOR IS ADVISED TO VERIFY IN THE FIELD ALL THE FACTS CONCERNING THE LOCATION AND GRADE OF THESE UTILITIES OR OTHER CONSTRUCTION OBSTACLES PRIOR TO STARTING WORK. CONTRACTOR SHALL NOTIFY THE ENGINEER IN WRITING OF ANY DISCREPANCIES THAT MAY AFFECT THE PROJECT DESIGN.
6. CONTRACTOR IS RESPONSIBLE FOR SITE SAFETY, INCLUDING PROVISIONS FOR APPROPRIATE SAFETY DEVICES AND REQUIRED TRAINING.
7. SILT FENCE SHALL BE PLACED AROUND THE PERIMETER OF THE LIMITS OF WORK AS SHOWN ON THE PLAN AND SHALL REMAIN IN PLACE UNTIL THE LIMITS OF WORK ARE PERMANENTLY STABILIZED.
8. SOIL SHALL BE PERMANENTLY STABILIZED (SEEDED/SODDED) IN ACCORDANCE WITH CURRENT NJ SOIL EROSION AND SEDIMENT CONTROL STANDARDS PRIOR TO THE ISSUANCE OF A CERTIFICATE OF OCCUPANCY.
9. ROOF LEADER DOWNSPOUTS SHALL DISCHARGE TO SPLASH BLOCKS AT GRADE TO DIRECT RUNOFF TOWARD THE STREET, SO AS TO NOT IMPACT ADJACENT PROPERTIES.
10. SPECIAL ATTENTION SHALL BE GIVEN TO SWALES TO ENSURE POSITIVE RUNOFF AND NO PONDING ON PROPERTY.
11. A MINIMUM 2 % SLOPE SHALL BE MAINTAINED AWAY FROM BUILDING FOUNDATION.
12. ANY EXISTING CURB, SIDEWALK, PAVEMENT, UTILITY LINES AND/OR STORM DRAINAGE INFRASTRUCTURE DAMAGED AS A RESULT OF THIS PROJECT SHALL BE REPLACED AT THE DIRECTION OF THE MUNICIPAL ENGINEER PRIOR TO THE ISSUANCE OF A CERTIFICATE OF OCCUPANCY.
13. A ROAD OPENING PERMIT IS REQUIRED FROM THE DEPARTMENT OF PUBLIC WORKS PRIOR TO STARTING WORK IN THE RIGHT-OF-WAY, INCLUDING CURB, DRIVEWAY APRON, AND/OR SIDEWALK IMPROVEMENTS.
14. IT IS THE APPLICANT'S RESPONSIBILITY TO ENSURE ADHERENCE TO MUNICIPAL ORDINANCES AND TO FREEHOLD SOIL CONSERVATION DISTRICT REGULATIONS REGARDING SOIL EROSION AND SEDIMENT CONTROL MEASURES. APPLICANT SHALL COMPLY WITH FEDERAL, STATE, COUNTY, NJDEP AND LOCAL REGULATIONS PRIOR TO ANY CONSTRUCTION ON THE PROPERTY.
15. SHOULD ANY PORTION OF THE POST-DEVELOPMENT IMPROVEMENTS IMPACT DRAINAGE CONDITIONS ON THE LOT OR ADJACENT PROPERTIES, THE APPLICANT WILL BE REQUIRED TO SUBMIT ADDITIONAL AS-BUILT SURVEYS AND SUBSEQUENTLY CORRECT ANY DEFICIENCIES AT THE DIRECTION OF THE BOROUGH ENGINEER.
16. ANY DEVIATIONS FROM THE APPROVED GRADING PLAN, INCLUDING FLIPPING HOUSE AND DRIVEWAY MODIFICATIONS, REQUIRE WRITTEN NOTICE TO THE BOROUGH ENGINEER'S OFFICE AND ARE SUBJECT TO REVIEW.
17. ALL CONSTRUCTION APPROVALS AND THE ISSUANCE OF A CERTIFICATE OF OCCUPANCY ARE SUBJECT TO FINAL INSPECTION BY THE BOROUGH ENGINEER AND BUILDING DEPARTMENT OFFICIALS.

OWNER / APPLICANT:
HOME & LAND DEVELOPMENT CORP.
88-1 PORTLAND ROAD
HIGHLANDS, NJ 07732

10 0 10 20
SCALE IN FEET
(1"=10')

No.	DATE	REVISION	BY

EASTERN CIVIL ENGINEERING, LLC
CIVIL ENGINEERING · SURVEYING & MAPPING · LAND USE PLANNING · SITE DESIGN
31 GRAND TOUR, HIGHLANDS NJ 07732 PHONE: 732.872.7736

GRADING PLAN FOR
HOME & LAND. DEVELOPMENT CORP.
BLOCK 35 LOT 8
TAX MAP SHEET No. 10
HIGHLANDS BOROUGH, MONMOUTH COUNTY, NEW JERSEY

ANDREW R. STOCKTON
PROFESSIONAL ENGINEER & LAND SURVEYOR
NEW JERSEY LIC. NO. 35405

DATE:	SCALE:	DESIGN BY:	PROJECT NO.:	SHEET NO.
2-10-22	1" = 10'	ARS	2101980	1 of 1

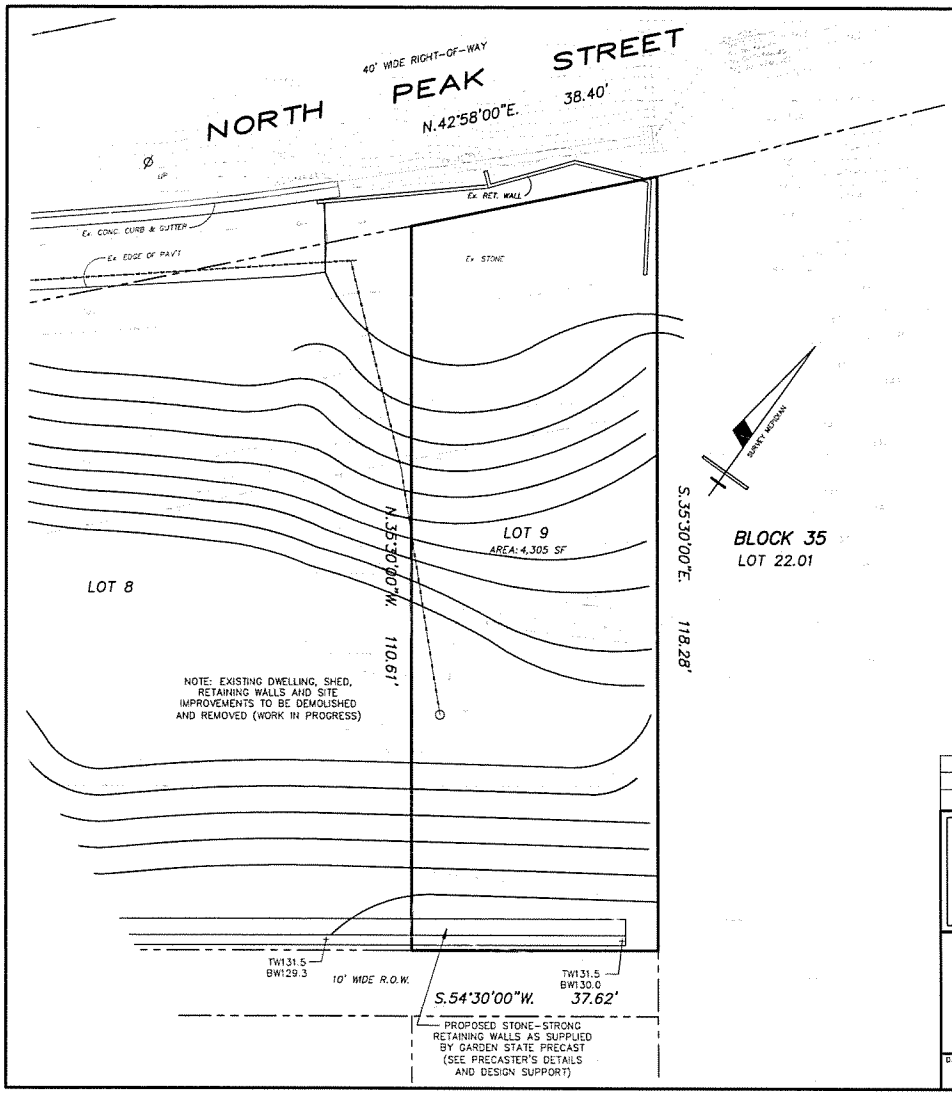

GENERAL NOTES

1. THE SUBJECT PROPERTY IS KNOWN AS LOT 9 IN BLOCK 35 AS SHOWN ON SHEET 10 OF THE CURRENT TAX MAP FOR HIGHLANDS BOROUGH, MONMOUTH COUNTY, NEW JERSEY.
2. TOPOGRAPHIC SURVEY INFORMATION SHOWN HEREON IS BASED ON FIELD SURVEY MADE ON THE GROUND BY EASTERN CIVIL ENGINEERING, LLC DATED 9-22-21. ELEVATIONS SHOWN HEREON REFER TO NORTH AMERICAN VERTICAL DATUM OF 1988.
3. THE SUBJECT PROPERTY IS SITUATED IN THE R-1.01 RESIDENTIAL ZONE DISTRICT. APPLICANT PROPOSES TO DEMOLISH AND REMOVE EXISTING DWELLING, EXISTING RETAINING WALLS, PARKING AREAS AND EXISTING SITE IMPROVEMENTS. THEN CONSTRUCT A NEW RETAINING WALL AND YARD GRADING IN PREPARATION FOR FUTURE DEVELOPMENT.
4. PROPERTY OWNER'S GENERAL CONTRACTOR IS RESPONSIBLE FOR SITE GRADING AND CONSTRUCTION ACTIVITY. CONTRACTOR SHALL CONTACT NJ ONE CALL SYSTEM AT (800)272-1000 FOR UTILITY MARK-OUT PRIOR TO EXCAVATION ON-SITE OR WITHIN MUNICIPAL RIGHT-OF-WAY.
5. ATTENTION OF THE CONTRACTOR IS DIRECTED TO THE FACT THAT APPROXIMATE LOCATIONS OF KNOWN UTILITY STRUCTURES AND FACILITIES THAT MAY BE ENCOUNTERED WITHIN OR ADJACENT TO THE SUBJECT PROPERTY OR LIMITS OF WORK ARE SHOWN ON THE PLANS. THE ACCURACY AND COMPLETENESS OF THIS INFORMATION IS NOT GUARANTEED BY THE ENGINEER. CONTRACTOR IS ADVISED TO VERIFY IN THE FIELD ALL THE FACTS CONCERNING THE LOCATION AND GRADE OF THESE UTILITIES OR OTHER CONSTRUCTION OBSTACLES PRIOR TO STARTING WORK. CONTRACTOR SHALL NOTIFY THE ENGINEER IN WRITING OF ANY DISCREPANCIES THAT MAY AFFECT THE PROJECT DESIGN.
6. CONTRACTOR IS RESPONSIBLE FOR SITE SAFETY, INCLUDING PROVISIONS FOR APPROPRIATE SAFETY DEVICES AND REQUIRED TRAINING.
7. SILT FENCE SHALL BE PLACED AROUND THE PERIMETER OF THE LIMITS OF WORK AS SHOWN ON THE PLAN AND SHALL REMAIN IN PLACE UNTIL THE LIMITS OF WORK ARE PERMANENTLY STABILIZED.
8. SOIL SHALL BE PERMANENTLY STABILIZED (SEEDED/SODDED) IN ACCORDANCE WITH CURRENT NJ SOIL EROSION AND SEDIMENT CONTROL STANDARDS PRIOR TO THE ISSUANCE OF A CERTIFICATE OF OCCUPANCY.
9. ROOF LEADER DOWNSPOUTS SHALL DISCHARGE TO SPLASH BLOCKS AT GRADE TO DIRECT RUNOFF TOWARD THE STREET, SO AS TO NOT IMPACT ADJACENT PROPERTIES.
10. SPECIAL ATTENTION SHALL BE GIVEN TO SWALES TO ENSURE POSITIVE RUNOFF AND NO PONDING ON PROPERTY.
11. A MINIMUM 2 % SLOPE SHALL BE MAINTAINED AWAY FROM BUILDING FOUNDATION.
12. ANY EXISTING CURB, SIDEWALK, PAVEMENT, UTILITY LINES AND/OR STORM DRAINAGE INFRASTRUCTURE DAMAGED AS A RESULT OF THIS PROJECT SHALL BE REPLACED AT THE DIRECTION OF THE MUNICIPAL ENGINEER PRIOR TO THE ISSUANCE OF A CERTIFICATE OF OCCUPANCY.
13. A ROAD OPENING PERMIT IS REQUIRED FROM THE DEPARTMENT OF PUBLIC WORKS PRIOR TO STARTING WORK IN THE RIGHT-OF-WAY, INCLUDING CURB, DRIVEWAY APRON, AND/OR SIDEWALK IMPROVEMENTS.
14. IT IS THE APPLICANT'S RESPONSIBILITY TO ENSURE ADHERENCE TO MUNICIPAL ORDINANCES AND TO FREEHOLD SOIL CONSERVATION DISTRICT REGULATIONS REGARDING SOIL EROSION AND SEDIMENT CONTROL MEASURES. APPLICANT SHALL COMPLY WITH FEDERAL, STATE, COUNTY, NJDEP AND LOCAL REGULATIONS PRIOR TO ANY CONSTRUCTION ON THE PROPERTY.
15. SHOULD ANY PORTION OF THE POST-DEVELOPMENT IMPROVEMENTS IMPACT DRAINAGE CONDITIONS ON THE LOT OR ADJACENT PROPERTIES, THE APPLICANT WILL BE REQUIRED TO SUBMIT ADDITIONAL AS-BUILT SURVEYS AND SUBSEQUENTLY CORRECT ANY DEFICIENCIES AT THE DIRECTION OF THE BOROUGH ENGINEER.
16. ANY DEVIATIONS FROM THE APPROVED GRADING PLAN, INCLUDING FLIPPING HOUSE AND DRIVEWAY MODIFICATIONS, REQUIRE WRITTEN NOTICE TO THE BOROUGH ENGINEER'S OFFICE AND ARE SUBJECT TO REVIEW.
17. ALL CONSTRUCTION APPROVALS AND THE ISSUANCE OF A CERTIFICATE OF OCCUPANCY ARE SUBJECT TO FINAL INSPECTION BY THE BOROUGH ENGINEER AND BUILDING DEPARTMENT OFFICIALS.

OWNER / APPLICANT:
HOME & LAND DEVELOPMENT CORP.
88-1 PORTLAND ROAD
HIGHLANDS, NJ 07732

10 0 10 20
SCALE IN FEET
(1"=10')

No.	DATE	REVISION	BY

EASTERN CIVIL ENGINEERING, LLC
CIVIL ENGINEERING SURVEYING & MAPPING LAND USE PLANNING SITE DESIGN
31 GRAND TOUR, HIGHLANDS NJ 07732 PHONE: 732.872.7736

GRADING PLAN FOR
HOME & LAND. DEVELOPMENT CORP.
BLOCK 35 LOT 9
TAX MAP SHEET No. 10
HIGHLANDS BOROUGH, MONMOUTH COUNTY, NEW JERSEY

ANDREW R. STOCKTON
PROFESSIONAL ENGINEER & LAND SURVEYOR
NEW JERSEY LIC. NO. 35405

DATE:	SCALE:	DESIGN BY:	PROJECT NO.:	SHEET NO.
2-10-22	1" = 10'	ARS	2101980	1 of 1

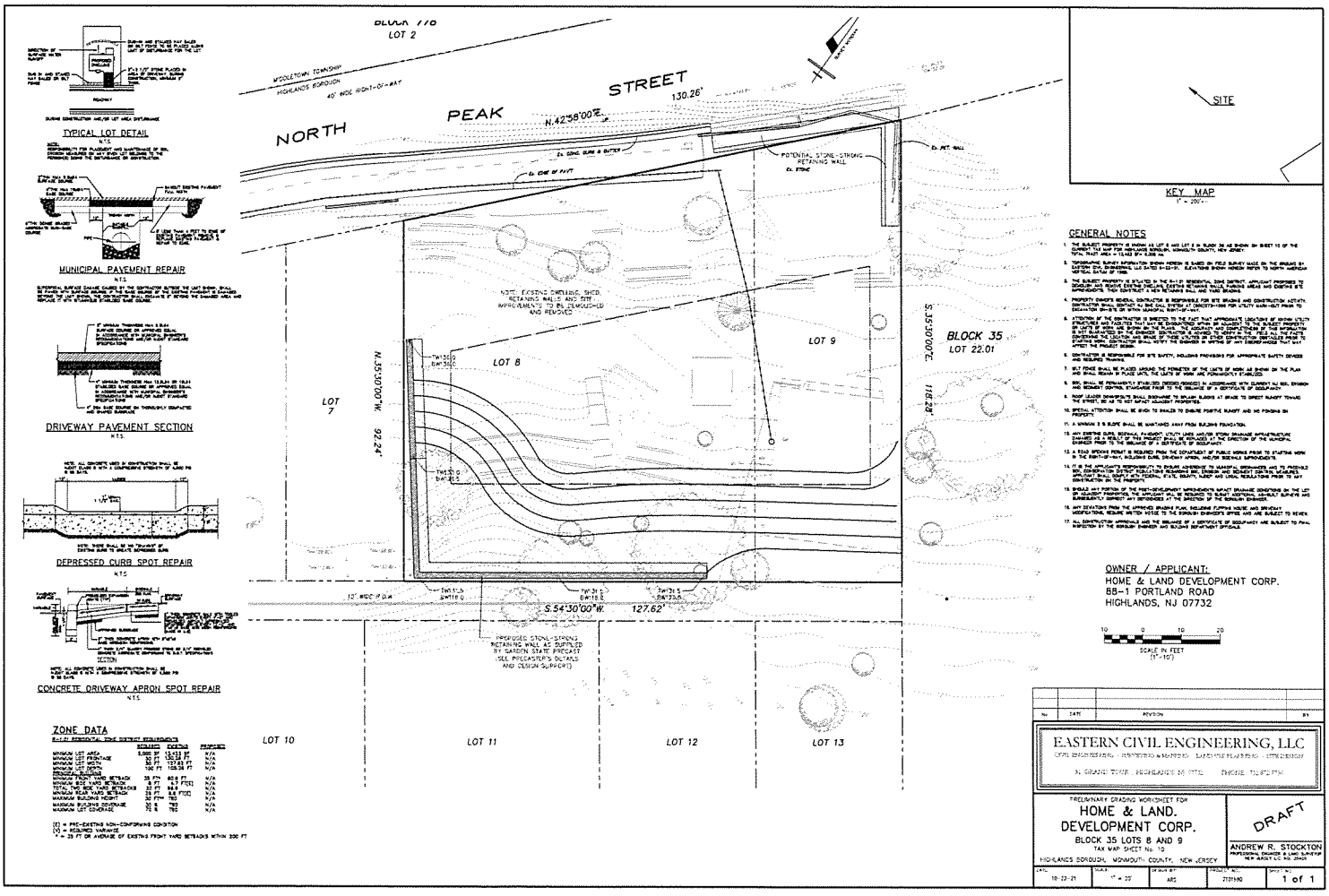

TYPICAL LOT DETAIL
MUNICIPAL PAVEMENT REPAIR
DRIVEWAY PAVEMENT SECTION
DEPRESSED CURB SPOT REPAIR
CONCRETE DRIVEWAY APRON SPOT REPAIR
ZONE DATA
NORTH PEAK STREET
LOT 2
LOT 7
LOT 8
LOT 9
LOT 10
LOT 11
LOT 12
LOT 13
BLOCK 35
LOT 22.01
N.42°58'00"E.
130.26'
N.35°30'00"W.
92.24'
S.35°30'00"E.
118.28'
S.54°30'00"W.
127.62'
KEY MAP
SITE
GENERAL NOTES
OWNER / APPLICANT:
HOME & LAND DEVELOPMENT CORP.
88-1 PORTLAND ROAD
HIGHLANDS, NJ 07732
SCALE IN FEET
EASTERN CIVIL ENGINEERING, LLC
PRELIMINARY GRADING WORKSHEET FOR
HOME & LAND.
DEVELOPMENT CORP.
BLOCK 35 LOTS 8 AND 9
TAX MAP SHEET No. 10
HIGHLANDS BOROUGH, MONMOUTH COUNTY, NEW JERSEY
DRAFT
ANDREW R. STOCKTON
1 of 1

PLOT PLAN
FOR
32 NORTH PEAK STREET
BLOCK 35, LOTS 8 & 9
SITUATED IN
BOROUGH OF HIGHLANDS, MONMOUTH COUNTY, NEW JERSEY

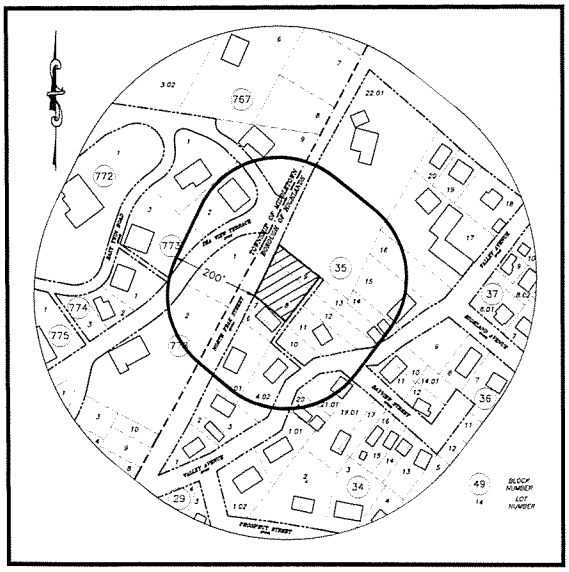

KEY MAP
SCALE: 1"=100'

PROPERTY OWNERS WITHIN 200 LF

LIST OF OWNERS WITHIN 200 FEET			LIST OF OWNERS WITHIN 200 FEET (CONTINUED)		
BLOCK	LOT	PROPERTY OWNER	BLOCK	LOT	PROPERTY OWNER
758	1.01	MONMOUTH HILLS INC. ACCESS PROP MGMT 1000 DIVE SCHOOLS POST RD CLINTON, NJ 08809	35	12.01	BOSCO RICHARD D MICHELE 20 NAVESINK AVENUE HIGHLANDS, NJ 07732
758	1	MONMOUTH HILLS INC. ACCESS PROP MGMT 1000 DIVE SCHOOLS POST RD CLINTON, NJ 08809	35	4.02	BALDINI PATRICK FRANCIS & PAULA ANN 119 VALLEY AVENUE HIGHLANDS, NJ 07732
35	4	ALVAREZ DIANA 10 NORTH PEAK STREET HIGHLANDS, NJ 07732	35	14	MATZ EDWARD W & CHRISTINE 82 VALLEY AVENUE HIGHLANDS, NJ 07732
35	10	DORN JOSEPH & JOSEPH DORN LE 102 VALLEY AVENUE HIGHLANDS, NJ 07732	767	2	FARROW LOUISA J & ESTE 9 74 ESE AVE MIDDLETOWN, NJ 07748
35	12	DORN JOSEPH & JOSEPH DORN LE 102 VALLEY AVENUE HIGHLANDS, NJ 07732	778	2	DIAZ, MICHAEL & SCOTT 24 BAY KEY TERR HIGHLANDS, NJ 07732
35	8	FELDMAN JERRY 350 W BROADWAY SQUARE BOYNTON BEACH, FL 33435	774	1	WOLFF COLLEEN ANN 28 E 7TH ST HIGHLANDS, NJ 07732
35	14	NEWMAN DR. RONALD & NANCY 94 VALLEY AVENUE HIGHLANDS, NJ 07732	772	2	SCHMIDT ERIC 28 BAYVIEW TERR HIGHLANDS, NJ 07732
34	16	109 VALLEY AVE LLC 12 JAMES LANE LITTLE EGG HARBOR, NJ 08087	772	3	GLASS KEITH 27 E 7TH ST HIGHLANDS, NJ 07732
35	7	ALVAREZ DIANA 10 NORTH PEAK STREET HIGHLANDS, NJ 07732	35	16	ROSSEN JERRY & WILDISH DENISE 76 VALLEY AVE HIGHLANDS, NJ 07732
34	1.02	LOWEN JERRY & MARTA 111 VALLEY AVE HIGHLANDS, NJ 07732	35	17	VALLEY VIEW MANAGEMENT LLC 82 VALLEY AVENUE HIGHLANDS, NJ 07732
34	21.01	MANCE PETER 102 VALLEY AVE HIGHLANDS, NJ 07732	35	4.01	JOHNSON EDWARD 3 1 NORTH PEAK STREET HIGHLANDS, NJ
35	11	DORN JOSEPH & JOSEPH DORN 102 VALLEY AVENUE HIGHLANDS, NJ 07732	772	1	PLANT MATTER M & MARTAMARIA 28 E 7TH ROAD HIGHLANDS, NJ 07732
35	9	HOME & LAND DEVELOPMENT CORP 89-1 POPLAR ROAD HIGHLANDS, NJ 07732	767	1	
35	11	BOHAN GARY & PAMELA 97 VALLEY AVE HIGHLANDS, NJ 07732	81	10	
35	13	BORNE BEATRICE 91 VALLEY AVENUE HIGHLANDS, NJ 07732	81	10.01	

ZONE REQUIREMENTS

R-1.01 ZONE SINGLE-FAMILY RESIDENTIAL	MAIN ZONE REQUIREMENTS	PROPOSED LOT 8	PROPOSED LOT 9
MINIMUM LOT SIZE (SF)	5,000 S.F.	7,775.31 S.F.	5,656.89 S.F.
MINIMUM LOT FRONTAGE/WIDTH (FT)	50 FT.	78.33 FT.	50.63 FT.
MINIMUM LOT DEPTH (FT)	100 FT.	108.08 FT.	119.29 FT.
MINIMUM FRONT SETBACK (FT)	35 FT.	36.4 FT.	131.8 FT.
MINIMUM SIDE SETBACK (FT)	8/13 FT.	8.3/13 FT.	8.3/13 FT.
MINIMUM REAR SETBACK (FT)	35 FT.	35 FT.	35 FT.
MAXIMUM BUILDING HEIGHT (FT)	30 FT.	<30 FT.	<30 FT.
MAXIMUM LOT COVER (%)	70%	36.0%	34.3%
MAXIMUM BUILDING COVERAGE (%)	30%	26.1%	32.8%
*** MAXIMUM LOT COVERAGE (%)	33.4%, 40.8%	134.0%	34.3%
**** MAXIMUM IMPERVIOUS COVERAGE (%)	18.8%, 31.3%	134.0%	134.3%

* VARIANCE REQUIRED
** EXISTING NONCONFORMING CONDITION
*** PER STATE RULES, ORDINANCE AND CALCULATIONS

INDEX OF UTILITIES

UTILITY AND GOVERNMENTAL AGENCY TO BE NOTIFIED

JCP&L
300 MADISON AVENUE
PO BOX 1911
MORRISTOWN, NJ 07960

NEW JERSEY AMERICAN WATER COMPANY
ATTN: CONSTRUCTION DEPARTMENT
661 SHREWSBURY AVE.
SHREWSBURY, NJ 07702

COMCAST COMMUNICATIONS OF MONMOUTH COUNTY
RON BERTRAND, CONSTRUCTION FOREMAN
451 SOUTH ST.
LAKEWOOD, NJ 07724

VERIZON COMMUNICATIONS
ONE VERIZON WAY
BASKING RIDGE, NJ 07920

TOWNSHIP OF MIDDLETOWN SEWERAGE AUTHORITY
RAYMOND J. HERSTEDT, P.E., EXECUTIVE DIRECTOR
PO BOX 208, 100 BEVERLY WAY
BELFORD, NJ 07718

NJ NATURAL GAS COMPANY
PO BOX 1464, 1415 WYCKOFF ROAD
WALL, NJ 07719

MONMOUTH COUNTY BAYSHORE OUTFALL AUTHORITY
ATTN: EXECUTIVE DIRECTOR
PO BOX 184, 200 HARBOR WAY
BELFORD, NJ 07718

SURVEY/SUBDIVISION REFERENCES:

1. BOUNDARY AND TOPOGRAPHIC INFORMATION TAKEN FROM A PLAN ENTITLED "PRELIMINARY GRADING WORKSHEET FOR HOME & LAND DEVELOPMENT CORP. BLOCK 35 LOTS 9 AND 8, TAX MAP SHEET NO. 10, HIGHLANDS BOROUGH, MONMOUTH COUNTY, NEW JERSEY", PREPARED BY EASTERN ENVIRONMENTAL, LLC, SIGNED AND/OR SEALED BY THOMAS P. SMITH, P.E., LICENSE NO. 24GE04340900, DATED 07-29-2022, REVISED THROUGH 11-30-2022.
2. ADDITIONAL INFORMATION TAKEN FROM A SURVEY ENTITLED "SURVEY OF LOTS 8 & 9 — BLOCK 35, 32 & 14 NORTH PEAK STREET, BOROUGH OF HIGHLANDS, MONMOUTH COUNTY, NEW JERSEY", PREPARED BY THOMAS P. SMITH, P.A., SURVEYORS AND PLANNERS, DATED 07-08-2022.

SURVEY NOTES:

1. BOUNDARY AND TOPOGRAPHIC INFORMATION TAKEN FROM A PLAN ENTITLED "PRELIMINARY GRADING WORKSHEET FOR HOME & LAND DEVELOPMENT CORP. BLOCK 35 LOTS 9 AND 8, TAX MAP SHEET NO. 10, HIGHLANDS BOROUGH, MONMOUTH COUNTY, NEW JERSEY", PREPARED BY EASTERN ENVIRONMENTAL, LLC, SIGNED AND/OR SEALED BY THOMAS P. SMITH, P.E., N.J.P.E., LICENSE NO. 24GE04340900, DATED 07-29-2022, REVISED THROUGH 11-30-2022.
2. ELEVATIONS ARE BASED ON NAVD88 DATUM.

SUBDIVISION NOTES:

1. TOPOGRAPHIC AND GRADING DEPARTED FROM A COTTEMA MAP ENTITLED "GRADING PLAN FOR HOME & LAND DEVELOPMENT CORP. BLOCK 35 LOT 9" DATED MAP WAS DRAWN BY EASTERN ENVIRONMENTAL, LLC ON 2/15/22, PROJECT NO. 21215140
2. SILT FENCE SHALL BE PLACED AROUND THE PERIMETER OF THE LIMITS OF DISTURBANCE AND REMAIN UNTIL SOIL IS STABILIZED
3. APPLICANT TO REPAIR ANY DAMAGED CURB OR PAVEMENT AS PART OF CONSTRUCTION
4. ELEVATIONS SHOWN HEREON REFER TO NORTH AMERICAN VERTICAL DATUM OF 1988
5. WARNER MEDIATED STEEP SLOPES ANALYSIS.
6. NO WETLANDS EXIST ON THIS PROPERTY (SHEET 1 OF 2)

INDEX OF SHEETS

SHEET No.	TITLE
1	COVER SHEET
2	PLOT PLAN
3	UTILITY PLAN
4	SANITARY PLAN AND PROFILE
5	SLOPE ANALYSIS PLAN
6	SOIL EROSION AND SEDIMENT CONTROL PLAN
7	SOIL EROSION AND SEDIMENT CONTROL NOTES AND DETAILS

COVER SHEET

REVISIONS	
DATE	DESCRIPTION

THE OWNER AND CONTRACTOR SHALL HOLD HARMLESS THE ENGINEER FROM AND AGAINST ALL CLAIMS, DAMAGES, LOSSES AND EXPENSES INCLUDING ATTORNEY'S FEES ARISING OUT OF OR RESULTING FROM THE PERFORMANCE OF THE WORK BY THE CONTRACTOR. CHANGES TO THE PLANS BY THE OWNER AND THE CONTRACTOR SHALL BE THE RESPONSIBILITY OF THE PERSONS MAKING SUCH CHANGES. THE CONTRACTOR SHALL CHECK AND VERIFY ALL PLAN DIMENSIONS AND CONDITIONS BEFORE PROCEEDING WITH CONSTRUCTION.

32 NORTH PEAK STREET
BLOCK 35, LOTS 8 & 9
SITUATED IN
BOROUGH OF HIGHLANDS
MONMOUTH COUNTY, NEW JERSEY

GROTTO ENGINEERING ASSOCIATES, LLC
ENGINEERS - PLANNERS - SURVEYORS
77 BRANT AVENUE • SUITE 103
CLARK, NEW JERSEY 07066
908-272-0991 (F) 908-272-8992

FRANK W. FARRELL
PROFESSIONAL ENGINEER
NEW JERSEY LICENSE NO. GE21664

DATE: 04-08-2024	SCALE: AS SHOWN	DRAWN: AJC	CHECKED: FF	SHEET: 1 OF 8	JOB: PR-0390

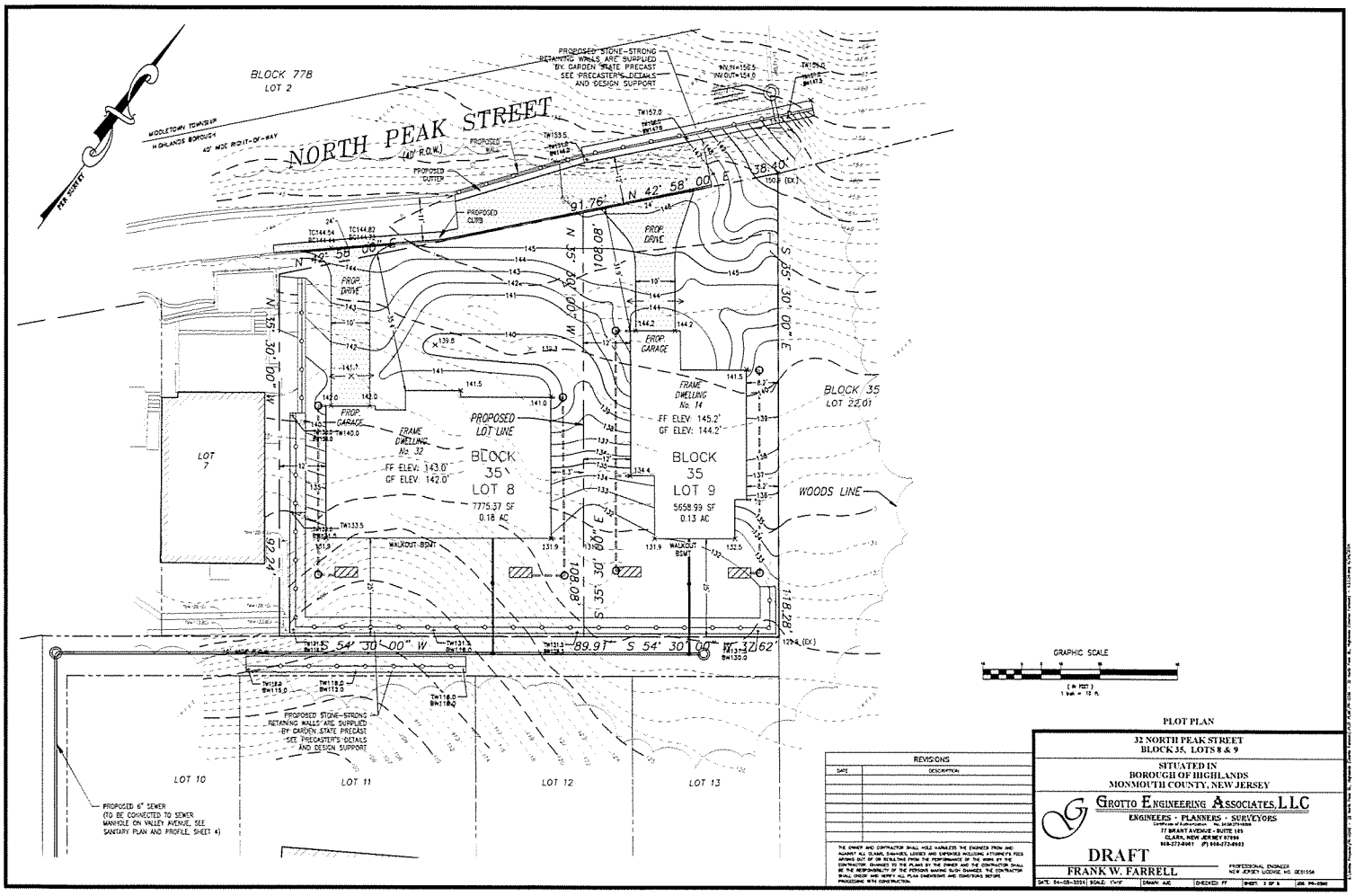
BLOCK 778
LOT 2
NORTH PEAK STREET
(40' R.O.W.)
MIDDLETOWN TOWNSHIP
HIGHLANDS BOROUGH
40' WIDE RIGHT-OF-WAY
PROPOSED STONE-STRONG RETAINING WALLS ARE SUPPLIED BY GARDEN STATE PRECAST SEE PRECASTER'S DETAILS AND DESIGN SUPPORT
PROPOSED CUTTER
PROPOSED CURB
N 42° 58' 00" E
91.76'
38.40'
PROP. DRIVE
PROP. GARAGE
FRAME DWELLING No. 32
FF ELEV: 143.0'
GF ELEV: 142.0'
PROPOSED LOT LINE
BLOCK 35
LOT 8
7775.37 SF
0.18 AC
FRAME DWELLING No. 14
FF ELEV: 145.2'
GF ELEV: 144.2'
BLOCK 35
LOT 9
5658.99 SF
0.13 AC
BLOCK 35
LOT 22.01
WOODS LINE
LOT 7
N 35° 30' 00" W
S 35° 30' 00" E
108.08'
92.24'
118.28'
S 54° 30' 00" W
89.91'
S 54° 30' 00" W
32.62'
WALKOUT BSMT
LOT 10
LOT 11
LOT 12
LOT 13
PROPOSED 6" SEWER (TO BE CONNECTED TO SEWER MANHOLE ON VALLEY AVENUE, SEE SANITARY PLAN AND PROFILE, SHEET 4)
GRAPHIC SCALE
PLOT PLAN
32 NORTH PEAK STREET
BLOCK 35, LOTS 8 & 9
SITUATED IN
BOROUGH OF HIGHLANDS
MONMOUTH COUNTY, NEW JERSEY
GROTTO ENGINEERING ASSOCIATES, LLC
ENGINEERS · PLANNERS · SURVEYORS
DRAFT
FRANK W. FARRELL
REVISIONS

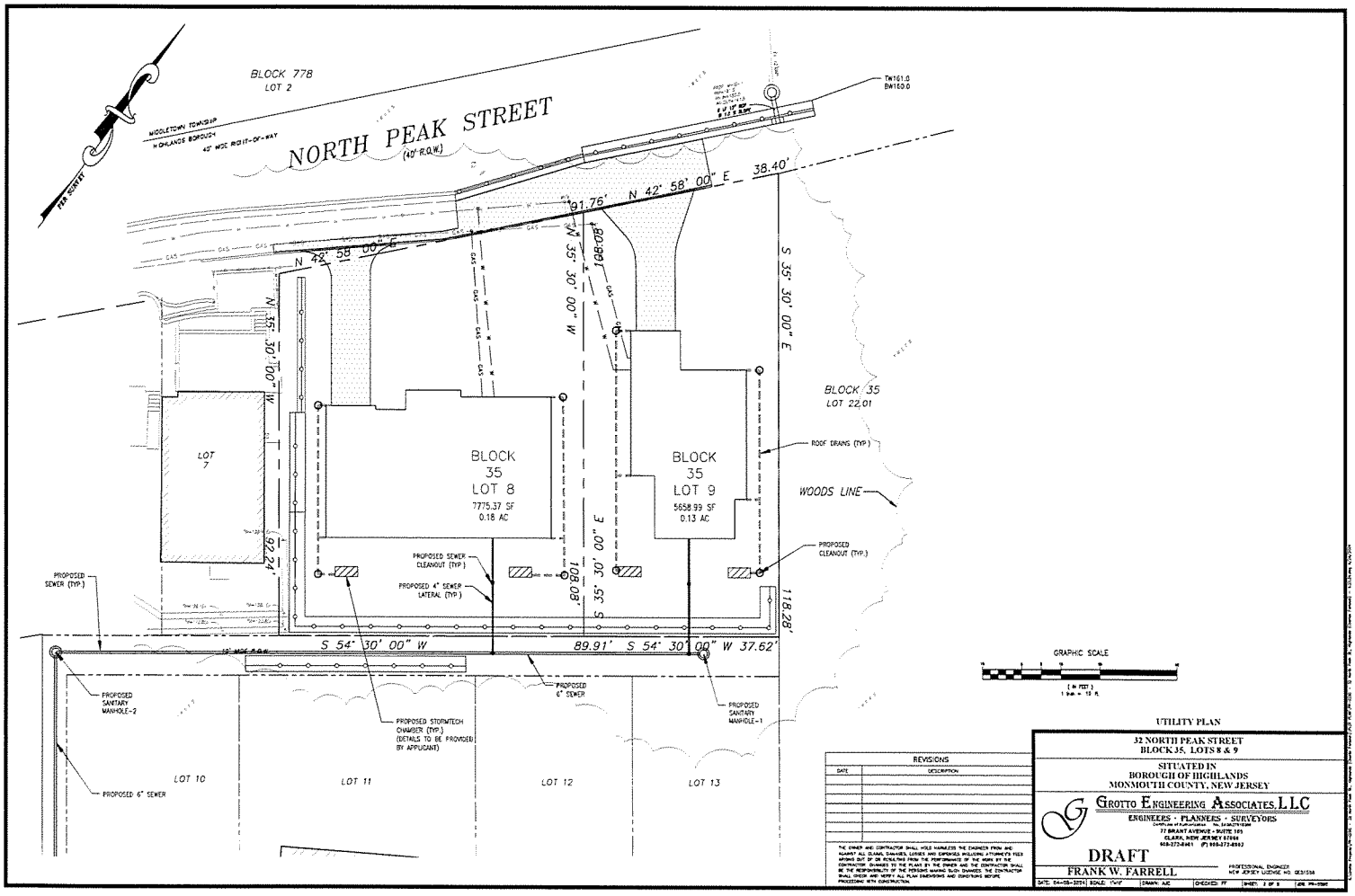
BLOCK 778
LOT 2
NORTH PEAK STREET
(40' R.O.W.)
MIDDLETOWN TOWNSHIP
HIGHLANDS BOROUGH
45° NSE RIGHT-OF-WAY
PER SURVEY
Tw161.0
Bw160.0
N 42° 58' 00" E 38.40'
91.76'
N 42° 58' 00" E
N 35° 30' 00" W 108.08'
S 35° 30' 00" E
N 15° 30' 00" W 92.24'
BLOCK 35
LOT 22.01
LOT 7
BLOCK 35 LOT 8
7775.37 SF
0.18 AC
BLOCK 35 LOT 9
5658.99 SF
0.13 AC
ROOF DRAINS (TYP.)
WOODS LINE
PROPOSED CLEANOUT (TYP.)
PROPOSED SEWER CLEANOUT (TYP.)
PROPOSED 4" SEWER LATERAL (TYP.)
PROPOSED SEWER (TYP.)
S 54° 30' 00" W 89.91'
S 54° 30' 00" W 37.62'
S 35° 30' 00" E 118.28'
PROPOSED SANITARY MANHOLE-2
PROPOSED STORMTECH CHAMBER (TYP.) (DETAILS TO BE PROVIDED BY APPLICANT)
PROPOSED 6" SEWER
PROPOSED SANITARY MANHOLE-1
LOT 10
LOT 11
LOT 12
LOT 13
GRAPHIC SCALE
1 Inch = 10 ft.
UTILITY PLAN
32 NORTH PEAK STREET
BLOCK 35, LOTS 8 & 9
SITUATED IN
BOROUGH OF HIGHLANDS
MONMOUTH COUNTY, NEW JERSEY
GROTTO ENGINEERING ASSOCIATES, LLC
ENGINEERS • PLANNERS • SURVEYORS
77 BRANT AVENUE • SUITE 105
CLARK, NEW JERSEY 07066
908-273-8461 (F) 908-272-8552
DRAFT
FRANK W. FARRELL
PROFESSIONAL ENGINEER
NEW JERSEY LICENSE NO. GE31594
REVISIONS
DATE
DESCRIPTION
DRAWN: AJC
CHECKED: FF

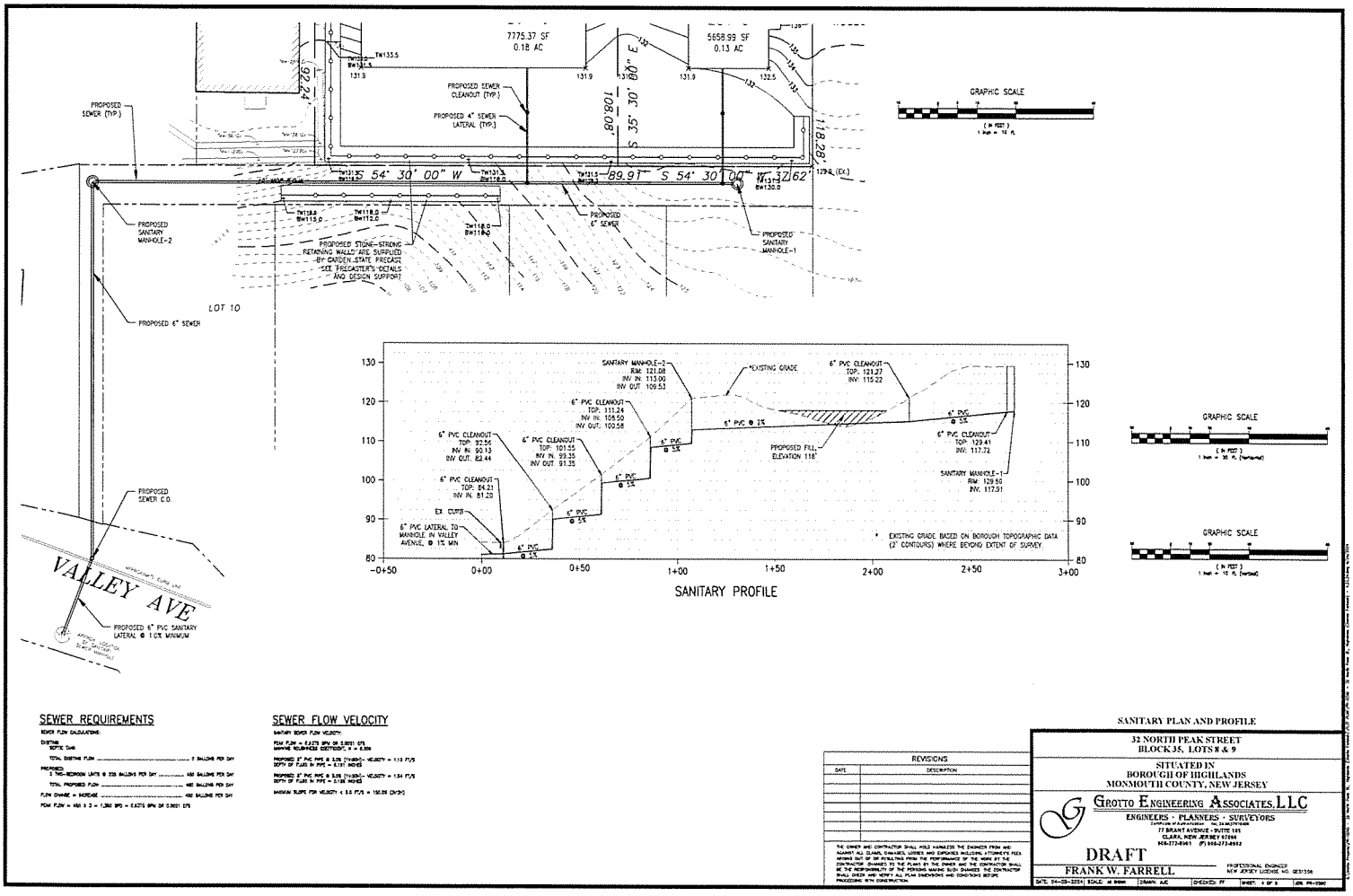
7775.37 SF
0.18 AC
5658.99 SF
0.13 AC
PROPOSED SEWER CLEANOUT (TYP.)
PROPOSED 4" SEWER LATERAL (TYP.)
PROPOSED SEWER (TYP.)
PROPOSED SANITARY MANHOLE-2
PROPOSED 6" SEWER
PROPOSED SANITARY MANHOLE-1
PROPOSED STONE-STRONG RETAINING WALLS ARE SUPPLIED BY GARDEN STATE PRECAST SEE PRECASTER'S DETAILS AND DESIGN SUPPORT
LOT 10
PROPOSED 6" SEWER
PROPOSED SEWER C.O.
VALLEY AVE
PROPOSED 6" PVC SANITARY LATERAL @ 1.0% MINIMUM
GRAPHIC SCALE
SANITARY MANHOLE-2 RIM: 121.08 INV IN: 113.00 INV OUT: 109.53
*EXISTING GRADE
6" PVC CLEANOUT TOP: 121.27 INV: 115.22
6" PVC CLEANOUT TOP: 111.24 INV IN: 108.50 INV OUT: 100.58
6" PVC CLEANOUT TOP: 92.56 INV IN: 90.13 INV OUT: 82.44
6" PVC CLEANOUT TOP: 101.55 INV IN: 99.35 INV OUT: 91.35
6" PVC CLEANOUT TOP: 84.21 INV IN: 81.20
EX. CURB
6" PVC LATERAL TO MANHOLE IN VALLEY AVENUE, @ 1% MIN
PROPOSED FILL ELEVATION 118'
6" PVC CLEANOUT TOP: 129.41 INV: 117.72
SANITARY MANHOLE-1 RIM: 129.50 INV: 117.91
* EXISTING GRADE BASED ON BOROUGH TOPOGRAPHIC DATA (2' CONTOURS) WHERE BEYOND EXTENT OF SURVEY.
SANITARY PROFILE
SEWER REQUIREMENTS
SEWER FLOW VELOCITY
REVISIONS
SANITARY PLAN AND PROFILE
32 NORTH PEAK STREET
BLOCK 35, LOTS 8 & 9
SITUATED IN
BOROUGH OF HIGHLANDS
MONMOUTH COUNTY, NEW JERSEY
GROTTO ENGINEERING ASSOCIATES, LLC
ENGINEERS · PLANNERS · SURVEYORS
DRAFT
FRANK W. FARRELL

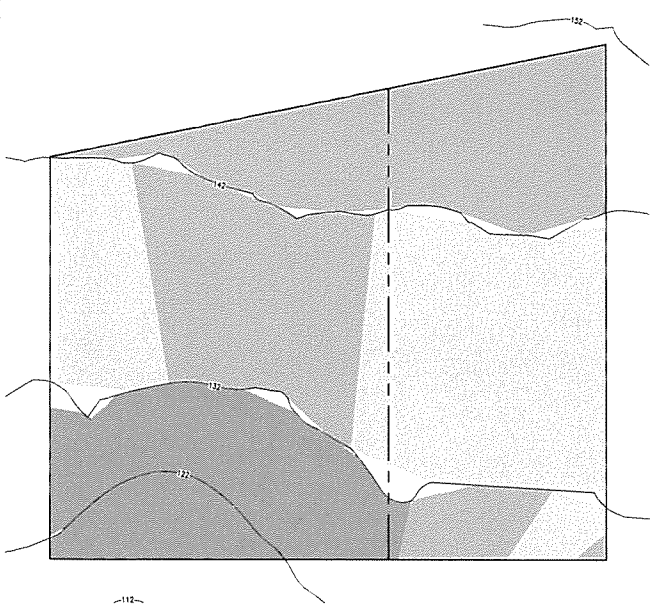

EXISTING SLOPES

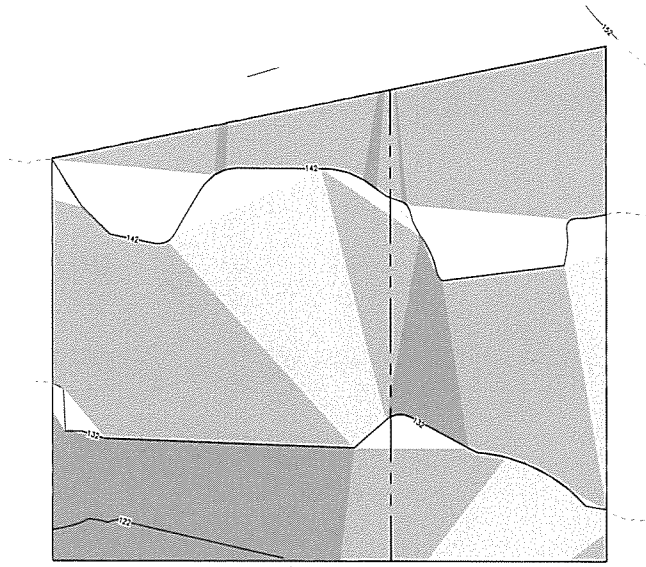

PROPOSED SLOPES

EXISTING SLOPE TABLE (BASED ON 10' CONTOURS, ELEV. 112' TO 162')

NUMBER	MINIMUM SLOPE	MAXIMUM SLOPE	COLOR	AREA (SF)	AREA (AC)
1	30.00%	1000.00%		5,753	0.043
2	30.00%	30.00%		5,363	0.138
3	15.00%	30.00%		4,722	0.109
4	5.00%	15.00%		387	0.009

PROPOSED SLOPE TABLE (BASED ON 10' CONTOURS, ELEV. 112' TO 162')

NUMBER	MINIMUM SLOPE	MAXIMUM SLOPE	COLOR	AREA (SF)	AREA (AC)
1	30.00%	1000.00%		5,438	0.088
2	30.00%	30.00%		7,304	0.168
3	15.00%	30.00%		3,304	0.084
4	5.00%	15.00%		1,438	0.033

SURVEY NOTES

1. BOUNDARY AND TOPOGRAPHIC INFORMATION TAKEN FROM A PLAN ENTITLED "PRELIMINARY GRADING WORKSHEET FOR HOME & LAND DEVELOPMENT CORP. BLOCK 35 LOTS 8 AND 9, TAX MAP SHEET NO. 10, HIGHLANDS BOROUGH, MONMOUTH COUNTY, NEW JERSEY", PREPARED BY EASTON CIVIL ENGINEERING, LLC, SIGNED ANDREW R. STOUFFER, P.E., N.J.P.E.L. LICENSE No. 20400, DATED 12-02-2021.
2. ELEVATIONS ARE BASED ON NAVD88 DATUM.

GRAPHIC SCALE

(IN FEET)
1 inch = 10 ft.

REVISIONS

DATE	DESCRIPTION

THE OWNER AND CONTRACTOR SHALL HOLD HARMLESS THE ENGINEER FROM AND AGAINST ALL CLAIMS, DAMAGES, LOSSES AND EXPENSES INCLUDING ATTORNEY'S FEES ARISING OUT OF OR RESULTING FROM THE PERFORMANCE OF THE WORK BY THE CONTRACTOR. ENGINEER TO BE PLANT BY THE OWNER AND THE CONTRACTOR SHALL BE THE RESPONSIBILITY OF THE PERSONS WHICH CHANGES THE CONTRACTOR SHALL CHECK AND VERIFY ALL PLAN DIMENSIONS AND CONDITIONS BEFORE PROCEEDING WITH CONSTRUCTION.

SLOPE ANALYSIS PLAN

32 NORTH PEAK STREET
BLOCK 35, LOTS 8 & 9

SITUATED IN
BOROUGH OF HIGHLANDS
MONMOUTH COUNTY, NEW JERSEY

GROTTO ENGINEERING ASSOCIATES, LLC
ENGINEERS · PLANNERS · SURVEYORS
Certificate of Authorization No. 24GA27915800
77 BRANT AVENUE · SUITE 105
CLARK, NEW JERSEY 07066
908-272-0401 (F) 908-272-0802

DRAFT

FRANK W. FARRELL
PROFESSIONAL ENGINEER
NEW JERSEY LICENSE NO. GE51598

DATE: 04-09-2024	SCALE: 1"=40'	DRAWN: AJC	CHECKED: FF	SHEET: 5 OF 9	JOB: PR-0390

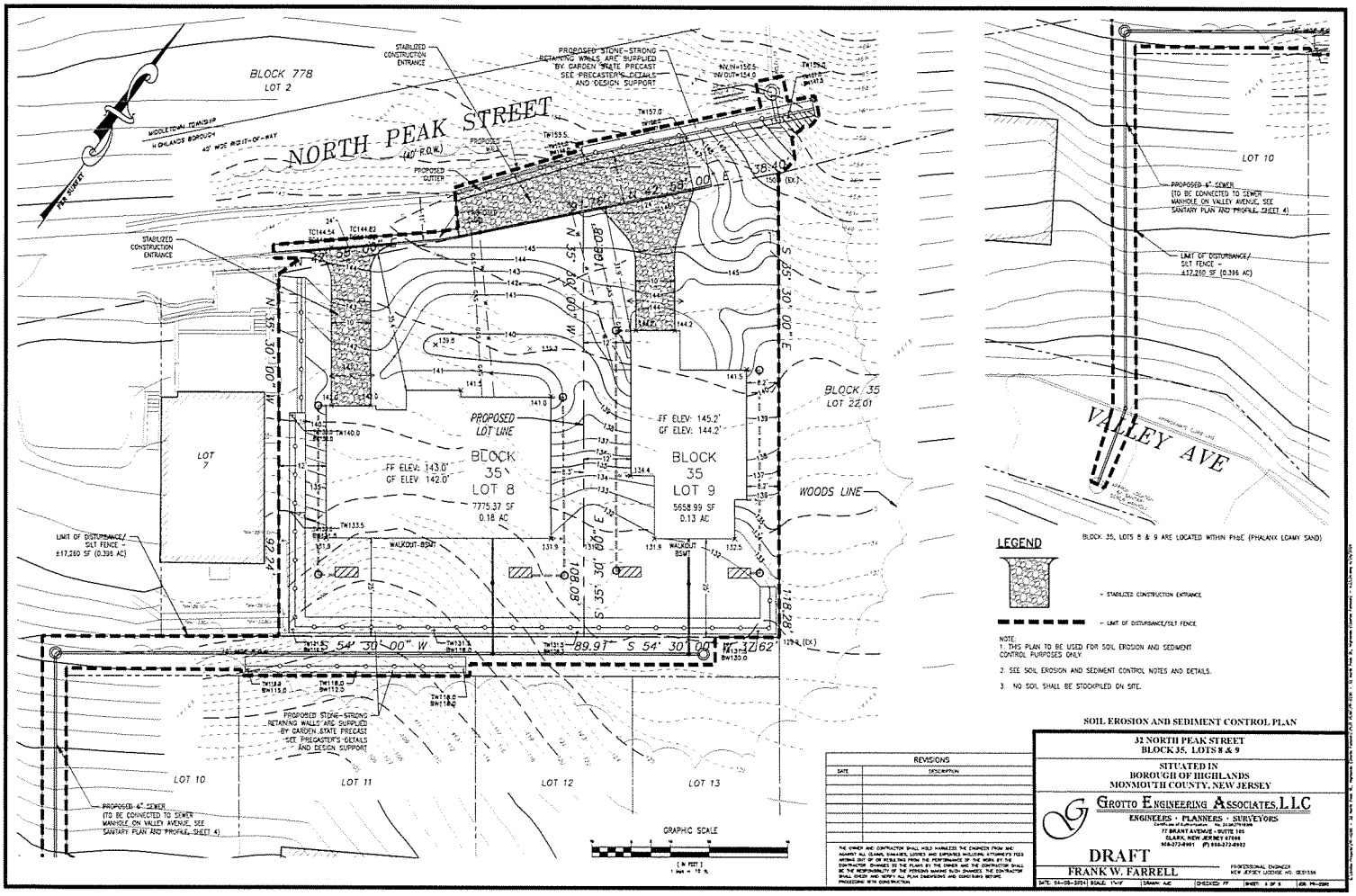
NORTH PEAK STREET
(40' R.O.W.)
BLOCK 778
LOT 2
STABILIZED CONSTRUCTION ENTRANCE
PROPOSED STONE-STRONG RETAINING WALLS ARE SUPPLIED BY GARDEN STATE PRECAST SEE PRECASTER'S DETAILS AND DESIGN SUPPORT
PROPOSED GUTTER
PROPOSED LOT LINE
BLOCK 35
LOT 8
7775.37 SF
0.18 AC
FF ELEV: 143.0'
GF ELEV: 142.0'
BLOCK 35
LOT 9
5658.99 SF
0.13 AC
FF ELEV: 145.2'
GF ELEV: 144.2'
WALKOUT BSMT
LOT 7
LIMIT OF DISTURBANCE/ SILT FENCE - ±17,260 SF (0.396 AC)
BLOCK 35
LOT 22.01
WOODS LINE
LOT 10
LOT 11
LOT 12
LOT 13
PROPOSED 6" SEWER (TO BE CONNECTED TO SEWER MANHOLE ON VALLEY AVENUE, SEE SANITARY PLAN AND PROFILE, SHEET 4)
VALLEY AVE
LEGEND
- STABILIZED CONSTRUCTION ENTRANCE
- LIMIT OF DISTURBANCE/SILT FENCE
NOTE:
1. THIS PLAN TO BE USED FOR SOIL EROSION AND SEDIMENT CONTROL PURPOSES ONLY.
2. SEE SOIL EROSION AND SEDIMENT CONTROL NOTES AND DETAILS.
3. NO SOIL SHALL BE STOCKPILED ON SITE.
SOIL EROSION AND SEDIMENT CONTROL PLAN
32 NORTH PEAK STREET
BLOCK 35, LOTS 8 & 9
SITUATED IN
BOROUGH OF HIGHLANDS
MONMOUTH COUNTY, NEW JERSEY
GROTTO ENGINEERING ASSOCIATES, LLC
ENGINEERS · PLANNERS · SURVEYORS
DRAFT
FRANK W. FARRELL
REVISIONS
GRAPHIC SCALE

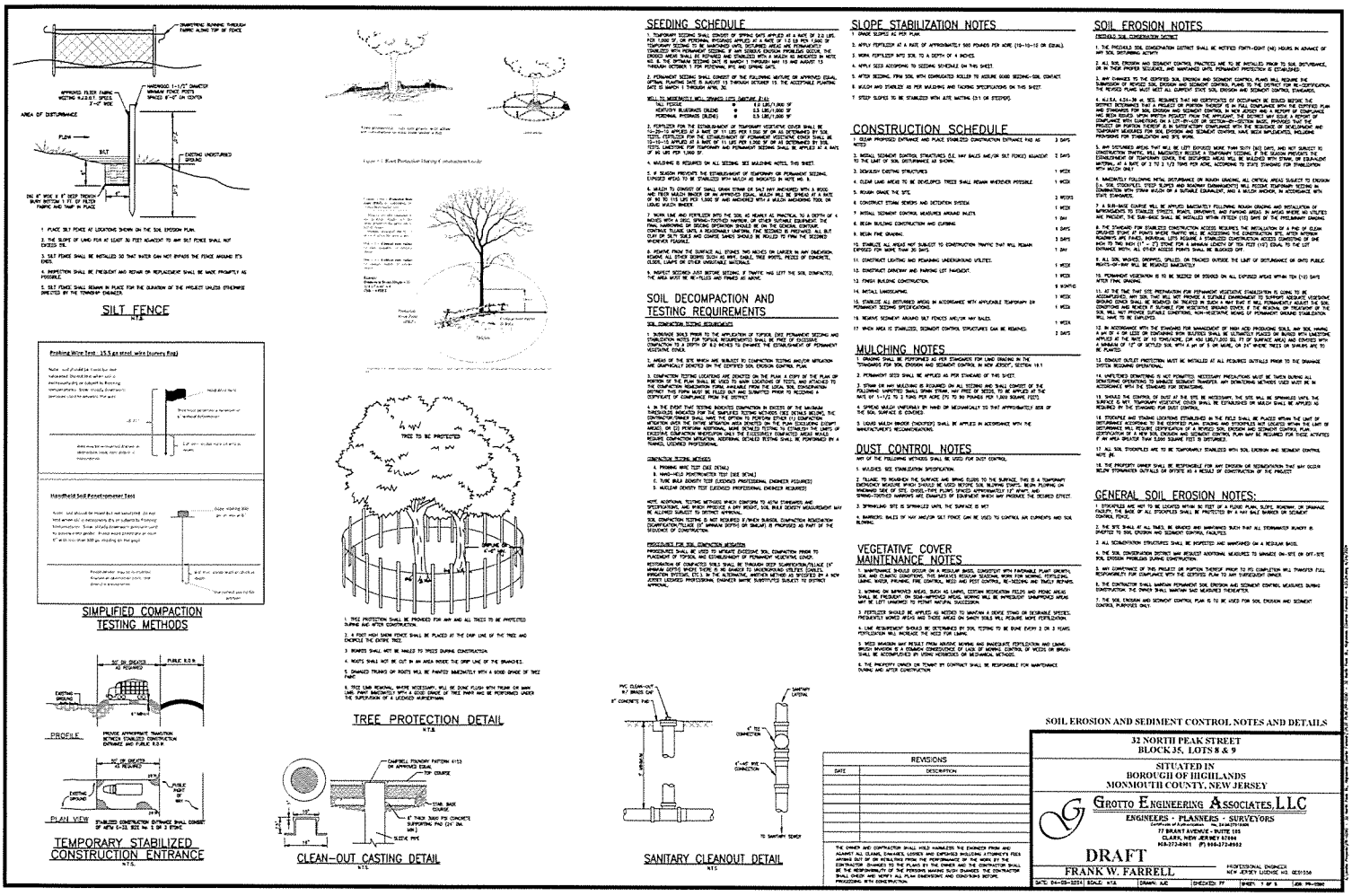
SILT FENCE
N.T.S.
SIMPLIFIED COMPACTION TESTING METHODS
TREE PROTECTION DETAIL
N.T.S.
TEMPORARY STABILIZED CONSTRUCTION ENTRANCE
N.T.S.
CLEAN-OUT CASTING DETAIL
N.T.S.
SANITARY CLEANOUT DETAIL
N.T.S.
SEEDING SCHEDULE
SLOPE STABILIZATION NOTES
CONSTRUCTION SCHEDULE
SOIL DECOMPACTION AND TESTING REQUIREMENTS
MULCHING NOTES
DUST CONTROL NOTES
VEGETATIVE COVER MAINTENANCE NOTES
SOIL EROSION NOTES
GENERAL SOIL EROSION NOTES:
SOIL EROSION AND SEDIMENT CONTROL NOTES AND DETAILS
32 NORTH PEAK STREET
BLOCK 35, LOTS 8 & 9
SITUATED IN
BOROUGH OF HIGHLANDS
MONMOUTH COUNTY, NEW JERSEY
GROTTO ENGINEERING ASSOCIATES, LLC
ENGINEERS • PLANNERS • SURVEYORS
77 BRANT AVENUE • SUITE 105
CLARK, NEW JERSEY 07066
908-272-8401 (F) 908-272-8922
DRAFT
FRANK W. FARRELL
PROFESSIONAL ENGINEER
NEW JERSEY LICENSE NO. GE51556
REVISIONS
DATE
DESCRIPTION

Roberts
ENGINEERING GROUP LLC
Women Business Enterprise Certified

1670 Whitehorse-Hamilton Square Rd.
Hamilton, New Jersey 08690
609-586-1141 fax 609-586-1143
www.RobertsEngineeringGroup.com

September 10, 2024

Nancy Tran
Land Use Board Secretary
Borough of Highlands Land Use Board
151 Navesink Avenue
Highlands, New Jersey 07732

Re: Completeness Review No. 5
Home & Land Development Corp.
14 & 32 North Peak Street
Block 35, Lots 8 & 9
Minor Subdivision and Variances
Borough of Highlands, Monmouth County, New Jersey
Our File No.: HLPB2022-10

Dear Ms. Tran:

As requested, we have reviewed the above referenced application in accordance with the Borough of Highlands Zoning and Land Use Regulations. section entitled, "Part 3, Subdivision and Site Plan Review, Article VI, Application Procedure", and "Article VIII, Plat and Plan Details, section 21-58.A – Minor Subdivision Plat".

Below is our Completeness Review along with comments for the above referenced project. This review was prepared based upon the following documents:

1. Architectural Plan for 14 North Peak Street prepared by Grasso Design Group dated 8/27/24.
2. Architectural Plan for 32 North Peak Street prepared by Grasso Design Group dated 8/27/24.
3. Drainage Report for 32 North Peak Street prepared by Grotto Engineering Associates dated 8/22/24.
4. Plan set entitled "Plot Plan For 32 North Peak Street, Block 35, Lots 8 & 9, situated in Borough of Highlands, Monmouth County, New Jersey", prepared by Grotto Engineering Associates, LLC., Clark New Jersey, dated April 5, 2024, and last revised August 22, 2024, consisting of 8 sheets.
5. Report entitled, "Report of Review the Stone Strong Systems Modular Retaining Wall System", prepared by ASCE GEO-INSTITUTE, dated January 2021, with various attachments and ancillary reports consisting of 853 sheets.
6. Plan set entitled "Stone Strong System – Gravity Retaining Wall" prepared for Home & Land Development North Peak Street Project" prepared by Garden State Precast, Inc., dated August 29, 2024.
7. Stone Strong Systems product brochure, undated, consisting of 20 sheets.
8. Letter to Home and Land Development from Tulmark, LLC. Geotechnical and Environmental Services dated July 19, 2024, regarding soil bearing capacities.
9. Environmental Impact Statement prepared by Tulmark, LLC. Geotechnical and Environmental Services dated July 17, 2024

It is understood that the application will be heard at the September 12th Planning Board meeting.

The Applicant has addressed some of the comments within the Fourth Completeness Review dated May 8, 2024, pursuant to Ordinance Section 21-58.A as a Minor Subdivision Plat, however, the following comments are offered for the Planning Board's consideration:

As determined in the Fourth Completeness Review, this application is deemed a Major Subdivision and Major Site Plan. As the applicant is now proposing septic systems in lieu of public sewerage to serve the proposed lots, a NJDEP Treatment Works Approval (TWA) for sewer extension is no longer required.

According to the *Municipal Land Use Law, Chapter 291, a* Minor Subdivision is defined under Section 40:55D-5 as:

"Minor subdivision" means a subdivision of land for the creation of a number of lots specifically permitted by ordinance as a minor subdivision; provided that such subdivision does not involve (1) a planned development, (2) any new street or (3) the extension of any off-tract improvement. Therefore, this is classified as a Major Subdivision due to the installation of the retainaing wall in the right of way.

The revised application package submitted does not address the above comment regarding classification as a Major Subdivision and Major Site Plan. The applicant should re-submit the plans and applications with the appropriate fees as detailed in the Fourth Completeness Review. The revised submission should address the appropriate submission requirements for Major Subdivision and Major Site Plan per Section 21-58 of the Borough's land use ordinance.

The Applicant's Engineer resubmitted a plan set entitled "Plot Plan" as detailed above. A major subdivision plan has not been submitted for this project.

Additional comments are provided below:

I. ZONING

1. This property is located in the R-1.01 Residential District.

2. The Applicant requires six (6) variances based on the resubmission of the Plot Plan set.

3. The following revised bulk requirement summary is provided for the Board's reference:

R-1.01 Residential Zone	Required	Existing Lots 8 & 9 (Provided by Applicant)	Existing Lot 8 (Ref: Santry Minor Subdivision)	Existing Lot 9 (Ref: Santry Minor Subdivision)	Proposed Lot 8	Proposed Lot 9
Min. Lot Area (sf)	5,000	13,423	Not provided	Not provided	7,775.37	5,658.99
Lot Frontage/Width (ft)	50	130.26/127.62	91.76	38.40	79.23	50.93 (51.03)
Min. Lot Depth (ft)	100	105.26	(101.42)	(114.44)	108.08 (100.16)	118.28 (113.18)
Min. Front Yard Setback (ft)	35	60.6	-	-	35.3	*31.9
Min. Side Yard Setback (ft)	8/12	**4.7/92.2	-	-	8.3/12	8.2/12
Min. Rear Yard Setback (ft)	25	**8.6	-	-	25	25
Max. Building Height (ft)	30	-	-	-	<30	<30

Max Lot Coverage	70%	±41.9%	-	-	39.0%	34.2%
Max Building Coverage	30%	±8.0%	-	-	26.1%	22.5%
***Max Lot Coverage	33.4% (8) 45.8% (9)	**41.9%	-	-	*39.0%	34.2%
***Max Impervious Surface Area	15.8% (8) 21.2% (9)	**41.9%	-	-	*39.0%	*34.2%
***Max Lot Disturbance (sf)	1,597 (8) 1,560 (9)		-	-	*7,775	*5,649
On-Site Parking (spaces)	2.0 (8) 2.5 (9)	Not provided	-	-	2	2

* VARIANCE REQUIRED
** EXISTING NON-CONFORMING CONDITION
*** PER STEEP SLOPES ORDINANCE AND CALCULATIONS § 21-84-B

Note: Items in the Table above shown in ( ) reflect REG calculations and are to be confirmed by the Applicant.

II. APPLICATION FEES (PART 6 FEE SCHEDULE ARTICLE XXIII, ORD. 21-107)

1. Variances

Residential "c" (minimum front yard setback) x 1	1 EA	$ 125.00	$ 125.00
Steep slope maximum lot coverage x 1	1 EA	$ 125.00	$ 125.00
Steep slope maximum impervious coverage x 2	1 EA	$ 125.00	$ 250.00
Steep slope maximum lot disturbance x 2	1 EA	$ 125.00	$ 250.00
Subtotal			$ 750.00

2. Subdivisions

Major		
Preliminary Plat	$500 plus $50 per lot x2	$ 600.00
Final approval	50% preliminary fee	$ 300.00
Subtotal		$ 900.00

3. Site Plans

Major	(approx. 6,220 sf total building floor area)	
Preliminary approval	$1000 plus $50 per acre or Part thereof and $20 per 1,000 Square foot of building floor area or part thereof or $20 per dwelling unit	$ 1,190.00
Final approval	50% preliminary fee	$ 595.00
Subtotal		$ 1,785.00
Total		$ 3,435.00

III. CHECKLIST ITEMS

1. All existing structures, wooded areas, and topographical features, such as slump blocks, within the portion to be subdivided and within seventy-five (75) feet thereof.

   Partially satisfied. Features are not shown to seventy-five (75) feet.

2. Metes and bounds descriptions of all new lot and property lines.

   The Applicant has provided metes and bounds for all proposed lot lines on the plan, but written descriptions remain outstanding.

3. The existence and location of any utility or other easement.

   The Applicant has updated the plans to indicate utility poles (for electric) on the northerly side of North Peak Street, gas and water lines on North Peak Street and an additional water meter on Lot 9.

   These features are not shown on the Plot Plan.

4. A wetlands statement provided by a qualified expert.

   Provide a statement by a licensed engineer or other authority indicating that wetlands are or are not present on the property.

   This item remains outstanding.

   The Applicant has stated, "This office has reviewed available state mapping, which does not depict wetlands being present on this site."

   A review of the NJDEP GeoWeb does not definitively establish that there are no wetlands present on a property. Field observations are necessary to determine the presence or absence of wetland.

   A signed letter by a qualified expert is required.

   A letter stating, "We have reviewed the State's GeoWeb mapping and performed a site review to confirm that there are no regulated freshwater wetlands or buffers impacting the property," would suffice in completing this checklist item.

5. The Board reserves the right to require a feasible sketch plan layout of remaining land not being subdivided if it is deemed necessary.

   The applicant has provided two house layouts that demonstrate the sizes of the proposed homes and the need for setback relief.

   The proposed lots have many engineering issues that remain to be addressed by a licensed civil engineer. A licensed engineer is required to certify that the developed sites are designed and will be constructed under the appropriate standard of engineering practices and the safety of the homeowner and adjoining properties.

   A Plot Plan set has been provided by the Applicant's engineer. However, a formal Major Site Plan application is required.

6. A lot grading plan, to be reviewed by the Borough Engineer, if required.
   As a condition of approval, the Applicant must provide plot plans for review and approval at the time of obtaining building permits.

   A grading plan is included with the Plot Plan set. A Major Site plan with additional checklist items is required as discussed above.

IV. COMPLETENESS

The application has been scheduled for the September 12th Planning Board meeting.

V. GENERAL COMMENTS

1. Please explain how all the zone requirements were calculated for "Existing Lots 8 & 9" as shown on the Cover sheet of the plan set and also shown in the bulk requirements summary.

   There are some discrepancies in the zoning chart as noted above.

2. The Applicant provided a Plot Plan however they must provide a Major Site Plan. Based on comments above, the Applicant must provide a Major Site Plan submission.

   A Major Site plan with additional checklist items is required as discussed above.

3. Confirm that all reference maps for topographic information are consistent and use the same datum.

   To be confirmed.

4. The General notes reference to the "City Engineer". Please revise.

   To be revised.

5. The plans show adjustments to the existing gutter and roadway within North Peak Street, including installation of a retaining wall and storm drainage improvements within the existing cartway area.

   a. The Borough Council recently approved the construction of a retaining wall within North Peak Street right-of-way, The applicant is to provide testimony as to ownership and maintenance of the retaining wall.

   b. The proposed retaining wall is provided so that access to Lot 9 is possible. The retaining wall ranges from 6.0 feet high to 15.0 feet high and is used to extend North Peak Street so that Lot 9 can access the proposed driveway.

      It is our understanding that the Borough Council has indicated that the proposed construction of the retaining wall and pavement extension is acceptable. We note that the roadway improvements proposed within the Borough R.O.W. do not meet municipal or Residential Site Improvement Standards (RSIS) for road width. A waiver is required.

      It is further our understanding that the Borough Council found the installation of sanitary sewer in the 10-foot and 6 -foot rights-of-way unacceptable.

   c. An existing inlet with 12" and 15" pipes was previously shown on the Minor Subdivision dated May 1, 2023, with the inlet noted to be removed. The proposed plans appear to have removed the 15-inch pipe and installed the proposed 15 ft high retaining wall over that area. The 12-inch pipe remaining is shown to be extended through the retaining wall. Explain how this will work and so as not to disrupt the drainage in the area.

      Not addressed. Drainage calculations have been submitted, but they do not include calculation of discharge from this existing pipe, nor drainage from the upstream drainage area. From the information submitted, we are not able to determine if this modification of the existing piped drainage system will change drainage patterns to the site and beyond. Additional stormwater measures may be required.

   d. A proposed manhole and the 12-inch pipe are shown north of the proposed retaining wall and daylight at the wall. It appears this pipe begins in Middletown Township and discharges in Highlands. The applicant is proposing to extend the pipe through the retaining wall on North Peak Street but there is no information on where the water originates and how much will be discharged through the retaining wall and onto Lots 8 and 9.

      See c. above.

e. There is a wall-like feature at the end of the paved portion of North Peak Street. This must be shown on the plans and included in the proposed roadway and drainage improvements.

Feature not shown or addressed on Plot Plan.

f. The proposed retaining wall elevations are not consistent with the existing grades and more information is needed. All retaining walls are large and insufficient information is provided to evaluate these.

Items 5, 6 & 7 in the document list above present additional data for the retaining walls. These walls are very large and will result in major changes to the topography and drainage patterns on these lots.

g. Proposed grading is not shown on the north side of the proposed retaining wall on North Peak Street.

Top of wall elevations have been adjusted to match existing grades behind the wall, but no top of wall elevation is shown for the southwesterly end of the wall.

h. Off-street parking is determined by the number of bedrooms. Please provide.

The architectural plans provided indicate that Lot 8 will have a 3-bedroom dwelling and Lot 9 will have a 4-bedroom dwelling. We note, however, that the dwelling proposed on Lot 8 has a "loft" with convenient access to both a closet and a bathroom and should be considered an additional bedroom. The Residential Site Improvement Standards call for 2½ parking spaces per 4-bedroom dwelling unit but indicate that this requirement can be rounded down to 2.

6. The applicant previously demolished structures on both lots and performed clearing and some grading. The limit of grading/disturbance for the proposed improvements appears to comprise the entire property limits, including some off-tract elements.

The Applicant states, "The limit of disturbance was no greater than is being proposed and shown on the Soil Erosion and Sediment Control Plan. Proposed disturbance to adjoining property owners has been eliminated. Disturbance shall only occur on Lots 8 & 9 and within the Borough's right-of-way."

It appears the proposed limit of disturbance is no greater than the actual clearing line of what was previously removed. The sanitary sewer extension previously proposed has been removed from the plans in favor of proposed individual on-lot septic systems, eliminating disturbance within the 10-foot wide Borough R.O.W., except as may be required for construction of the adjacent retaining wall.

It is noted that the amount of disturbance proposed for each of these lots, although already disturbed, is significantly greater than permitted under the steep slope provisions of the ordinance. Referring to the chart on Page 3 above, allowable disturbances for Lots 8 & 9 are 1,597 sf and 1,560 sf, respectively, where 7,775 sf and 5,649 sf are proposed.

7. The prior dwelling utilized a septic system. The location and disposition of this should be shown on the plans. The septic tank is shown on the Minor Subdivision Plan prepared by Thomas P. Santry, PLS. The Applicant must provide documentation from the Health Department that the system has been or will be properly removed.

This item has not been addressed by the applicant.

8. An Existing Conditions Plan is requested to provide clarity for the site. Existing features are missing on the plans and the proposed plans are complex and difficult to differentiate the proposed and existing features.

This plan has not been provided.

9. ***The applicant has removed the sanitary sewer extension from the plans and is now proposing individual on-lot sewage disposal systems. However, the proposed septic systems shown on the plans are schematic only and are severely undersized. Given the density of the proposed development and the steepness of the lots both before and after construction, we doubt that there is sufficient area on these lots for properly sized septic systems. It appears that there would be room for only one dwelling if a septic system is to be constructed. The applicant should show properly sized septic systems on the plans, or propose some other means of providing sewer service to these lots. The applicant may want to consider privately owned pumping systems for each lot with a connection to the nearest sanitary manhole in an adjacent roadway. We also note that it is our opinion that the septic system for Lot 8 should be designed for a 4-bedroom rather than 3-bedroom house, as noted above.*** .

10. Although the public sewer has been removed from the plans, the applicant is proposing roadway improvements and a retaining wall within the North Peak Street public right-of-way. Resolution of the sewerage requirements may require additional public improvements.

    a. The proposed sanitary sewer line is recommended to be an 8-inch diameter pipe, as we do not recommend that two dwellings share a 6-inch sewer line.

    b. Existing and proposed (fill) grading, although shown on the profile is not completely shown on the plan view. The plan also lacks grading between Lot 7 and the proposed retaining wall. Additionally, the retaining wall for Lot 7 appers to be on lot 8.

11. Cross sections C-C and D-D on Plan Sheet 6 of 8, Cut/Fill Cross Sections and Calculations should include both retaining walls (rear yard and North Peak Street). All cross sections are to show property lines so that a clear evaluation may be made of the impact of the walls.

12. The rear retaining wall is set at elevation 131.5 and supports the new houses which have first floor elevations of 143 and 145.2.

13. The Applicant has indicated the existing and proposed water, gas, and electric service connections for Lots 8 & 9.

    a. The proposed water and gas services for Lot 9 cross Lot 8. The water and gas services will need to be relocated or an easement placed on Lot 8.

    b. The water service is proposed at 2 inches and is oversized for a single-family home. Why is the service line greater than 1 inch?

    c. The electric service needs to be shown on the plans.

14. The Applicant is requested to document compliance with the Steep Slope Ordinance found at 21-84.B and provide calculations as required therein. In addition, means and methods for controlling velocity and rate of stormwater runoff shall be documented.

    The Applicant has prepared a Steep Slope and Slump Block Permit Application report pursuant to Ordinance § 21-84.B.

    a. The report indicates that Lot 8 will require variances for the maximum lot coverage, maximum impervious surface area and maximum lot disturbance according to the steep slope requirements. Lot 9 will require variances for the maximum impervious surface area and maximum lot disturbance according to the steep slope requirements.

       As noted above, the lot disturbances proposed by the applicant substantially exceed the "Maximum Lot Disturbance" allowance under the steep slope provisions of the ordinance. Proposed disturbance for Lot 8 is 7,775 sf where 1,597 sf is permitted, and proposed disturbance for Lot 9 is 5,649 sf where 1,560 sf is permitted. These disturbed areas are 4.87 and 3.62 times the size of allowable disturbances, respectively.

    b. The report refers to the 10-foot right-of-way as an easement. Please clarify or correct.

c. Please indicate the project site on the Soil Map.

d. The method for controlling velocity and rate of stormwater runoff is described by the Applicant's Engineer's statement:

"Stormtech (SC-740) Chamber Systems will be installed in the rear yards of each property. The chambers will temporarily store roof runoff during a storm event to control the stormwater runoff. The bottom of the chambers are open and are installed on clean stone which allows the stored water to percolate into the ground, Roof leaders will be hard piped directly to the chambers. Details, size, and specifications may be provided upon request.

While we support the applicant's efforts to reduce runoff from this site, the drainage design fails to account for runoff emanating from the drainage areas upstream of the proposed lots. This includes runoff flowing from the 12-inch CMP pipe near the northerly corner of proposed Lot 9 which will now discharge directly into the site. The plans are unclear as to where this runoff is being discharged at present.

e. The stormtech chambers will infiltrate water into the ground in an area of fill which is adjacent to the retaining wall that is 10 to 13 feet high. It is possible that the water infiltrated into the ground will cause hydrostatic forces on the adjacent retaining wall and may even follow the soil line between in situ soils and the fill soil needed to raise the rear yards 10+ feet. It is recommended that soil testing be conducted to verify that the water will not travel along the old ground surface (under the fill) and undermine the retaining walls.

Although the applicant has submitted a soils report based upon 8 soil borings on the site and particularly located at the retaining walls, there has been no testing of soil permeability needed to properly evaluate infiltration and hydrostatic forces. There is concern that stormwater may drain along the soil boundary between the proposed fill and the existing ground and accumulate behind the retaining wall along the southerly side of the site creating hydrostatic pressure on the wall A detailed geotechnical report is required.

f. No storm analysis was provided for the stormtech chambers. There is no stormwater analysis or storm event size provided for the site. It is unknown what storm event can be handled by the chambers and what the extent of overflow will be. Any overflow will be toward the retaining wall at the rear.

The submitted drainage report provides stormwater routings for the Stormtech Chambers for the 2-, 10- and 100-year storms. However, as noted above, there has been no permeability testing to verify the infiltration rates used in the calculations, and the report fails to consider the effects of drainage from the upstream drainage area and modified 12" CMP storm drain.

g. The applicant must provide soil testing and a geotechnical analysis and design of the retaining walls and the stormtech chambers and determine how all these improvements impact each other and the surrounding area.

A soil bearing capacity report for the retaining walls has been submitted. No additional geotechnical information has been submitted to date and there has been no analysis as to how the various improvements will impact each other and the surrounding area.

h. There is an elevation change of 50 feet between the first-floor elevation of Lot 8 and the bottom of the sanitary lateral in the right of way. The slopes and elevations and proposed conditions on this site are of concern and the applicant must provide specialized engineering and analysis to assure proper stability.

No additional stability analysis or geotechnical data has been provided.

i. The grading at the front of the lots is toward the houses. Of particular concern is the existing pipe discharging from Middletown Township and through the proposed 10 ft. high retaining

wall in the North Peak Street right-of-way. The water from the pipe flows toward the houses and the proposed grading is also toward the houses. It then is diverted to a swale between the two houses and flows toward and over the 13.5 ft high retaining wall at the rear of the site.

The applicant is proposing low points approximately eight (8) feet in front of the garage for each house. Runoff from these low points will flow off the driveway on each side to the adjacent lawn areas and adjacent properties. Each of these low points is less than four (4) inches below the proposed garage floor elevation. The applicant should provide a drainage analysis of these areas to insure that stormwater will not pool in these low points to depths greater than the four (4) inch depths proposed.

j. In regard to the retaining walls, we note that walls provided by Garden State Precast are proposed. Generally, these walls are masses of weight which use a wide base to provide the needed stability. Therefore, these walls are very wide and will use a lot of area underground.

k. The above concerns, although directed at the two proposed lots, are also of concern to the surrounding lots. The applicant must analyze the impact of uncontrolled surface runoff from this site on to all surrounding and downstream properties.

No additional data or analysis has been provided.

15. The Applicant is seeking a waiver for an Environmental Impact Report as required in §21-84B Steep Slope and Slump Block. We do not recommend a waiver based on our many concerns commented upon above.

    An Environmental Impact Statement has been submitted but is generic in nature and fails to address the significant environmental sensitivity of the property, particularly with respect to the steep slopes and massive retaining walls. The report is unaware that the site has had nearly all trees removed and requires retaining walls. It is recommended that a more detailed study and report be prepared to deal with these site specific environmental issues.

16. We also note that the proposed retaining wall is very close to the existing retaining walls for Lot 7. The proposed height of the retaining wall in the south corner of Lot 8 is 7.7 ft higher than that of the existing retaining wall on Lot 7.

    More information is required to determine the impact the new retaining walls will have on the existing dwellings and walls.

    No additional data or analysis has been provided.

17. Should this application be approved, a performance guarantee will be required for all improvements in the right of way. Additionally, detailed engineering designs are required, and fully designed and detailed plot plans are required prior to issuance of any building permits.

18. Additional construction details are required. Construction details should be placed together for easier reference.

19. It is understood that the site was cleared. Tree permits were approved in September 2021. Tree replacement may be required according to § 22.1.8 Tree Replacement Requirements, Ordinance 0-24-04

20. Approval of this application will be conditioned upon the Applicant obtaining approved documents from the Freehold Soil Conservation District.

VI. CONCLUSION

The Applicant requires a Major Subdivision Plan, and Major Site Plan and revised plans and reports must be submitted.

Should you have any questions, please do not hesitate to contact me.

Very truly yours,

Carmela Roberts, P.E., C.M.E., C.P.W.M.
Land Use Board Engineer

cc: Michael Muscillo, Borough Administrator, (mmuscillo@highlandsborough.org)
Austin Mueller, Esq., Land Use Board Attorney (amueller@weiner.law)
Courtney Lopez, Zoning Officer (clopez@highlandsborough.org)
Charles Farkouh, Applicant (GNF718@aol.com)
Frank W. Farrell, P.E., C.M.E., Applicant's Engineer
Michael A. Bruno, Esq., Applicant's Attorney (mbruno@ghclaw.com)
Cameron Corini, P.E., C.M.E., C.P.W.M., Roberts Engineering Group, LLC
GS Bachman, E.I.T., Roberts Engineering Group, LLC