CITY of ESCONDIDO

COUNCIL MEETING AGENDA

WEDNESDAY, AUGUST 20, 2025

3:30 PM - Closed Session (Parkview Conference Room)
5:00 PM - Regular Session
Escondido City Council Chambers, 201 North Broadway, Escondido, CA 92025

WELCOME TO YOUR CITY COUNCIL MEETING

We welcome your interest and involvement in the legislative process of Escondido. This agenda includes information about topics coming before the City Council and the action recommended by City staff.

MAYOR
Dane White

DEPUTY MAYOR
Consuelo Martinez (District 1)

COUNCILMEMBERS
Joe Garcia (District 2)
Christian Garcia (District 3)
Judy Fitzgerald (District 4)

CITY MANAGER
Sean McGlynn

CITY ATTORNEY
Michael McGuinness

CITY CLERK
Zack Beck

HOW TO WATCH

The City of Escondido provides three ways to watch a City Council meeting:

In Person

201 N. Broadway

On TV

Cox Cable Channel 19 and U-verse Channel 99

Online

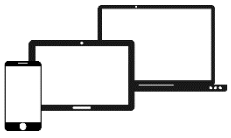

www.escondido.gov

HOW TO PARTICIPATE

The City of Escondido provides two ways to communicate with the City Council during a meeting:

In Person

Fill out Speaker Slip and Submit to City Clerk

In Writing

escondido-ca.municodemeetings.com

ASSISTANCE PROVIDED

If you need special assistance to participate in this meeting, please contact our ADA Coordinator at 760-839-4869. Notification 48 hours prior to the meeting will enable to city to make reasonable arrangements to ensure accessibility. Listening devices are available for the hearing impaired – please see the City Clerk.

CLOSED SESSION
3:30 PM

CALL TO ORDER

1. Roll Call: Fitzgerald, C. Garcia, J. Garcia, Martinez, White

ORAL COMMUNICATIONS

In addition to speaking during particular agenda items, the public may address the Council on any item which is not on the agenda provided the item is within the subject matter jurisdiction of the City Council. State law prohibits the Council from discussing or taking action on such items, but the matter may be referred to the City Manager/staff or scheduled on a subsequent agenda. Speakers are limited to only one opportunity to address the Council under Oral Communications.

CLOSED SESSION

I. CONFERENCE WITH LEGAL COUNSEL – ANTICIPATED LITIGATION (Government Code § 54956.9(d)(2))
One Matter

II. CONFERENCE WITH LABOR NEGOTIATORS (Government Code § 54957.6)

a. Agency Representative: Sean McGlynn, City Manager, or designee
Employee Organization: Teamsters Local 986, Maintenance and Operations Bargaining Unit and Administrative / Clerical / Engineering Bargaining Unit
b. Agency Representative: Sean McGlynn, City Manager, or designee
Employee Organization: Escondido City Employees' Association, Supervisory Bargaining Unit
c. Agency Representatives: Sean McGlynn, City Manager, or designee
Employee Organization: Escondido Police Association Non-Sworn Bargaining Unit
d. Agency Representative: Sean McGlynn, City Manager, or designee
Employee Organization: Police Officers' Association Sworn Personnel Bargaining Unit
e. Agency Representative: Sean McGlynn, City Manager, or designee
Employee Organization: Firefighters Association Safety and Non-Safety Bargaining Unit
f. Agency Representative: Sean McGlynn, City Manager, or designee
Employee Organization: Employee Organization: Police Management Association Bargaining Unit

III. CONFERENCE WITH LEGAL COUNSEL – ANTICIPATED LITIGATION (Government Code § 54956.9(d)(2))

a. *Flatiron Dragados West, LLC v. City of Escondido*

ADJOURNMENT

REGULAR SESSION
5:00 PM Regular Session

MOMENT OF REFLECTION

City Council agendas allow an opportunity for a moment of silence and reflection at the beginning of the evening meeting. The City does not participate in the selection of speakers for this portion of the agenda, and does not endorse or sanction any remarks made by individuals during this time. If you wish to be recognized during this portion of the agenda, please notify the City Clerk in advance.

FLAG SALUTE

The City Council conducts the Pledge of Allegiance at the beginning of every City Council meeting.

CALL TO ORDER

Roll Call: Fitzgerald, C. Garcia, J. Garcia, Martinez, White

PRESENTATIONS

Interfaith CUP Informational Update

San Diego County Water Authority Board Member Rick Paul

CLOSED SESSION REPORT

ORAL COMMUNICATIONS

In addition to speaking during particular agenda items, the public may address the Council on any item which is not on the agenda provided the item is within the subject matter jurisdiction of the City Council. State law prohibits the Council from discussing or taking action on such items, but the matter may be referred to the City Manager/staff or scheduled on a subsequent agenda. Speakers are limited to only one opportunity to address the Council under Oral Communications.

CONSENT CALENDAR

Items on the Consent Calendar are not discussed individually and are approved in a single motion. However, Council members always have the option to have an item considered separately, either on their own request or at the request of staff or a member of the public.

1. **AFFIDAVITS OF PUBLICATION, MAILING, AND POSTING (COUNCIL/RRB)**

2. **APPROVAL OF WARRANT REGISTER**
   Request the City Council approve the City Council and Housing Successor Agency warrants issued between August 04, 2025 to August 10, 2025.

   Staff Recommendation: Approval (Finance Department: Christina Holmes, Director of Finance)

3. **APPROVAL OF MINUTES: None**

4. **WAIVER OF READING OF ORDINANCES AND RESOLUTIONS**

PUBLIC HEARING

5. **IMPLEMENTATION AND FINANCING OF THE CITYWIDE ENERGY ROADMAP**
   Request the City Council adopt Resolution No. 2025-107 authorizing the Mayor and/or Authorized Officers to execute, on behalf of the City: (1) the First Amendment to the Energy Services Agreement between the City and Climatec Energy Services ("Climatec"); (2) an Equipment Lease/Purchase Agreement with an initial principal value of $46,000,000 through Banc of America Public Capital Corp "(BAPCC"); (3) an Escrow and Account Control Agreement; and (4) such other agreements and documents as may be required to complete transactions to implement the Energy Roadmap.

   Staff Recommendation: Approval (City Manager Department: Sean McGlynn, City Manager)

   Presenters: Christopher McKinney, Deputy City Manager; Christina Holmes, Finance Director; Ashley Lough, Climatec; and Tyler Girtman, Climatec

   a) Resolution No. 2025-107

CURRENT BUSINESS

6. **PUBLIC ART WORK PLAN: FISCAL YEAR 2024/2025 UPDATES AND FISCAL YEAR 2025/2026 PUBLIC ART COMMISSION ANNUAL WORK PLAN**
   Request the City Council adopt Resolution No. 2025-110 approving and adopting the Fiscal Year 2025/2026 Public Art Commission Annual Work Plan.

   Staff Recommendation: Approval (Economic Development Department: Jennifer Schoeneck, Director of Economic Development)

   Presenter: Sandra Aguilar, Management Analyst

   a) Resolution No. 2025-110

FUTURE AGENDA

7. **FUTURE AGENDA**
   The purpose of this item is to identify issues presently known to staff or which members of the City Council wish to place on an upcoming City Council agenda. Council comment on these future agenda items is limited by California Government Code Section 54954.2 to clarifying questions, brief announcements, or requests for factual information in connection with an item when it is discussed.

   Staff Recommendation: None (City Clerk's Office: Zack Beck)

COUNCILMEMBERS SUBCOMMITTEE REPORTS AND OTHER REPORTS

CITY MANAGER'S REPORT

The most current information from the City Manager regarding Economic Development, Capital Improvement Projects, Public Safety, and Community Development.

ORAL COMMUNICATIONS

In addition to speaking during particular agenda items, the public may address the Council on any item which is not on the agenda provided the item is within the subject matter jurisdiction of the City Council. State law prohibits the Council from discussing or taking action on such items, but the matter may be referred to the City Manager/staff or scheduled on a subsequent agenda. Speakers are limited to only one opportunity to address the Council under Oral Communications.

ADJOURNMENT

UPCOMING MEETING SCHEDULE

Wednesday, August 27, 2025	4:00 & 5:00 PM	Closed Session, Regular Meeting, *Council Chambers*
Wednesday, September 10, 2025	4:00 & 5:00 PM	Closed Session, Regular Meeting, *Council Chambers*

SUCCESSOR AGENCY

Members of the Escondido City Council also sit as the Successor Agency to the Community Development Commission, Escondido Joint Powers Financing Authority, and the Mobilehome Rent Review Board.

Consent Item No. 1 **August 20, 2025**

A F F I D A V I T S

OF

I T E M

P O S T I N G –

- **Resolution of the City Council of the City of Escondido Approving Climatec Agreements, and Associated Equipment Lease/Purchase Agreements and Escrow and Account Control Agreements, Making Certain Findings Required Therefore, and Authorizing Certain Related Actions in Connection Therewith**

Docusign Envelope ID: 74624B83-AA6E-4AFD-807F-860145DC9DB7

CITY OF ESCONDIDO
OFFICE OF THE CITY CLERK
201 NORTH BROADWAY
ESCONDIDO, CA 92025-2798
(760) 839-4617

NOTICE OF PUBLIC HEARING

NOTICE IS HEREBY GIVEN pursuant to Government Code Section 4217.12 and Section 4217.13, on WEDNESDAY, AUGUST 20, 2025 at 5 p.m., the Escondido City Council of the City of Escondido will hold a Public Hearing to consider the following:

Resolution of the City Council of the City of Escondido Approving Climatec Agreements, and Associated Equipment Lease/Purchase Agreements and Escrow and Account Control Agreements, Making Certain Findings Required Therefore, and Authorizing Certain Related Actions in Connection Therewith

The City Council shall hold a public hearing presenting certain findings, taking public comment, and approving a Resolution adopting the findings and approving an amendment to an Energy Services Agreement (as amended, the "Energy Services Agreement") and related Measurement and Verification Agreement, both with Climatec, LLC ("M&V Agreement" and, together with the Energy Services Agreement, the "Climatec Agreements"), in order to implement a Citywide Energy Roadmap Program, one or more Equipment Lease/Purchase Agreements with Banc of America Public Capital Corp ("BAPCC") and/or an affiliate of BAPCC, and one or more related Escrow and Account Control Agreements, to finance certain energy conservation improvements to City facilities, all in accordance with California Government Code Section 4217.10 to 4217.18. The City Council findings shall demonstrate the cost of the Citywide Energy Roadmap Program implemented under the Climatec Agreements will be less than the anticipated marginal cost of thermal, electrical, or other energy that would have been consumed in the absence of those purchases and will also demonstrate that the funds for the repayment of the lease payments under the Equipment Lease/Purchase Agreement are projected to be available from funding that otherwise would have been used for purchase of electrical, thermal, or other energy required by the City in the absence of the financed improvements and equipment.

IF YOU CHALLENGE this item in court, you may be limited to raising only those issues you or someone else raised at the Public Hearing described in this notice, or in written correspondence delivered to the City Council, at or prior to the Public Hearing.

The City of Escondido recognizes its obligation to provide equal access to public services for those individuals with disabilities. Please contact the American Disabilities Act (A.D.A.) Coordinator (760) 839-4376 with any requests for reasonable accommodations, to include sign language interpreters, at least 24 hours prior to the meeting. The City of Escondido does not discriminate against any person with a handicapped status.

ALL INTERESTED PERSONS are invited to attend said Public Hearing to express their opinion in this matter. Said Public Hearing will be held in the Council Chambers, 201 N. Broadway, Escondido, California, 92025.

PUBLIC COMMENT: To submit comments in writing, please do so at the following link: https://escondido-ca.municodemeetings.com/bc-citycouncil/webform/public-comment.

FOR ADDITIONAL INFORMATION, please contact Christopher McKinney, Deputy City Manager/Interim Director of Development Services (760) 839-4090.

DocuSigned by:
Zack Beck
A58535D0BDC1430...
ZACK BECK, City Clerk
City of Escondido
August 7, 2025

Published in THE ESCONDIDO TIMES ADVOCATE: 8/7/25

STAFF REPORT

August 20, 2025
File Number 0400-40

SUBJECT

APPROVAL OF WARRANT REGISTER

DEPARTMENT

Finance

RECOMMENDATION

Approval for City Council and Housing Successor Agency warrants issued between August 04, 2025 to August 10, 2025

Staff Recommendation: Approval (Finance Department: Christina Holmes)

ESSENTIAL SERVICE – Internal requirement per Municipal Code Section 10

COUNCIL PRIORITY –

FISCAL ANALYSIS

The total amount of the warrants for the following periods are as follows:

Dates	08/04/2025 to 08/10/2025
Total	$3,917,486.46
Number of Warrants	231

BACKGROUND

The Escondido Municipal Code Section 10-49 states that warrants or checks may be issued and paid prior to audit by the City Council, provided the warrants or checks are certified and approved by the Director of Finance as conforming to the current budget. These warrants or checks must then be ratified and approved by the City Council at the next regular Council meeting.

Consent Item No. 3 **August 20, 2025**

A P P R O V A L

O F

M I N U T E S

STAFF REPORT

ITEM NO. 4

SUBJECT

WAIVER OF READING OF ORDINANCES AND RESOLUTIONS –

ANALYSIS

The City Counci/RRB has adopted a policy that is sufficient to read the title of ordinances at the time of introduction and adoption, and that reading of the full text of ordinances and the full text and title of resolutions may be waived.

Approval of this consent calendar item allows the City Council/RRB to waive the reading of the full text and title of all resolutions agendized in the Consent Calendar, as well as the full text of all ordinances agendized in either the Introduction and Adoption of Ordinances or General Items sections. **This particular consent calendar item requires unanimous approval of the City Council/RRB.**

Upon approval of this item as part of the Consent Calendar, all resolutions included in the motion and second to approve the Consent Calendar shall be approved. Those resolutions removed from the Consent Calendar and considered under separate action may also be approved without the reading of the full text and title of the resolutions.

Also, upon the approval of this item, the Mayor will read the titles of all ordinances included in the Introduction and Adoption of Ordinances section. After reading of the ordinance titles, the City Council/RRB may introduce and/or adopt all the ordinances in one motion and second.

RECOMMENDATION

Staff recommends that the City Council/RRB approve the waiving of reading of the text of all ordinances and the text and title of all resolutions included in this agenda. Unanimous approval of the City Council/RRB is required.

Respectfully Submitted,

Zack Beck
City Clerk

STAFF REPORT

August 20, 2025
File Number 0600-10; A-3564; A-3564-1-A; A-3564-1-B

SUBJECT

IMPLEMENTATION AND FINANCING OF THE CITYWIDE ENERGY ROADMAP

DEPARTMENT

City Manager

RECOMMENDATION

Request the City Council adopt Resolution No. 2025-107 authorizing the Mayor and/or Authorized Officers to execute, on behalf of the City: (1) the First Amendment to the Energy Services Agreement between the City and Climatec Energy Services ("Climatec"); (2) an Equipment Lease/Purchase Agreement with an initial principal value of $46,000,000 through Banc of America Public Capital Corp "(BAPCC"); (3) an Escrow and Account Control Agreement; and (4) such other agreements and documents as may be required to complete transactions to implement the Energy Roadmap.

Staff Recommendation: Approval (City Manager: Sean McGlynn, City Manager)

Presenters: Christopher McKinney, Deputy City Manager; Christina Holmes, Finance Director; Ashley Lough, Climatec; and Tyler Girtman, Climatec

ESSENTIAL SERVICE – Yes, Keep City Clean for Public Health and Safety; Land Use/Development; Clean Water; Sewer; Public Works/Infrastructure; Maintenance of Parks facilities/Open Spaces

COUNCIL PRIORITY – Eliminate Structural Deficit; Improve Public Safety; Increase Retention and Attraction of People and Businesses to Escondido; Encourage Housing Development

FISCAL ANALYSIS

The Energy Roadmap will reduce energy and power consumption, resulting in financial savings for the City benefitting the General Fund, the Water Fund, and the Wastewater Fund. The expected lifetime of the improvements is generally 15 to 20 years, with some solar projects having a projected 30-year lifetime.

Total projected lifecycle savings for all projects is $83.6 million including $70.4 million in operating budget savings and $13.2 million in capital budget savings. Savings projections assume that San Diego Gas and Electric ("SDG&E") electricity rates will escalate 5 percent annually over the project lifetime.

The total implementation cost of all projects is approximately $55.9 million. Projects benefitting the General Fund account for $37.7 million of this total, Water Fund projects for $5.1 million, and Wastewater Fund project account for the remaining $13.1 million. Detailed information related to the scope of work

can be found in Attachment "A"/Exhibit 1 of the First Amendment to Energy Services Agreement (Attachment "1").

The City will fund program implementation with existing City funds on hand ($10 million) and via a tax-exempt equipment lease-purchase agreement between the City, the lessee, and Banc of America Public Capital Corp ("BAPCC"), the lessor ($46 million).

BAPCC was selected for the lease-purchase agreement via a Request for Proposals ("RFP") process initiated on May 14, 2025. Of the six responding banks, BAPCC was found to be the best value in terms of interest rate and flexibility of terms. The lease will be secured by the City's obligation to pay annual lease payments, secured interest in the equipment to be installed by Climatec.

The lease-purchase agreement has a 20-year term at an interest rate of 4.022 percent. Annual principal and interest payments are $3,445,658 in most years, but the first payment of $1,722,828 – one-half the usual annual payment – is due on March 1, 2026. The total cost of the lease-purchase agreement, over the 20-year term, will be $68,913,159 in today's dollars.

The $10 million city contribution will come from multiple sources within the Workers Compensation Fund and from funds in the Fiscal Year ("FY") 2026 "Measure I" budgeted funds for the Climatec effort. In particular:

- Workers Compensation – General Fund $5,525,480
- Workers Compensation – Water Fund $1,180,360
- Workers Compensation – Wastewater Fund $1,168,280
- Measure I Funds $2,125,880

It should be noted that $4 million of Measure I Funds were budgeted in the FY 2026 budget. As mentioned above, about $1.7 million will be used for the first lease-purchase payment, with the bulk of the remaining funding used as part of the City's up-front $10 million contribution. Concerning the use of Workers Compensation fund, Staff continue to analyze the fund and are confident that there are enough resources to cover Workers Compensation claims and use the remaining funds for other purposes. The current fund balance is approximately $16.6 million, and approximately $5.6 million will remain if the funds are used as recommended above.

Savings confirmed via the Monitoring and Verification ("M&V") process for the General, Water, and Wastewater Funds – which are guaranteed by Climatec – will be used to cover the annual lease-purchase payments (~$3.4 million). Staff recommends budgeting Measure I funds to initially cover the full lease-purchase payments through 2035, allowing time for savings to accrue during construction and in the earlier years of useful life for new systems.

CITY of ESCONDIDO

STAFF REPORT

Savings will grow on an annual basis as systems come online and will be measured & verified post-construction. As confirmed savings increase, Measure I funding requirements will correspondingly decrease year-after-year until the annual payment can be paid through a combination of accrued and ongoing annual savings, expected to occur before 2036. This approach ensures the net cash flow stays cumulatively positive each year while transitioning from Measure I funding to project-generated savings as the primary funding source. Structuring the funding plan this way also ensures the program provides a positive net impact for the General Fund year after year.

PREVIOUS ACTION & REPORTS

In March 2024, the City awarded Request for Proposal ("RFP") 23-04 to Climatec and authorized an Energy Services agreement to conduct citywide assessments and program development.

On January 29, 2025, the City Council received a preliminary report on the Citywide Energy Roadmap developed under the terms of the Energy Services Agreement with Climatec.

BACKGROUND

In March 2024, following an RFP process, the City awarded an Energy Services Agreement to Climatec to design and implement a Citywide Energy Roadmap, including comprehensive efficiency improvements and renewable energy measures. Currently, the City spends $12 million annually on electric and natural gas costs and has experienced a 40 percent increase in energy costs over the last five years. Aimed at reducing the rising costs and meeting state energy mandates, the Energy Roadmap will remedy failing and inefficient energy infrastructure and improve essential services.

On January 29, 2025, Climatec presented the preliminary scope of work and funding plan at a Council workshop. At its March 5, 2025 Visioning Meeting, the City Council directed staff to proceed with next steps for finalizing the Energy Roadmap in preparation for program implementation.

To-date, Climatec and staff have completed the following:

- Analyzed electric and natural gas utility baseline data
- Developed an initial project feasibility assessment
- Conducted engineering site assessments
- Verified preliminary scope and funding options
- Conducted detailed assessments of selected measures
- Solicited financing proposals through the City's municipal financial advisor
- Developed a final list of projects to be implemented
- Selected funding options to align with preliminary construction schedule and savings proforma
- Reviewed agreement terms & technical scope details with involved City departments

CITY of ESCONDIDO

STAFF REPORT

PROGRAM OVERVIEW

Summarized in the table below, the proposed Energy Roadmap program includes modernizations for comprehensive citywide energy, gas and water infrastructure, including throughout City buildings, parks, lakes facilities, the water treatment plant, and the wastewater treatment plant

BUILDING AUTOMATION SYSTEM (BAS)	– New BAS at 16 Sites – Convert Pneumatic Controls to DDC/ Integrate into BAS at 2 Sites
HEATING, VENTILATION & AIR CONDITIONING (HVAC)	– HVAC System Retro-commissioning at 3 Sites – New High Efficiency HVAC Units at 21 Sites – Central Plant Modernization & Electrical Upgrades at 2 Sites
LIGHTING	– Interior & Exterior LED Lighting at 26 Sites – Occupancy Sensors/ Dimming Control at 17 Sites – New Sports Field LED Lighting at 3 Sites
RENEWABLES + ELECTRIC VEHICLE (EV) INFRASTRUCTURE	– Solar PV Systems at 6 Sites – Electric Vehicle (EV) Chargers at 10 Sites
POWER RESILIENCY/ ELECTRICAL SYSTEMS	– Microgrid System (Backup Power) at 4 Sites – New High Efficiency Transformers at 10 Sites
BUILDING ENVELOPE	– Modernize Roof (Recoat) at 3 Sites
WATER TREATMENT PLANT & SYSTEM	– New High Efficiency Wash Water Recovery Pump Modernizations & VFDs – New High Efficiency Wash Water Pump Modernizations & VFDs – Hydraulic Model Development & System Recommissioning
WASTEWATER TREATMENT FACILITY (HARRF) & SYSTEM	– New High Efficiency Blowers & Control – Aeration Basin Enhancement w/ Electric Mixers & Baffle System Modernization – New RAS & WAS High Efficiency Pump Modernization – Dissolved Oxygen (DO) Control Study & Optimization – High Strength Waste (HSW) Receiving Station & System – Bioenergy Facility Assessment & Study

NEXT STEPS

After conducting the Public Hearing in accordance with Government Code 4217 energy savings statute, the City Council will consider approval of the attached implementation and financing agreements for the Citywide Energy Roadmap. Pending City Council approval, financing is scheduled to close and an escrow fund will be created on August 28, 2025. Climatec will then kickoff construction mobilization in the coming weeks, with a construction phase anticipated to be 24-36 months.

During and after program construction, Climatec will monitor the savings and provide an annual report for City review. Climatec will also assist with obtaining eligible reimbursements from federal, state and local grants and incentive programs as systems come online (e.g. Inflation Reduction Act incentives).

CITY of ESCONDIDO

STAFF REPORT

RESOLUTIONS

a) Resolution No. 2025-107
b) Resolution No. 2025-107—Exhibit "A"—Good Faith Estimates

ATTACHMENTS

a) Attachment "1"— First Amendment to Energy Services Agreement, including Attachment "A" and Exhibit 1
b) Attachment "2"— Escrow Account Control Agreement
c) Attachment "3"— Equipment Lease/Purchase Agreement
d) Attachment "4"— Budget Adjustment

RESOLUTION NO. 2025-107

A RESOLUTION OF THE CITY COUNCIL OF THE CITY OF ESCONDIDO APPROVING CLIMATEC AGREEMENTS, ASSOCIATED EQUIPMENT LEASE/PURCHASE AGREEMENTS AND ESCROW AND ACCOUNT CONTROL AGREEMENTS, MAKING CERTAIN FINDINGS REQUIRED THEREFORE, AND AUTHORIZING CERTAIN RELATED ACTIONS IN CONNECTION THEREWITH

WHEREAS, it is the policy of the State of California and the intent of the State Legislature to promote all feasible means of energy conservation, efficiency and renewable energy generation; and

WHEREAS, the City of Escondido ("City") finds it to be in the best interests of the City to implement projects to promote energy efficiency and renewable energy to achieve utility budget cost reductions; and

WHEREAS, California Government Code Sections 4217.10 through 4217.18 authorize the City Council of the City (the “City Council”) to enter into one or more energy service contracts if the City Council finds that it is in the best interests of the City and that the anticipated cost to the City for thermal or electrical energy or conservation services under the contract will be less than the anticipated marginal cost to the City of thermal, electrical, or other energy that would have been consumed by the City in the absence of those purchases; and

WHEREAS, the City Council and City staff reviewed the qualifications and pricing submitted by Climatec, LLC (“Climatec”) in May 2023 under RFP No. 23-04 for the Citywide Energy Roadmap project and found Climatec’s qualifications to be bona fide and adequate; and

WHEREAS, Climatec collaborated with City staff to assess the feasibility of various energy conservation measures to reduce the City’s energy consumption and cost and coauthored a design/build scope of work (“Program”) to meet the City’s needs; and

WHEREAS, in order to implement the Program, the City and Climatec desire to enter into a First Amendment to Energy Services Agreement ("ESA Amendment"), which amends that certain Energy Services Agreement, dated as of March 14, 2024, between the City and Climatec (the "Original Energy Services Agreement" and, together with the ESA Amendment, the "Energy Services Agreement"), for Climatec to provide design/build implementation of the energy conservation measures for the price stated therein, and a Measurement & Verification Agreement ("M&V Agreement" and, together with the Energy Services Agreement, the "Climatec Agreements") for Climatec to provide annual reporting and a savings performance guarantee, forms of which have been presented to the City Council at the meeting at which this Resolution has been adopted; and

WHEREAS, Climatec's analysis demonstrates that the cost for energy conservation services provided under the Climatec Agreements is less than the anticipated marginal cost to the City of thermal, electrical or other energy that would have been consumed by the City in the absence of such services under the Climatec Agreements; and

WHEREAS, the City has determined that it is necessary and desirable to finance the acquisition of certain solar and energy efficiency equipment for the benefit of the City (collectively, the "Project"); and

WHEREAS, California Government Code Sections 4217.10 through 4217.18 authorize the City Council to enter into one or more facility financing contracts if the City Council finds that it is in the best interests of the City and that funds for the repayment of the financing or the cost of design, construction, and operation of the improvements/equipment (or both), are projected to be available from revenues resulting from sales of electricity or thermal energy from the improvements/equipment or from funding that otherwise would have been used for purchase of electrical, thermal, or other energy required by the City in the absence of the improvements/equipment (or both); and

WHEREAS, in order to accomplish the financing of the Project, the City and Banc of America Public Capital Corp ("BAPCC") and/or an affiliate of BAPCC desire to enter into one or more Equipment Lease/Purchase Agreements, by and between the City and BAPCC or an affiliate of BAPCC (collectively, the "Lease"), a form of which has been presented to the City Council at the meeting at which this Resolution has been adopted; and

WHEREAS, pursuant to the Lease, the City will grant a security interest in certain equipment owned or to be acquired by the City (the "Equipment") to BAPCC and/or an affiliate of BAPCC in consideration for BAPCC and/or an affiliate of BAPCC financing such Equipment in an amount not to exceed $46,000,000, and the City will lease the Equipment from BAPCC and/or an affiliate of BAPCC and pay certain rental payments in connection therewith; and

WHEREAS, Climatec's analysis indicates that funds for the repayment of the lease payments under the Lease are projected to be available from funding that otherwise would have been used for purchase of electrical, thermal or other energy required by the City in the absence of the Equipment;

WHEREAS, a noticed public hearing was held by the City Council to consider the Climatec Agreements (which will implement the Program), the Lease, and Escrow Agreement (hereinafter defined) and the transaction authorized by this Resolution in accordance with California Government Code Section 4217.10, et seq., specifically Section 4217.12 and Section 4217.13.

NOW, THEREFORE, BE IT RESOLVED by the City Council of the City of Escondido, California as follows:

1. The City Council does hereby find and declare that the above recitals are true and correct, and adopted by this reference as findings of the City Council.

2. The City Council determines that the Climatec Agreements which will implement the Program authorized by this Resolution are in the best interest of the City and its residents and further finds that the cost for energy conservation services provided under the Climatec Agreements is less than the anticipated marginal cost to the City of thermal, electrical or other energy that would have been consumed by the City in the absence of such services under the Climatec Agreements.

3. The City Council determines that the Lease and Escrow Agreement (hereinafter defined) and the transaction authorized by this Resolution are in the best interest of the City and its residents and further finds that the funds for the repayment of the lease payments under the Lease are projected to be available from funding that otherwise would have been used for purchase of electrical, thermal or other energy required by the City in the absence of the Equipment.

4. The forms of the Climatec Agreements presented to this meeting and on file with the City Clerk, are hereby approved. Each of the Mayor of the City, or such member of the City Council as the Mayor may designate, the City Manager of the City, the Deputy City Manager of the City, the Director of Finance of the City, and their authorized designees (the "Authorized Officers") is hereby authorized for and in the name of the City to execute the Climatec Agreements in substantially the forms on file with the City Clerk, with such additions thereto and changes therein as are recommended or approved by Stradling Yocca Carlson & Rauth LLP, as Special Counsel ("Special Counsel"), the City Attorney and the officers executing the same. Approval of such changes shall be conclusively evidenced by the execution and delivery of the Climatec Agreements by such Authorized Officers. Each of the Authorized Officers is hereby authorized to execute, acknowledge and deliver any and all documents required to consummate the transactions contemplated by the Climatec Agreements.

5. The form of the Lease presented to this meeting and on file with the City Clerk, is hereby approved; provided that the maximum principal amount of all rental payments pursuant to the Lease shall

not exceed $46,000,000 and the interest rate on the principal component of the rental payments the interest on which is to be excluded from gross income for federal and State income tax purpose shall not exceed 6.00% (except in the case of any increase due to a late payment, a default or an event of taxability) and the interest rate on the principal component of the rental payments the interest on which is not excluded from gross income for federal income tax purposes shall not exceed 7.00% (except in the case of any increase due to a late payment or a default). Each of the Authorized Officers is hereby authorized for and in the name of the City to execute one or more Leases in substantially the form on file with the City Clerk, with such additions thereto and changes therein as are recommended or approved by Special Counsel, the City Attorney and the officers executing the same. Approval of such changes shall be conclusively evidenced by the execution and delivery of the Leases by such Authorized Officers. Each of the Authorized Officers is hereby authorized to execute, acknowledge and deliver any and all documents required to consummate the transactions contemplated by the Leases.

6. The form of one or more Escrow and Account Control Agreements (collectively, the "Escrow Agreement") by and among BAPCC (or any affiliate of BAPCC), the City and UMB Bank, National Association, as escrow agent, presented to this meeting and on file with the City Clerk, is hereby approved. Each of the Authorized Officers is hereby authorized for and in the name of the City to execute one or more Escrow Agreements in substantially the form on file with the City Clerk, with such additions thereto and changes therein as are recommended or approved by Special Counsel, the City Attorney and the officers executing the same. Approval of such changes shall be conclusively evidenced by the execution and delivery of the Escrow Agreements by such Authorized Officers. Each of the Authorized Officers is hereby authorized to execute, acknowledge and deliver any and all documents required to consummate the transactions contemplated by the Escrow Agreements.

7. Each of the Authorized Officers is hereby authorized, jointly and severally, to do any and all things and to execute and deliver any and all documents which they may deem necessary and advisable in order to consummate the entry into of the Climatec Agreements, Leases and the Escrow Agreements and otherwise effectuate the purposes of this Resolution.

8. The City Council acknowledges that the good faith estimates required by Section 5821.1 of the California Government Code are attached hereto as Exhibit A and are available to the public at the meeting at which this Resolution is approved.

9. All actions heretofore taken by the Authorized Officers with respect to the Climatec Agreements, Lease and Escrow Agreement, or in connection with or related to any of the agreements or documents referenced herein, are hereby approved, confirmed and ratified.

10. This Resolution shall take effect from and after the date of approval and adoption hereof.

EXHIBIT A

GOOD FAITH ESTIMATES

The good faith estimates set forth herein are provided with respect to the Lease in accordance with Section 5852.1 of the California Government Code. Such good faith estimates have been provided to the City by CSG Advisors Incorporated, the City's municipal advisor (the "Municipal Advisor").

Principal Amount. The Municipal Advisor has informed the City that, based on the City's financing plan, its good faith estimate of the aggregate principal amount of the Lease to be issued and sold is **$46,000,000** (the "Estimated Principal Amount").

True Interest Cost of the Lease. The Municipal Advisor has informed the City that, assuming that the Estimated Principal Amount of the Lease is issued and sold, and based on market interest rates prevailing at the time of preparation of such estimate, its good faith estimate of the true interest cost of the Lease, which means the rate necessary to discount the amounts payable on the respective principal and interest payment dates to the purchase price received for the Lease, is **4.274%**.

Finance Charge of the Lease. The Municipal Advisor has informed the City that, assuming that the Estimated Principal Amount of the Lease is issued and sold, and based on market interest rates prevailing at the time of preparation of such estimate, its good faith estimate of the finance charge for the Lease, which means the sum of all fees and charges paid to third parties (or costs associated with the Lease), is **$100,000**.

Amount of Proceeds to be Received. The Municipal Advisor has informed the City that, assuming that the Estimated Principal Amount of the Lease is issued and sold, and based on market interest rates prevailing at the time of preparation of such estimate, its good faith estimate of the amount of proceeds expected to be received by the City for sale of the Lease, less the finance charge of the Lease, as estimated above, and any reserves or capitalized interest paid or funded with proceeds of the Lease, is **$45,900,000**.

Total Payment Amount. The Municipal Advisor has informed the City that, assuming that the Estimated Principal Amount of the Lease is sold, and based on the interest rate of the Lease, its good faith estimate of the total payment amount, which means the sum total of all payments the City will make to pay the Lease, plus the finance charge for the Lease, as described above, not paid with the proceeds of the Lease, calculated to the final maturity of the Lease, is **$68,913,153**, which excludes any reserves or capitalized interest funded or paid with proceeds of the Lease (which may offset such total payment amount).

The foregoing estimates constitute good faith estimates only and are based on information available at the time of preparation of such estimates. The actual principal amount of the Lease issued and sold, the true interest cost thereof, the finance charges thereof, the amount of proceeds received therefrom and total payment amount with respect thereto may differ from such good faith estimates due to (a) the actual date of the sale of the Lease being different than the date assumed for purposes of such estimates, (b) the actual principal amount of Lease issued and sold being different from the Estimated Principal Amount, (c) the actual amortization of the Lease being different than the amortization assumed for purposes of such estimates, (d) the actual market interest rates at the time of sale of the Lease being different than those estimated for purposes of such estimates, (e) other market conditions, or (f) alterations in the City's financing plan, or a combination of such factors. The actual date of the Lease and the actual principal amount of Lease issued and sold will be determined by the City based on the timing of the need for proceeds of the Lease and other factors.

CITY OF ESCONDIDO
FIRST AMENDMENT TO ENERGY SERVICES AGREEMENT

This First Amendment to Energy Services Agreement (“First Amendment”) is made and entered into as of the last signature date set forth below (“Effective Date”),

Between: CITY OF ESCONDIDO
a California municipal corporation
201 N. Broadway
Escondido, CA 92025
Attn: Christopher McKinney, Deputy City Manager
760-839-4090
("CITY")

And: CLIMATEC, LLC
an Arizona limited liability company
2851 West Kathleen Road Phoenix, AZ 85053
Attn: Ashley Lough
602-400-2859
(referred to herein as “Contractor” and “ESCO")

(The CITY and ESCO each may be referred to herein as a “Party” and collectively as the “Parties.”)

WHEREAS, the Parties entered into that certain Energy Services Agreement dated March 14, 2024 (“Agreement”), wherein CITY retained ESCO to provide the development and implementation plan of a Citywide Energy Roadmap consistent with the provisions of California Government Code sections 4217.10 – 4217.18 that will provide sustained energy efficiencies and energy cost savings at project site locations (“Project”), as more specifically described in the Agreement;

WHEREAS, the Parties desire to amend the Agreement to include additional services for Phase 3 of the Project (Implementation/Construction) as described in “Attachment A” to this First Amendment, which is attached hereto and incorporated herein by this reference.

NOW, THEREFORE, in consideration of the mutual covenants, promises, terms, and conditions set forth herein, and the mutual benefits derived therefrom, the Parties hereby agree as follows:

A. The ESCO will furnish all of the Services described in “Attachment A” to this First Amendment.

B. The CITY will compensate the ESCO an additional amount not to exceed the sum of $55,889,697, pursuant to the conditions contained in “Attachment A” to this First Amendment.

C. **INSTALLATION.** Contractor shall provide City with an Energy Infrastructure Modernization Program, as identified in **Attachment A Exhibit 1** and incorporated herein by reference at the total fixed price of $55,889,697 including required taxes and performance bond.

Contractor is responsible for the design, engineering, permits, fees, approvals, project management, installation, startup, training, checkout, warranty, and insurance specifically associated with the Work to be performed. Contractor is not responsible for any equipment, systems, controls, comfort problems, balancing, duct cleaning, existing deficient conditions, etc. not specifically included in this Agreement. Contractor will provide submittals and engineered drawings (if required), for City’s technical review and written approval, prior to initiating construction. All construction and associated cleanup shall be performed and scheduled to minimize any disruption with any ongoing City activities. Contractor shall keep the Site(s) in order and shall maintain a reasonably clean condition and provide the City with safe and proper access to all Work at all times. Contractor requires all underground conduits between buildings to be clear of obstruction, of sufficient size to accommodate new wire and cable, and easily accessible. The City is responsible for Ethernet drops at each location for Energy Management System communication.

D. **SCOPE OF WORK.** The Scope of Work is defined in Attachment “A” of this Amendment. Once this First Amendment is executed by the City and Contractor, Contractor may not revise the First Amendment (including the Scope of Work) in any way except by mutual written agreement with the City.

Contractor shall keep the Site(s) in order when Work is being performed and shall maintain the Site(s) in a reasonably clean condition. The City shall always have access to the Work. Contractor will maintain safety in the performance of the Work and shall erect and maintain, as required by conditions and progress of Work, all necessary safeguards including necessary permits, signs, barriers, lights, and security persons for protection of workers and the public and shall post danger signs warning against hazards created by the Work.

This Agreement is based upon the use of straight time labor only unless stated otherwise in this Agreement. Contractor agrees to keep the job site clean of debris arising out of its own operations. Except as provided herein, City shall not back charge Contractor for any cost or expenses without Contractors written consent. Unless specifically noted in Attachment A or services undertaken by Contractor under this Agreement, Contractor’s obligations under this Agreement expressly exclude any work or service of any nature associated or connected with the identification, abatement, clean up, control, removal or disposal of environment hazards or dangerous substances, to include but not to be limited to asbestos, PCBs, or mold discovered in or on the premises and is limited to the Scope of Work that includes water, wastewater, and/or roofing. However, if any hazardous materials are found within the Work involving water, wastewater and/or roofing, the City has the option to have a 3rd party remediate the hazardous materials or under a separate agreement the Contractor provide remediation at the job site(s). Any language or provision of the Agreement elsewhere contained which may authorize or empower the City to change, modify or alter the scope of work or services to be performed by Contractor shall not operate to compel Contractor to perform any work relating to hazards without Contractor’s express written consent.

E. **SOLAR INSTALLATION.** The Scope of Work excludes correction of concealed conditions that could not have been ascertained by general visual inspection. The Work excludes correction of any existing or previous violations of laws, codes or utility requirements and errors and omissions of the City or other contractors not communicated to Contractor. City will provide all discretionary

permits (permits requiring the discretion of the issuer) required in time to execute the Work within the agreed upon schedule. Contractor will provide all non-discretionary, ministerial (permits not requiring thought and discretion of the issuer) permits required for the provision of the solar installation. City agrees to promptly execute and return provided Preliminary Interconnection Documentation (initial or preliminary paperwork or documentation required by the Utility for interconnection of the system to be executed by the system owner), Preliminary Rebate Documentation (documentation comprising the initial or preliminary paperwork required by the administrator of the Rebate or the Rebate to be reserved) (if applicable), and Site Owner Consent Documentation (agreement from the site owner to install system on the real property identified in the proposal) (if applicable). Attachment D of Tab C located within Exhibit 1 which is referenced in Attachment A of this Amendment, will include commercially reasonable efforts to promptly obtain the PTO (Permission to Operate) from City’s utility. The monitoring equipment provider will provide monitoring hosting services for the first five years of operation. City warrants that they hold title to the installation site and agree to the solar installation on that site.

Terms applicable to the solar scope are as follows:

a. Interconnection Agreement – means an agreement between the City and a particular utility involved for interconnection of the solar output to the electrical grid.
b. Interconnection Equipment – all equipment (including wiring and conduit and metering for net metering) on the City side of the main service meter to enable proper interconnection of the solar system to the grid.

Design – Subject to Council approving Program Implementation, Contractor will complete final elements of design and engineering such as land surveys, geotechnical studies and preparation of design documents and drawings required to prepare submittal packages, obtain permits and procure equipment. Contractor shall prepare the design submittals (prepared by qualified individuals). The submittal shall be submitted to City for approval. City shall provide approvals within fifteen business days from receipt. The Contractor shall not proceed with work until approval is granted by the City.

Unforeseen Site Conditions – Within 10 business days of discovery, Contractor will notify City in writing of (a) subsurface or latent physical conditions at the site differing materially from those described in any contract or City documentation that will affect the price of delivery of the Work. Should such conditions arise, the City will have several options to consider, including identifying an alternative location for the affected scope (e.g. moving Solar PV array) or removing the scope.

F. **INVOICING & PAYMENTS.** Contractor may invoice the City for any equipment and/or materials installed at a job site. City shall have no obligation to pay for equipment or supplies unless and until unconditional releases from all suppliers of the same have been provided to the City. Except for amounts in dispute, the City agrees to pay Contractor amounts invoiced upon receipt of invoice for completion of Work. Except for amounts in dispute, City shall retain 5% from all payments as retention in accordance with Public Contract Code Section 7107. Final Payment, including retention withheld, will be due in accordance with Public Contract Code 7107, or as otherwise provided by law. If Contractor’s undisputed invoice is not paid within 30 days of its receipt, it is delinquent and Contractor may add one percent (1%) per month interest onto delinquent amounts.

G. **INDEPENDENT CONTRACT.** It is agreed between City and Contractor that Contractor shall perform the Work as an independent contractor. Contractor may use subcontractors to perform work hereunder, provided Contractor shall fully pay said subcontractors and in all instances

remain fully responsible for (a) the proper completion of this Agreement and (b) supervising such subcontractor’s work and the quality of their workmanship.

H. **SUBCONTRACTORS**. Contractor shall submit to the City in writing a list of any subcontractors engaged by the Contractor for any Work for the City’s prior written approval, not to be unreasonably withheld. Contractor agrees to bind every subcontractor by the terms of this Contract, including, without limitation, indemnification, insurance, business license and warranty requirements. Contractor shall be fully responsible to City for the Work of its subcontractors and persons directly or indirectly employed by them. The Contract shall not create any contractual relationship between any subcontractor and City.

Contractor and all subcontractors performing the work shall not employ any person who is unfit or unskilled in assigned Work. Contractor and/or subcontractor shall dismiss any person whom City deems incompetent or unfit.

I. **MATERIALS.** All materials shall be new, in compliance with all applicable laws and codes, and shall be covered by a manufacturer’s warranty, if appropriate. If the materials or equipment included in this Agreement become temporarily unavailable, the Contractor shall immediately notify the City in writing of the unavailability and the time for performance of the Work shall be extended to the extent thereof with the City’s written consent. In the case of permanent unavailability, Contractor shall immediately notify the City in writing of the unavailability and shall only be excused from furnishing said materials with the City’s written consent.

J. **OWNERSHIP**. Title to the Equipment/Materials (or portion thereof) shall pass free and clear to the City from the Contractor upon final payment by the City for the Equipment/Materials, Work or Services corresponding to such Equipment (or portion thereof).

K. **COMPLETION.** The Work shall be considered completed upon written approval by the City, provided that the City’s approval shall not be unreasonably withheld. The nature of the Work consists of multiple projects and/or sites, as noted in Attachment ”A” Scope of Work. Once work on a project or a site is deemed by the Contractor to be substantially complete (that is available for beneficial use by the City with the scope of work for that site or project functioning as required) and concurrence is provided by the City, except for minor items (a punch list), Contractor will provide a written Notice of Substantial Completion for that site or project to the City. Final Completion, as previously noted, will occur once the entire scope of work is complete for all sites and projects.

L. **CORRECTION OF ERRORS**. Contractor shall perform, at its own cost, without reimbursement from the City, any work necessary to correct errors or omissions caused by Contractor’s failure to comply with the standard of care required herein.

M. **WARRANTY.** Contractor warrants that the equipment and systems provided under this Agreement shall be free from defects in material and workmanship arising from normal usage for a period of one year from the date of beneficial uses. Within the warranty period, if City provides written notice to Contractor of any such defects within 30 days after the appearance or discovery of such defect, Contractor shall, at its option, repair or replace the defective equipment and return said equipment to City. These warranties do not extend to any equipment which has been repaired by others, abused, altered, or misused, or which has not been properly and reasonably maintained. All transferable manufacturer warranties associated with the equipment will be transferred to the City. These warranties are in lieu of all other warranties, expressed or implied, including but not limited to those of merchantability and fitness for a specific purpose.

N. **LIABILITY.** Neither party shall be liable to the other for any special, indirect, or consequential damages arising in any manner from the equipment, material, or systems furnished or the work performed pursuant to this Agreement.

O. **TERMINATION**. Term of this agreement shall commence as of the Effective Date and, unless sooner terminated, shall expire (with the exception of Warranty obligations) forty-five days after all Work is complete and accepted by the City. The City may terminate this agreement for any reason at any time by providing Contractor not less than 10 business days prior, written notice. Provided Contractor is not then in breach, Contractor will be paid for all documented work satisfactorily performed and for all equipment and materials theretofore purchased that Contractors documents cannot be returned for credit, as of the date of the notice of termination.

P. **DELAYS.** Contractor shall not be liable for any delay in the performance of the Work resulting from or attributed to acts of circumstance beyond Contractor's control, including acts of God, riots, labor disputes, conditions of the premises, or acts or omissions of the City. If City delays project for greater than 60 calendar days, Contractor can recover any cost inflation on un-billed materials that were either stored or yet to be purchased.

Q. **REBATES, UTILITY INCENTIVES.** Unless otherwise stated in the Agreement, or cash flow analysis, any and all rebates, incentives that are earned through the course of this project from public or private utilities, municipalities, development City's or state funding, with the exception of lighting rebates, are 100% the property of the City or their designee. Lighting rebates are 100% the property of Contractor and are used to reduce the project cost to the City. The paperwork, inspections and verification required to collect these monies (except for lighting rebates) are the sole responsibility of the City.

R. **LABOR CODE REQUIREMENTS**: If the Contract Price is more than $1,000, and the Work is a "public works" as defined in the Labor Code including, without limitation, §§ 1720 - 1720.6 and 1771 then this subsection applies. City hereby provides notice of the requirements described in Labor Code § 1771.1(a) that a contractor or subcontractor shall not be qualified to bid on, be listed in a bid proposal, or engage in the performance of any contract for public work, unless currently registered and qualified to perform public work pursuant to Labor Code § 1725.5. Contractor acknowledges that all or a portion of the Services under this Contract are a public work, and that it and its subcontractors have complied with Labor Code § 1725.5, including, without limitation, the registration requirements thereof. Contractor shall post all required job site notices and shall comply with all applicable requirements prescribed thereby, including but not limited to Labor Code § 1771.4. Contractor shall comply with all applicable provisions of Chapter 1 of Part 7 of Division 2 of the Labor Code (Section 1720 et seq.) and California Code of Regulations, Title 8, Chapter 8, Subchapters 3-6 (Section 16000 et seq.) Willful failure to comply may result in penalties, including loss of the right to bid on or receive public works contracts. Copies of the prevailing rate of per diem wages are on file with the City and available on the DIR website. Monitoring and enforcement of the prevailing wage laws and related requirements will be performed by the Labor Commissioner/ Department of Labor Standards Enforcement (DLSE). The Contractor and all subcontractors shall furnish certified payroll records as required pursuant Labor Code § 1776 directly to the Labor Commissioner in accordance with Labor Code § 1771.4 on at least on a monthly basis (or more frequently if required by the City or the Labor Commissioner) and in a format prescribed by the Labor Commissioner. The Contractor and all Subcontractors shall comply with the provisions of California Labor Code including, but not limited to sections 1777.5, 1777.6, and 1777.7 concerning the employment of apprentices. The Contractor and all subcontractors shall comply with the requirements of said sections, including applicable portions of all subsequent amendments in the employment of apprentices; however, the Contractor shall have full responsibility for compliance with said Labor Code sections, for all

apprenticeable occupations, regardless of any other contractual or employment relationships alleged to exist.

S. **INFLATION REDUCTION ACT**.

1. Contractor acknowledges that the Buyer intends that the Facility will satisfy the requirements for a refundable tax credit under IRC §§6417 and 48E.
2. Contractor will meet the prevailing wage and apprenticeship requirements established in IRC §48E(d)(3) and (d)(4), and as further described in Reg. §§1.48E–3, 1.45–6 through 1.45–8, 1.45–12, and other applicable IRS guidance.
3. All laborers and mechanics employed by Contractor in connection with the construction, the alteration or repair of the Facility will be paid wages at rates not less than the prevailing rates for construction, alteration, or repair of a similar character in the locality in which the Facility is located as most recently determined by the Secretary of Labor, in accordance with subchapter IV of chapter 31 of title 40, United States Code (Davis-Bacon Act). Contractor will employ "qualified apprentices" enrolled in a registered apprenticeship program for at least 15% of the total construction labor hours any of its mechanics or labors completed work toward improving the Facility, subject to meeting any apprentice-to-journey worker ratios, as described further in Treas. Reg 1.145-8. Construction is defined as onsite physical work performed on City premises.
4. Contractor will meet the apprenticeship "Participation Requirement", which requires that each (sub)contractor that employs four or more laborers or mechanics (various trade personnel) to perform construction, alteration, or repair work with respect to the construction of the Facility must hire at least one qualified apprentice throughout the project, and the apprenticeship "Ratio Requirement", which states that, on a daily basis, each (sub)contractor must not exceed the required ratio (as governed by the individual apprentice program) of apprentices-to-journeyworkers.
5. Contractor will maintain books and records sufficient to document that it satisfied the prevailing wage and apprenticeship requirements (and made such records available to City), as provided in Treas. Reg. §1.45-12, including payroll records for each laborer and mechanic including but not limited to, any agreements entered into with registered apprenticeship programs, identifying information, location and type of facility, labor classification, hourly rate, labor hours worked, wages paid for each pay period, and amount and timing of any correction payment.
6. Contractor shall "begin construction" of the Project on or before December 31, 2025. "Beginning construction" is defined in IRS Notice 2018-59 as starting physical work of a significant nature ("Physical Work Test") or incurring 5% or more of the total cost of energy property ("5% Safe Harbor"); provided, Contractor shall comply with any subsequently released applicable guidance regarding "Beginning Construction".
7. Contractor shall meet the Physical Work Test, as described in IRS Notice 2018-59 and any successors thereto, to begin construction on the Project on or before December 31, 2025. As described in Notice 2018-59, preliminary activities such as planning, design, site exploration, or surveys do not qualify as physical work of a significant nature.
8. Per Continuity Safe Harbor provisions of the IRS, the project must be placed into service by the end of a calendar year that is no more than four calendar years after the calendar year during which construction of the Project began.

T. **DISPUTES.** The Dispute Resolution Provisions require that each Claim be in writing, served on the other party, describing specific details of the dispute relating to changes in Work or claim for additional compensation, within seven calendar days of the occurrence of the condition. This notice must be provided via certified mail. For a reasonable period commencing on the day written notice of dispute was provided, but not to exceed 30 calendar days, the parties shall in

good faith attempt to resolve the dispute. If the parties are unable to resolve the Dispute during this period, the parties shall proceed as required by Public Contract Code Sections 9204 and 20104, et seq. Effective January 1, 1991, Section 20104 et seq., of the Public Contract Code prescribes a process utilizing informal conferences, non-binding judicial supervised mediation, and judicial arbitration to resolve disputes on construction claims of $375,000 or less. Effective January 1, 2017, Section 9204 of the Public Contract Code prescribes a process for negotiation and mediation to resolve disputes on construction claims. The intent of this Section is to require that the parties hereto shall proceed to resolve any disputes in accordance with the procedures set forth in Sections 9204 and 20104.

In addition to any and all contract requirements pertaining to notices of and requests for compensation or payment for extra work, disputed work, claims and/or changed conditions, Contractor must comply with the claim procedures set forth in Government Code section 900, et seq., prior to filing any lawsuit against the Purchaser.

U. **CHANGE ORDER (Mid-Performance Amendments)**. Contractor and the City recognize that:

1. City may desire a mid-job change in the specifications or scope that would add time and cost to the specified work or inconvenience Contractor.
2. Other provisions of the Agreement may be difficult to carry out because of unforeseen events, such as material shortage or labor strikes.

If these or other events beyond the control of the parties reasonably require adjustments to this Agreement, the parties shall make a good faith attempt to agree on all necessary particulars. Such agreements shall be put in writing, signed by the parties, and added to this Agreement. Failure to reach agreement shall be deemed a dispute to be resolved as agreed in section 20 of this Agreement.

U**. PAYMENT & PERFORMANCE BONDS**: Contractor shall not commence Work until it has provided to City, in the form provided by the City, a Payment (Labor and Material) Bond and a Performance Bond, each in an amount equivalent to 100% of the Contract Price issued by an admitted surety as defined in Code of Civil Procedure § 995.120.

V. **OCCUPANCY**: City may occupy buildings before Contract completion and occupancy shall not constitute acceptance of any Work, nor shall occupancy extend the Contract completion date.

All other terms of the Agreement not referenced in this First Amendment shall remain unchanged and in full force and effect. In the event of a conflict between a provision of the Agreement and this First Amendment, this First Amendment shall prevail.

This First Amendment and the Agreement, together with any attachments or other documents described or incorporated therein, if any, constitute the entire agreement and understanding of the Parties, and there are no other terms or conditions, written or oral, controlling this matter.

This First Amendment may be executed on separate counterparts that, upon completion, may be assembled into and shall be construed as one document. Delivery of an executed signature page of this First Amendment by electronic means, including an attachment to an email, shall be effective as delivery of an executed original.

Unless a different date is provided in this First Amendment, the effective date of this First Amendment shall be the latest date of execution set forth by the names of the signatories below

IN WITNESS WHEREOF, this First Amendment is executed by the Parties or their duly authorized representatives as of the Effective Date:

CITY OF ESCONDIDO

Date: _____

_____
Dane White, Mayor

CLIMATEC, LLC

Date: _____

_____
Signature

_____
Name & Title (please print)

APPROVED AS TO FORM:
OFFICE OF THE CITY ATTORNEY
MICHAEL R. MCGUINNESS, CITY ATTORNEY

BY: _____

DATE: _____

THE CITY OF ESCONDIDO DOES NOT DISCRIMINATE AGAINST QUALIFIED PERSONS WITH DISABILITIES.

ATTACHMENT "A"

Scope of Work

A. General

Climatec, LLC, an Arizona limited liability company ("ESCO") will provide the City of Escondido, a California municipal corporation ("City") with implementation and construction services for the City's Citywide Energy Roadmap Project ("Project").

B. Location

ESCO will provide services at multiple City locations as described in **Exhibit 1**, to this Scope of Work, which is attached hereto and incorporated herein by this reference. In the event of a conflict between Exhibit 1 and this Agreement, the terms of the Agreement shall prevail.

C. Services

Implementation and construction services provided under this First Amendment shall be in accordance with Exhibit 1.

D. Scheduling

ESCO to schedule specific dates of work in advance by contacting Nicholas Josten at 760-839-4655 or nick.josten@escondido.gov. Further instructions will be provided upon scheduling.

E. Contract Price and Payment Terms

The contract price of this First Amendment shall not exceed **$55,889,697**. The contract price of this First Amendment ($55,889,697) will bring the total contract price of the Agreement to $55,889,697. The contract price of this First Amendment includes all labor, materials, equipment, and transportation required to perform the work. Services will be billed as services are performed. Payment will be made after services have been performed and within 30 days of receipt of an invoice for those services.

F. Term

The term of this First Amendment shall be from the Effective Date of the this First Amendment through **March 1, 2029**.

ESCONDIDO
City of Choice

City of Escondido | Citywide Energy Roadmap

First Amendment to the Energy Services Agreement

Attachment A / Exhibit 1

For Council Consideration on August 20, 2025

EXHIBIT 1 TABLE OF CONTENTS

TABLE OF CONTENTS
TAB A: COVER LETTER
TAB B: PROGRAM SUMMARY .....
TAB C: DETAILED SCOPE .....
- ATTACHMENT A: SCOPE BY FACILITY & MEASURE .....
- ATTACHMENT B: SOLAR INSTALLATION .....
- ATTACHMENT C: LIGHTING SUMMARY .....
- ATTACHMENT D: HVAC REPLACEMENT INVENTORY .....
- ATTACHMENT E: TECHNICAL APPENDIX .....

TAB D: PRELIMINARY SCHEDULE .....
TAB E: PAYMENT BOND .....
TAB F: PERFORMANCE BOND .....
TAB H: M&V AGREEMENT .....

TAB A: COVER LETTER

6/27/2025

Christopher McKinney
Deputy City Manager
City of Escondido
201 N. Broadway
Escondido, CA 92025-2798

RE: ENERGY ROADMAP IMPLEMENTATION

Dear Chris,

Thank you for your team's collaboration over the last 18 months to develop a Citywide Energy Roadmap ("the program"). Together we completed the following steps of the program development process in preparation for implementation:

- Utility Baseline Development & Rate Analysis
- Engineering and Site-Level Assessments
- Staff Departmental Interviews
- Feasibility Studies and Financial Modeling
- Development and Validation of Scope of Work
- Competitive Financing Solicitation via Municipal Advisor
- Legal and Due Diligence Review Process

After the January 2025 study session, Council directed Staff to finalize the scope of work and funding plan with the intent to take action this summer. In order for Council to authorize program implementation, a Government Code 4217 public hearing is required, public notice for which must be posted 14 days prior. After the public hearing is conducted, Council may consider adoption of a resolution to make certain findings and approve the agreements for Climatec and the associated financing agreements.

Please see our enclosed proposal for implementing the Citywide Energy Roadmap. The Energy Services Agreement, originally executed in March 2024, shall be amended to include terms relevant to construction and program implementation, a detailed scope of work, technical appendices, and measurement & verification protocols.

If authorized by Council, a kickoff meeting with key city stakeholders would be conducted before commencing construction mobilization efforts. The construction duration is expected to take 24-36 months depending on equipment lead times and other factors such as utility interconnection.

We are excited to bring your program to fruition and help the City achieve its strategic objectives. Let us know if you have any questions.

Regards,

Ashley Lough

Ashley Lough
Director of Energy Services | Direct: (602) 400-2859 | alough@climatec.com

TAB B: PROGRAM SUMMARY

Please see program summary documents including final scope of work and funding plan. These documents were presented to Staff in May 2025 after the completion of the Detailed Assessment.

CITY OF ESCONDIDO
CITYWIDE ENERGY ROADMAP

FINAL SCOPE OF WORK & FUNDING PLAN	
BUILDING AUTOMATION SYSTEM (BAS)	– New BAS at 16 Sites – Convert Pneumatic Controls to DDC/ Integrate into BAS at 2 Sites
HEATING, VENTILATION & AIR CONDITIONING (HVAC)	– HVAC System Retro-commissioning at 3 Sites – New High Efficiency HVAC Units at 21 Sites – Central Plant Modernization & Electrical Upgrades at 2 Sites
LIGHTING	– Interior LED Lighting at 26 Sites – Exterior LED Lighting at 26 Sites – Occupancy Sensors/ Dimming Control at 17 Sites – New Sports Field LED Lighting at 3 Sites
RENEWABLES + ELECTRIC VEHICLE (EV) INFRASTRUCTURE	– Solar PV Systems at 6 Sites – Electric Vehicle (EV) Chargers at 10 Sites
POWER RESILIENCY / ELECTRICAL SYSTEMS	– Microgrid System (Backup Power) at 4 Sites – New High Efficiency Transformers at 10 Sites
BUILDING ENVELOPE	– Modernize Roof (Recoat) at 3 Sites
WATER TREATMENT PLANT & SYSTEM	– New High Efficiency Wash Water Recovery Pump Modernizations & VFDs – New High Efficiency Wash Water Pump Modernizations & VFDs – Hydraulic Model Development & System Recommissioning
WASTEWATER TREATMENT FACILITY (HARRF) & SYSTEM	– New High Efficiency Blowers & Control – Aeration Basin Enhancement w/ Electric Mixers & Baffle System Modernization – New RAS & WAS High Efficiency Pump Modernization – Dissolved Oxygen (DO) Control Study & Optimization – High Strength Waste (HSW) Receiving Station & System – Bioenergy Facility Assessment & Study
TOTAL INFRASTRUCTURE MODERNIZATIONS	– $ 55,889,697
LIFECYCLE SAVINGS	– $ 83,601,487

CITY OF ESCONDIDO
CITYWIDE ENERGY ROADMAP

FINAL SCOPE OF WORK & FUNDING PLAN	
FUNDING SOURCES	– Municipal Lease-Purchase – Measure I – City Contributions – Guaranteed Savings
% OF TOTAL PROGRAM BY FUND	– General Fund: 67% – Water Enterprise Fund: 9% – Wastewater Enterprise Fund: 24%
% OF OPERATING SAVING BY FUND	– General Fund: 74% – Water Enterprise Fund: 1% – Wastewater Enterprise Fund: 25%
OTHER PROGRAM BENEFITS	– Leverage Measure I & guaranteed savings to help eliminate structural deficit – Hedge against construction price inflation & utility rate increases – Remedy over $40 million in failing infrastructure & deferred maintenance needs – Expedite implementation and eliminate change order risk – Improve essential services, promote public safety & attract development – Meet State mandates & demonstrate environmental stewardship – Reduced carbon footprint by 9,158,423 pounds of CO_2 equivalent – Promote Staff & operational efficiency

CITY OF ESCONDIDO
CITYWIDE ENERGY ROADMAP

% OF TOTAL PROGRAM BY FUND

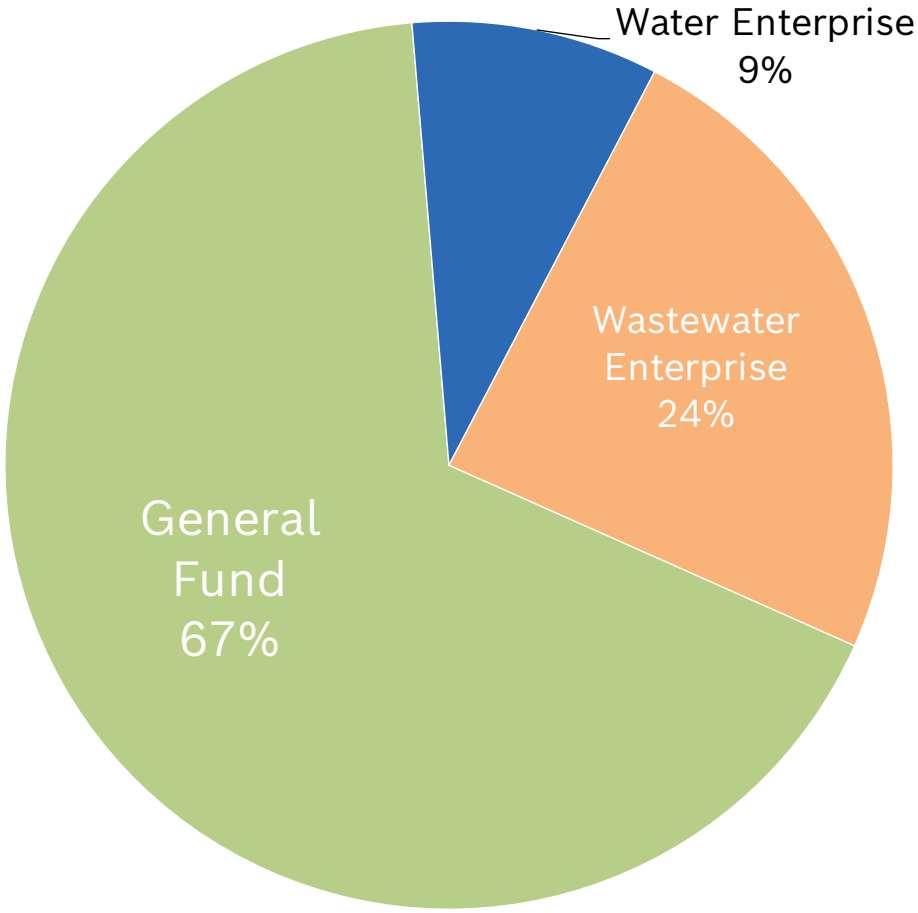

% OF TOTAL OPERATING SAVINGS BY FUND

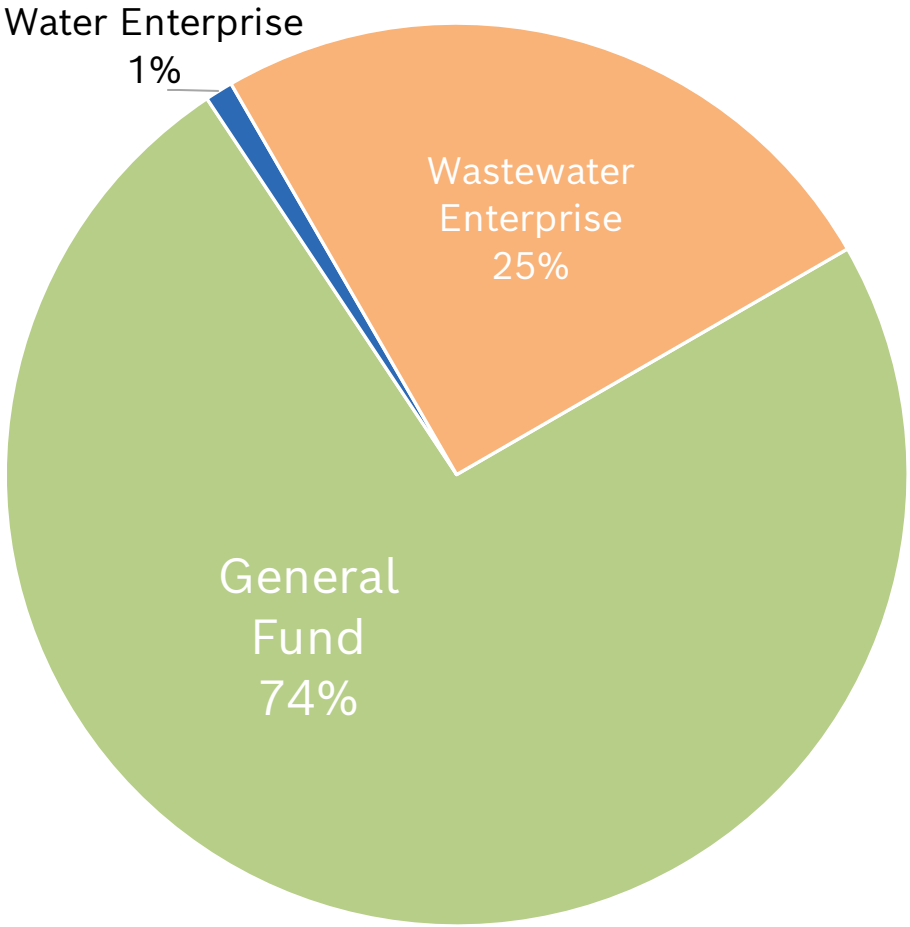

CITY OF ESCONDIDO
CITYWIDE ENERGY ROADMAP

BREAKDOWN BY MEASURE	
BUILDING AUTOMATION SYSTEMS (BAS)	$3,056,516
HVAC	$5,094,193
LIGHTING	$7,131,871
BUILDING ENVELOPE	$1,018,839
RENEWABLES & EV INFRASTRUCTURE	$15,792,000
POWER RESILIENCY/ ELECTRICAL SYSTEMS	$5,603,613
WTP & SYSTEM	$5,094,194
WWTP & SYSTEM	$13,098,470
TOTAL PROGRAM	$55,889,696

% OF TOTAL PROGRAM BY MEASURE

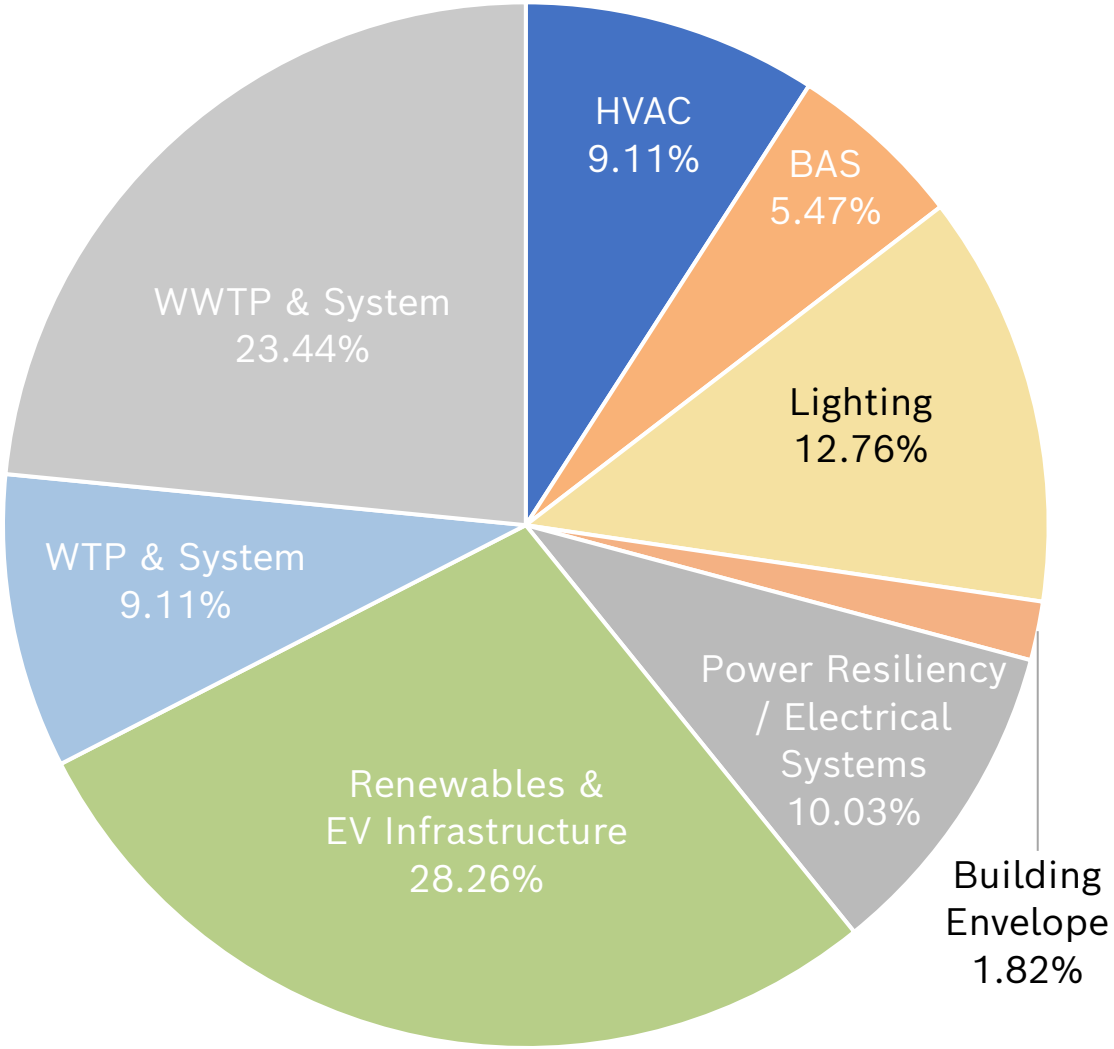

TAB C: DETAILED SCOPE

The Citywide Energy Roadmap detailed scope is outlined in the following attachments:

A. SCOPE BY FACILITY & MEASURE
B. SOLAR INSTALLATION
C. LIGHTING SUMMARY
D. HVAC REPLACEMENT INVENTORY
E. TECHNICAL APPENDIX

Attachment "A"

Scope by Facility & Measure

Water Treatment Plant

Wash Water Recovery Pump VFD Upgrades

- Replace three (3) existing PSC motors with high efficiency induction motors and install Allen Bradley Variable Frequency Drives (VFDs) to modulate flow rate based on plant demand.

  The Scope of Work includes:
  - Demolition and disposal of existing Wash Water Recovery pump motors.
  - Install new, high-efficiency induction pump motors on three (3) existing pumps (2 @ 150 HP, 1 @ 100 HP).
  - Reuse existing motor electrical feeders.
  - Install new concrete pad and canopy adjacent to existing electrical enclosure to house three (3) new VFD cabinets.
  - Install outdoor-rated VFD cabinets with integral cooling systems.
  - Install additional control wiring to support VFDs.
  - Program VFDs using set points provided by plant personnel.
  - Demolition of electrical panels in existing enclosure. Enclosure to remain.

  The Scope of Work excludes:
  - Undisclosed electrical and structural upgrades/modifications.
  - System integration (PLC). To be performed by plant personnel.
  - Demolition of existing electrical equipment enclosure.

Wash Water Pump VFD Upgrades

- Replace one (1) of the 60 HP pumps and associated motor (P-7) with one (1) new optimally sized, high efficiency, 40 HP pump and induction motor. Install new Allen Bradley VFD on existing 40 HP Wash Water pump and the new 40 HP Wash Water pump to modulate flow rate based on plant demand. Install Reduced Voltage Soft Starter (RVSS) on remaining existing 60 HP pump.

  The Scope of Work includes:
  - Demolition of one (1) 60 HP pump (P-7 or P-8) and associated motor.
  - Install new 40 HP pump, to replace the previous 60 HP pump, and induction motor to match existing P-33 pump and motor.
  - Reuse existing motor electrical feeders.
  - Install new VFDs on East wall of electrical room to serve new and existing 40 HP pumps.
  - Install RVSS on existing 60 HP pump.
  - Remove and replace existing wiring from VFDs and Soft Starters to pump motors.
  - Install additional control wiring to support VFDs.
  - Program VFDs using set points provided by plant personnel.

The Scope of Work excludes:

- Undisclosed electrical and structural upgrades/modifications.
- System integration (PLC). To be performed by plant personnel.

Update City's Hydraulic Model

Convert and update the City's existing hydraulic model, the latest version of which was developed using H2OMap to support the City's 2012 Master Plan and recalibrate to reflect modifications made to the system to date. This effort is based on the following:

- The City's water distribution system is comprised of approximately 440 miles of pipeline with 25,000 service meters, 5 pump stations, 11 reservoirs, and 50 pressure control stations.
- Import assets from H2OMap model into InfoWater Pro, the City's selected modeling platform and update to reflect current conditions. Updates will be based on record drawings and available data, including but not limited to: GIS data of system assets, operational controls (e.g., pressure-reducing valve settings), land use data to assign demand use type and appropriate fire flows.
- Analysis of the following demand scenarios during both winter and summer: Average Day Demand (ADD), Maximum Day Demand (MDD), and Peak Hour Demand (PHD).
- Calibrate model to steady-state conditions for above demand scenarios using results from fire hydrant flow test. Climatec's engineers will prepare a hydrant testing plan and assist City staff in performing the flow tests. It is assumed District staff will provide the equipment and operate the valves, and that Climatec's engineers will assist and record the results.
- Once calibrated, run the model for the following scenarios:
    - Existing seasonal demands (ADD, MMD, PHD) during both summer and winter.
    - Fire flow analysis to verify model can be used to estimate available fire flow during MDD.
    - Up to ten (10) future model scenarios as determined by Climatec's engineers and the City to identify energy savings opportunities.
- Develop draft and final TM summarizing model updates, recalibration, and results of future scenarios to identify energy savings opportunities.
- Develop a Water System Hydraulic Model Reference Manual to include:
    - Description of the model development process.
    - Model calibration results.
    - Workflow documentation for the City to perform model runs.
    - Workflow documentation for the City to add features, perform model updates, and recalibrate the model.
- Provide hydraulic model training at the City's offices covering the use of the model. To include three separate four (4)-hour sessions.
- Provide draft and final hydraulic model report.

Lighting

- Retrofit identified interior T8, T12, and HID lighting systems with new high efficiency LED lighting systems. Please see the Lighting Summary in Attachment B for information on lighting scope, quantities, and locations. Occupancy sensors and/or dimming control, if provided, will be identified within the Lighting Summary.

Mechanical

- Replace three (3) mini-split heat pump systems with new high efficiency units of similar size and capacity of previous units. Please refer to the Mechanical Replacement Inventory for equipment size and location.
  The Scope of Work Includes:
  - Removal and proper disposal of existing units.
  - Proper containment and disposal of refrigerant per EPA guidelines.
  - Installation of new units.
  - Flush and reconnect existing line set and pressure test.
  - Disconnection/reconnection of the existing electrical service.
  - Installation of new electrical disconnects.
  - Condensate connections.
  - Start-up/testing of the new units and connection to the new Wi-Fi smart thermostat network.

  The Scope of Work Excludes:
  - Undisclosed electrical and structural upgrades/modifications.
  - Roofing repairs not directly related to the scope of mechanical work.
  - Any required programming or system upgrades to the existing fire alarm system.

- Replace two (2) packaged gas / electric units with new high efficiency packaged heat pump units of similar size and capacity of previous units. Please refer to the Mechanical Replacement Inventory for equipment size and location.
  The Scope of Work Includes:
  - Removal and proper disposal of existing units.
  - Proper containment and disposal of refrigerant per EPA guidelines.
  - Installation of new units.
  - Curb modifications, rigging, setting new units onto roof curb as necessary.
  - Disconnection/reconnection of the existing electrical service.
  - Installation of new electrical disconnects.
  - Condensate connections.
  - Cap existing gas lines
  - Start-up/testing of the new units and connection to the new Wi-Fi smart thermostat network.

The Scope of Work Excludes:

- Undisclosed electrical and structural upgrades/modifications.
- Roofing repairs not directly related to the scope of mechanical work.
- Any required programming or system upgrades to the existing fire alarm system.
- Duct repair and air balancing

Controls

- Provide and install nine (9) new Wi-Fi smart thermostats w/ CO2 monitoring.

The Scope of Work includes:

- Disconnect and remove the existing thermostats.
- Install new locally mounted Wi-Fi smart thermostats to allow for local control and override capabilities within a pre-programmed range.
- Programming and checkout.

The Scope of Work excludes:

- Any required upgrades or improvements to the existing network.
- Controls for existing evaporative cooling units, heating only units, ductless split system units, and window AC units.

Transformers

- Replace five (5) existing transformers with new equal capacity high efficiency transformers. The new transformers will be of the same electrical configuration and be placed in the same location and fit within existing constraints as the existing transformers.
  The Scope of Work Includes:
  - Remove and dispose of existing transformers.
  - Installation of new dry type, low loss, high efficiency transformers.
  - Disconnect / reconnect primary and secondary feeders.
  - Proper grounding connections.
  - Installation per manufacturer's guidelines.
  - Compliance with all state, local electric codes.

  The Scope of Work Excludes:
  - Upgrades, repairs, or additional work required to bring undisclosed or unforeseen electrical deficiencies up to current code.

Hale Avenue Resource Recovery Facility (HARRF)

Blower Replacement

- Replace three (3) existing Turblex blowers with two (2) APG Neuros dual core high speed turbo blowers.

The Scope of Work includes:

- Demolition and disposal of the three (3) existing Turbo Blowers
- Demolition of existing blower silencer discharge.
- Demolition of existing concrete blower support pads.
- Demolition of existing blower control panels
- Installation of two (2) APG Neuros (2x330 HP) dual core high speed turbo blowers equipped with Allen Bradley VFDs. Including all required inlet & discharge check and butterfly valves and expansion joints, and Allen Bradley PLC control panel.
- Existing conduit and wiring to be reused.
- Construct or modify existing air inlet and outlet piping to accommodate installation of new blowers. Main header to remain unchanged.
- Duct modifications as needed to reconnect new blowers.
- Reconfigure existing blower soft-start panels to be in-line.
- Installation of new concrete pads and anchorage.
- Installation of inlet and discharge valves and expansion joints.
- Reconfigure existing blowers Master PLC to communicate with new Neuros control panels.

The Scope of Work excludes:

- Undisclosed electrical and structural upgrades/modifications.
- System integration (PLC). To be performed by plant personnel.
- SCADA programming. To be performed by plant personnel.

Aeration Basin Mixing

- Replace coarse bubble diffusers in first zone of each aeration basin with electric mixers.

  The Scope of Work includes:

  - Demolish existing coarse aeration diffusers and piping (including supports) downstream of isolation air valve.
  - Remove existing isolation air valve and install blind flange.
  - Install new conduits and wiring to electrical room in Blower Building utilizing existing overhead support system.
  - Install five (5) new submersible mixers on slide rails – one (1) mixer for each process train. Motors to be equipped with soft starters.
  - Replace existing baffling systems along first wall in each basin train with in-kind redwood system.

The Scope of Work excludes:

- Undisclosed electrical and structural upgrades/modifications.
- Replacing or repairing inoperable isolation gates. Assumption is that existing isolation gates to each basin provide adequate seal for construction purposes.
- Preparation of aeration basin for work to be performed. City to drain basins, remove accumulated debris, and wash down.
- Filling of Basin. Once mixer and baffle installation is complete, plant personnel are to fill basin and return to service.
- System integration (PLC). To be performed by plant personnel.
- SCADA programming. To be performed by plant personnel.

RAS & WAS Pump Replacements

- Replace the six (6) Return Activated Sludge (RAS) pumps serving Clarifiers 1-4 and the two (2) Waste Activated Sludge (WAS) pumps and their associated VFDs.

The Scope of Work includes:

- Demolition of existing RAS and WAS pumps, motors, and VFDs including disposal.
- Demolition of existing concrete pump support pads.
- Demolition of existing seal water system.
- Installation of three (3) 60 HP RAS pumps to serve secondary clarifiers 3 & 4.
- Installation of three (3) 25 HP RAS pumps to serve secondary Clarifiers 1 & 2.
- Installation of two (2) 40 HP WAS pumps.
- Installation of eight (8) new Allen Bradley VFDs to serve the new pumps in the existing electrical Bldg. currently serving the existing RAS & WAS pumps.
- Modify or replace the existing RAS and WAS pump inlet and outlet piping to accommodate the new pumps.
- Install new seal water system as needed.
- Reuse existing E-Stops.
- Reuse existing VFD's conduit and wiring.

The Scope of Work excludes:

- Undisclosed electrical and structural upgrades/modifications.
- Pipe modifications downstream of pump discharge connection.
- Pressure monitoring changes to current configuration.
- Additional HOA switches
- Removal of existing RAS & WAS pump wiring.
- System integration (PLC). To be performed by plant personnel.
- SCADA programming. To be performed by plant personnel.

High Strength Waste Retrofit

- Install additional 10,000-gallon High Strength Waste storage tank.

  The Scope of Work includes:

  - Install new reinforced concrete pad to support new storage tank.
  - Install new 10,000-gallon capacity Fiberglass Reinforced Plastic (FRP) tank with mechanical mixer.
  - Install combined macerator and solids separator system in-line and upstream of new tank.
  - Extend new piping to inlets at both, the existing Tank and new Tank.
  - Install Two (2) new 4" plug valves downstream of Macerator to control waste stream flow direction to either tank.
  - Reuse existing tank piping.
  - Power and controls for macerator and tank mixer to run to electrical room on second floor of adjacent building.
  - Local control panels to be installed for new macerator and tank mixer.

  The Scope of Work excludes:

  - Undisclosed electrical and structural upgrades/modifications.
  - Providing level switches
  - System integration (PLC). To be performed by plant personnel.
  - SCADA programming. To be performed by plant personnel.

Secondary Treatment Process Model

- Develop a baseline process model for the HARRF that allows evaluation of the activated sludge secondary treatment system. The model is anticipated to be a dynamic model calibrated to current conditions. The model will be developed using a commercially available wastewater process simulator, such as BioWin or GPS-X.

  Once developed and calibrated, the process model will be used to simulate operational changes (e.g., reduced concentrations of dissolved oxygen and/or RAS flowrates) within the activated sludge process to identify potential cost savings while complying with regulatory discharge requirements. Scenarios that contemplate structural changes to the process train will not be evaluated under this task.

  Draft and final versions of a process model report will be prepared that document the model structure, assumptions, raw analytical and operating data used for calibration, as well as calibration results. The report will also summarize the results of simulated operational changes with associated cost savings for each scenario.

Bioenergy Facility Assessment

- Review the City of Escondido's bioenergy facility purchase agreement. Review will assess the efficiency and effectiveness of the installed bioenergy system, including gas conditioning equipment, and quality of the existing biogas. Biogas quality review will include testing for compatibility with the existing bioenergy system.

  This assessment will include the following tasks:
  - Review of available documents.
  - Site visit to bioenergy facility, located at HARRF.
  - Biogas sampling and testing.
  - Draft and final report of findings for
    1) bioenergy system assessment, and
    2) biogas quality

  Deliverables:
  - Draft and final geotechnical report.
  - Draft and final process model report.
  - Draft and final bioenergy facility assessment report.

  Assumptions related to process model development:
  - Level of effort assumes BioWin or GPS-X wastewater modeling simulation software.
  - City to provide current conditions datasets in spreadsheet format.
  - Field work and/or sampling to validate model is not included in the scope of work.
  - Project schedule assumes two-week review time by the City for each deliverable.
  - Fee schedule includes time to compile, sign, and transfer deliverables.
  - QA/QC review time from senior staff.

Lighting

- Retrofit identified interior T8, HID, and incandescent lighting systems with new high efficiency LED lighting systems. Please see the Lighting Summary in Attachment B for information on lighting scope, quantities, and locations. Occupancy sensors and/or dimming control, if provided, will be identified within the Lighting Summary.

- Retrofit identified building and pole mounted HID lighting systems with new high efficiency LED lighting systems. Please see the Lighting Summary in Attachment B for information on lighting scope, quantities, and locations.

Mechanical

- Replace one (1) split-system heat pump with new high efficiency unit of similar size and capacity of previous unit. Please refer to the Mechanical Replacement Inventory for equipment size and location.
  The Scope of Work Includes:
  - Removal and proper disposal of existing unit.
  - Proper containment and disposal of refrigerant per EPA guidelines.
  - Installation of new unit.
  - Flush and reconnect existing line set and pressure test.
  - Disconnection/reconnection of the existing electrical service.
  - Installation of new electrical disconnects.
  - Condensate connections.
  - Start-up/testing of the new unit and connection to existing BAS.

  The Scope of Work Excludes:
  - Undisclosed electrical and structural upgrades/modifications.
  - Roofing repairs not directly related to the scope of mechanical work.
  - Any required programming or system upgrades to the existing fire alarm system.
  - Duct repair and air balancing

- Replace two (2) packaged gas / electric units with new high efficiency packaged heat pump units of similar size and capacity of previous units. Please refer to the Mechanical Replacement Inventory for equipment size and location.
  The Scope of Work Includes:
  - Removal and proper disposal of existing units.
  - Proper containment and disposal of refrigerant per EPA guidelines.
  - Installation of new units.
  - Curb modifications, rigging, setting new units onto roof curb as necessary.
  - Disconnection/reconnection of the existing electrical service.
  - Installation of new electrical disconnects.
  - Condensate connections.
  - Cap existing gas lines.
  - Start-up/testing of the new units and connection to the existing BAS.

  The Scope of Work Excludes:
  - Undisclosed electrical and structural upgrades/modifications.
  - Roofing repairs not directly related to the scope of mechanical work.
  - Any required programming or system upgrades to the existing fire alarm system.
  - Duct repair and air balancing.

Transformers

- Replace five (5) existing transformers with new equal capacity high efficiency transformers. The new transformers will be of the same electrical configuration and be placed in the same location and fit within existing constraints as the existing transformers.
  The Scope of Work Includes:
  - Remove and dispose of existing transformers.
  - Installation of new dry type, low loss, high efficiency transformers.
  - Disconnect / reconnect primary and secondary feeders.
  - Proper grounding connections.
  - Installation per manufacturer's guidelines.
  - Compliance with all state, local electric codes.

  The Scope of Work Excludes:

Upgrades, repairs, or additional work required to bring undisclosed or unforeseen electrical deficiencies up to current code.

City Hall / CCAE Complex - Central Plant

Lighting

- Retrofit identified interior T5 lighting systems with new high efficiency LED lighting systems. Please see the Lighting Summary in Attachment B for information on lighting scope, quantities, and locations. Occupancy sensors and/or dimming control, if provided, will be identified within the Lighting Summary.

- Retrofit identified exterior building mounted HID lighting systems with new high efficiency LED lighting systems. Please see the Lighting Summary in Attachment B for information on lighting scope, quantities, and locations.

Mechanical

- Replace two (2) 350-ton existing natural gas (NG) chillers with new electric high efficiency magnetic bearing chillers of similar size and capacity.

  The Scope of Work Includes:
  - Engineering design
  - Demolition, removal and disposal of the existing chillers. Disposal of refrigerant will be in conformance with EPA regulations.
  - Demolition of existing Heat Recovery system with piping capped at wall penetration.
  - Demolition of existing natural gas piping to wall penetration and capped.
  - New electrical connections, including electrical modifications and upgrades to supply required electrical service to operate the new chillers.
  - Insulate all new or exposed Chilled Water (CHW) piping affected by the installation of the new equipment.

- Connect to existing controls and implement programming and graphics.
- Start-up, testing of the new chillers. Commissioning to be part of building retro-commissioning scope.

The Scope of Work Excludes:

- Any CHW piping repair outside the central plant or not directly associated with scope.

- Replace one (1) existing 60-ton air cooled (DX) chiller with a high efficiency DX scroll chiller of similar capacity.

  Scope of Work Includes:
  - Engineering design.
  - Demolition, removal and disposal of the existing chiller and appurtenances. Disposal of refrigerant will be in conformance with EPA regulations.
  - Electrically reconnect new chiller, including electrical modifications as necessary to allow for proper operation of new chiller.
  - Piping reconfiguration and modifications as required for installation of the new chiller.
  - Insulate any new or exposed Chilled Water (CHW) piping affected by the installation of the new equipment.
  - Reconnect to existing controls and reprogram.
  - Start-up, testing of the new chillers. Commissioning to be part of building retro-commissioning scope.

  Scope of Work Excludes:
  - Any CHW piping repair outside the central plant or not directly associated with scope.

- Replace two (2) 375 GPM / 5HP, one (1) 130 GPM / 3HP, and one (1) 486 GPM / 3HP primary Chilled Water (CHW) pumps and two (2) 580 GPM / 40HP secondary CHW pumps with new high efficiency pumps of similar capacity.

  The Scope of Work Includes:
  - Engineering design.
  - Demolition, removal and disposal of the existing CHW pumps.
  - Electrical disconnect / reconnect.
  - Piping modifications as required.
  - Insulate any new or exposed Chilled Water (CHW) pipe affected by the installation of the new equipment.
  - New premium efficiency inverter duty motors.
  - Reconnect existing VFDs to each pump and program.
  - Balancing of CHW system.
  - Replenish / fill CHW loop to required volume.
  - Coordinate with City's Chemical Treatment contractor (at City's expense) to treat CHW loop prior to start up.

- Start-up, testing of the new pumps. Commissioning to be part of the building's retro-commissioning scope.

The Scope of Work Excludes:

- Draining or flushing of CHW loop

- Replace two (2) 985 GPM / 15HP and one (1) 486 GPM / 7.5HP Condenser Water (CW) pumps with new high efficiency pumps of similar capacity.

The Scope of Work Includes:

- Engineering design.
- Demolition, removal and disposal of the existing CW pumps.
- Electrical disconnect and reconnect.
- Piping modifications as required.
- Insulate any new or exposed Condenser Water (CW) pipe affected by the installation of the new equipment.
- New premium efficiency inverter duty motors.
- Reconnect existing VFD for each pump and program.
- Balancing of CW system.
- Replenish/fill CW loop to required volume.
- Coordinate with City's Chemical Treatment contractor (at City's expense) to treat CHW loop prior to start up.
- Start-up, testing the new pumps. Commissioning to be part of the building's retro-commissioning scope.

The Scope of Work Excludes:

- Draining or flushing of CW loop

- Replace two (2) 320 GPM / 15HP Heating Hot Water (HHW) pumps with new high efficiency HHW pumps of similar capacity.
  The Scope of Work Includes:
  - Engineering design
  - Demolition, removal and disposal of the existing HHW pumps.
  - Electrical disconnect and reconnect.
  - Piping modifications as required.
  - Insulate any new or exposed Heating Hot Water (HHW) pipe affected by the installation of the new equipment.
  - New premium efficiency motors.
  - Balancing of HHW system.
  - Replenish/fill HHW loop to required volume.

- Coordinate with City's Chemical Treatment contractor (at City's expense) to treat CHW loop prior to start up.
- Start-up, testing the new pumps. Commissioning to be part of the building's retro-commissioning scope.

The Scope of Work Excludes:

- Draining or flushing of HHW loop.

- Install one (1) new 1,900 MBH 84% efficiency, conventional natural gas-fired, force draft boiler on upper deck of central plant.

  Scope of Work Includes:

  - Engineering design.
  - Installation of new boiler.
  - Installation of new concrete equipment pad.
  - Installation of new electrical circuit and natural gas pipe per engineers' design.
  - New piping from existing HHW loop to new boiler.
  - Insulation of any new or exposed HHW pipe affected by the installation of the new equipment.
  - Installation of new flue.
  - Installation of circulation pump per engineer's design.
  - Start-up and testing.

  Scope of Work Excludes:

  - Any HHW piping repair outside the central plant or not directly associated with scope.

- Refurbish three (3) existing cooling towers.

  Scope of Work Includes:

  - Demolition of the Drift eliminators, fill media.
  - Removal of air inlet louvers.
  - Demolition of the fan motor, fan assembly, shaft kit w/bearings.
  - Remove all sealant from interior seams.
  - Install new fan assembly, fan motor, shaft, sheaves and bearings.
  - Install new fill media and drift eliminators.
  - Clean and inspect the hot water distribution system. Replace any damaged nozzles.
  - Install new louver media.
  - Apply a new sealant bead with ACT double sealer process on all interior casing seams.
  - Install a new float valve assembly.
  - Make minor adjustments as necessary to ensure proper operation of the system.
  - Coordinate with City's Chemical Treatment contractor (at City's expense) to treat CW loop prior to start up.

- Start-up and testing of the refurbished cooling towers. Commissioning to be part of the building's retro-commissioning scope.

Scope of Work Excludes:

- Replacement of cooling tower basins

RCx Study and Implementation

- Perform Retro-commission (RCx) study and report to systematically identify, document, and recommend operational measures with the intent of improving building performance and optimizing the building's HVAC and Controls systems.
  The Retro-commissioning process will include testing and measuring the plant's water, and control systems in their current operating condition. Measures requiring capital improvements may be identified and recommended through the process.

Transformers

- Replace one (1) existing transformer with a new equal capacity high efficiency transformer. The new transformer will be of the same electrical configuration and be placed in the same location and fit within existing constraints as the existing transformer.
  The Scope of Work Includes:
  - Remove and dispose of existing transformer.
  - Installation of new dry type, low loss, high efficiency transformer.
  - Disconnect / reconnect primary and secondary feeders.
  - Proper grounding connections.
  - Installation per manufacturer's guidelines.
  - Compliance with all state, local electric codes.

  The Scope of Work Excludes:
  - Upgrades, repairs, or additional work required to bring undisclosed or unforeseen electrical deficiencies up to current code.

Power Resiliency / Back Up Power

- Provide and install one (1) new permanently connected backup generator to provide automatic emergency backup power to the Central Plant.

  The Scope of Work includes:
  - Provide and install one (1) new 1000kW natural gas generator. Exact location to be determined during design with coordination from City. Assumed generator location will be within 180 ft of current location of MS1 & MS2 electric meter and within the gated area of the central plant parking area.
  - Provide and install one (1) new 1200 Amp and one (1) new 800 Amp 3-pole automatic transfer switch (ATS).
  - Provide and install necessary materials to connect the new generator and ATS to the main switchgear.
- Provide concrete pad for the new generator.
  - Provide new bollards as required.
  - Provide and install new natural gas piping from the generator to the existing natural gas service.
  - Start-up/testing of the new generator.
  - New generator and ATS specifications to be determined upon final engineering design.

  The Scope of Work excludes:
  - Undisclosed electrical and structural upgrades/modifications.

Renewables

Central Plant Meter #1

- Provide and install a new 123.1 kW_{DC} solar PV carport system in the parking lot adjacent to the central plant between Woodward Ave. & N. Escondido Blvd. Installation will include necessary engineering, labor, and equipment to connect the new PV system to the existing electrical meter(s). Please refer to Attachment D for additional details on scope, location, system sizing, and point(s) of interconnection.

  Scope of work includes:
  - Engineering, soil testing, construction, commissioning, and monitoring of the new PV system.
  - Removal, demolition, and haul away of (10) existing exterior light poles and (10) small sized trees that coincide with proposed carport-mounted solar PV system.
  - Installation of solar PV array on structural steel carports located in the large Woodward Ave. CCAE parking lot across the pedestrian bridge.
  - Installation of carport underside lighting.
  - Support to execute the utility interconnection agreement.
  - Installation of data acquisition system to provide system performance monitoring.

Scope of work excludes:

- Upgrades, repairs, parking lot restriping, ADA improvements, or additional work not associated with the solar PV Carport installation but required to bring existing undisclosed or unforeseen ADA and/or electrical deficiencies up to the current code.

Central Plant Meter #2

- Provide and install a new 272.1 kW_{DC} solar PV carport system in the parking lot adjacent to the central plant between Woodward Ave. & N. Escondido Blvd. Installation will include necessary engineering, labor, and equipment to connect the new PV system to the existing electrical meter(s). Please refer to Attachment D for additional details on scope, location, system sizing, and point(s) of interconnection.

  Scope of work includes:

  - Engineering, soil testing, construction, commissioning, and monitoring of the new PV system.
  - Removal, demolition, and haul away of (4) existing exterior light poles and (18) small sized trees that coincide with proposed carport-mounted solar PV system.
  - Installation of solar PV array on structural steel carports located in the large Woodward Ave. CCAE parking lot across the pedestrian bridge.
  - Installation of carport underside lighting.
  - Support to execute the utility interconnection agreement.
  - Installation of data acquisition system to provide system performance monitoring.

  Scope of work excludes:

  - Upgrades, repairs, parking lot restriping, ADA improvements, or additional work not associated with the solar PV Carport installation but required to bring existing undisclosed or unforeseen ADA and/or electrical deficiencies up to the current code.

California Center for the Arts Escondido (CCAE)

Lighting

- Retrofit identified interior T5, T8, CFL, HID, and LED lighting systems with new high efficiency LED lighting systems. Please see the Lighting Summary in Attachment B for information on lighting scope, quantities, and locations. Occupancy sensors and/or dimming control, if provided, will be identified within the Lighting Summary.

- Retrofit identified exterior building mounted T8 and CFL lighting systems with new high efficiency LED lighting systems. Please see the Lighting Summary in Attachment B for information on lighting scope, quantities, and locations.

Controls

- Replace existing pneumatically controlled valves and dampers with direct digital controls (DDC).

Location	AHU CHW Coil	AHU HHW Coil	VAV	VAV w/Reheat	Reheat Valves	Econ. Dampers
Arts Bldg.	2	0	12	10	4	6
Conference Ctr	2	1	0	16	0	6
Community Theater	7	3	0	28	1	12
Lyric Theater	6	2	59	58	13	18
Total Pneumatic Devices	**17**	**6**	**71**	**112**	**18**	**42**

The Scope of Work includes:

- Demolition of HHW, CHW, and reheat valves and pneumatic actuators associated with the buildings air handlers and reheat coils.
- Provide and Install new HHW, CHW, and Reheat valves with DDC actuators including wiring the DDC actuators to the local building automation controller or control device.
- Disconnect and remove the existing pneumatic actuators serving the VAV boxes and economizer dampers associated with the building's air handlers.
- Provide and Install new DDC actuators, to include wiring from the actuators to the local controller serving the VAV boxes and economizer dampers.
- Provide and install new DDC wirelessly communicating terminal control devices on the VAV boxes, to include wiring power to the controller.
- Re-insulate HHW/CHW supply & return piping where existing insulation has been damaged or removed as a result of the new valves.
- Disposal of air compressors
- Integration of new devices to buildings existing building automation system.
- Programming and graphics of new devices
- Perform functional testing and calibrate actuators.

The Scope of Work excludes:

- Electrical work beyond the scope of the control system replacement.
- Replacement of equipment not directly related to controls.

RCx and TAB Study and Implementation

- Perform a Retro-commission (RCx) study and report to systematically identify, document, and recommend operational measures with the intent of improving building performance and optimizing each building's HVAC and Controls systems.
  The Retro-commissioning process will include testing and measuring each building's air, water, and control systems in their current operating condition. Measures requiring capital improvements may be identified and recommended through the process.

- Test and Balance (TAB) A complete building TAB will be performed by a certified TAB contractor as part of the RCx process. The results of this analysis will be documented in a certified TAB report and utilized in assessing building operational and optimization measures identified through the RCx study.
    - Optimize existing control system by verifying control sequences, implementing energy saving strategies, modifying set points and updating schedules per the Standard of Operations and based on the retro-commissioning report.
    - Replacement of failed devices and equipment is not included.
    - A system deficiency list will be provided as part of this scope.
    - Climatec does not warrant the performance of the existing controls system.

Transformers

- Replace five (5) existing transformers with new equal capacity high efficiency transformers. The new transformers will be of the same electrical configuration and be placed in the same locations and fit within existing constraints as the existing transformers.
  The Scope of Work Includes:
    - Remove and dispose of existing transformers.
    - Installation of new dry type, low loss, high efficiency transformers.
    - Disconnect / reconnect primary and secondary feeders.
    - Proper grounding connections.
    - Installation per manufacturer's guidelines.
    - Compliance with all state, local electric codes.

  The Scope of Work Excludes:
    - Upgrades, repairs, or additional work required to bring undisclosed or unforeseen electrical deficiencies up to current code.

Roof Recoating

- Coat all existing built-up flat roof areas of each of the Performing Arts Building's with fluid applied roofing.

  Scope of Work Includes:
    - Preparation of existing built-up roof to include removal of dirt, debris, and gravel.
    - Pressure wash built-up roof surfaces to be coated.
    - Remove and reinstall counterflashing as needed.
    - Seal pipes, vents, and other roof equipment.
    - Cut blisters and seal as needed.
    - Apply silicone coating per manufacturer's guidelines to required thickness.
    - Reseal top of counterflashing as needed.

Scope of Work Excludes:

- Structural repairs.
- Repairs or coating of standing seam roof areas.
- Asbestos and/or lead abatement.

EV Charging

Concert Hall

- Provide and install three (3) dual-port and two (2) single-port Level 2 EV charging stations at the CCAE for public use. Final location of charging stations to be determined upon final engineering and ADA review.

The Scope of Work Includes:

- EV chargers will be installed in the CCAE parking lot off Woodward Ave.
- Provide and install three (3) dual-port and two (2) single-port EV charging station(s).
- Provide and install new electrical wiring and components, as necessary, to connect the EV charger to the existing power source.
- Install five (5) concrete bases to support the EV pedestals.
- Provide ADA stall restripes for (1) Van and (1) Standard ADA accessible EV charging stalls.
- Provide and install new bollards and/or wheel block and signage, as necessary for each EV parking stall.
- Concrete and/or site repairs to return work affected areas to "as-found" conditions.
- Start-up/testing of the new EV charger(s).

The Scope of Work excludes:

- Undisclosed electrical and structural upgrades/modifications.
- Upgrades, repairs, parking lot restriping, ADA improvements (unless mentioned), or additional work not associated with the EV Charger installation but required to bring existing undisclosed or unforeseen ADA and/or electrical deficiencies up to the current code.

Conference Center

- Provide and install one (1) dual-port and one (1) single-port Level 2 EV charging stations at CCAE for public use. Final location of charging stations to be determined upon final engineering and ADA review.

The Scope of Work Includes:

- EV chargers will be installed in the Conference Center Parking lot beneath the new solar PV carport.
- Provide and install one (1) dual-port and one (1) single-port EV charging station(s).
- Provide and install new electrical wiring and components, as necessary, to connect the EV charger to the existing power source.
- Install two (2) concrete bases to support the EV pedestals.

- Provide ADA stall restripes for (1) Van ADA accessible EV charging stall.
- Provide and install new bollards and/or wheel block and signage, as necessary for each EV parking stall.
- Concrete and/or site repairs to return work affected areas to "as-found" conditions.
- Start-up/testing of the new EV charger(s).

The Scope of Work excludes:

- Undisclosed electrical and structural upgrades/modifications.
- Upgrades, repairs, parking lot restriping, ADA improvements, or additional work not associated with the EV Charger installation but required to bring existing undisclosed or unforeseen ADA and/or electrical deficiencies up to the current code.

Renewables

Conference Center

- Provide and install a new 99.9 kW_{DC} solar PV carport system. Installation will include necessary engineering, labor, and equipment to connect the new PV system to the existing electrical meter(s). Please refer to Attachment D for additional details on scope, location, system sizing, and point(s) of interconnection.

Scope of work includes:

- Engineering, soil testing, construction, commissioning, and monitoring of the new PV system.
- Removal, demolition, and haul away of (2) existing exterior light poles that coincide with proposed carport-mounted solar PV system.
- Installation of solar PV array on structural steel carport over the parking island in the Conference Center parking lot.
- Installation of carport underside lighting.
- Support to execute the utility interconnection agreement.
- Installation of data acquisition system to provide system performance monitoring.
- Provide ADA stall restripe under proposed solar PV carport and path-of-travel (POT) linkage from said stall to nearest existing ADA POT.

Scope of work excludes:

- Upgrades, repairs, parking lot restriping, ADA improvements (unless mentioned), or additional work not associated with the solar PV Carport installation but required to bring existing undisclosed or unforeseen ADA and/or electrical deficiencies up to the current code.

Concert Hall

Provide and install a new 298.1 kW_{DC} solar PV carport system in the parking lot adjacent to the central plant between Woodward Ave. & N. Escondido Blvd. Installation will include necessary engineering, labor, and equipment to connect the new PV system to the existing electrical meter(s).

Please refer to Attachment D for additional details on scope, location, system sizing, and point(s) of interconnection. Scope of work includes:

- Engineering, soil testing, construction, commissioning, and monitoring of the new PV system.
- Removal, demolition, and haul away of (10) existing exterior light poles and (25) small sized trees that coincide with proposed carport-mounted solar PV system.
- Installation of solar PV array on structural steel carports located in the large Woodward Ave. CCAE parking lot across the pedestrian bridge.
- Installation of carport underside lighting.
- Support to execute the utility interconnection agreement.
- Installation of data acquisition system to provide system performance monitoring.

Scope of work excludes:

- Upgrades, repairs, parking lot restriping, ADA improvements, or additional work not associated with the solar PV Carport installation but required to bring existing undisclosed or unforeseen ADA and/or electrical deficiencies up to the current code.

Museum

- Provide and install a new 162.0 kW_{DC} solar PV carport system in the parking lot adjacent to the central plant between Woodward Ave. & N. Escondido Blvd. Installation will include necessary engineering, labor, and equipment to connect the new PV system to the existing electrical meter(s). Please refer to Attachment D for additional details on scope, location, system sizing, and point(s) of interconnection.

  Scope of work includes:

  - Engineering, soil testing, construction, commissioning, and monitoring of the new PV system.
  - Removal, demolition, and haul away of (1) existing exterior light poles and (11) small sized trees that coincide with proposed carport-mounted solar PV system.
  - Installation of solar PV array on structural steel carports located in the large Woodward Ave. CCAE parking lot across the pedestrian bridge.
  - Installation of carport underside lighting.
  - Support to execute the utility interconnection agreement.
  - Installation of data acquisition system to provide system performance monitoring.

  Scope of work excludes:

  - Upgrades, repairs, parking lot restriping, ADA improvements, or additional work not associated with the solar PV Carport installation but required to bring existing undisclosed or unforeseen ADA and/or electrical deficiencies up to the current code.

Theater

- Provide and install a new 136.0 kW_{DC} solar PV carport system in the parking lot adjacent to the central plant between Woodward Ave & N. Escondido Blvd. Installation will include necessary engineering, labor, and equipment to connect the new PV system to the existing electrical meter(s). Please refer to Attachment D for additional details on scope, location, system sizing, and point(s) of interconnection.

  Scope of work includes:

  - Engineering, soil testing, construction, commissioning, and monitoring of the new PV system.
  - Removal, demolition, and haul away of (3) existing exterior light poles and (9) small sized trees that coincide with proposed carport-mounted solar PV system.
  - Installation of solar PV array on structural steel carports located in the large Woodward Ave. CCAE parking lot across the pedestrian bridge.
  - Installation of carport underside lighting.
  - Support to execute the utility interconnection agreement.
  - Installation of data acquisition system to provide system performance monitoring.

  Scope of work excludes:

  - Upgrades, repairs, parking lot restriping, ADA improvements, or additional work not associated with the solar PV Carport installation but required to bring existing undisclosed or unforeseen ADA and/or electrical deficiencies up to the current code.

City Hall

Lighting

- Retrofit identified interior T8, CFL, and LED lighting systems with new high efficiency LED lighting systems. Please see the Lighting Summary in Attachment B for information on lighting scope, quantities, and locations. Occupancy sensors and/or dimming control, if provided, will be identified within the Lighting Summary.

- Retrofit identified exterior building mounted T8, CFL, and HID lighting systems with new high efficiency LED lighting systems. Please see the Lighting Summary in Attachment B for information on lighting scope, quantities, and locations.

Mechanical

- Replace two (2) existing mini split heat pump units with new high efficiency units of similar size and capacity of previous units. Please refer to the Mechanical Replacement Inventory for equipment size and location.

The Scope of Work Includes:

- Removal and proper disposal of existing units.

- Proper containment and disposal of refrigerant per EPA guidelines.
- Installation of new units.
- Flush and reconnect existing line set and pressure test.
- Disconnection/reconnection of the existing electrical service.
- Installation of new electrical disconnects.
- Condensate connections.
- Start-up/testing of the new units and connection to the existing building automation system

The Scope of Work Excludes:

- Undisclosed electrical and structural upgrades/modifications.
- Roofing repairs not directly related to the scope of mechanical work.
- Any required programming or system upgrades to the existing fire alarm system.

- Replace one (1) existing packaged heat pump serving the City Hall server room with a new high efficiency unit of similar size and capacity of the previous unit. Please refer to the Mechanical Replacement Inventory for equipment size and location.
  The Scope of Work Includes:
  - Removal and proper disposal of existing unit.
  - Proper containment and disposal of refrigerant per EPA guidelines.
  - Installation of new unit.
  - Curb modifications, rigging, setting new unit onto roof curb as necessary.
  - Disconnection/reconnection of the existing electrical service.
  - Installation of new electrical disconnects.
  - Duct modifications as needed for proper fit.
  - Condensate connections.
  - Start-up/testing of the new unit and connection to the existing building automation system.

  The Scope of Work Excludes:
  - Undisclosed electrical and structural upgrades/modifications.
  - Roofing repairs not directly related to the scope of mechanical work.
  - Duct repairs not directly related to the scope of work.
  - Any required programming or system upgrades to the existing fire alarm system.

- Replace one (1) existing 40-ton air cooled (DX) chiller with a high efficiency DX scroll chiller of similar capacity.
  Scope of Work Includes:
  - Engineering design
  - Demolition, removal and disposal of the existing chiller. Disposal of refrigerant will be in conformance with EPA regulations.

- Electrical disconnect / reconnect new chiller, including electrical modifications to allow proper operation of new chiller.
- Piping reconfiguration and modifications as required for installation of the new chiller
- Insulate any new or exposed Chilled Water (CHW) piping affected by the installation of the new equipment.
- Reconnect to existing controls.
- Start-up, testing of the new chillers. Commissioning to be part of building retro-commissioning scope.

Scope of Work Excludes:

- Any CHW piping repair outside the central plant or not directly associated with scope.

Controls

- Replace existing pneumatically controlled valves and dampers with direct digital controls (DDC).

Location	AHUs CHW Coil	AHUs HHW Coil	VAV	Econ. Dampers
City Hall	8	8	8	24
Total Pneumatic Devices	**8**	**8**	**8**	**24**

The Scope of Work includes:

- Demolition of HHW, CHW, and pneumatic actuators associated with the buildings air handlers
- Provide and Install new HHW and CHW valves with DDC actuators including wiring the DDC actuators to the local building automation controller.
- Disconnect and remove the existing pneumatic actuators serving the existing VAV boxes and economizer dampers associated with the building's air handlers.
- Provide and Install new DDC actuators, to include wiring from the actuators to the local controller serving the VAV boxes and economizer dampers.
- Provide and install new DDC wirelessly communicating terminal control devices on the VAV boxes, to include wiring power to the controller.
- Re-insulate HHW/CHW supply & return piping where existing insulation has been damaged or removed as a result of the new valves.
- Disposal of air compressors
- Integration of new devices to buildings existing building automation system.
- Programming and graphics of new devices
- Perform functional testing and calibrate actuators.

The Scope of Work excludes:

- Electrical work beyond the scope of the control system replacement.
- Replacement of equipment not directly related to controls.

RCx and TAB Study and Implementation

- Perform a Retro-commission (RCx) study and report to systematically identify, document, and recommend operational measures with the intent of improving building performance and optimizing each building's HVAC and Controls systems.
  The Retro-commissioning process will include testing and measuring each building's air, water, and control systems in their current operating condition. Measures requiring capital improvements may be identified and recommended through the process.

- Test and Balance (TAB) A complete building TAB will be performed by a certified TAB contractor as part of the RCx process. The results of this analysis will be documented in a certified TAB report and utilized in assessing building operational and optimization measures identified through the RCx study.
  - Optimize existing control system by verifying control sequences, implementing energy saving strategies, modifying set points and updating schedules per the Standard of Operations and based on the retro-commissioning report.
  - Replacement of failed devices and equipment is not included.
  - A system deficiency list will be provided as part of this scope.
  - Climatec does not warrant the performance of the existing controls system

Transformers

- Replace six (6) existing transformers with new equal capacity high efficiency transformers. The new transformers will be of the same electrical configuration and be placed in the same locations and fit within existing constraints as the existing transformers.
  The Scope of Work Includes:
  - Remove and dispose of existing transformers.
  - Installation of new dry type, low loss, high efficiency transformers.
  - Disconnect / reconnect primary and secondary feeders.
  - Proper grounding connections.
  - Installation per manufacturer's guidelines.
  - Compliance with all state, local electric codes.

  The Scope of Work Excludes:
  - Upgrades, repairs, or additional work required to bring undisclosed or unforeseen electrical deficiencies up to current code.

Power Resiliency / Back Up Powers

- Provide and install one (1) new permanently connected 130kW backup generator with 600A automatic transfer switch (ATS) to provide automatic emergency backup power to the council chambers side of the building.

  The Scope of Work includes:

- Provide and install one (1) new 130kW natural gas generator in the southwest corner of the east parking lot near the existing switchgear.
- Provide and install one (1) new 600Amp 3-pole automatic transfer switch (ATS).
- Provide and install necessary materials to connect the new generator and ATS to the main switchboard.
- Provide concrete pad for the new generator.
- Provide new bollards as required.
- Provide and install new natural gas piping to connect the generator to the existing natural gas service.
- Start-up/testing of the new generator.
- New generator and ATS specifications to be determined upon final engineering design.

The Scope of Work excludes:

- Undisclosed electrical and structural upgrades/modifications.

- Replace one (1) existing permanently connected 400kW backup generator with 1600A automatic transfer switch (ATS) to provide automatic emergency backup power to the administrative side of the building.

  The Scope of Work includes:

  - Demolition and disposal of the existing 400kW generator and ATS.
  - Provide and install one (1) new 400kW natural gas generator in the current location of the existing generator.
  - Provide and install one (1) new 1600Amp 3-pole automatic transfer switch (ATS).
  - Provide and install necessary materials to connect the new generator and ATS to the main switchboard.
  - Reuse existing concrete pad for the new generator.
  - Reconnect natural gas piping to generator.
  - Start-up/testing of the new generator.
  - New generator and ATS specifications to be determined upon final engineering design.

  The Scope of Work excludes:

  - Undisclosed electrical and structural upgrades/modifications.

EV Charging

- Provide and install two (2) dual-port and one (1) single-port Level 2 EV charging stations at City Hall, for use with fleet, or authorized electrical vehicles only. Final location of charging stations to be determined upon final engineering and ADA review.

  The Scope of Work Includes:

  - EV chargers will be installed in northeast City Hall service lot.
  - Provide and install two (2) dual-port and one (1) single-port EV charging station(s).

- Provide and install new electrical wiring and components, as necessary, to connect the EV charger to the existing power source.
- Install three (3) concrete bases to support the EV pedestals.
- Provide ADA stall restripes for (1) Van Accessible ADA accessible EV charging stall.
- Provide and install new bollards and/or wheel block and signage, as necessary for each EV parking stall.
- Concrete and/or site repairs to return work affected areas to "as-found" conditions.
- Start-up/testing of the new EV charger(s).

The Scope of Work excludes:

- Undisclosed electrical and structural upgrades/modifications.
- Upgrades, repairs, parking lot restriping, ADA improvements (unless mentioned), or additional work not associated with the EV Charger installation but required to bring existing undisclosed or unforeseen ADA and/or electrical deficiencies up to the current code.

Renewables

- Provide and install a new 346.7 kW_{DC} solar PV carport system in the parking lot adjacent to the central plant between Woodward Ave. and N. Escondido Blvd. Installation will include necessary engineering, labor, and equipment to connect the new PV system to the existing electrical meter(s). Please refer to Attachment D for additional details on scope, location, system sizing, and point(s) of interconnection.

  Scope of work includes:

  - Engineering, soil testing, construction, commissioning, and monitoring of the new PV system.
  - Removal, demolition, and haul away of (3) existing exterior light poles and (25) small sized trees that coincide with proposed carport-mounted solar PV system.
  - Installation of solar PV array on structural steel carports located in the large Woodward Ave. CCAE parking lot across the pedestrian bridge.
  - Installation of carport underside lighting.
  - Support to execute the utility interconnection agreement.
  - Installation of data acquisition system to provide system performance monitoring.

  Scope of work excludes:

  - Upgrades, repairs, parking lot restriping, ADA improvements, or additional work not associated with the solar PV Carport installation but required to bring existing undisclosed or unforeseen ADA and/or electrical deficiencies up to the current code.

Daley Ranch Maintenance Facility

Lighting

- Retrofit identified interior T8 lighting systems with new high efficiency LED lighting systems. Please see the Lighting Summary in Attachment B for information on lighting scope, quantities, and locations. Occupancy sensors and/or dimming control, if provided, will be identified within the Lighting Summary.

Daley Ranch Historic House

Controls

- Provide and install one (1) new Wi-Fi smart thermostat w/ CO2 monitoring.

  The Scope of Work includes:
  - Disconnect and remove the existing thermostat.
  - Install new locally mounted Wi-Fi smart thermostat to allow for local control and override capabilities within a pre-programmed range.
  - Programming and checkout.

  The Scope of Work excludes:
  - Any required upgrades or improvements to the existing network.
  - Controls for existing evaporative cooling units, heating only units, ductless split system units, and window AC units.

Dixon Lake Cottage Rental

Mechanical

- Replace one (1) split-system heat pump with a new high efficiency unit of similar size and capacity of the previous unit. Please refer to the Mechanical Replacement Inventory for equipment size and location.
  The Scope of Work Includes:
  - Removal and proper disposal of existing unit.
  - Proper containment and disposal of refrigerant per EPA guidelines.
  - Installation of new unit.
  - Flush and reconnect existing line set and pressure test.
  - Disconnection/reconnection of the existing electrical service.
  - Installation of new electrical disconnects.
  - Condensate connections.
  - Start-up/testing of the new unit and connection to the new Wi-Fi smart thermostat network.

  The Scope of Work Excludes:
  - Undisclosed electrical and structural upgrades/modifications.
  - Duct repair and air balancing.
  - Roofing repairs not directly related to the scope of mechanical work.

Controls

- Provide and install one (1) new Wi-Fi smart thermostat w/ CO2 monitoring.

  The Scope of Work includes:
  - Disconnect and remove the existing thermostat.
  - Install new locally mounted Wi-Fi smart thermostat to allow for local control and override capabilities within a pre-programmed range.
  - Programming and checkout.

  The Scope of Work excludes:
  - Any required upgrades or improvements to the existing network.
  - Controls for existing evaporative cooling units, heating only units, ductless split system units, and window AC units.

Don E. Anderson Building

Mechanical

- Replace two (2) existing packaged heat pumps with new high efficiency units of similar size and capacity of previous units. Please refer to the Mechanical Replacement Inventory for equipment size and location.
  The Scope of Work Includes:
  - Removal and proper disposal of existing units.
  - Proper containment and disposal of refrigerant per EPA guidelines.
  - Installation of new units.
  - Curb modifications, rigging, setting new units onto roof curb as necessary.
  - Disconnection/reconnection of the existing electrical service.
  - Installation of new electrical disconnects.
  - Condensate connections.
  - Start-up/testing of the new units and connection to the new Wi-Fi smart thermostat network.

  The Scope of Work Excludes:
  - Undisclosed electrical and structural upgrades/modifications.
  - Roofing repairs not directly related to the scope of mechanical work.
  - Duct repair and air balancing.

Controls

- Provide and install two (2) new Wi-Fi smart thermostats w/ CO2 monitoring.

  The Scope of Work includes:
  - Disconnect and remove the existing thermostats.

- Install new locally mounted Wi-Fi smart thermostats to allow for local control and override capabilities within a pre-programmed range.
- Programming and checkout.

The Scope of Work excludes:

- Any required upgrades or improvements to the existing network.
- Controls for existing evaporative cooling units, heating only units, ductless split system units, and window AC units.

Roof Recoating

- Coat existing built-up flat roof area of the Don E. Anderson building with fluid applied roofing.

Scope of Work Includes:

- Preparation of existing built-up roof to include removal of dirt, debris, and gravel.
- Pressure wash built-up roof surfaces to be coated.
- Remove and reinstall counterflashing as needed.
- Seal pipes, vents, and other roof equipment.
- Cut blisters and seal as needed.
- Apply silicone coating per manufacturer's guidelines to required thickness.
- Reseal top of counterflashing as needed.

Scope of Work Excludes:

- Structural repairs.
- Asbestos and/or lead abatement.

East Valley Community Center (EVCC)

Lighting

- Retrofit identified interior T8 and CFL lighting systems with new high efficiency LED lighting systems. Please see the Lighting Summary in Attachment B for information on lighting scope, quantities, and locations. Occupancy sensors and/or dimming control, if provided, will be identified within the Lighting Summary.

- Retrofit identified exterior building mounted CFL lighting systems with new high efficiency LED lighting systems. Please see the Lighting Summary in Attachment B for information on lighting scope, quantities, and locations.

Mechanical

- Replace five (5) existing packaged gas / electric units with new high efficiency packaged heat pump units of similar size and capacity of previous units. Please refer to the Mechanical Replacement Inventory for equipment size and location.

  The Scope of Work Includes:

  - Removal and proper disposal of existing units.
  - Proper containment and disposal of refrigerant per EPA guidelines.
  - Installation of new units.
  - Curb modifications, rigging, setting new units onto roof curb as necessary.
  - Disconnection/reconnection of the existing electrical service.
  - Installation of new electrical disconnects.
  - Cap existing gas lines.
  - Condensate connections.
  - Start-up/testing of the new units and connection to the new Wi-Fi smart thermostat network.

  The Scope of Work Excludes:

  - Undisclosed electrical and structural upgrades/modifications.
  - Roofing repairs not directly related to the scope of mechanical work.
  - Any required programming or system upgrades to the existing fire alarm system.
  - Duct repair and air balancing

Controls

- Replace existing Honeywell building automation controls serving the building's rooftop packaged units.

  Scope of Work Includes

  - Removal and disposal of existing temperature sensors and terminal unit controllers.
  - Installation of new Honeywell temperature sensors with display, CO2 sensor, and temperature adjustment capability.
  - Installation of new terminal unit controllers and all required hardware for proper operation and communication of new building automation controls to the City's existing Building Automation System (BAS).
  - Integration of CO2 sensors for demand control ventilation.
  - Reconnect existing wires to communication system.
  - Integration and programming of all new controllers into the City's existing BAS.
  - Start-up and testing of the new controls.

  Scope of Work Excludes:

  - Installation of controls on any equipment not currently controlled by the existing BAS system.

Power Resiliency / Back Up Power

- Provide and install one (1) new permanently connected 150kW backup generator with 1600A automatic transfer switch (ATS) to provide automatic emergency backup power to the building.

  The Scope of Work includes:
  - Provide and install one (1) new 150kW natural gas generator in the north parking lot between the EVCC and Heritage Academy near the existing switchgear.
  - Provide and install one (1) new 1600Amp 3-pole automatic transfer switch (ATS).
  - Provide and install necessary materials to connect the new generator and ATS to the main switchboard.
  - Provide concrete pad for the new generator.
  - Provide new bollards as required.
  - Provide and install new natural gas piping to connect the generator to the existing natural gas service.
  - Start-up/testing of the new generator.
  - New generator and ATS specifications to be determined upon final engineering design.

  The Scope of Work excludes:
  - Undisclosed electrical and structural upgrades/modifications.

Roof Repairs

- Repair existing roofing system on EVCC
  Scope of Work Includes:
  - Patch holes on TPO roofing membrane.
  - Replace missing shingles on parapet walls.
  - Seal as needed.

  Scope of Work Excludes:
  - Any major structural repairs.
  - Asbestos and/or lead abatement.
  - Roof replacement

Fire Station 1

Lighting

- Retrofit identified interior T8, CFL, incandescent, HID, and LED lighting systems with new high efficiency LED lighting systems. Please see the Lighting Summary in Attachment B for information on lighting scope, quantities, and locations. Occupancy sensors and/or dimming control, if provided, will be identified within the Lighting Summary.

- Retrofit identified exterior building and pole mounted T8, CFL, incandescent, and HID lighting systems with new high efficiency LED lighting systems. Please see the Lighting Summary in Attachment B for information on lighting scope, quantities, and locations.

Mechanical

- Replace eight (8) existing packaged gas / electric units with new high efficiency packaged heat pump units of similar size and capacity of previous units. Please refer to the Mechanical Replacement Inventory for equipment size and location.
  The Scope of Work Includes:
  - Removal and proper disposal of existing units.
  - Proper containment and disposal of refrigerant per EPA guidelines.
  - Installation of new units.
  - Curb modifications, rigging, setting new units onto roof curb as necessary.
  - Disconnection/reconnection of the existing electrical service.
  - Installation of new electrical disconnects.
  - What about existing gas lines? This comment is for all gas heating systems being replaced with heat pump units.
  - Condensate connections.
  - Cap existing gas lines.
  - Start-up/testing of the new units and connection to the new Wi-Fi smart thermostat network.

  The Scope of Work Excludes:
  - Undisclosed electrical and structural upgrades/modifications.
  - Roofing repairs not directly related to the scope of mechanical work.
  - Any required programming or system upgrades to the existing fire alarm system.
  - Duct repair and air balancing

Fire Station 2

Lighting

- Retrofit identified interior T8, CFL, incandescent, and LED lighting systems with new high efficiency LED lighting systems. Please see the Lighting Summary in Attachment B for information on lighting scope, quantities, and locations. Occupancy sensors and/or dimming control, if provided, will be identified within the Lighting Summary.

- Retrofit identified exterior building and pole mounted T8, CFL, and HID lighting systems with new high efficiency LED lighting systems. Please see the Lighting Summary in Attachment B for information on lighting scope, quantities, and locations.

Mechanical

- Replace four (4) split-system furnaces with new high efficiency split-system heat pump units of similar size and capacity of previous units. Please refer to the Mechanical Replacement Inventory for equipment size and location.
  The Scope of Work Includes:
  - Removal and proper disposal of existing units.
  - Proper containment and disposal of refrigerant per EPA guidelines.
  - Installation of new units.
  - Flush and reconnect existing line set and pressure test.
  - Disconnection/reconnection of the existing electrical service.
  - Installation of new electrical disconnects.
  - Condensate connections.
  - Cap existing gas lines.
  - Start-up/testing of the new units and connection to the new Wi-Fi smart thermostat network.

  The Scope of Work Excludes:
  - Undisclosed electrical and structural upgrades/modifications.
  - Roofing repairs not directly related to the scope of mechanical work.
  - Any required programming or system upgrades to the existing fire alarm system.
  - Duct repair and air balancing.

- Replace one (1) split-system heat pump with new high efficiency unit of similar size and capacity of previous unit. Please refer to the Mechanical Replacement Inventory for equipment size and location.
  The Scope of Work Includes:
  - Removal and proper disposal of existing unit.
  - Proper containment and disposal of refrigerant per EPA guidelines.
  - Installation of new unit.
  - Flush and reconnect existing line set and pressure test.
  - Disconnection/reconnection of the existing electrical service.
  - Installation of new electrical disconnects.
  - Condensate connections.
  - Start-up/testing of the new unit and connection to the new Wi-Fi smart thermostat network.

  The Scope of Work Excludes:
  - Undisclosed electrical and structural upgrades/modifications.
  - Roofing repairs not directly related to the scope of mechanical work.
  - Any required programming or system upgrades to the existing fire alarm system.
  - Duct repair and air balancing.

Fire Station 3

Lighting

- Retrofit identified interior T8, CFL, HID, and LED lighting systems with new high efficiency LED lighting systems. Please see the Lighting Summary in Attachment B for information on lighting scope, quantities, and locations. Occupancy sensors and/or dimming control, if provided, will be identified within the Lighting Summary.

- Retrofit identified exterior building and pole mounted T8, CFL, HID, and LED lighting systems with new high efficiency LED lighting systems. Please see the Lighting Summary in Attachment B for information on lighting scope, quantities, and locations.

Mechanical

- Replace five (5) existing packaged gas / electric units with new high efficiency packaged heat pump units of similar size and capacity of previous units. Please refer to the Mechanical Replacement Inventory for equipment size and location.
  The Scope of Work Includes:
  - Removal and proper disposal of existing units.
  - Proper containment and disposal of refrigerant per EPA guidelines.
  - Installation of new units.
  - Curb modifications, rigging, setting new units onto roof curb as necessary.
  - Disconnection/reconnection of the existing electrical service.
  - Installation of new electrical disconnects.
  - Condensate connections.
  - Cap existing gas lines.
  - Start-up/testing of the new units and connection to the new Wi-Fi smart thermostat network.

  The Scope of Work Excludes:
  - Undisclosed electrical and structural upgrades/modifications.
  - Roofing repairs not directly related to the scope of mechanical work.
  - Any required programming or system upgrades to the existing fire alarm system.
  - Duct repair and air balancing

Fire Station 4

Lighting

- Retrofit identified interior T8 and CFL lighting systems with new high efficiency LED lighting systems. Please see the Lighting Summary in Attachment B for information on lighting scope, quantities, and locations. Occupancy sensors and/or dimming control, if provided, will be identified within the Lighting Summary.

- Retrofit identified exterior building and pole mounted T8, CFL, and HID lighting systems with new high efficiency LED lighting systems. Please see the Lighting Summary in Attachment B for information on lighting scope, quantities, and locations.

Fire Station 5

Lighting

- Retrofit identified interior T8 and CFL lighting systems with new high efficiency LED lighting systems. Please see the Lighting Summary in Attachment B for information on lighting scope, quantities, and locations. Occupancy sensors and/or dimming control, if provided, will be identified within the Lighting Summary.

- Retrofit identified exterior building and pole mounted T8, CFL, and HID lighting systems with new high efficiency LED lighting systems. Please see the Lighting Summary in Attachment B for information on lighting scope, quantities, and locations.

Mechanical

- Replace three (3) split-system furnaces with new high efficiency split-system heat pump units of similar size and capacity of previous units. Please refer to the Mechanical Replacement Inventory for equipment size and location.
  The Scope of Work Includes:
  - Removal and proper disposal of existing units.
  - Proper containment and disposal of refrigerant per EPA guidelines.
  - Installation of new units.
  - Flush and reconnect existing line set and pressure test.
  - Disconnection/reconnection of the existing electrical service.
  - Installation of new electrical disconnects.
  - Condensate connections.
  - Cap existing gas lines.
  - Start-up/testing of the new units and connection to the new Wi-Fi smart thermostat network.

  The Scope of Work Excludes:
  - Undisclosed electrical and structural upgrades/modifications.
  - Roofing repairs not directly related to the scope of mechanical work.
  - Any required programming or system upgrades to the existing fire alarm system.
  - Duct repair and air balancing.

- Replace one (1) split-system heat pump with new high efficiency unit of similar size and capacity of previous unit. Please refer to the Mechanical Replacement Inventory for equipment size and location.
  The Scope of Work Includes:
  - Removal and proper disposal of existing unit.

- Proper containment and disposal of refrigerant per EPA guidelines.
- Installation of new unit.
- Flush and reconnect existing line set and pressure test.
- Disconnection/reconnection of the existing electrical service.
- Installation of new electrical disconnects.
- Condensate connections.
- Start-up/testing of the new unit and connection to the new Wi-Fi smart thermostat network.

The Scope of Work Excludes:

- Undisclosed electrical and structural upgrades/modifications.
- Roofing repairs not directly related to the scope of mechanical work.
- Any required programming or system upgrades to the existing fire alarm system.
- Duct repair and air balancing

Fire Station 6

Lighting

- Retrofit identified interior T8, CFL, incandescent, and LED lighting systems with new high efficiency LED lighting systems. Please see the Lighting Summary in Attachment B for information on lighting scope, quantities, and locations. Occupancy sensors and/or dimming control, if provided, will be identified within the Lighting Summary.

- Retrofit identified exterior building and pole mounted T8, CFL, and HID lighting systems with new high efficiency LED lighting systems. Please see the Lighting Summary in Attachment B for information on lighting scope, quantities, and locations.

Mechanical

- Replace four (4) existing packaged gas / electric units with new high efficiency packaged heat pump units of similar size and capacity of previous units. Please refer to the Mechanical Replacement Inventory for equipment size and location.
  The Scope of Work Includes:
  - Removal and proper disposal of existing units.
  - Proper containment and disposal of refrigerant per EPA guidelines.
  - Installation of new units.
  - Curb modifications, rigging, setting new units onto roof curb as necessary.
  - Disconnection/reconnection of the existing electrical service.
  - Installation of new electrical disconnects.
  - Condensate connections.
  - Cap existing gas lines.
  - Start-up/testing of the new units and connection to the new Wi-Fi smart thermostat network.

The Scope of Work Excludes:

- Undisclosed electrical and structural upgrades/modifications.
- Roofing repairs not directly related to the scope of mechanical work.
- Any required programming or system upgrades to the existing fire alarm system.
- Duct repair and air balancing

Fire Station 7

Lighting

- Retrofit identified interior T8 and CFL lighting systems with new high efficiency LED lighting systems. Please see the Lighting Summary in Attachment B for information on lighting scope, quantities, and locations. Occupancy sensors and/or dimming control, if provided, will be identified within the Lighting Summary.

- Retrofit identified exterior building and pole mounted T8, CFL, and HID lighting systems with new high efficiency LED lighting systems. Please see the Lighting Summary in Attachment B for information on lighting scope, quantities, and locations.

Mechanical

- Replace five (5) packaged gas / electric units with new high efficiency packaged heat pump units of similar size and capacity of previous units. Please refer to the Mechanical Replacement Inventory for equipment size and location.
  The Scope of Work Includes:
  - Removal and proper disposal of existing units.
  - Proper containment and disposal of refrigerant per EPA guidelines.
  - Installation of new units.
  - Curb modifications, rigging, setting new units onto roof curb as necessary.
  - Disconnection/reconnection of the existing electrical service.
  - Installation of new electrical disconnects.
  - Condensate connections.
  - Cap existing gas lines.
  - Start-up/testing of the new units and connection to the new Wi-Fi smart thermostat network.

  The Scope of Work Excludes:
  - Undisclosed electrical and structural upgrades/modifications.
  - Roofing repairs not directly related to the scope of mechanical work.
  - Any required programming or system upgrades to the existing fire alarm system.
  - Duct repair and air balancing

Grape Day Park

Lighting

- Retrofit identified exterior pole mounted HID lighting systems with new high efficiency LED lighting systems. Please see the Lighting Summary in Attachment B for information on lighting scope, quantities, and locations.

Grape Day Park Historical Sites

Controls

- Provide and install four (4) new Wi-Fi smart thermostats w/ CO2 monitoring.

  The Scope of Work includes:
  - Disconnect and remove the existing thermostats.
  - Install new locally mounted Wi-Fi smart thermostats to allow for local control and override capabilities within a pre-programmed range.
  - Programming and checkout.

  The Scope of Work excludes:
  - Any required upgrades or improvements to the existing network.
  - Controls for existing evaporative cooling units, heating only units, ductless split system units, and window AC units.

Mechanical

- Replace one (1) split-system furnace with new high efficiency split-system heat pump unit of similar size and capacity of previous unit. Please refer to the Mechanical Replacement Inventory for equipment size and location.
  The Scope of Work Includes:
  - Removal and proper disposal of existing unit.
  - Proper containment and disposal of refrigerant per EPA guidelines.
  - Installation of new unit.
  - Flush and reconnect existing line set and pressure test.
  - Disconnection/reconnection of the existing electrical service.
  - Installation of new electrical disconnects.
  - Condensate connections.
  - Cap existing gas lines.
  - Start-up/testing of the new unit and connection to the new Wi-Fi smart thermostat network.

The Scope of Work Excludes:

- Undisclosed electrical and structural upgrades/modifications.
- Roofing repairs not directly related to the scope of mechanical work.
- Any required programming or system upgrades to the existing fire alarm system.
- Duct repair and air balancing

Grove Park

EV Charging

- Provide and install two (2) dual-port and one (1) single-port Level 2 EV charging stations at Grove Park for public use. Final location of charging stations to be determined upon final engineering and ADA review.

The Scope of Work Includes:

- EV chargers will be installed in east parking lot located off Ash St.
- Provide and install two (2) dual-port and one (1) single-port EV charging station(s).
- Provide and install new electrical wiring and components, as necessary, to connect the EV charger to the existing power source.
- Install three (3) concrete bases to support the EV pedestals.
- Provide ADA stall restripes for (1) Van Accessible ADA accessible EV charging stall.
- Provide and install new bollards and/or wheel block and signage, as necessary for each EV parking stall.
- Concrete and/or site repairs to return work affected areas to "as-found" conditions.
- Start-up/testing of the new EV charger(s).

The Scope of Work excludes:

- Undisclosed electrical and structural upgrades/modifications.
- Upgrades, repairs, parking lot restriping, ADA improvements (unless mentioned), or additional work not associated with the EV Charger installation but required to bring existing undisclosed or unforeseen ADA and/or electrical deficiencies up to the current code.

Jesmond Dene Park

EV Charging

- Provide and install two (2) dual-port and one (1) single-port Level 2 EV charging stations at Jesmond Dene Park for public use. Final location of charging stations to be determined upon final engineering and ADA review.

The Scope of Work Includes:

- EV chargers will be installed in the northeast parking lot located near the baseball fields.
- Provide and install two (2) dual-port and one (1) single-port EV charging station(s).
- Provide and install new electrical wiring and components, as necessary, to connect the EV charger to the existing power source.

- Install three (3) concrete bases to support the EV pedestals.
- Provide ADA stall restripes for (1) Van Accessible ADA accessible EV charging stall.
- Provide and install new bollards and/or wheel block and signage, as necessary for each EV parking stall.
- Concrete and/or site repairs to return work affected areas to "as-found" conditions.
- Start-up/testing of the new EV charger(s).

The Scope of Work excludes:

- Undisclosed electrical and structural upgrades/modifications.
- Upgrades, repairs, parking lot restriping, ADA improvements (unless mentioned), or additional work not associated with the EV Charger installation but required to bring existing undisclosed or unforeseen ADA and/or electrical deficiencies up to the current code.

Lighting

- Retrofit identified interior T8 and LED lighting systems with new high efficiency LED lighting systems. Please see the Lighting Summary in Attachment B for information on lighting scope, quantities, and locations. Occupancy sensors and/or dimming control, if provided, will be identified within the Lighting Summary.

- Retrofit identified exterior building mounted T8 and HID lighting systems with new high efficiency LED lighting systems. Please see the Lighting Summary in Attachment B for information on lighting scope, quantities, and locations.

James Stone Pool

Renewables

- Provide and install a new 46.9 kW_{DC} solar PV carport system in the parking lot adjacent to the central plant between Woodward Ave. & N. Escondido Blvd. Installation will include necessary engineering, labor, and equipment to connect the new PV system to the existing electrical meter(s). Please refer to Attachment D for additional details on scope, location, system sizing, and point(s) of interconnection.

  Scope of work includes:

  - Engineering, soil testing, construction, commissioning, and monitoring of the new PV system.
  - Installation of solar PV array on structural steel carport over the single row of parking stalls just west, across the right-of-way from James Stone Pool.
  - Removal, demolition, and haul away of (2) existing exterior light pole and (5) small sized trees that coincide with proposed carport-mounted solar PV system.
  - Installation of carport underside lighting.
  - Support to execute the utility interconnection agreement.

- Installation of data acquisition system to provide system performance monitoring.

Scope of work excludes:

- Upgrades, repairs, parking lot restriping, ADA improvements, or additional work not associated with the solar PV Carport installation but required to bring existing undisclosed or unforeseen ADA and/or electrical deficiencies up to the current code.

Kit Carson Park

Lighting

- Retrofit identified interior T8, T12, CFL, and incandescent lighting systems with new high efficiency LED lighting systems. Please see the Lighting Summary in Attachment B for information on lighting scope, quantities, and locations. Occupancy sensors and/or dimming control, if provided, will be identified within the Lighting Summary.

- Retrofit identified exterior building and pole mounted T8, CFL, and HID lighting systems with new high efficiency LED lighting systems. Please see the Lighting Summary in Attachment B for information on lighting scope, quantities, and locations.

- Retrofit identified HID sports field lighting systems with new high efficiency LED lighting systems at the Adult Softball Sports Field, Soccer Sports Field, Youth Baseball Sports Field, Youth Softball Sports Field, and Youth Sports Park. Please see the Lighting Summary in Attachment B for information on lighting scope, quantities, and locations.

  Scope of work includes:
  - Remove and dispose of existing HID sports field lighting fixtures.
  - Installation of the new LED sports field lighting fixtures with instant on capability and step controls onto existing poles.
  - Photometric analysis will be provided to the City prior to any material orders to ensure proper coverage of the sport area.
  - Proper directional control to prevent light trespass off property.
  - New control system with web access.
  - Required wiring and conduit to connect lighting and controls.
  - Assumption that existing sports field lighting support poles have been approved by the City for the use of supporting the existing sports field lighting systems.
  - Reuse of the existing sports field lighting support poles to affix the new lighting system.
  - Verification that existing field lighting poles will structurally support the new lighting system.
  - Manufacturer provided training to staff .
  - Manufacturer provided 10-year warranty.

  Scope of Work Excludes:
  - New electrical service or improvements to existing electrical infrastructure.
  - Any wiring or conduit between poles or panels to poles.

- New sports field lighting fixture support poles.
- Retroactive city approval / certification of existing sports field lighting poles.

Mechanical

- Replace one (1) split-system heat pump with a new high efficiency unit of similar size and capacity of the previous unit. Please refer to the Mechanical Replacement Inventory for equipment size and location.

  The Scope of Work Includes:

  - Removal and proper disposal of existing unit.
  - Proper containment and disposal of refrigerant per EPA guidelines.
  - Installation of new unit.
  - Flush and reconnect existing line set and pressure test.
  - Disconnection/reconnection of the existing electrical service.
  - Installation of new electrical disconnects.
  - Condensate connections.
  - Start-up/testing of the new unit and connection to the new Wi-Fi smart thermostat network.

  The Scope of Work Excludes:

  - Undisclosed electrical and structural upgrades/modifications.
  - Roofing repairs not directly related to the scope of mechanical work.
  - Any required programming or system upgrades to the existing fire alarm system.
  - Duct repair and air balancing.

Controls

- Provide and install two (2) new Wi-Fi smart thermostats w/ CO2 monitoring.

  The Scope of Work includes:

  - Disconnect and remove the existing thermostats.
  - Install new locally mounted Wi-Fi smart thermostats to allow for local control and override capabilities within a pre-programmed range.
  - Programming and checkout.

  The Scope of Work excludes:

  - Any required upgrades or improvements to the existing network.
  - Controls for existing evaporative cooling units, heating only units, ductless split system units, and window AC units.

EV Charging

El Arroyo Restrooms

- Provide and install two (2) dual-port and one (1) single-port Level 2 EV charging stations at Kit Carson Park for public use. Final location of charging stations to be determined upon final engineering and ADA review.

The Scope of Work Includes:

- EV chargers will be installed at parking stalls just north of the El Arroyo restrooms.
- Provide and install two (2) dual-port and one (1) single-port EV charging station(s).
- Provide and install new electrical wiring and components, as necessary, to connect the EV charger to the existing power source.
- Install three (3) concrete bases to support the EV pedestals.
- Provide ADA stall restripes for (1) Van Accessible ADA accessible EV charging stall.
- Provide and install new bollards and/or wheel block and signage, as necessary for each EV parking stall.
- Concrete and/or site repairs to return work affected areas to "as-found" conditions.
- Start-up/testing of the new EV charger(s).

The Scope of Work excludes:

- Undisclosed electrical and structural upgrades/modifications.
- Upgrades, repairs, parking lot restriping, ADA improvements (unless mentioned), or additional work not associated with the EV Charger installation but required to bring existing undisclosed or unforeseen ADA and/or electrical deficiencies up to the current code.

Sports Center

- Provide and install two (2) dual-port and one (1) single-port Level 2 EV charging stations at Kit Carson Park for public use. Final location of charging stations to be determined upon final engineering and ADA review.

The Scope of Work Includes:

- EV chargers will be installed at parking stalls beneath existing western-most solar PV carport at the Sports Center.
- Provide and install two (2) dual-port and one (1) single-port EV charging station(s).
- Provide and install new electrical wiring and components, as necessary, to connect the EV charger to the existing power source.
- Install three (3) concrete bases to support the EV pedestals.
- Provide ADA stall restripes for (1) Van Accessible ADA accessible EV charging stall.
- Provide and install new bollards and/or wheel block and signage, as necessary for each EV parking stall.
- Concrete and/or site repairs to return work affected areas to "as-found" conditions.
- Start-up/testing of the new EV charger(s).

The Scope of Work excludes:

- Undisclosed electrical and structural upgrades/modifications.
- Upgrades, repairs, parking lot restriping, ADA improvements (unless mentioned), or additional work not associated with the EV Charger installation but required to bring existing undisclosed or unforeseen ADA and/or electrical deficiencies up to the current code.

Tennis Courts

- Provide and install two (2) dual-port and one (1) single-port Level 2 EV charging stations at Kit Carson Park for public use. Final location of charging stations to be determined upon final engineering and ADA review.

The Scope of Work Includes:

- EV chargers will be installed at parking stalls just east of the Tennis Courts.
- Provide and install two (2) dual-port and one (1) single-port EV charging station(s).
- Provide and install new electrical wiring and components, as necessary, to connect the EV charger to the existing power source.
- Install three (3) concrete bases to support the EV pedestals.
- Provide ADA stall restripes for (1) Van Accessible ADA accessible EV charging stall.
- Provide and install new bollards and/or wheel block and signage, as necessary for each EV parking stall.
- Concrete and/or site repairs to return work affected areas to "as-found" conditions.
- Start-up/testing of the new EV charger(s).

The Scope of Work excludes:

- Undisclosed electrical and structural upgrades/modifications.
- Upgrades, repairs, parking lot restriping, ADA improvements (unless mentioned), or additional work not associated with the EV Charger installation but required to bring existing undisclosed or unforeseen ADA and/or electrical deficiencies up to the current code.

Adult Softball Complex

- Provide and install two (2) dual-port and one (1) single-port Level 2 EV charging stations at Kit Carson Park for public use. Final location of charging stations to be determined upon final engineering and ADA review.

The Scope of Work Includes:

- EV chargers will be installed near the Adult Softball Complex.
- Provide and install two (2) dual-port and one (1) single-port EV charging station(s).
- Provide and install new electrical wiring and components, as necessary, to connect the EV charger to the existing power source.
- Install three (3) concrete bases to support the EV pedestals.

- Provide ADA stall restripes for (1) Van Accessible ADA accessible EV charging stall.
- Provide and install new bollards and/or wheel block and signage, as necessary for each EV parking stall.
- Concrete and/or site repairs to return work affected areas to "as-found" conditions.
- Start-up/testing of the new EV charger(s).

The Scope of Work excludes:

- Undisclosed electrical and structural upgrades/modifications.
- Upgrades, repairs, parking lot restriping, ADA improvements (unless mentioned), or additional work not associated with the EV Charger installation but required to bring existing undisclosed or unforeseen ADA and/or electrical deficiencies up to the current code.

Lake Wohlford Boat House

Lighting

- Retrofit identified interior T8 and LED lighting systems with new high efficiency LED lighting systems. Please see the Lighting Summary in Attachment B for information on lighting scope, quantities, and locations. Occupancy sensors and/or dimming control, if provided, will be identified within the Lighting Summary.
- Retrofit identified exterior building mounted HID lighting systems with new high efficiency LED lighting systems. Please see the Lighting Summary in Attachment B for information on lighting scope, quantities, and locations.

Library

Lighting

- Retrofit identified exterior building mounted HID lighting systems with new high efficiency LED lighting systems. Please see the Lighting Summary in Attachment B for information on lighting scope, quantities, and locations.

Transformers

- Replace one (1) existing transformer with new equal capacity high efficiency transformer. The new transformer will be of the same electrical configuration and be placed in the same location and fit within existing constraints as the existing transformer.
  The Scope of Work Includes:
  - Remove and dispose of existing transformer.
  - Installation of new dry type, low loss, high efficiency transformer.
  - Disconnect / reconnect primary and secondary feeders.
  - Proper grounding connections.
  - Installation per manufacturer's guidelines.
  - Compliance with all state, local electric codes.

The Scope of Work Excludes:

- Upgrades, repairs, or additional work required to bring undisclosed or unforeseen electrical deficiencies up to current code.

Power Resiliency / Back Up Power

- Provide and install one (1) new permanently connected 250kW backup generator with 800A automatic transfer switch (ATS) to provide automatic emergency backup power to the building.

The Scope of Work includes:

- Provide and install one (1) new 250kW natural gas generator in the northeast parking lot near the existing switchgear.
- Provide and install one (1) new 800Amp 3-pole automatic transfer switch (ATS).
- Provide and install necessary materials to connect the new generator and ATS to the main switchboard.
- Provide concrete pad for the new generator.
- Provide new bollards as required.
- Provide and install new natural gas piping to connect the generator to the existing natural gas service.
- Start-up/testing of the new generator.
- New generator and ATS specifications to be determined upon final engineering design.

The Scope of Work excludes:

- Undisclosed electrical and structural upgrades/modifications.

EV Charging

- Provide and install two (2) single-port Level 2 EV charging stations at the Library for public use. Final location of charging stations to be determined upon final engineering and ADA review.

The Scope of Work Includes:

- EV chargers will be installed in Library parking lot beneath new solar carport.
- Provide and install two (2) single-port EV charging station(s).
- Provide and install new electrical wiring and components, as necessary, to connect the EV charger to the existing power source.
- Install two (2) concrete bases to support the EV pedestals.
- Provide ADA stall restripes for (1) Van Accessible ADA accessible EV charging stall.
- Provide and install new bollards and/or wheel block and signage, as necessary for each EV parking stall.
- Concrete and/or site repairs to return work affected areas to "as-found" conditions.
- Start-up/testing of the new EV charger(s).

The Scope of Work excludes:

- Undisclosed electrical and structural upgrades/modifications.
- Upgrades, repairs, parking lot restriping, ADA improvements (unless mentioned), or additional work not associated with the EV Charger installation but required to bring existing undisclosed or unforeseen ADA and/or electrical deficiencies up to the current code.

Renewables

- Provide and install a new 175.0 kW_{DC} solar PV carport system. Installation will include necessary engineering, labor, and equipment to connect the new PV system to the existing electrical meter(s). Please refer to Attachment D for additional details on scope, location, system sizing, and point(s) of interconnection.

  Scope of work includes:
  - Engineering, soil testing, construction, commissioning, and monitoring of the new PV system.
  - Removal, demolition, and haul away of (2) existing exterior light that coincide with proposed carport-mounted solar PV system.
  - Installation of solar PV array on structural steel carports over the single row of existing parking stalls along northern edge of Library parking lot, in addition to a carport over the main island of parking stalls in the center of the parking lot.
  - Installation of carport underside lighting.
  - Support to execute the utility interconnection agreement.
- Installation of data acquisition system to provide system performance monitoring.

  Scope of work excludes:
  - Upgrades, repairs, parking lot restriping, ADA improvements, or additional work not associated with the solar PV Carport installation but required to bring existing undisclosed or unforeseen ADA and/or electrical deficiencies up to the current code.

Mathes Center

Lighting

- Retrofit identified interior T8 lighting systems with new high efficiency LED lighting systems. Please see the Lighting Summary in Attachment B for information on lighting scope, quantities, and locations. Occupancy sensors and/or dimming control, if provided, will be identified within the Lighting Summary.

Mechanical

- Replace seven (7) packaged gas / electric units with new high efficiency packaged heat pump units of similar size and capacity of previous units. Please refer to the Mechanical Replacement Inventory for equipment size and location.

The Scope of Work Includes:

- Removal and proper disposal of existing units.
- Proper containment and disposal of refrigerant per EPA guidelines.
- Installation of new units.
- Curb modifications, rigging, setting new units onto roof curb as necessary.
- Disconnection/reconnection of the existing electrical service.
- Installation of new electrical disconnects.
- Condensate connections.
- Cap existing gas lines.
- Start-up/testing of the new units and connection to the new Wi-Fi smart thermostat network.

The Scope of Work Excludes:

- Undisclosed electrical and structural upgrades/modifications.
- Roofing repairs not directly related to the scope of mechanical work.
- Any required programming or system upgrades to the existing fire alarm system.
- Duct repair and air balancing.

Controls

- Provide and install nine (9) new Wi-Fi smart thermostats w/ CO2 monitoring.

The Scope of Work includes:

- Disconnect and remove the existing thermostats.
- Install new locally mounted Wi-Fi smart thermostats to allow for local control and override capabilities within a pre-programmed range.
- Programming and checkout.

The Scope of Work excludes:

- Any required upgrades or improvements to the existing network.
- Controls for existing evaporative cooling units, heating only units, ductless split system units, and window AC units.

Mayflower Dog Park

Lighting

- Retrofit identified exterior pole mounted HID lighting systems with new high efficiency LED lighting systems. Please see the Lighting Summary in Attachment B for information on lighting scope, quantities, and locations.

- Retrofit HID field lighting systems with new high efficiency LED lighting systems. Please see the Lighting Summary in Attachment B for information on lighting scope, quantities, and locations.

Scope of work includes:

- Remove and dispose of existing HID field lighting fixtures.
- Installation of the new LED field lighting fixtures with instant on capability and step controls onto existing poles.
- Photometric analysis will be provided to the City prior to any material orders to ensure proper coverage of area.
- Proper directional control to prevent light trespass off property.
- New control system with web access
- Required wiring and conduit to connect lighting and controls.
- Assumption that existing field lighting support poles have been approved by the City for the use of supporting the existing field lighting systems.
- Reuse of the existing field lighting support poles to affix the new lighting system.
- Verification that existing field lighting poles will structurally support the new lighting system.
- Manufacturer provided training to staff.
- Manufacturer provided 10-year warranty.

Scope of Work Excludes:

- New electrical service or improvements to existing electrical infrastructure.
- Any wiring or conduit between poles or panels to poles.
- New field lighting fixture support poles.
- Retroactive city approval / certification of existing field lighting poles.

Mountain View Park

Lighting

- Retrofit identified interior T8 lighting systems with new high efficiency LED lighting systems. Please see the Lighting Summary in Attachment B for information on lighting scope, quantities, and locations. Occupancy sensors and/or dimming control, if provided, will be identified within the Lighting Summary.

- Retrofit identified exterior building and pole mounted HID lighting systems with new high efficiency LED lighting systems. Please see the Lighting Summary in Attachment B for information on lighting scope, quantities, and locations.

- Retrofit HID sports field lighting systems with new high efficiency LED lighting systems. Please see the Lighting Summary in Attachment B for information on lighting scope, quantities, and locations.

  Scope of work includes:

  - Remove and dispose of existing HID sports field lighting fixtures.
  - Installation of the new LED field lighting fixtures with instant on capability and step controls onto existing poles.
  - Photometric analysis will be provided to the City prior to any material orders to ensure proper coverage of the sport area.

- Proper directional control to prevent light trespass off property.
- New control system with web access.
- Required wiring and conduit to connect lighting and controls.
- Assumption that existing sport field lighting support poles have been approved by the City for the use of supporting the existing sports field lighting systems.
- Reuse of the existing sports field lighting support poles to affix the new lighting system.
- Verification that existing sports field lighting poles will structurally support the new lighting system.
- Manufacturer provided training to staff.
- Manufacturer provided 10-year warranty.

Scope of Work Excludes:

- New electrical service or improvements to existing electrical infrastructure.
- Any wiring or conduit between poles or panels to poles.
- New sports field lighting fixture support poles.
- Retroactive city approval / certification of existing sports field lighting poles.

Oak Hill Activity Center

Lighting

- Retrofit identified interior T8 and CFL lighting systems with new high efficiency LED lighting systems. Please see the Lighting Summary in Attachment B for information on lighting scope, quantities, and locations. Occupancy sensors and/or dimming control, if provided, will be identified within the Lighting Summary.

- Retrofit identified exterior building mounted CFL lighting systems with new high efficiency LED lighting systems. Please see the Lighting Summary in Attachment B for information on lighting scope, quantities, and locations.

Mechanical

- Replace one (1) mini-split heat pump with new high efficiency unit of similar size and capacity of previous unit. Please refer to the Mechanical Replacement Inventory for equipment size and location. The Scope of Work Includes:
  - Removal and proper disposal of existing unit.
  - Proper containment and disposal of refrigerant per EPA guidelines.
  - Installation of new unit.
  - Flush and reconnect existing line set and pressure test.
  - Disconnection/reconnection of the existing electrical service.
  - Installation of new electrical disconnects.
  - Condensate connections.
  - Start-up/testing of the new unit and connection to the new Wi-Fi smart thermostat network.

The Scope of Work Excludes:

- Undisclosed electrical and structural upgrades/modifications.
- Any required programming or system upgrades to the existing fire alarm system.

- Replace one (1) split-system furnace with new high efficiency unit of similar size and capacity of previous unit. Please refer to the Mechanical Replacement Inventory for equipment size and location.
  The Scope of Work Includes:
  - Removal and proper disposal of existing unit.
  - Proper containment and disposal of refrigerant per EPA guidelines.
  - Installation of new unit.
  - Flush and reconnect existing line set and pressure test.
  - Disconnection/reconnection of the existing electrical service.
  - Installation of new electrical disconnects.
  - Condensate connections.
  - Cap existing gas lines.
  - Start-up/testing of the new unit and connection to the new Wi-Fi smart thermostat network.

  The Scope of Work Excludes:
  - Undisclosed electrical and structural upgrades/modifications.
  - Any required programming or system upgrades to the existing fire alarm system.
  - Duct repair and air balancing.

Controls

- Provide and install two (2) new Wi-Fi smart thermostats w/ CO2 monitoring.

  The Scope of Work includes:
  - Disconnect and remove the existing thermostats.
  - Install new locally mounted Wi-Fi smart thermostats to allow for local control and override capabilities within a pre-programmed range.
  - Programming and checkout.

  The Scope of Work excludes:
  - Any required upgrades or improvements to the existing network.
  - Controls for existing evaporative cooling units, heating only units, ductless split system units, and window AC units.

Park Avenue Community Center (PACC) / Veterans Center

Lighting

- Retrofit identified interior T8 and CFL lighting systems with new high efficiency LED lighting systems. Please see the Lighting Summary in Attachment B for information on lighting scope, quantities, and locations. Occupancy sensors and/or dimming control, if provided, will be identified within the Lighting Summary.

- Retrofit identified exterior building and pole mounted T8, CFL, and HID lighting systems with new high efficiency LED lighting systems. Please see the Lighting Summary in Attachment B for information on lighting scope, quantities, and locations.

Power Resiliency / Back Up Power

- Provide and install one (1) new permanently connected 130kW backup generator with 600A automatic transfer switch (ATS) to provide automatic emergency backup power to the building.

  The Scope of Work includes:
  - Provide and install one (1) new 130kW natural gas generator in the center courtyard.
  - Provide and install one (1) new 600Amp 3-pole automatic transfer switch (ATS).
  - Provide and install necessary materials to connect the new generator and ATS to the main switchgear.
  - Provide concrete pad for the new generator.
  - Provide new bollards as required.
  - Provide and install new natural gas piping to connect the generator to the existing natural gas service.
  - Start-up/testing of the new generator.
  - New generator and ATS specifications to be determined upon final engineering design.

  The Scope of Work excludes:
  - Undisclosed electrical and structural upgrades/modifications.

Transformers

- Replace two (2) existing transformers with new equal capacity high efficiency transformers. The new transformers will be of the same electrical configuration and be placed in the same location and fit within existing constraints as the existing transformers.
  The Scope of Work Includes:
  - Remove and dispose of existing transformers.
  - Installation of new dry type, low loss, high efficiency transformers.
  - Disconnect / reconnect primary and secondary feeders.
  - Proper grounding connections.
  - Installation per manufacturer's guidelines.
  - Compliance with all state, local electric codes.

  The Scope of Work Excludes:
  - Upgrades, repairs, or additional work required to bring undisclosed or unforeseen electrical deficiencies up to current code.

Roof Recoating

- Coat existing built-up flat roof areas of PACC buildings with fluid applied roofing.

  Scope of Work Includes:
  - Preparation of existing built-up roof to include removal of dirt, debris, and gravel.
  - Pressure wash built-up roof surfaces to be coated.
  - Remove and reinstall counterflashing as needed.
  - Seal pipes, vents, and other roof equipment.
  - Cut blisters and seal as needed.
  - Apply silicone coating per manufacturer's guidelines to required thickness.
  - Reseal top of counterflashing as needed.

  Scope of Work Excludes:
  - Structural repairs.
  - Asbestos and/or lead abatement.

EV Charging

- Provide and install one (1) dual-port and two (2) single-port Level 2 EV charging stations at the PACC for public use. Final location of charging stations to be determined upon final engineering and ADA review.
  The Scope of Work Includes:
  - EV chargers will be installed in PACC parking lot beneath the new solar PV carport.
  - Provide and install one (1) dual-port and two (2) single-port EV charging station(s).
  - Provide and install new electrical wiring and components, as necessary, to connect the EV charger to the existing power source.
  - Install three (3) concrete bases to support the EV pedestals.
  - Provide ADA stall restripes for (1) Van Accessible ADA accessible EV charging stall.
  - Provide and install new bollards and/or wheel block and signage, as necessary for each EV parking stall.
  - Concrete and/or site repairs to return work affected areas to "as-found" conditions.
  - Start-up/testing of the new EV charger(s).

  The Scope of Work excludes:

  - Undisclosed electrical and structural upgrades/modifications.
  - Upgrades, repairs, parking lot restriping, ADA improvements (unless mentioned), or additional work not associated with the EV Charger installation but required to bring existing undisclosed or unforeseen ADA and/or electrical deficiencies up to the current code.

Renewables

- Provide and install a new 71.3 kW_{DC} carport-mounted solar PV system. Installation will include necessary engineering, labor, and equipment to connect the new PV system to the existing electrical meter(s). Please refer to Attachment D for additional details on scope, location, system sizing, and point(s) of interconnection.

  Scope of work includes:
  - Engineering, soil testing, construction, commissioning, and monitoring of the new PV system.
  - Installation of solar PV array on structural steel carport over the single row of existing parking stalls just north of the PACC facility's northern entrance,
  - Installation of carport underside lighting.
  - Support to execute the utility interconnection agreement.
  - Installation of data acquisition system to provide system performance monitoring.

  Scope of work excludes:
  - Upgrades, repairs, parking lot restriping, ADA improvements, or additional work not associated with the solar PV Carport installation but required to bring existing undisclosed or unforeseen ADA and/or electrical deficiencies up to the current code.

Police and Fire Head Quarters.

Lighting

- Retrofit identified interior T8, CFL, and LED lighting systems with new high efficiency LED lighting systems. Please see the Lighting Summary in Attachment B for information on lighting scope, quantities, and locations. Occupancy sensors and/or dimming control, if provided, will be identified within the Lighting Summary.

- Retrofit identified exterior building and pole mounted CFL, and HID lighting systems with new high efficiency LED lighting systems. Please see the Lighting Summary in Attachment B for information on lighting scope, quantities, and locations.

Transformers

- Replace two (2) existing transformers with new equal capacity high efficiency transformers. The new transformers will be of the same electrical configuration and be placed in the same location and fit within existing constraints as the existing transformers.
  The Scope of Work Includes:
  - Remove and dispose of existing transformers.
  - Installation of new dry type, low loss, high efficiency transformers.
  - Disconnect / reconnect primary and secondary feeders.
  - Proper grounding connections.
  - Installation per manufacturer's guidelines.

- Compliance with all state, local electric codes.

The Scope of Work Excludes:

- Upgrades, repairs, or additional work required to bring undisclosed or unforeseen electrical deficiencies up to current code.

Public Works Yard

Mechanical

- Replace two (2) split-system heat pumps with new high efficiency units of similar size and capacity of previous units. Please refer to the Mechanical Replacement Inventory for equipment size and location.
  The Scope of Work Includes:
  - Removal and proper disposal of existing units.
  - Proper containment and disposal of refrigerant per EPA guidelines.
  - Installation of new units.
  - Flush and reconnect existing line set and pressure test.
  - Disconnection/reconnection of the existing electrical service.
  - Installation of new electrical disconnects.
  - Condensate connections.
  - Start-up/testing of the new units and connection to the new Wi-Fi smart thermostat network.

  The Scope of Work Excludes:
  - Undisclosed electrical and structural upgrades/modifications.
  - Any required programming or system upgrades to the existing fire alarm system.
  - Duct repair and air balancing.

- Replace one (1) split-system furnace with new high efficiency split-system heat pump unit of similar size and capacity of previous unit. Please refer to the Mechanical Replacement Inventory for equipment size and location.
  The Scope of Work Includes:
  - Removal and proper disposal of existing unit.
  - Proper containment and disposal of refrigerant per EPA guidelines.
  - Installation of new unit.
  - Flush and reconnect existing line set and pressure test.
  - Disconnection/reconnection of the existing electrical service.
  - Installation of new electrical disconnects.
  - Condensate connections.
  - Cap existing gas lines.

- Start-up/testing of the new unit and connection to the new Wi-Fi smart thermostat network.

The Scope of Work Excludes:

- Undisclosed electrical and structural upgrades/modifications.
- Any required programming or system upgrades to the existing fire alarm system.
- Duct repair and air balancing.

- Replace one (1) wall-mounted heat pump with new high efficiency unit of similar size and capacity of previous unit. Please refer to the Mechanical Replacement Inventory for equipment size and location. The Scope of Work Includes:
  - Removal and proper disposal of existing unit.
  - Proper containment and disposal of refrigerant per EPA guidelines.
  - Installation of new unit.
  - Disconnection/reconnection of the existing electrical service.
  - Installation of new electrical disconnects.
  - Start-up/testing of the new unit and connection to the new Wi-Fi smart thermostat network.

  The Scope of Work Excludes:
  - Undisclosed electrical and structural upgrades/modifications.
  - Any required programming or system upgrades to the existing fire alarm system.
  - Duct repair and air balancing

Controls

- Provide and install thirteen (13) new Wi-Fi smart thermostats w/ CO2 monitoring.

  The Scope of Work includes:
  - Disconnect and remove the existing thermostats.
  - Install new locally mounted Wi-Fi smart thermostats to allow for local control and override capabilities within a pre-programmed range.
  - Programming and checkout.

  The Scope of Work excludes:
  - Any required upgrades or improvements to the existing network.
  - Controls for existing evaporative cooling units, heating only units, ductless split system units, and window AC units.

Power Resiliency / Back Up Power

- Provide and install one (1) new permanently connected 300kW backup generator with 1200A automatic transfer switch (ATS) to provide automatic emergency backup power to the building.

The Scope of Work includes:

- Provide and install one (1) new 300kW natural gas generator in the center courtyard.
- Provide and install one (1) new 1200Amp 3-pole automatic transfer switch (ATS).
- Provide and install necessary materials to connect the new generator and ATS to the main switchgear.
- Provide concrete pad for the new generator.
- Provide new bollards as required.
- Provide and install new natural gas piping to connect the generator to the existing natural gas service.
- Start-up/testing of the new generator.
- New generator and ATS specifications to be determined upon final engineering design.

The Scope of Work excludes:

- Undisclosed electrical and structural upgrades/modifications.

EV Charging

- Provide and install five (5) dual-port Level 2 EV charging stations at the Public Works Yard authorized electric vehicles only. Final location of charging stations to be determined upon final engineering and ADA review.

  The Scope of Work Includes:

  - EV chargers will be installed in southeast parking lot located off Spruce St.
  - Provide and install five (5) dual-port EV charging stations.
  - Provide and install new electrical wiring and components, as necessary, to connect the EV charger to the existing power source.
  - Install five (5) concrete bases to support the EV pedestals.
  - Provide and install new bollards and/or wheel block and signage, as necessary for each EV parking stall.
  - Concrete and/or site repairs to return work affected areas to "as-found" conditions.
  - Start-up/testing of the new EV charger(s).

  The Scope of Work excludes:

  - Undisclosed electrical and structural upgrades/modifications.
  - Upgrades, repairs, parking lot restriping, improvements (unless mentioned), or additional work not associated with the EV Charger installation but required to bring existing undisclosed or unforeseen lot or electrical deficiencies up to the current code.

Ranger Station – Dixon Lake

Lighting

- Retrofit identified interior T8 and CFL lighting systems with new high efficiency LED lighting systems. Please see the Lighting Summary in Attachment B for information on lighting scope,

quantities, and locations. Occupancy sensors and/or dimming control, if provided, will be identified within the Lighting Summary.

- Retrofit identified exterior building mounted T8, CFL, and HID lighting systems with new high efficiency LED lighting systems. Please see the Lighting Summary in Attachment B for information on lighting scope, quantities, and locations.

Controls

- Provide and install two (2) new Wi-Fi smart thermostats w/ CO2 monitoring.

  The Scope of Work includes:
  - Disconnect and remove the existing thermostats.
  - Install new locally mounted Wi-Fi smart thermostats to allow for local control and override capabilities within a pre-programmed range.
  - Programming and checkout.

  The Scope of Work excludes:
  - Any required upgrades or improvements to the existing network.
  - Controls for existing evaporative cooling units, heating only units, ductless split system units, and window AC units.

Ranger Station – Lake Wohlford

Mechanical

- Replace one (1) wall-mounted heat pump with new high efficiency unit of similar size and capacity of previous unit. Please refer to the Mechanical Replacement Inventory for equipment size and location.

  The Scope of Work Includes:
  - Removal and proper disposal of existing unit.
  - Proper containment and disposal of refrigerant per EPA guidelines.
  - Installation of new unit.
  - Curb modifications, rigging, setting new unit onto curb as necessary.
  - Disconnection/reconnection of the existing electrical service.
  - Installation of new electrical disconnects.
  - Start-up/testing of the new unit and connection to the new Wi-Fi smart thermostat network.

  The Scope of Work Excludes:
  - Undisclosed electrical and structural upgrades/modifications.
  - Any required programming or system upgrades to the existing fire alarm system.
  - Duct repair and air balancing.

Controls

- Provide and install one (1) new Wi-Fi smart thermostat w/ CO2 monitoring.

  The Scope of Work includes:
  - Disconnect and remove the existing thermostat.
  - Install new locally mounted Wi-Fi smart thermostat to allow for local control and override capabilities within a pre-programmed range.
  - Programming and checkout.

  The Scope of Work excludes:
  - Any required upgrades or improvements to the existing network.
  - Controls for existing evaporative cooling units, heating only units, ductless split system units, and window AC units.

Real Estate Property

Mechanical

- Replace three (3) packaged gas / electric units with new high efficiency packaged heat pump units of similar size and capacity of previous units. Please refer to the Mechanical Replacement Inventory for equipment size and location.

  The Scope of Work Includes:
  - Removal and proper disposal of existing units.
  - Proper containment and disposal of refrigerant per EPA guidelines.
  - Installation of new units.
  - Curb modifications, rigging, setting new units onto roof curb as necessary.
  - Disconnection/reconnection of the existing electrical service.
  - Installation of new electrical disconnects.
  - Condensate connections.
  - Cap existing gas lines.
  - Start-up/testing of the new units and connection to the new Wi-Fi smart thermostat network.

  The Scope of Work Excludes:
  - Undisclosed electrical and structural upgrades/modifications.
  - Roofing repairs not directly related to the scope of mechanical work.
  - Any required programming or system upgrades to the existing fire alarm system.
  - Duct repair and air balancing.
- Replace one (1) split-system heat pump unit with new high efficiency unit of similar size and capacity of previous unit. Please refer to the Mechanical Replacement Inventory for equipment size and location.

The Scope of Work Includes:

- Removal and proper disposal of existing unit.
- Proper containment and disposal of refrigerant per EPA guidelines.
- Installation of new unit.
- Flush and reconnect existing line set and pressure test.
- Disconnection/reconnection of the existing electrical service.
- Installation of new electrical disconnects.
- Condensate connections.
- Start-up/testing of the new unit and connection to the new Wi-Fi smart thermostat network.

The Scope of Work Excludes:

- Undisclosed electrical and structural upgrades/modifications.
- Roofing repairs not directly related to the scope of mechanical work.
- Any required programming or system upgrades to the existing fire alarm system.
- Duct repair and air balancing.

Controls

- Provide and install seven (7) new Wi-Fi smart thermostats w/ CO2 monitoring.
  The Scope of Work includes:
  - Disconnect and remove the existing thermostats.
  - Install new locally mounted Wi-Fi smart thermostats to allow for local control and override capabilities within a pre-programmed range.
  - Programming and checkout.

  The Scope of Work excludes:
  - Any required upgrades or improvements to the existing network.
  - Controls for existing evaporative cooling units, heating only units, ductless split system units, and window AC units.

Recycling Offices

Lighting

- Retrofit identified interior T12, incandescent, and LED lighting systems with new high efficiency LED lighting systems. Please see the Lighting Summary in Attachment B for information on lighting scope, quantities, and locations. Occupancy sensors and/or dimming control, if provided, will be identified within the Lighting Summary.
- Retrofit identified exterior building mounted incandescent lighting systems with new high efficiency LED lighting systems. Please see the Lighting Summary in Attachment B for information on lighting scope, quantities, and locations.

Mechanical

- Replace two (2) wall-mounted heat pumps with new high efficiency units of similar size and capacity of previous units. Please refer to the Mechanical Replacement Inventory for equipment size and location.

The Scope of Work Includes:

- Removal and proper disposal of existing units.
- Proper containment and disposal of refrigerant per EPA guidelines.
- Installation of new units.
- Disconnection/reconnection of the existing electrical service.
- Installation of new electrical disconnects.
- Start-up/testing of the new units and connection to the new Wi-Fi smart thermostat network.

The Scope of Work Excludes:

- Undisclosed electrical and structural upgrades/modifications.
- Any required programming or system upgrades to the existing fire alarm system.
- Duct repair and air balancing.

Controls

- Provide and install two (2) new Wi-Fi smart thermostats w/ CO2 monitoring.

The Scope of Work includes:

- Disconnect and remove the existing thermostats.
- Install new locally mounted Wi-Fi smart thermostats to allow for local control and override capabilities within a pre-programmed range.
- Programming and checkout.

The Scope of Work excludes:

- Any required upgrades or improvements to the existing network.
- Controls for existing evaporative cooling units, heating only units, ductless split system units, and window AC units.

Transformers

- Replace one (1) existing transformer with new equal capacity high efficiency transformer. The new transformer will be of the same electrical configuration and be placed in the same location and fit within existing constraints as the existing transformer.

The Scope of Work Includes:

- Remove and dispose of existing transformer.
- Installation of new dry type, low loss, high efficiency transformer.

- Disconnect / reconnect primary and secondary feeders.
- Proper grounding connections.
- Installation per manufacturer's guidelines.
- Compliance with all state, local electric codes.

The Scope of Work Excludes:

- Upgrades, repairs, or additional work required to bring undisclosed or unforeseen electrical deficiencies up to current code.

Reidy Creek Golf Course

Transformers

- Replace one (1) existing transformer with new equal capacity high efficiency transformer. The new transformer will be of the same electrical configuration and be placed in the same location and fit within existing constraints as the existing transformer.
  The Scope of Work Includes:
  - Remove and dispose of existing transformer.
  - Installation of new dry type, low loss, high efficiency transformer.
  - Disconnect / reconnect primary and secondary feeders.
  - Proper grounding connections.
  - Installation per manufacturer's guidelines.
  - Compliance with all state, local electric codes.

  The Scope of Work Excludes:
  - Upgrades, repairs, or additional work required to bring undisclosed or unforeseen electrical deficiencies up to current code.

Rod McLeod Park

Lighting

- Retrofit identified interior T8 lighting systems with new high efficiency LED lighting systems. Please see the Lighting Summary in Attachment B for information on lighting scope, quantities, and locations. Occupancy sensors and/or dimming control, if provided, will be identified within the Lighting Summary.

- Retrofit identified building mounted HID lighting systems with new high efficiency LED lighting systems. Please see the Lighting Summary in Attachment B for information on lighting scope, quantities, and locations.

Ryan Park

Lighting

- Retrofit identified interior T8 and CFL lighting systems with new high efficiency LED lighting systems. Please see the Lighting Summary in Attachment B for information on lighting scope, quantities, and locations. Occupancy sensors and/or dimming control, if provided, will be identified within the Lighting Summary.

- Retrofit identified building and pole mounted HID and LED lighting systems with new high efficiency LED lighting systems. Please see the Lighting Summary in Attachment B for information on lighting scope, quantities, and locations.

Transformers

- Replace one (1) existing transformer with new equal capacity high efficiency transformer. The new transformer will be of the same electrical and be placed in the same location and fit within existing constraints as the existing transformer.
  The Scope of Work Includes:
  - Remove and dispose of existing transformer.
  - Installation of new dry type, low loss, high efficiency transformer.
  - Disconnect / reconnect primary and secondary feeders.
  - Proper grounding connections.
  - Installation per manufacturer's guidelines.
  - Compliance with all state, local electric codes.

  The Scope of Work Excludes:
  - Upgrades, repairs, or additional work required to bring undisclosed or unforeseen electrical deficiencies up to current code.

EV Charging

- Provide and install two (2) dual-port and one (1) single-port Level 2 EV charging stations at Ryan Park for public use. Final location of charging stations to be determined upon final engineering and ADA review.

  The Scope of Work Includes:
  - EV chargers will be installed in the east parking lot near the restrooms.
  - Provide and install two (2) dual-port and one (1) single-port EV charging station(s).
  - Provide and install new electrical wiring and components, as necessary, to connect the EV charger to the existing power source.
  - Install three (3) concrete bases to support the EV pedestals.
  - Provide ADA stall restripes for (1) Van Accessible ADA accessible EV charging stall.

- Provide and install new bollards and/or wheel block and signage, as necessary for each EV parking stall.
- Concrete and/or site repairs to return work affected areas to "as-found" conditions.
- Start-up/testing of the new EV charger(s).

The Scope of Work excludes:

- Undisclosed electrical and structural upgrades/modifications.
- Upgrades, repairs, parking lot restriping, ADA improvements (unless mentioned), or additional work not associated with the EV Charger installation but required to bring existing undisclosed or unforeseen ADA and/or electrical deficiencies up to the current code.

Vineyard Golf Course

Mechanical

- Replace two (2) split-system heat pumps with new high efficiency units of similar size and capacity of previous units. Please refer to the Mechanical Replacement Inventory for equipment size and location.

The Scope of Work Includes:

- Removal and proper disposal of existing units.
- Proper containment and disposal of refrigerant per EPA guidelines.
- Installation of new units.
- Flush and reconnect existing line set and pressure test.
- Disconnection/reconnection of the existing electrical service.
- Installation of new electrical disconnects.
- Condensate connections.
- Start-up/testing of the new units and connection to the new Wi-Fi smart thermostat network.

The Scope of Work Excludes:

- Undisclosed electrical and structural upgrades/modifications.
- Any required programming or system upgrades to the existing fire alarm system.
- Duct repair and air balancing

Controls

- Provide and install three (3) new Wi-Fi smart thermostats w/ CO2 monitoring.

The Scope of Work includes:

- Disconnect and remove the existing thermostats.

- Install new locally mounted Wi-Fi smart thermostats to allow for local control and override capabilities within a pre-programmed range.
- Programming and checkout.

The Scope of Work excludes:

- Any required upgrades or improvements to the existing network.
- Controls for existing evaporative cooling units, heating only units, ductless split system units, and window AC units.

Washington Park

Lighting

- Retrofit identified exterior pole mounted HID lighting systems with new high efficiency LED lighting systems. Please see the Lighting Summary in Attachment B for information on lighting scope, quantities, and locations.

Controls

- Provide and install two (2) new Wi-Fi smart thermostats w/ CO2 monitoring.

The Scope of Work includes:

- Disconnect and remove the existing thermostats.
- Install new locally mounted Wi-Fi smart thermostats to allow for local control and override capabilities within a pre-programmed range.
- Programming and checkout.

The Scope of Work excludes:

- Any required upgrades or improvements to the existing network.
- Controls for existing evaporative cooling units, heating only units, ductless split system units, and window AC units.

EV Charging

- Provide and install one (1) dual-port and one (1) single-port Level 2 EV charging stations at Washington Park for public use. Final location of charging stations to be determined upon final engineering and ADA review.

The Scope of Work Includes:

- EV chargers will be installed in Washington Park parking lot beneath the new solar PV carport.
- Provide and install one (1) dual-port and one (1) single-port EV charging station(s).
- Provide and install new electrical wiring and components, as necessary, to connect the EV charger to the existing power source.
- Install two (2) concrete bases to support the EV pedestals.

- Provide ADA stall restripes for (1) Van Accessible ADA accessible EV charging stall.
- Provide and install new bollards and/or wheel block and signage, as necessary for each EV parking stall.
- Concrete and/or site repairs to return work affected areas to "as-found" conditions.
- Start-up/testing of the new EV charger(s).

The Scope of Work excludes:

- Undisclosed electrical and structural upgrades/modifications.
- Upgrades, repairs, parking lot restriping, ADA improvements (unless mentioned), or additional work not associated with the EV Charger installation but required to bring existing undisclosed or unforeseen ADA and/or electrical deficiencies up to the current code.

Renewables

- Provide and install a new 77.8 kW_{DC} carport-mounted solar PV system. Installation will include necessary engineering, labor, and equipment to connect the new PV system to the existing electrical meter(s). Please refer to Attachment D for additional details on scope, location, system sizing, and point(s) of interconnection.

  Scope of work includes:

  - Engineering, soil testing, construction, commissioning, and monitoring of the new PV system.
  - Removal, demolition, and haul away of (1) existing exterior light pole and (3) small sized trees that coincide with proposed carport-mounted solar PV system.
  - Installation of solar PV array on structural steel carport over the south-easternmost parking island in the Washington Park parking lot.
  - Installation of carport underside lighting.
  - Support to execute the utility interconnection agreement.
  - Installation of data acquisition system to provide system performance monitoring.
  - Provide ADA stall restripes for stall under proposed solar PV carport and path-of-travel (POT) linkage from said stall to nearest existing ADA POT.

  Scope of work excludes:

  - Upgrades, repairs, parking lot restriping, ADA improvements (unless mentioned), or additional work not associated with the solar PV Carport installation but required to bring existing undisclosed or unforeseen ADA and/or electrical deficiencies up to the current code.

Attachment "B"
Solar Installation

SYSTEM LOCATION AND DESCRIPTION:

City of Escondido					
1. Site Location	*Central Plant Meter #1*	*Central Plant Meter #2*	*City Hall*	*Concert Hall*	*Conference Center*
2. Point of Interconnection	*Meter # 6584826*	*Meter # 6701453*	*Meter # 6697071*	*Meter # 6688044*	*Meter # 6577721*
3. PV System Size	*123.1 kW$_{DC}$*	*272.1 kW$_{DC}$*	*346.6 kW$_{DC}$*	*298.0 kW$_{DC}$*	*99.9 kW$_{DC}$*
4. PV Modules	*Silfab SIL-540-XM or Equal*	*Silfab SIL-540-XM or Equal*	*Silfab SIL-540-XM or Equal*	*Silfab SIL-540-XM or Equal*	*Silfab SIL-540-XM or Equal*
5. PV Inverters	*Solectria PVI or Equal*	*Solectria PVI or Equal*	*Solectria PVI or Equal*	*Solectria PVI or Equal*	*Solectria PVI or Equal*
6. PV System	*Solar Carport Structure 13' 6" Clear Height*	*Solar Carport Structure 13' 6" Clear Height*	*Solar Carport Structure 13' 6" Clear Height*	*Solar Carport Structure 13' 6" Clear Height*	*Solar Carport Structure 13' 6" Clear Height*
7. EV Chargers	*N/A*		*(2) Dual and (1) Single Port EV Chargers 80A/Port or Equal*	*(3) Dual and (2) Single Port EV Chargers 80A/Port or Equal*	*(1) Dual and (1) Single Port EV Chargers 80A/Port or Equal*

City of Escondido					
1. Site Location	*James Stone Pool*	*Library*	*Museum*	*PACC*	*Theater*
2. Point of Interconnection	*Meter # 6507715*	*Meter # 6839229*	*Meter # 6584264*	*Meter # 6693027*	*Meter # 6694879*
3. System Size	*46.9 kW$_{DC}$*	*175.0 kW$_{DC}$*	*162.0 kW$_{DC}$*	*71.2 kW$_{DC}$*	*136.0 kWdc*
4. PV Modules	*Silfab SIL-540-XM or Equal*	*Silfab SIL-540-XM or Equal*	*Silfab SIL-540-XM or Equal*	*Silfab SIL-540-XM or Equal*	*Silfab SIL-540-XM or Equal*
5. Inverters	*Solectria PVI or Equal*	*Solectria PVI or Equal*	*Solectria PVI or Equal*	*Solectria PVI or Equal*	*Solectria PVI or Equal*
6. System	*Solar Carport Structure 13' 6" Clear Height*	*Solar Carport Structure 13' 6" Clear Height*	*Solar Carport Structure 13' 6" Clear Height*	*Solar Carport Structure 13' 6" Clear Height*	*Solar Carport Structure 13' 6" Clear Height*
7. EV Chargers	*N/A*	*(2) Single Port EV Chargers 80A/Port or Equal*	*N/A*	*(1) Dual and (2) Single Port EV Chargers 80A/Port or Equal*	*N/A*

The information presented in the table above is subject to adjustment depending on final design and sitting.

Siting locations are dependent on final survey results for underground utilities and easements.

SYSTEM LOCATION AND DESCRIPTION (Continued):

City of Escondido					
1. Site Location	*Washington Park*	*Francis Ryan Park*	*Grove Park*	*Jesmond Dene Park*	*Kit Carson Park Adult Softball*
2. Point of Interconnection	*Meter # 6583033*	*Meter # 6584404*	*Meter # 6487625*	*Meter # 6769031*	*Meter # 6807524*
3. System Size	*77.8 kWdc*	*N/A*			
4. PV Modules	*Silfab SIL-540-XM or Equal*				
5. Inverters	*Solectria PVI or Equal*				
6. System	*Solar Carport Structure 13' 6" Clear Height*				
7. EV Chargers	*(1) Dual and (1) Single Port EV Chargers 50A/Port or Equal*	*(2) Dual and (1) Single Port EV Chargers 50A/Port or Equal*	*(2) Dual and (1) Single Port EV Chargers 50A/Port or Equal*	*(2) Dual and (1) Single Port EV Chargers 50A/Port or Equal*	*(2) Dual and (1) Single Port EV Chargers 50A/Port or Equal*

City of Escondido				
1. Site Location	*Kit Carson Park Arroyo RR*	*Kit Carson Park Sports Center*	*Kit Carson Park Tennis Courts*	*Public Works Yard*
2. Point of Interconnection	*Meter # 6622779*	*Meter # 6700938*	*Meter # 6576493*	*Meter # 6849869*
3. EV Chargers	*(2) Dual and (1) Single Port EV Chargers 50A/Port or Equal*	*(2) Dual and (1) Single Port EV Chargers 50A/Port or Equal*	*(2) Dual and (1) Single Port EV Chargers 50A/Port or Equal*	*(5) Dual Port EV Chargers 80A/Port or Equal*

The information presented in the table above is subject to adjustment depending on final design and siting. Siting locations are dependent on the final survey results for underground utilities and easements.

1. *Permits and Regulatory Fees*

An allowance for building, fire and electrical permits only is included for $291,172.00. This amount includes City permitting, fire review, and utility application fees for all sites. All other permits/approvals are excluded.

Climatec LLC includes durations of 16 weeks for procuring permits and regulatory approvals. Climatec LLC will not be responsible for construction delays caused by permit and approval requirements from local jurisdictions or regulatory review bodies. Any delays in procuring permits will entitle Climatec LLC a time extension change order to the Contract as a day for day extension to our plan for obtaining required permits and/or approvals, as defined above or in the project schedule.

2. *Utility Requirements*

The solar and EV Charger scope assumes all utility-owned electrical equipment serving the sites electrical distribution system has adequate capacity to handle the photovoltaic system output. No utility required electrical equipment upgrade or replacement is included in this scope, including design and coordination thereof.

Any costs associated with unforeseen utility interconnection requirements, including but not limited to utility-owned equipment upgrades or additions, relay protection equipment external to the inverters, system impact studies, or telemetry requirements and interconnection studies are not included in this scope.

3. *Facility Equipment*

The existing panels are assumed to have provisions to accept cable connections on the primary side of the main service breaker, or adequate space and capacity for a new breaker. Panel or bus bar reconfiguration and/or City distribution equipment re- listing certification is not included.

Contract excludes Short-Circuit Coordination Study for this project. Climatec LLC will provide overcurrent settings that will be coordinated with City overcurrent settings.

The solar and EV Charger scope assumes current switchboards / panelboards meet all code requirements.

Solar system includes all standard interconnection related equipment on the City side of the meter, including panel circuit breakers, utility, and/or visible utility lockable disconnect switches, solar metering, conduit, and wiring. Additional protection or upgrades required by the utilities above that provided by the certified inverters is not included.

4. *Shading*

The solar and EV charger scope design is based on existing visual conditions on site. Removal of trees or other obstructions to install the solar arrays and system components is included in this scope. Trees and/or other obstructions subsequently identified for removal or trimming by the City must be removed or trimmed, or performance expectations/guarantees will require adjustment.

5. *Commissioning*

The solar and EV charger scope assumes commissioning requirements for the solar and EV charger scope only.

6. *Monitoring*

Solar monitoring will be accomplished via cell card. Energy Management System Integration or similar control or SCADA system integrations to the new photovoltaic array(s) is excluded. All other communication and low voltage infrastructure is excluded.

7. *Site Embedding Conditions Assumed*

A normal embedded depth of 11 feet is assumed. If additional width, embedded depth or spread footing is needed due to soil conditions, additional costs will be the responsibility of the client.

8. *Storage*

City shall provide Climatec LLC with an area for storage space located near the site for storage of materials, tools and equipment, and other purposes.

9. *Exclusions*

ADA.

Scope excludes modification requirements for accessibility upgrades and accessibility design around the photovoltaic parking canopy structures (unless otherwise mentioned in scope document). Assumes that the current parking lot layout has been reviewed and approved by the Authority Having Jurisdiction (AHJ). If the architect of record recommends addition of new accessible parking stalls under the solar canopies, changed path of travel and/or new canopies over existing accessible stalls, design and construction costs will be addressed via Change Order.

Irrigation.

Irrigation reconfiguration if necessary to complete any foundation construction is not included.

Fire.

Fire hydrant flow tests or installation of a new fire hydrant are not included.

CITY OF ESCONDIDO

Central Plant Meter #1 | Solar: 123.1 kW_{DC}

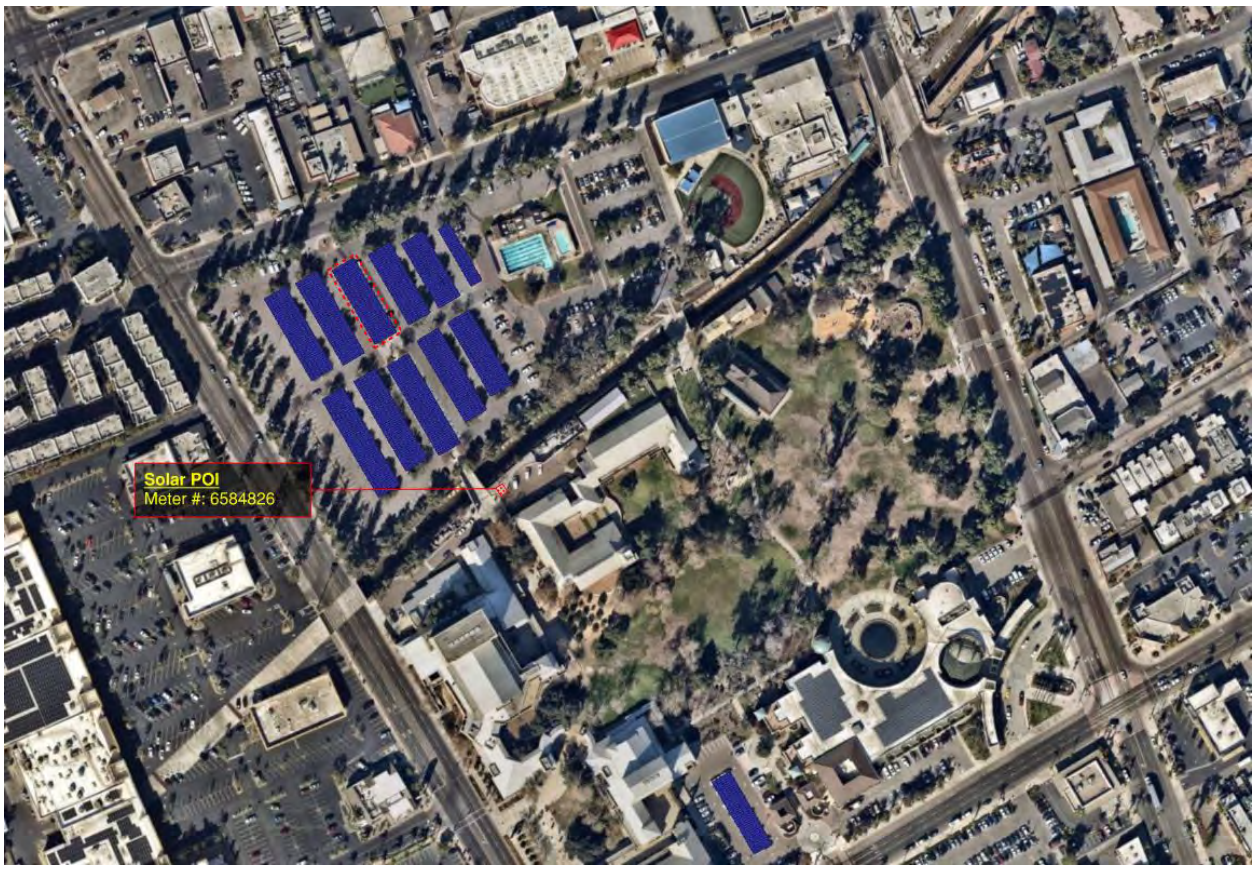

CITY OF ESCONDIDO

Central Plant Meter #2 | Solar: 272.1 kW_{DC}

CITY OF ESCONDIDO

City Hall | Solar: 346.6 kW_{DC} | Level 2 EV Chargers (80A/Port) - (1) Single Port & (2) Dual Port

CITY OF ESCONDIDO

Concert Hall | Solar: 298.0 kW_{DC} | Level 2 EV Chargers (80A/Port) - (2) Single Port & (3) Dual Port

CITY OF ESCONDIDO

Conference Center | Solar: 99.9 kW_{DC} | Level 2 EV Chargers (80A/Port) - (1) Single Port & (1) Dual Port

CITY OF ESCONDIDO

James Stone Pool | Solar: 46.9 kW_{DC}

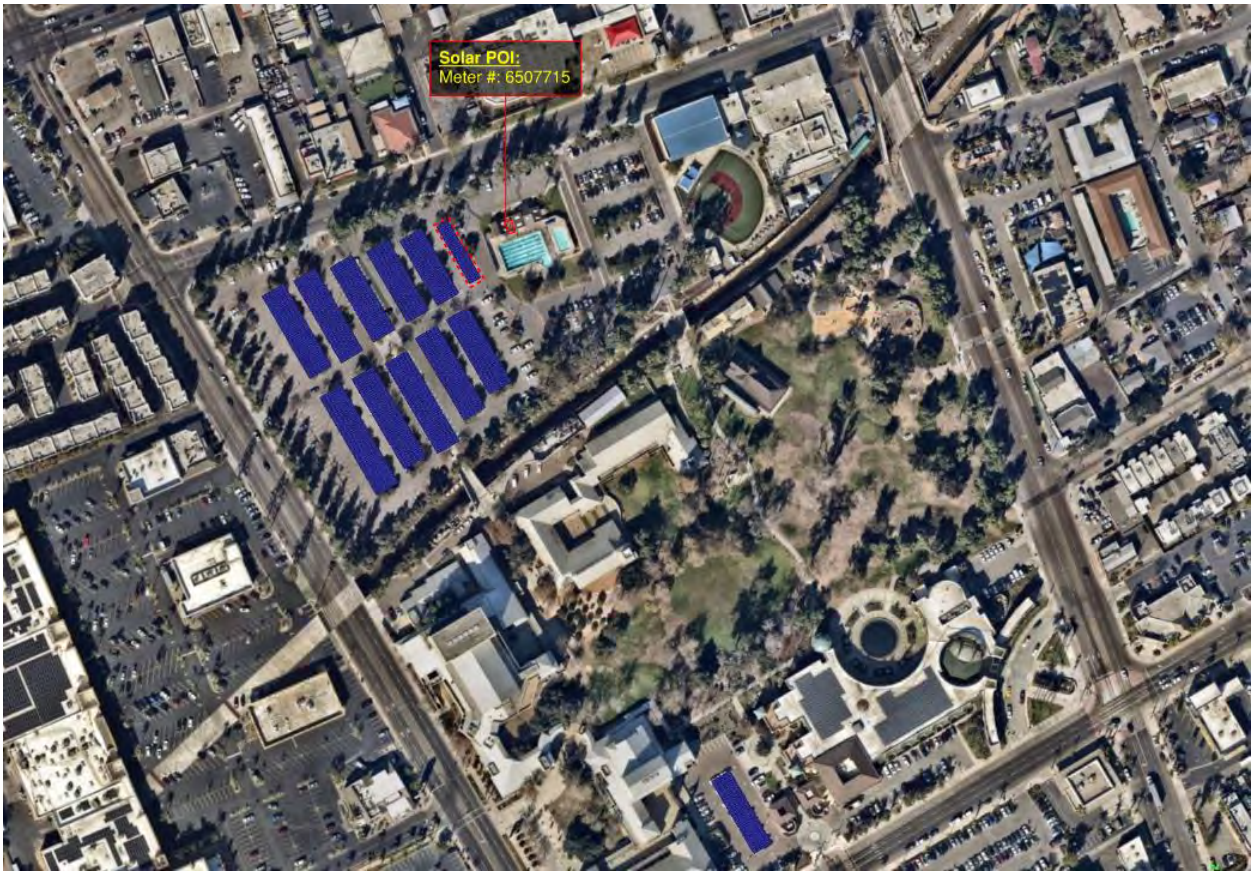

CITY OF ESCONDIDO

Library | Solar: 175.0 kW_{DC} | Level 2 EV Chargers (80A/Port) - (2) Single Port

CITY OF ESCONDIDO

Museum | Solar: 162.0 kW_{DC}

CITY OF ESCONDIDO

PACC | Solar: 71.2 kW_{DC} | Level 2 EV Chargers (80A/Port) - (2) Single Port & (1) Dual Port

CITY OF ESCONDIDO

Theater | Solar: 136.0 kW_{DC}

CITY OF ESCONDIDO

Washington Park | Solar: 77.8 kW_{DC} | Level 2 EV Chargers (80A/Port) - (1) Single Port & (1) Dual Port

CITY OF ESCONDIDO

Francis Ryan Park | Level 2 EV Chargers (50A/Port) - (1) Single Port & (2) Dual Port

CITY OF ESCONDIDO

Grove Park | Level 2 EV Chargers (50A/Port) - (1) Single Port & (2) Dual Port

CITY OF ESCONDIDO

Jesmond Dene Park | Level 2 EV Chargers (50A/Port) - (1) Single Port & (2) Dual Port

CITY OF ESCONDIDO

Kit Carson Park – Adult Softball | Level 2 EV Chargers (50A/Port) - (1) Single Port & (2) Dual Port

CITY OF ESCONDIDO

Kit Carson Park – Arroyo RR | Level 2 EV Chargers (50A/Port) - (1) Single Port & (2) Dual Port

CITY OF ESCONDIDO

Kit Carson Park – Sports Center | Level 2 EV Chargers (50A/Port) - (1) Single Port & (2) Dual Port

CITY OF ESCONDIDO

Kit Carson Park – Tennis Courts | Level 2 EV Chargers (50A/Port) - (1) Single Port & (2) Dual Port

CITY OF ESCONDIDO

Public Works Yard | Level 2 EV Chargers (80A/Port) - (5) Dual Port

Attachment "C"

Lighting Summary

City of Escondido - Lighting Detail Report

(sorted by building, floor, area)

City Hall & CCAE -

PRE-RETROFIT			POST RETROFIT	
Location	**Existing Fixture Description**	**Qty**	**Retrofit Code Description (Ltg Control in RED)**	**Qty**
Building/Area: Center Theater				
1st Floor				
Rf#-36 Rm - Back Stage	1x4x 2L sm strip, F32T8 32w, electronic ballast	18	RLT842dw - (2) 4' LED T8 lamp 10.5w, Type B, direct wire, 50,000-Hr L70 rated life, remove existing ballast from service	18
Rf#-37 Rm - Loading Dock	2x4x 3L rec trf, F32T8 32w, electronic ballast	2	RLT843dw - (3) 4' LED T8 lamp 10.5w, Type B, direct wire, 50,000-Hr L70 rated life, remove existing ballast from service	2
Rf#-38 Rm - Scene Shop	MH 1L pm high bay, MH 400W, HID ballast	4	NL150/hb/s - New LED area interior high bay, 75,000-Hr L70 rated life, lens, 120w, dimming capable (ALE) oemB	4
Rf#-39 Rm - Terrace Walk	CF 2L wm square, CFP-13W, CF ballast	5	RL012/fkit - (1) LED 3"x6" module 12w, 120/277, 50,000-Hr L70 rated life, remove ballast from service	5
Rf#-40 Rm - T201 Engineering	1x4 1L Strip, F32T8 32w, electronic ballast	4	RLT841dw - (1) 4' LED T8 lamp 10.5w, Type B, direct wire, 50,000-Hr L70 rated life, remove existing ballast from service	4
Rf#-41 Rm - South Stairs	CF 1L wm rec step light, CFP-5w TT 2700K, CF ballast	6	RL061/h/sk - (1) LED 2 pin lamp, direct wire, Gx23 base, 120/277v, 6w, 50,000-Hr L70 rated life, (1) new lamp socket	6
Rf#-42 Rm - Ext - Wall Mount	CF 2L wm square, CFP-13W, CF ballast	5	RL012/fkit - (1) LED 3"x6" module 12w, 120/277, 50,000-Hr L70 rated life, remove ballast from service	5
Rf#-43 Rm - Walkway Niche	CF 1L socket, CFP-26w, CF ballast	20	RL0111/h/sk - (1) LED 4 pin lamp, direct wire, 120/277v, 11w, 50,000-Hr L70 rated life, horizontal, (1) new lamp holder	20
Rf#-44 Rm - Walkway	CF 1L socket pm E26, CFS-15w, CF ballast	3	RL091/s - (1) LED 8.5w A19 screw in lamp, 4000K	3
2nd Floor				
Rf#-45 Rm - WRR	1x4x 2L rec trf, F32T8 32w, electronic ballast	12	RLT842dw - (2) 4' LED T8 lamp 10.5w, Type B, direct wire, 50,000-Hr L70 rated life, remove existing ballast from service	12
Rf#-46 Rm - Ext Terrace	CF 2L wm square, CFP-13W, CF ballast	6	RL012/fkit - (1) LED 3"x6" module 12w, 120/277, 50,000-Hr L70 rated life, remove ballast from service	6
Rf#-47 Rm - Newhall RR	1x4 1L Strip, F32T8 32w, electronic ballast	2	RLT841dw - (1) 4' LED T8 lamp 10.5w, Type B, direct wire, 50,000-Hr L70 rated life, remove existing ballast from service	2
Level B				
Rf#-31 Rm - Lobby	1x4x 1L sm strip (cove), F32T8 32w, electronic ballast	8	RLT841dw - (1) 4' LED T8 lamp 10.5w, Type B, direct wire, 50,000-Hr L70 rated life, remove existing ballast from service	8
Rf#-32 Rm - MRR	1x4 1L Strip, F32T8 32w, electronic ballast	8	RLT841dw - (1) 4' LED T8 lamp 10.5w, Type B, direct wire, 50,000-Hr L70 rated life, remove existing ballast from service	8
Rf#-33 Rm - WRR	1x4 1L Strip, F32T8 32w, electronic ballast	8	RLT841dw - (1) 4' LED T8 lamp 10.5w, Type B, direct wire, 50,000-Hr L70 rated life, remove existing ballast from service	8
Rf#-34 Rm - Office Mgr	1x4x 1L sm strip (cove), F32T8 32w, electronic ballast	4	RLT841dw - (1) 4' LED T8 lamp 10.5w, Type B, direct wire, 50,000-Hr L70 rated life, remove existing ballast from service	4
Rf#-35 Rm - Elevator Lobby	1x4x 2L rec trf, F32T8 32w, electronic ballast	1	RLT842dw - (2) 4' LED T8 lamp 10.5w, Type B, direct wire, 50,000-Hr L70 rated life, remove existing ballast from service	1
Building/Area: Central Plant				
1st Floor				
Rf#-86 Rm - Boiler	1x4x 2L sm ind hood, FP54T5 HO 54w, electronic ballast HO	8	RLT542Hdw - (2) 4' LED T5HO lamp 25w, Type B, direct wire, 50,000-Hr L70 rated life, remove existing ballast from service	8
Rf#-87 Rm - Ext - Wall Mount	MH 1L wm wall pack, MH 100W, HID ballast	5	NL028/wp/ft - New LED wall pack (FT), 50,000-Hr L70 rated life, 28w (MAX)	5
Building/Area: City Hall				
1st Floor				
Rf#-1 Rm - Buidling Office	CF 3L pm fxt, CFP-13W 2 pin, CF ballast	12	RL063/h - (1) LED 2 pin lamp, direct wire, Gx23 base, 120/277v, 6w, 50,000-Hr L70 rated life	12
Rf#-2 Rm - Back Hall	CF 3L pm fxt, CFP-13W 2 pin, CF ballast	16	RL063/h - (1) LED 2 pin lamp, direct wire, Gx23 base, 120/277v, 6w, 50,000-Hr L70 rated life	16
Rf#-3 Rm - Engineer Hall	CF 3L pm fxt, CFP-13W 2 pin, CF ballast	18	RL063/h - (1) LED 2 pin lamp, direct wire, Gx23 base, 120/277v, 6w, 50,000-Hr L70 rated life	18
Rf#-4 Rm - South Hall	CF 3L pm fxt, CFP-13W 2 pin, CF ballast	24	RL063/h - (1) LED 2 pin lamp, direct wire, Gx23 base, 120/277v, 6w, 50,000-Hr L70 rated life	24
Rf#-5 Rm - North Hall	CF 3L pm fxt, CFP-13W 2 pin, CF ballast	20	RL063/h - (1) LED 2 pin lamp, direct wire, Gx23 base, 120/277v, 6w, 50,000-Hr L70 rated life	20
Rf#-7 Rm - Ext - Wall Mount	CF 1L wm wall pack small, CFP-42w, CF ballast	6	NL028/wp/ft - New LED wall pack (FT), 50,000-Hr L70 rated life, 28w (MAX)	6
Rf#-8 Rm - Ext - Wall Mount	MV 1L wm wall pack large, MV 175W, HID ballast	1	NL028/wp/ft - New LED wall pack (FT), 50,000-Hr L70 rated life, 28w (MAX)	1

City Hall & CCAE -

PRE-RETROFIT			POST RETROFIT	
Location	**Existing Fixture Description**	**Qty**	**Retrofit Code Description (Ltg Control in RED)**	**Qty**
Rf#-9 Rm - Ext - Wall Mount	LED 1L fxt various (100+), LED, n/a		DND - DND: (do not do, fixtures left as is)	0
Rf#-10 Rm - All Areas	LED 2L rec can 8", LED ?w, n/a		DND - DND: (do not do, fixtures left as is)	0
Rf#-11 Rm - Ext - Small Rotunda	1x4x 1L sm strip (cove), F32T8 32w, electronic ballast	8	RLT841dw - (1) 4' LED T8 lamp 10.5w, Type B, direct wire, 50,000-Hr L70 rated life, remove existing ballast from service	8
Rf#-12 Rm - Ext - Large Dome	MH 1L uplights, MH 400w, HID ballast	8	NL100/PM/sc/s - New LED decorative lighting, pendant mounted, 100w, indirect/direct, 50,000-Hr L70 rated life oemB	8
2nd Floor				
Rf#-6 Rm - North Section	CF 3L pm fxt, CFP-13W 2 pin, CF ballast	30	RL063/h - (1) LED 2 pin lamp, direct wire, Gx23 base, 120/277v, 6w, 50,000-Hr L70 rated life	30
Building/Area: Concert Hall				
1st Floor				
Rf#-62 Rm - Roll Up Door	2x4x 3L rec trf, F32T8 32w, electronic ballast	4	RLT843dw - (3) 4' LED T8 lamp 10.5w, Type B, direct wire, 50,000-Hr L70 rated life, remove existing ballast from service	4
Rf#-63 Rm - Back Bar	1x4 1L Strip, F32T8 32w, electronic ballast	2	RLT841dw - (1) 4' LED T8 lamp 10.5w, Type B, direct wire, 50,000-Hr L70 rated life, remove existing ballast from service	2
Rf#-64 Rm - Security	2x4x 3L rec trf, F32T8 32w, electronic ballast	2	RLT843dw - (3) 4' LED T8 lamp 10.5w, Type B, direct wire, 50,000-Hr L70 rated life, remove existing ballast from service	2
Rf#-65 Rm - MRR	2x4x 3L rec trf, F32T8 32w, electronic ballast	2	RLT843dw - (3) 4' LED T8 lamp 10.5w, Type B, direct wire, 50,000-Hr L70 rated life, remove existing ballast from service	2
Rf#-66 Rm - WRR	2x4x 3L rec trf, F32T8 32w, electronic ballast	1	RLT843dw - (3) 4' LED T8 lamp 10.5w, Type B, direct wire, 50,000-Hr L70 rated life, remove existing ballast from service	1
Rf#-67 Rm - Back Stage	DND (do not do, left as is), n/a, n/a		DND - DND: (do not do, fixtures left as is)	0
Level B				
Rf#-54 Rm - Lobby Cove	1x4 1L Strip, F32T8 32w, electronic ballast	18	RLT841dw - (1) 4' LED T8 lamp 10.5w, Type B, direct wire, 50,000-Hr L70 rated life, remove existing ballast from service	18
Rf#-55 Rm - WRR	1x3x 1L sm strip, F25T8 25w, electronic ballast	24	RLT831dw - (1) 3' LED T8 lamp 12w, Type B, direct wire, 50,000-Hr L70 rated life, remove existing ballast from service	24
Rf#-56 Rm - MRR	1x3x 1L sm strip, F25T8 25w, electronic ballast	14	RLT831dw - (1) 3' LED T8 lamp 12w, Type B, direct wire, 50,000-Hr L70 rated life, remove existing ballast from service	14
Rf#-57 Rm - MRR	LED 2L rec can 8", LED, n/a	5	RL011/ckit/6t8 - (1) LED 6" rec can kit, 4000K, 11w, 120/277, 50,000-Hr L70 rated life, (1) 8" trim ring extender	5
Rf#-58 Rm - MRR	CF 2L rec can 8", CFP-26w, CF ballast	2	RL011/ckit/6t8 - (1) LED 6" rec can kit, 4000K, 11w, 120/277, 50,000-Hr L70 rated life, (1) 8" trim ring extender	2
Rf#-59 Rm - Stairs	1x4 1L Strip, F32T8 32w, electronic ballast	1	RLT841dw - (1) 4' LED T8 lamp 10.5w, Type B, direct wire, 50,000-Hr L70 rated life, remove existing ballast from service	1
Rf#-60 Rm - House Mgr	2x4x 3L rec trf, F32T8 32w, electronic ballast	1	RLT843dw - (3) 4' LED T8 lamp 10.5w, Type B, direct wire, 50,000-Hr L70 rated life, remove existing ballast from service	1
Rf#-61 Rm - Usher	2x4x 3L rec trf, F32T8 32w, electronic ballast	4	RLT843dw - (3) 4' LED T8 lamp 10.5w, Type B, direct wire, 50,000-Hr L70 rated life, remove existing ballast from service	4
Lower B				
Rf#-48 Rm - Trap Pig	1x4 1L Strip, F32T8 32w, electronic ballast	14	RLT841dw - (1) 4' LED T8 lamp 10.5w, Type B, direct wire, 50,000-Hr L70 rated life, remove existing ballast from service	14
Rf#-49 Rm - Elevator Lobby	2x2x 2L rec trf, FB31T8 32w U6, electronic ballast	2	RLT822Udw - (2) 2' LED T8 "U" lamp 15w, Type B, direct wire, 50,000-Hr L70 rated life, remove existing ballast from service (SYL)	2
Rf#-50 Rm - Ext - Loading	1x4 1L Strip, F32T8 32w, electronic ballast	2	RLT841dw - (1) 4' LED T8 lamp 10.5w, Type B, direct wire, 50,000-Hr L70 rated life, remove existing ballast from service	2
Rf#-51 Rm - Main Storage	1x4 1L Strip, F32T8 32w, electronic ballast	4	RLT841dw - (1) 4' LED T8 lamp 10.5w, Type B, direct wire, 50,000-Hr L70 rated life, remove existing ballast from service	4
Rf#-52 Rm - Main Storage	1x4x 4L pm high bay, FP54T5 HO 54w, electronic ballast HO	5	RLT544Hdw - (4) 4' LED T5HO lamp 25w, Type B, direct wire, 50,000-Hr L70 rated life, remove existing ballast from service	5
Rf#-53 Rm - WiFi	2x4x 3L rec trf, F32T8 32w, electronic ballast	4	RLT843dw - (3) 4' LED T8 lamp 10.5w, Type B, direct wire, 50,000-Hr L70 rated life, remove existing ballast from service	4
Building/Area: Conference Center				
1st Floor				
Rf#-13 Rm - Staff MRR	1x4 1L Strip, F32T8 32w, electronic ballast	6	RLT841dw - (1) 4' LED T8 lamp 10.5w, Type B, direct wire, 50,000-Hr L70 rated life, remove existing ballast from service	6
Rf#-14 Rm - Staff WRR	1x4 1L Strip, F32T8 32w, electronic ballast	12	RLT841dw - (1) 4' LED T8 lamp 10.5w, Type B, direct wire, 50,000-Hr L70 rated life, remove existing ballast from service	12

City Hall & CCAE -

PRE-RETROFIT			POST RETROFIT	
Location	Existing Fixture Description	Qty	Retrofit Code Description (Ltg Control in RED)	Qty
Rf#-15 Rm - Kitchen Storge	1x4x 2L sm ind hood, F32T8 32w, electronic ballast	3	RLT842dw - (2) 4' LED T8 lamp 10.5w, Type B, direct wire, 50,000-Hr L70 rated life, remove existing ballast from service	3
Rf#-16 Rm - Kitchen	1x4x 2L rec trf, F32T8 32w, electronic ballast	4	RLT842dw - (2) 4' LED T8 lamp 10.5w, Type B, direct wire, 50,000-Hr L70 rated life, remove existing ballast from service	4
Rf#-17 Rm - Back Hall	2x4x 3L rec trf, F32T8 32w, electronic ballast	6	RLT843dw - (3) 4' LED T8 lamp 10.5w, Type B, direct wire, 50,000-Hr L70 rated life, remove existing ballast from service	6
Rf#-18 Rm - Back Hall	2x4x 3L rec trf, LED, n/a	6	RLT843dw - (3) 4' LED T8 lamp 10.5w, Type B, direct wire, 50,000-Hr L70 rated life, remove existing ballast from service	6
Rf#-19 Rm - Cooler Lobby	1x4x 2L sm ind hood, F32T8 32w, electronic ballast	2	RLT842dw - (2) 4' LED T8 lamp 10.5w, Type B, direct wire, 50,000-Hr L70 rated life, remove existing ballast from service	2
Rf#-20 Rm - Data	2x4x 3L rec trf, F32T8 32w, electronic ballast	1	RLT843dw - (3) 4' LED T8 lamp 10.5w, Type B, direct wire, 50,000-Hr L70 rated life, remove existing ballast from service	1
Rf#-21 Rm - Data	2x4x 3L rec trf, LED, n/a	1	RLT843dw - (3) 4' LED T8 lamp 10.5w, Type B, direct wire, 50,000-Hr L70 rated life, remove existing ballast from service	1
Rf#-22 Rm - Drinks Storage	1x4x 2L sm ind hood, F32T8 32w, electronic ballast	1	RLT842dw - (2) 4' LED T8 lamp 10.5w, Type B, direct wire, 50,000-Hr L70 rated life, remove existing ballast from service	1
Rf#-23 Rm - Lobby Storage	2x2x 3L rec trf, F17T8 17w, electronic ballast	6	RLT823dw - (3) 2' LED T8 lamp 7w, Type B, direct wire, 50,000-Hr L70 rated life, remove existing ballast from service	6
Rf#-24 Rm - Back Bar	1x4x 2L pm fxt, F32T8 32w, electronic ballast	3	RLT842dw - (2) 4' LED T8 lamp 10.5w, Type B, direct wire, 50,000-Hr L70 rated life, remove existing ballast from service	3
Rf#-27 Rm - Ext - Wall Mount	CF 1L wm rec step light, CFP-5w TT 2700K, CF ballast	11	RL061/h/sk - (1) LED 2 pin lamp, direct wire, Gx23 base, 120/277v, 6w, 50,000-Hr L70 rated life, (1) new lamp socket	11
Rf#-28 Rm - Ext - Wall Mount	LED 1L rec step light, LED, n/a	30	DND - DND: (do not do, fixtures left as is)	30
Rf#-29 Rm - Ext - Wall Mount	CF 2L wm square, CFP-13W, CF ballast	35	RL012/fkit - (1) LED 3"x6" module 12w, 120/277, 50,000-Hr L70 rated life, remove ballast from service	35
Rf#-30 Rm - Ext - Ground Mount	LED 1L uplight for trees, LED ?w, n/a		DND - DND: (do not do, fixtures left as is)	0
2nd Floor				
Rf#-25 Rm - Engineer CC201	1x4x 2L sm ind hood, F32T8 32w, electronic ballast	10	RLT842dw - (2) 4' LED T8 lamp 10.5w, Type B, direct wire, 50,000-Hr L70 rated life, remove existing ballast from service	10
Rf#-26 Rm - Escondido Room	1x4x 1L sm strip (cove), F32T8 32w, electronic ballast	24	RLT842dwDm - (2) 4' LED T8 lamp 10.5w, Type B, direct wire, 50,000-Hr L70 rated life, remove existing ballast from service L-DS	24
Building/Area: Museum				
1st Floor				
Rf#-68 Rm - Store	2x2x 2L rec trf, FB31T8 32w U3, electronic ballast	4	RLT823Udw - (3) 2' LED T8 "U3" lamp 15w, Type B, direct wire, 50,000-Hr L70 rated life, remove existing ballast from service (SYL)	4
Rf#-69 Rm - RR Lobby	2x2x 2L rec trf, FB31T8 32w U3, electronic ballast	3	RLT823Udw - (3) 2' LED T8 "U3" lamp 15w, Type B, direct wire, 50,000-Hr L70 rated life, remove existing ballast from service (SYL)	3
Rf#-70 Rm - Offices	2x2x 2L rec trf, FB31T8 32w U3, electronic ballast	24	RLT823Udw - (3) 2' LED T8 "U3" lamp 15w, Type B, direct wire, 50,000-Hr L70 rated life, remove existing ballast from service (SYL)	24
Rf#-71 Rm - Register Storage	1x4x 2L sm ind hood, F32T8 32w, electronic ballast	12	RLT842dw - (2) 4' LED T8 lamp 10.5w, Type B, direct wire, 50,000-Hr L70 rated life, remove existing ballast from service	12
Rf#-72 Rm - Hall	2x4x 2L rec trf, F32T8 32w, electronic ballast	4	RLT842dw - (2) 4' LED T8 lamp 10.5w, Type B, direct wire, 50,000-Hr L70 rated life, remove existing ballast from service	4
Rf#-73 Rm - Preparation	1x4x 2L sm ind hood, F32T8 32w, electronic ballast	12	RLT842dw - (2) 4' LED T8 lamp 10.5w, Type B, direct wire, 50,000-Hr L70 rated life, remove existing ballast from service	12
Rf#-74 Rm - Storage	1x4 1L Strip, F32T8 32w, electronic ballast	1	RLT841dw - (1) 4' LED T8 lamp 10.5w, Type B, direct wire, 50,000-Hr L70 rated life, remove existing ballast from service	1
Rf#-75 Rm - Loading Dock	1x4x 2L sm ind hood, F32T8 32w, electronic ballast	6	RLT842dw - (2) 4' LED T8 lamp 10.5w, Type B, direct wire, 50,000-Hr L70 rated life, remove existing ballast from service	6
Rf#-76 Rm - Crate Storage	1x4 1L Strip, F32T8 32w, electronic ballast	8	RLT841dw - (1) 4' LED T8 lamp 10.5w, Type B, direct wire, 50,000-Hr L70 rated life, remove existing ballast from service	8
Rf#-77 Rm - Ext - Wall Mount	CF 1L wm jelly jar, CFP-13W 2 pin, CF ballast	8	RL091/s/sk - (1) LED 8.5w A19 screw in lamp, 4000K, (1) new lamp socket	8
Building/Area: Studio				
1st Floor				
Rf#-78 Rm - Walkway Niche	CF 1L socket, CFP-26w, CF ballast	12	RL0111/h/sk - (1) LED 4 pin lamp, direct wire, 120/277v, 11w, 50,000-Hr L70 rated life, horizontal, (1) new lamp holder	12
Rf#-79 Rm - Walkway	1x4x 2L sm vapor tight, F32T8 32w, electronic ballast	7	RLT842dw - (2) 4' LED T8 lamp 10.5w, Type B, direct wire, 50,000-Hr L70 rated life, remove existing ballast from service	7

City Hall & CCAE -

PRE-RETROFIT			POST RETROFIT	
Location	Existing Fixture Description	Qty	Retrofit Code Description (Ltg Control in RED)	Qty
Rf#-80 Rm - Walkway	CF 1L sm sqaure 12", CFP-13W, CF ballast	12	RL012/fkit - (1) LED 3"x6" module 12w, 120/277, 50,000-Hr L70 rated life, remove ballast from service	12
Rf#-81 Rm - Walkway	1x4 1L Strip, F32T8 32w, electronic ballast	12	RLT841dw - (1) 4' LED T8 lamp 10.5w, Type B, direct wire, 50,000-Hr L70 rated life, remove existing ballast from service	12
Rf#-82 Rm - Walkway	LED 1L rec step light, LED ?w, n/a		DND - DND: (do not do, fixtures left as is)	0
Rf#-83 Rm - MRR	1x4 1L Strip, F32T8 32w, electronic ballast	4	RLT841dw - (1) 4' LED T8 lamp 10.5w, Type B, direct wire, 50,000-Hr L70 rated life, remove existing ballast from service	4
Rf#-84 Rm - MRR	CF 2L rec can 8", CFP-26w, CF ballast	1	RL011/ckit/6t8e - (1) LED 6" rec can kit, 4000K, 11w, 120/277, 50,000-Hr L70 rated life, (1) 8" trim ring extender	1
Rf#-85 Rm - WRR	1x4 1L Strip, F32T8 32w, electronic ballast	4	RLT841dw - (1) 4' LED T8 lamp 10.5w, Type B, direct wire, 50,000-Hr L70 rated life, remove existing ballast from service	4
	Qty for City Hall & CCAE :	**678**		**678**

Daley Ranch Maintenance Facility -

PRE-RETROFIT			POST RETROFIT	
Location	**Existing Fixture Description**	**Qty**	**Retrofit Code Description (Ltg Control in RED)**	**Qty**
Building/Area: All Buildings				
1st Floor				
Rf#-1 Rm - Garage	1x4x 2L sm wp, F32T8 32w, electronic ballast	8	RLT842dw(h) - (2) 4' LED T8 lamp 10.5w, Type B, direct wire, 50,000-Hr L70 rated life, remove existing ballast from service	8
Rf#-2 Rm - All Other interior Space	DND (do not do, left as is), LED ?w, n/a		DND - DND: (do not do, fixtures left as is)	0
Rf#-3 Rm - All Exterior Space	DND (do not do, left as is), LED ?w, n/a		DND - DND: (do not do, fixtures left as is)	0
Qty for Daley Ranch Maintenance Facility :		**8**		**8**

East Valley Community Center ("EVCC") / Heritage Academy -

PRE-RETROFIT			POST RETROFIT	
Location	Existing Fixture Description	Qty	Retrofit Code Description (Ltg Control in RED)	Qty
Building/Area: Main				
1st Floor				
Rf#-1 Rm - Lobby	CF 2L rec can 8", CFP-26w, CF ballast	33	RL011/ckit/6t8e - (1) LED 6" rec can kit, 4000K, 11w, 120/277, 50,000-Hr L70 rated life, (1) 8" trim ring extender	33
Rf#-2 Rm - Lobby	CF 2L rec can 8", CFP-26w, CF ballast	19	RL011/ckit/6t8e - (1) LED 6" rec can kit, 4000K, 11w, 120/277, 50,000-Hr L70 rated life, (1) 8" trim ring extender	19
Rf#-3 Rm - Tiny Tots	CF 2L rec can 8", CFP-26w, CF ballast	3	RL011/ckit/6t8 - (1) LED 6" rec can kit, 4000K, 11w, 120/277, 50,000-Hr L70 rated life, (1) 8" trim ring extender	3
Rf#-4 Rm - Tiny Tots	CF 2L rec can 8" emr, CFP-26w, CF ballast	3	RL011/ckit/6t8e - (1) LED 6" rec can kit, 4000K, 11w, 120/277, 50,000-Hr L70 rated life, (1) 8" trim ring extender	3
Rf#-5 Rm - Tiny Tots	2x2x 3L rec trf, F17T8 17w, electronic ballast	1	RLT823dwe - (3) 2' LED T8 lamp 7w, Type B, direct wire, 50,000-Hr L70 rated life, remove existing ballast from service	1
Rf#-6 Rm - Tiny Tots	1x4x 2L rec trf, F32T8 32w, electronic ballast	1	RLT842dwe - (2) 4' LED T8 lamp 10.5w, Type B, direct wire, 50,000-Hr L70 rated life, remove existing ballast from service	1
Rf#-7 Rm - Dance	2x4x 2L rec trf, F32T8 32w, electronic ballast	4	RLT842dwe - (2) 4' LED T8 lamp 10.5w, Type B, direct wire, 50,000-Hr L70 rated life, remove existing ballast from service	4
Rf#-8 Rm - Dance	2x2x 3L rec trf, F17T8 17w, electronic ballast	1	RLT823dw - (3) 2' LED T8 lamp 7w, Type B, direct wire, 50,000-Hr L70 rated life, remove existing ballast from service	1
Rf#-9 Rm - MRR	CF 2L rec can 8", CFP-26w, CF ballast	1	RL011/ckit/6t8 - (1) LED 6" rec can kit, 4000K, 11w, 120/277, 50,000-Hr L70 rated life, (1) 8" trim ring extender	1
Rf#-10 Rm - WRR	CF 2L rec can 8", CFP-26w, CF ballast	1	RL011/ckit/6t8 - (1) LED 6" rec can kit, 4000K, 11w, 120/277, 50,000-Hr L70 rated life, (1) 8" trim ring extender	1
Rf#-11 Rm - Grove	CF 2L rec can 8", CFP-26w, CF ballast	4	RL011/ckit/6t8 - (1) LED 6" rec can kit, 4000K, 11w, 120/277, 50,000-Hr L70 rated life, (1) 8" trim ring extender	4
Rf#-12 Rm - Grove	2x4x 2L rec trf, F32T8 32w, electronic ballast	2	RLT842dwe - (2) 4' LED T8 lamp 10.5w, Type B, direct wire, 50,000-Hr L70 rated life, remove existing ballast from service	2
Rf#-13 Rm - Main Hall	CF 2L rec can 8", CFP-26w, CF ballast	4	RL011/ckit/6t8 - (1) LED 6" rec can kit, 4000K, 11w, 120/277, 50,000-Hr L70 rated life, (1) 8" trim ring extender	4
Rf#-14 Rm - Main Hall	2x2x 3L rec trf, F17T8 17w, electronic ballast	6	RLT823dw - (3) 2' LED T8 lamp 7w, Type B, direct wire, 50,000-Hr L70 rated life, remove existing ballast from service	6
Rf#-15 Rm - Vineyard	CF 2L rec can 8", CFP-26w, CF ballast	4	RL011/ckit/6t8 - (1) LED 6" rec can kit, 4000K, 11w, 120/277, 50,000-Hr L70 rated life, (1) 8" trim ring extender	4
Rf#-16 Rm - Vineyard	2x4x 2L rec trf, F32T8 32w, electronic ballast	4	RLT842dw - (2) 4' LED T8 lamp 10.5w, Type B, direct wire, 50,000-Hr L70 rated life, remove existing ballast from service	4
Rf#-17 Rm - South Hall	CF 2L rec can 8", CFP-26w, CF ballast	1	RL011/ckit/6t8 - (1) LED 6" rec can kit, 4000K, 11w, 120/277, 50,000-Hr L70 rated life, (1) 8" trim ring extender	1
Rf#-18 Rm - South Hall	2x4x 2L rec trf, F32T8 32w, electronic ballast	1	RLT842dw - (2) 4' LED T8 lamp 10.5w, Type B, direct wire, 50,000-Hr L70 rated life, remove existing ballast from service	1
Rf#-19 Rm - Citrus	CF 2L rec can 8", CFP-26w, CF ballast	4	RL011/ckit/6t8 - (1) LED 6" rec can kit, 4000K, 11w, 120/277, 50,000-Hr L70 rated life, (1) 8" trim ring extender	4
Rf#-20 Rm - Citrus	2x4x 2L rec trf, F32T8 32w, electronic ballast	4	RLT842dw - (2) 4' LED T8 lamp 10.5w, Type B, direct wire, 50,000-Hr L70 rated life, remove existing ballast from service	4
Rf#-21 Rm - Gym	CF 2L rec can 8", CFP-26w, CF ballast	3	RL011/ckit/6t8 - (1) LED 6" rec can kit, 4000K, 11w, 120/277, 50,000-Hr L70 rated life, (1) 8" trim ring extender	3
Rf#-22 Rm - Gym	LED 4L pm high bay, LED ?w, n/a		DND - DND: (do not do, fixtures left as is)	0
Rf#-23 Rm - WRR	CF 2L rec can 8", CFP-26w, CF ballast	5	RL011/ckit/6t8 - (1) LED 6" rec can kit, 4000K, 11w, 120/277, 50,000-Hr L70 rated life, (1) 8" trim ring extender	5
Rf#-24 Rm - WRR	CF 2L rec can 8" emr, CFP-26w, CF ballast	2	RL011/ckit/6t8e - (1) LED 6" rec can kit, 4000K, 11w, 120/277, 50,000-Hr L70 rated life, (1) 8" trim ring extender	2
Rf#-25 Rm - MRR	CF 2L rec can 8", CFP-26w, CF ballast	4	RL011/ckit/6t8 - (1) LED 6" rec can kit, 4000K, 11w, 120/277, 50,000-Hr L70 rated life, (1) 8" trim ring extender	4
Rf#-26 Rm - MRR	CF 2L rec can 8" emr, CFP-26w, CF ballast	3	RL011/ckit/6t8e - (1) LED 6" rec can kit, 4000K, 11w, 120/277, 50,000-Hr L70 rated life, (1) 8" trim ring extender	3
Rf#-27 Rm - Ext - Ceiling Mount	CF 2L wm wall pack small, CFP-26w, CF ballast	2	NL020/sq - New LED surface mnt sq., 50,000-Hr L70 rated life, 20w (ALE)	2
Rf#-28 Rm - Ext - Ceiling Mount	HPS 1L rec square, HPS 70W, HID ballast	6	NL020/sq - New LED surface mnt sq., 50,000-Hr L70 rated life, 20w (ALE)	6
Rf#-29 Rm - Ext - Wall Mount	CF 2L rec can 8", CFP-26w, CF ballast	3	RL011/ckit/6t8 - (1) LED 6" rec can kit, 4000K, 11w, 120/277, 50,000-Hr L70 rated life, (1) 8" trim ring extender	3
lley Community Center ("EVCC") / Heritage Academy :		**129**		**129**

W* = wall switch sensor; C* = ceiling sensor; E* = existing sensor, L* Dimming Control

City of Escondido - Lighting Detail Report

(sorted by building, floor, area)

Fire Station No. 1 -

PRE-RETROFIT			POST RETROFIT	
Location	**Existing Fixture Description**	**Qty**	**Retrofit Code Description (Ltg Control in RED)**	**Qty**
Building/Area: Fire Tower				
All				
Rf#-164 Rm - Various Spaces	1x4x 2L sm vapor tight (missing lens), F32T8 32w, electronic ballast	27	RLT842dw - (2) 4' LED T8 lamp 10.5w, Type B, direct wire, 50,000-Hr L70 rated life, remove existing ballast from service	27
Rf#-165 Rm - Starwell	HPS 1L wm vandal, HPS 70w, HID ballast	5	NL012/wp/rb - New LED wall pack full, 50,000-Hr L70 rated life, 12w, built in 120/277v photo cell (Rb)	5
Roof Line				
Rf#-166 Rm - Ext - Wall Mount	HPS 1L flood, trunion, HPS 400w, HID ballast	6	NL100/p/s - New LED area light, pole or bldg. mount, 50,000-Hr L70 rated life, 100w (Vly) oemB	6
Building/Area: Garage Bay Bldg				
1st Floor				
Rf#-155 Rm - Garage Bays	1x4x 2L pm strip, TLED, electronic ballast	35	RLT842dw - (2) 4' LED T8 lamp 10.5w, Type B, direct wire, 50,000-Hr L70 rated life, remove existing ballast from service	35
Rf#-156 Rm - Garage Bays	1x4x 2L pm strip emr, F32T8 32w, electronic ballast	5	RLT842dwe - (2) 4' LED T8 lamp 10.5w, Type B, direct wire, 50,000-Hr L70 rated life, remove existing ballast from service	5
Rf#-157 Rm - Mezzanine	CF 1L wm tear drop , CFP-26w, CF ballast	8	RL0111/h - (1) LED 4 pin lamp, direct wire, 120/277v, 11w, 50,000-Hr L70 rated life, horizontal	8
Rf#-158 Rm - Ext - Wall Mount	CF 1L wm wall pack small emr, CFP-32w, CF ballast	1	RL0111/he - (1) LED 4 pin lamp, direct wire, 120/277v, 11w, 50,000-Hr L70 rated life, horizontal	1
Rf#-159 Rm - Ext - Wall Mount	LPS 2L wm shoe box, LPS 90w, HID ballast	2	NL070/p/s - New LED area light, pole or bldg. mount, 50,000-Hr L70 rated life, 70w (Vly) oemB	2
Building/Area: Generator Bldg				
1st Floor				
Rf#-160 Rm - generator room	1x4x 2L sm fxt, F32T8 32w, electronic ballast	6	RLT842dw - (2) 4' LED T8 lamp 10.5w, Type B, direct wire, 50,000-Hr L70 rated life, remove existing ballast from service	6
Rf#-161 Rm - ? Room	1x4x 2L sm fxt, F32T8 32w, electronic ballast	1	RLT842dw - (2) 4' LED T8 lamp 10.5w, Type B, direct wire, 50,000-Hr L70 rated life, remove existing ballast from service	1
Rf#-162 Rm - ? Room	1x4x 2L sm box, F32T8 32w, electronic ballast	2	RLT842dw - (2) 4' LED T8 lamp 10.5w, Type B, direct wire, 50,000-Hr L70 rated life, remove existing ballast from service	2
Rf#-163 Rm - Ext - Wall Mount	CF 1L wm wall pack small, CFP-32w, CF ballast	16	RL0111/h - (1) LED 4 pin lamp, direct wire, 120/277v, 11w, 50,000-Hr L70 rated life, horizontal	16
Building/Area: Main Bldg				
1st Floor				
Rf#-1 Rm - Main entry lobby	CF 2L rec can ?", CFP-26w, CF ballast	5	RL011/ckit/6 - (1) LED 6" rec can kit, 4000K, 11w, 120/277, 50,000-Hr L70 rated life	5
Rf#-2 Rm - Main entry lobby	2x2x 3L rec trf, F17T8 17w, electronic ballast	7	RLT823dw - (3) 2' LED T8 lamp 7w, Type B, direct wire, 50,000-Hr L70 rated life, remove existing ballast from service	7
Rf#-3 Rm - Main entry lobby	2x2x 3L rec trf, LEDT8 Type A/B, electronic ballast	2	RLT823dw - (3) 2' LED T8 lamp 7w, Type B, direct wire, 50,000-Hr L70 rated life, remove existing ballast from service	2
Rf#-4 Rm - museum	CF 2L rec can ?", CFP-32w, CF ballast	11	RL011/ckit/6 - (1) LED 6" rec can kit, 4000K, 11w, 120/277, 50,000-Hr L70 rated life	11
Rf#-5 Rm - museum	MH 1L wm wall pack FCO, MH 100w, HID ballast	4	RL0341/s/sk - (1) LED 34w A21 style screw in lamp, 120/277, 50,000-Hr rated life, 5000K, mogul base, (1) new lamp socket	4
Rf#-6 Rm - museum	CF 8L pm indirect dome, Biax 40w, CF ballast	8	RL017/bx8 - (8) LED BIAX PL-L lamp, direct wire (remove old ballast), 120/277v, 15w, 50,000-Hr L70 rated life	8
Rf#-7 Rm - Bullpen desk area	2x2x 2L rec vol trf, F17T8 17w, electronic ballast	12	RL025/tkit22 - (1) LED 25w 2x2 rec trf kit w/volumetric lens 70,000-Hr L70 rated life (ALE) L-DS	12
Rf#-8 Rm - Lobby RR	CF 1L rec can ?", CFP-26w, CF ballast	3	RL011/ckit/6 - (1) LED 6" rec can kit, 4000K, 11w, 120/277, 50,000-Hr L70 rated life	3
Rf#-9 Rm - Lobby RR	CF 1L rec can ?" emr, CFP-26w, CF ballast	1	RL011/ckit/6e - (1) LED 6" rec can kit, 4000K, 11w, 120/277, 50,000-Hr L70 rated life	1
Rf#-10 Rm - Lobby RR	1x3x 2L sm strip (cove), F25T8 25w, electronic ballast	5	RLT832dw - (2) 3' LED T8 lamp 12w, Type B, direct wire, 50,000-Hr L70 rated life, remove existing ballast from service	5
Rf#-11 Rm - water heater room	1x4x 2L rec trf, F32T8 32w, electronic ballast	1	RLT842dw - (2) 4' LED T8 lamp 10.5w, Type B, direct wire, 50,000-Hr L70 rated life, remove existing ballast from service	1
Rf#-12 Rm - training room	CF 1L rec can ?", CFP-26w, CF ballast	12	RL011/ckit/6 - (1) LED 6" rec can kit, 4000K, 11w, 120/277, 50,000-Hr L70 rated life	12
Rf#-13 Rm - training room	2x2x 2L rec vol trf, F17T8 17w, electronic ballast	12	RL025/tkit22 - (1) LED 25w 2x2 rec trf kit w/volumetric lens 70,000-Hr L70 rated life (ALE) L-DS	12

City of Escondido - Lighting Detail Report

(sorted by building, floor, area)

Fire Station No. 1 -

PRE-RETROFIT			POST RETROFIT	
Location	**Existing Fixture Description**	**Qty**	**Retrofit Code Description (Ltg Control in RED)**	**Qty**
Rf#-14 Rm - back hallway	2x2x 3L rec trf, F17T8 17w, electronic ballast	9	RLT823dw - (3) 2' LED T8 lamp 7w, Type B, direct wire, 50,000-Hr L70 rated life, remove existing ballast from service	9
Rf#-15 Rm - back hallway	2x2x 3L rec trf, LEDT8 Type A/B, electronic ballast	3	RLT823dw - (3) 2' LED T8 lamp 7w, Type B, direct wire, 50,000-Hr L70 rated life, remove existing ballast from service	3
Rf#-16 Rm - Conf Room	2x2x 2L rec vol trf, F17T8 17w, electronic ballast	4	RL025/tkit22 - (1) LED 25w 2x2 rec trf kit w/volumetric lens 70,000-Hr L70 rated life (ALE) L-DS	4
Rf#-17 Rm - copy room	2x2x 2L rec vol trf, F17T8 17w, electronic ballast	4	RL025/tkit22 - (1) LED 25w 2x2 rec trf kit w/volumetric lens 70,000-Hr L70 rated life (ALE) L-DS	4
Rf#-18 Rm - Room to left of above	2x2x 2L rec vol trf, F17T8 17w, electronic ballast	4	RL025/tkit22 - (1) LED 25w 2x2 rec trf kit w/volumetric lens 70,000-Hr L70 rated life (ALE) L-DS	4
Rf#-19 Rm - T-Shirt Room	2x2x 2L rec vol trf, F17T8 17w, electronic ballast	4	RL025/tkit22 - (1) LED 25w 2x2 rec trf kit w/volumetric lens 70,000-Hr L70 rated life (ALE) L-DS	4
Rf#-20 Rm - PPE Room	2x2x 2L rec vol trf, F17T8 17w, electronic ballast	4	RL025/tkit22 - (1) LED 25w 2x2 rec trf kit w/volumetric lens 70,000-Hr L70 rated life (ALE) L-DS	4
Rf#-21 Rm - Office to Right of above	2x2x 2L rec vol trf, F17T8 17w, electronic ballast	4	RL025/tkit22 - (1) LED 25w 2x2 rec trf kit w/volumetric lens 70,000-Hr L70 rated life (ALE) L-DS	4
Rf#-22 Rm - Radio Room	2x2x 2L rec vol trf, F17T8 17w, electronic ballast	4	RL025/tkit22 - (1) LED 25w 2x2 rec trf kit w/volumetric lens 70,000-Hr L70 rated life (ALE) L-DS	4
Rf#-23 Rm - 911 backup room	2x2x 2L rec vol trf, F17T8 17w, electronic ballast	4	RL025/tkit22 - (1) LED 25w 2x2 rec trf kit w/volumetric lens 70,000-Hr L70 rated life (ALE) L-DS	4
Rf#-24 Rm - Room next to above	1x4x 2L rec trf, F32T8 32w, electronic ballast	2	RLT842dw - (2) 4' LED T8 lamp 10.5w, Type B, direct wire, 50,000-Hr L70 rated life, remove existing ballast from service	2
Rf#-25 Rm - Server Room	1x4x 2L rec trf, F32T8 32w, electronic ballast	2	RLT842dw - (2) 4' LED T8 lamp 10.5w, Type B, direct wire, 50,000-Hr L70 rated life, remove existing ballast from service	2
Rf#-26 Rm - Office hallway	2x4x 3L rec trf, F32T8 32w, electronic ballast	2	RLT843dw - (3) 4' LED T8 lamp 10.5w, Type B, direct wire, 50,000-Hr L70 rated life, remove existing ballast from service	2
Rf#-27 Rm - Office #1	2x2x 2L rec vol trf, F17T8 17w, electronic ballast	4	RL025/tkit22 - (1) LED 25w 2x2 rec trf kit w/volumetric lens 70,000-Hr L70 rated life (ALE) L-DS	4
Rf#-28 Rm - Office #2	2x2x 2L rec vol trf, F17T8 17w, electronic ballast	4	RL025/tkit22 - (1) LED 25w 2x2 rec trf kit w/volumetric lens 70,000-Hr L70 rated life (ALE) L-DS	4
Rf#-29 Rm - Office #3	2x2x 2L rec vol trf, F17T8 17w, electronic ballast	4	RL025/tkit22 - (1) LED 25w 2x2 rec trf kit w/volumetric lens 70,000-Hr L70 rated life (ALE) L-DS	4
Rf#-30 Rm - Office #4	2x2x 2L rec vol trf, F17T8 17w, electronic ballast	4	RL025/tkit22 - (1) LED 25w 2x2 rec trf kit w/volumetric lens 70,000-Hr L70 rated life (ALE) L-DS	4
Rf#-31 Rm - Garage Bays	2x4x 3L rec trf, TLED, electronic ballast		DND - DND: (do not do, fixtures left as is)	0
Rf#-32 Rm - Garage Bays	1x4x 2L wm sconce, F32T8 32w, electronic ballast	4	RLT842dw - (2) 4' LED T8 lamp 10.5w, Type B, direct wire, 50,000-Hr L70 rated life, remove existing ballast from service	4
Rf#-33 Rm - Garage Bays counter area	1x3x 1L undercounter, F25T8 25w, electronic ballast	2	RLT831dw - (1) 3' LED T8 lamp 12w, Type B, direct wire, 50,000-Hr L70 rated life, remove existing ballast from service	2
Rf#-34 Rm - Garage Bays RR	1x4x 2L rec trf, F32T8 32w, electronic ballast	1	RLT842dw - (2) 4' LED T8 lamp 10.5w, Type B, direct wire, 50,000-Hr L70 rated life, remove existing ballast from service	1
Rf#-35 Rm - Garage Bays RR	CF 1L rec can ?", CFP-26w, CF ballast	1	RL011/ckit/6 - (1) LED 6" rec can kit, 4000K, 11w, 120/277, 50,000-Hr L70 rated life	1
Rf#-36 Rm - hallway to back stairs landing	CF 1L rec can ?", CFP-26w, CF ballast	4	RL011/ckit/6 - (1) LED 6" rec can kit, 4000K, 11w, 120/277, 50,000-Hr L70 rated life	4
Rf#-37 Rm - Counter area close to above	1x3x 1L undercounter, F25T8 25w, electronic ballast	3	RLT831dw - (1) 3' LED T8 lamp 12w, Type B, direct wire, 50,000-Hr L70 rated life, remove existing ballast from service	3
Rf#-38 Rm - ? Room	1x4x 2L rec trf, F32T8 32w, electronic ballast	4	RLT842dw - (2) 4' LED T8 lamp 10.5w, Type B, direct wire, 50,000-Hr L70 rated life, remove existing ballast from service	4
Rf#-39 Rm - Back lobby area by stairs	CF 1L rec can ?", CFP-32w, CF ballast	4	RL011/ckit/6 - (1) LED 6" rec can kit, 4000K, 11w, 120/277, 50,000-Hr L70 rated life	4
Rf#-40 Rm - ? Room #1	CF 1L rec can ?", CFP-32w, CF ballast	14	RL011/ckit/6 - (1) LED 6" rec can kit, 4000K, 11w, 120/277, 50,000-Hr L70 rated life	14
Rf#-41 Rm - ? Room #1	Inc. 1L rec can ?" emr, Inc. 1L MR16 35w, n/a	3	RL061/s/mr16 - (1) LED 6w MR16 lamp, 4000K	3
Rf#-42 Rm - ? Room #2 in this area	1x4x 2L rec trf, F32T8 32w, electronic ballast	2	RLT842dw - (2) 4' LED T8 lamp 10.5w, Type B, direct wire, 50,000-Hr L70 rated life, remove existing ballast from service	2
Rf#-43 Rm - kitchen hallway	2x2x 2L rec vol trf, F17T8 17w, electronic ballast	5	RL025/tkit22 - (1) LED 25w 2x2 rec trf kit w/volumetric lens 70,000-Hr L70 rated life (ALE)	5
Rf#-44 Rm - kitchen hallway	2x2x 2L rec vol trf emr, F17T8 17w, electronic ballast	1	RL025/tkit22 - (1) LED 25w 2x2 rec trf kit w/volumetric lens 70,000-Hr L70 rated life (ALE)	1
Rf#-45 Rm - ? Room	CF 1L rec can ?", CFP-26w, CF ballast	1	RL011/ckit/6 - (1) LED 6" rec can kit, 4000K, 11w, 120/277, 50,000-Hr L70 rated life	1

W* = wall switch sensor; C* = ceiling sensor; E* = existing sensor, L* Dimming Control

Fire Station No. 1 -

PRE-RETROFIT			POST RETROFIT	
Location	Existing Fixture Description	Qty	Retrofit Code Description (Ltg Control in RED)	Qty
Rf#-46 Rm - janitor closet	1x4x 2L rec trf, F32T8 32w, electronic ballast	1	RLT842dw - (2) 4' LED T8 lamp 10.5w, Type B, direct wire, 50,000-Hr L70 rated life, remove existing ballast from service	1
Rf#-47 Rm - TV Room	CF 1L rec can, CFP-26w, CF ballast dimming	14	RL011/ckit/6bt - (1) LED 6" rec can kit, 4000K, 11w, 120/277, 50,000-Hr L70 rated life L-DS	14
Rf#-48 Rm - TV Room	CF 1L rec can emr, CFP-26w, CF ballast dimming	4	RL011/ckit/6bte - (1) LED 6" rec can kit, 4000K, 11w, 120/277, 50,000-Hr L70 rated life L-DS	4
Rf#-49 Rm - TV Room	Inc. 1L rec can, Inc. 1L MR16 35w, n/a	3	RL061/s/mr16 - (1) LED 6w MR16 lamp, 4000K	3
Rf#-50 Rm - dinning area	CF 1L rec can, CFP-26w, CF ballast	14	RL011/ckit/6 - (1) LED 6" rec can kit, 4000K, 11w, 120/277, 50,000-Hr L70 rated life	14
Rf#-51 Rm - dinning area	CF 1L rec can emr, CFP-26w, CF ballast	3	RL011/ckit/6e - (1) LED 6" rec can kit, 4000K, 11w, 120/277, 50,000-Hr L70 rated life	3
Rf#-52 Rm - dinning area	1x3x 1L undercounter, F25T8 25w, electronic ballast	1	RLT831dw - (1) 3' LED T8 lamp 12w, Type B, direct wire, 50,000-Hr L70 rated life, remove existing ballast from service	1
Rf#-53 Rm - dinning area	1x4x 1L undercounter, F32T8 32w, electronic ballast	1	RLT841dw - (1) 4' LED T8 lamp 10.5w, Type B, direct wire, 50,000-Hr L70 rated life, remove existing ballast from service	1
Rf#-54 Rm - kitchen	2x2x 2L rec vol trf, F17T8 17w, electronic ballast	9	RL025/tkit22 - (1) LED 25w 2x2 rec trf kit w/volumetric lens 70,000-Hr L70 rated life (ALE)	9
Rf#-55 Rm - kitchen	CF 1L rec can, CFP-26w, CF ballast	2	RL011/ckit/6 - (1) LED 6" rec can kit, 4000K, 11w, 120/277, 50,000-Hr L70 rated life	2
Rf#-56 Rm - kitchen	1x3x 1L undercounter, F25T8 25w, electronic ballast	1	RLT831dw - (1) 3' LED T8 lamp 12w, Type B, direct wire, 50,000-Hr L70 rated life, remove existing ballast from service	1
Rf#-57 Rm - kitchen	1x4x 1L undercounter, F32T8 32w, electronic ballast	2	RLT841dw - (1) 4' LED T8 lamp 10.5w, Type B, direct wire, 50,000-Hr L70 rated life, remove existing ballast from service	2
Rf#-58 Rm - Dorm Room #1	2x2x 3L rec trf, F17T8 17w, electronic ballast	2	RLT823dw - (3) 2' LED T8 lamp 7w, Type B, direct wire, 50,000-Hr L70 rated life, remove existing ballast from service	2
Rf#-59 Rm - Dorm Room #1	1x3x 1L undercounter, F25T8 25w, electronic ballast	1	RLT831dw - (1) 3' LED T8 lamp 12w, Type B, direct wire, 50,000-Hr L70 rated life, remove existing ballast from service	1
Rf#-60 Rm - Dorm Room #1	CF 1L rec can, CFP-26w, CF ballast	1	RL011/ckit/6 - (1) LED 6" rec can kit, 4000K, 11w, 120/277, 50,000-Hr L70 rated life	1
Rf#-61 Rm - Dorm Room #1 RR	CF 1L rec can, CFP-26w, CF ballast	2	RL011/ckit/6 - (1) LED 6" rec can kit, 4000K, 11w, 120/277, 50,000-Hr L70 rated life	2
Rf#-62 Rm - Dorm Room #1 RR	1x3x 2L sm strip (cove), F25T8 25w, electronic ballast	1	RLT832dw - (2) 3' LED T8 lamp 12w, Type B, direct wire, 50,000-Hr L70 rated life, remove existing ballast from service	1
Rf#-63 Rm - Dorm Room #2	2x2x 3L rec trf, F17T8 17w, electronic ballast	2	RLT823dw - (3) 2' LED T8 lamp 7w, Type B, direct wire, 50,000-Hr L70 rated life, remove existing ballast from service	2
Rf#-64 Rm - Dorm Room #2	1x3x 1L undercounter, F25T8 25w, electronic ballast	1	RLT831dw - (1) 3' LED T8 lamp 12w, Type B, direct wire, 50,000-Hr L70 rated life, remove existing ballast from service	1
Rf#-65 Rm - Dorm Room #2	CF 1L rec can, CFP-26w, CF ballast	1	RL011/ckit/6 - (1) LED 6" rec can kit, 4000K, 11w, 120/277, 50,000-Hr L70 rated life	1
Rf#-66 Rm - Dorm Room #2 RR	CF 1L rec can, CFP-26w, CF ballast	2	RL011/ckit/6 - (1) LED 6" rec can kit, 4000K, 11w, 120/277, 50,000-Hr L70 rated life	2
Rf#-67 Rm - Dorm Room #2 RR	1x3x 2L sm strip (cove), F25T8 25w, electronic ballast	1	RLT832dw - (2) 3' LED T8 lamp 12w, Type B, direct wire, 50,000-Hr L70 rated life, remove existing ballast from service	1
Rf#-68 Rm - Dorm Room #1	2x2x 3L rec trf, F17T8 17w, electronic ballast	2	RLT823dw - (3) 2' LED T8 lamp 7w, Type B, direct wire, 50,000-Hr L70 rated life, remove existing ballast from service	2
Rf#-69 Rm - Dorm Room #1	1x3x 1L undercounter, F25T8 25w, electronic ballast	1	RLT831dw - (1) 3' LED T8 lamp 12w, Type B, direct wire, 50,000-Hr L70 rated life, remove existing ballast from service	1
Rf#-70 Rm - Dorm Room #1	CF 1L rec can, CFP-26w, CF ballast	1	RL011/ckit/6 - (1) LED 6" rec can kit, 4000K, 11w, 120/277, 50,000-Hr L70 rated life	1
Rf#-71 Rm - Dorm Room #1 RR	CF 1L rec can, CFP-26w, CF ballast	2	RL011/ckit/6 - (1) LED 6" rec can kit, 4000K, 11w, 120/277, 50,000-Hr L70 rated life	2
Rf#-72 Rm - Dorm Room #1 RR	1x3x 2L sm strip (cove), F25T8 25w, electronic ballast	1	RLT832dw - (2) 3' LED T8 lamp 12w, Type B, direct wire, 50,000-Hr L70 rated life, remove existing ballast from service	1
Rf#-73 Rm - Dorm Room #4	2x2x 3L rec trf, F17T8 17w, electronic ballast	2	RLT823dw - (3) 2' LED T8 lamp 7w, Type B, direct wire, 50,000-Hr L70 rated life, remove existing ballast from service	2
Rf#-74 Rm - Dorm Room #4	1x3x 1L undercounter, F25T8 25w, electronic ballast	1	RLT831dw - (1) 3' LED T8 lamp 12w, Type B, direct wire, 50,000-Hr L70 rated life, remove existing ballast from service	1
Rf#-75 Rm - Dorm Room #4	CF 1L rec can, CFP-26w, CF ballast	1	RL011/ckit/6 - (1) LED 6" rec can kit, 4000K, 11w, 120/277, 50,000-Hr L70 rated life	1
Rf#-76 Rm - Dorm Room #4 RR	CF 1L rec can, CFP-26w, CF ballast	2	RL011/ckit/6 - (1) LED 6" rec can kit, 4000K, 11w, 120/277, 50,000-Hr L70 rated life	2
Rf#-77 Rm - Dorm Room #4 RR	1x3x 2L sm strip (cove), F25T8 25w, electronic ballast	1	RLT832dw - (2) 3' LED T8 lamp 12w, Type B, direct wire, 50,000-Hr L70 rated life, remove existing ballast from service	1

W* = wall switch sensor; C* = ceiling sensor; E* = existing sensor, L* Dimming Control

Fire Station No. 1 -

PRE-RETROFIT			POST RETROFIT	
Location	Existing Fixture Description	Qty	Retrofit Code Description (Ltg Control in RED)	Qty
Rf#-78 Rm - dorm hallway	CF 1L rec can, CFP-26w, CF ballast	9	RL011/ckit/6 - (1) LED 6" rec can kit, 4000K, 11w, 120/277, 50,000-Hr L70 rated life	9
Rf#-79 Rm - All Other interior Space	DND (do not do, left as is), n/a, n/a		DND - DND: (do not do, fixtures left as is)	0
Rf#-80 Rm - Ext - Wall Mount	CF 1L wm wall pack small emr, CFP-32w, CF ballast	10	RL0111/he - (1) LED 4 pin lamp, direct wire, 120/277v, 11w, 50,000-Hr L70 rated life, horizontal	10
Rf#-81 Rm - Ext - Wall Mount	CF 1L wm wall pack small, CFP-32w, CF ballast	2	RL0111/h - (1) LED 4 pin lamp, direct wire, 120/277v, 11w, 50,000-Hr L70 rated life, horizontal	2
Rf#-82 Rm - Ext - Wall Mount	LPS 2L wm shoe box, LPS 90w, HID ballast	2	NL070/p/s - New LED area light, pole or bldg. mount, 50,000-Hr L70 rated life, 70w (Vly) oemB	2
Rf#-83 Rm - Ext - Wall Mount	Inc. 1L flood, knuckle, Halogen 300W, n/a	2	NL035/fld - New LED flood, knuckle mount, 50,000-Hr L70 rated life, 35w (Key)	2
Rf#-84 Rm - Ext - Wall Mount (2nd level)	CF 1L wm dome, CFP-32w, CF ballast	2	RL012/fkit - (1) LED 3"x6" module 12w, 120/277, 50,000-Hr L70 rated life, remove ballast from service	2
Rf#-85 Rm - Ext - Sign	1x4x 1L monument, F32T8 32w, electronic ballast	2	RLT841dw - (1) 4' LED T8 lamp 10.5w, Type B, direct wire, 50,000-Hr L70 rated life, remove existing ballast from service	2
Rf#-86 Rm - Ext - In Ground	Inc. 1L ground mount uplight, Inc. 75w Par38, n/a	12	RL091/s/R30 - (1) LED 8w R30 screw in lamp, 4000K	12
Rf#-87 Rm - Ext- Pole Mount	LPS 2L pole mnt hoe box, LPS 90w, HID ballast	14	NL070/p/s - New LED area light, pole or bldg. mount, 50,000-Hr L70 rated life, 70w (Vly) oemB	14
2nd Floor				
Rf#-88 Rm - stairwell #1 (back)	CF 1L rec can, CFP-26w, CF ballast	2	RL011/ckit/6 - (1) LED 6" rec can kit, 4000K, 11w, 120/277, 50,000-Hr L70 rated life	2
Rf#-89 Rm - Dorm Room #5	2x2x 3L rec trf, F17T8 17w, electronic ballast	1	RLT823dw - (3) 2' LED T8 lamp 7w, Type B, direct wire, 50,000-Hr L70 rated life, remove existing ballast from service	1
Rf#-90 Rm - Dorm Room #5	CF 1L rec can, CFP-26w, CF ballast	1	RL011/ckit/6 - (1) LED 6" rec can kit, 4000K, 11w, 120/277, 50,000-Hr L70 rated life	1
Rf#-91 Rm - Dorm Room #5	CF 1L wm bed light, CFP-26w, CF ballast	1	RL0111/h - (1) LED 4 pin lamp, direct wire, 120/277v, 11w, 50,000-Hr L70 rated life, horizontal	1
Rf#-92 Rm - Dorm Room #6	2x2x 3L rec trf, F17T8 17w, electronic ballast	1	RLT823dw - (3) 2' LED T8 lamp 7w, Type B, direct wire, 50,000-Hr L70 rated life, remove existing ballast from service	1
Rf#-93 Rm - Dorm Room #6	CF 1L rec can, CFP-26w, CF ballast	1	RL011/ckit/6 - (1) LED 6" rec can kit, 4000K, 11w, 120/277, 50,000-Hr L70 rated life	1
Rf#-94 Rm - Dorm Room #6	CF 1L wm bed light, CFP-26w, CF ballast	1	RL0111/h - (1) LED 4 pin lamp, direct wire, 120/277v, 11w, 50,000-Hr L70 rated life, horizontal	1
Rf#-95 Rm - Dorm Room #7	2x2x 3L rec trf, F17T8 17w, electronic ballast	1	RLT823dw - (3) 2' LED T8 lamp 7w, Type B, direct wire, 50,000-Hr L70 rated life, remove existing ballast from service	1
Rf#-96 Rm - Dorm Room #7	CF 1L rec can, CFP-26w, CF ballast	1	RL011/ckit/6 - (1) LED 6" rec can kit, 4000K, 11w, 120/277, 50,000-Hr L70 rated life	1
Rf#-97 Rm - Dorm Room #7	CF 1L wm bed light, CFP-26w, CF ballast	1	RL0111/h - (1) LED 4 pin lamp, direct wire, 120/277v, 11w, 50,000-Hr L70 rated life, horizontal	1
Rf#-98 Rm - Dorm Room #8	2x2x 3L rec trf, F17T8 17w, electronic ballast	1	RLT823dw - (3) 2' LED T8 lamp 7w, Type B, direct wire, 50,000-Hr L70 rated life, remove existing ballast from service	1
Rf#-99 Rm - Dorm Room #8	CF 1L rec can, CFP-26w, CF ballast	1	RL011/ckit/6 - (1) LED 6" rec can kit, 4000K, 11w, 120/277, 50,000-Hr L70 rated life	1
Rf#-100 Rm - Dorm Room #8	CF 1L wm bed light, CFP-26w, CF ballast	1	RL0111/h - (1) LED 4 pin lamp, direct wire, 120/277v, 11w, 50,000-Hr L70 rated life, horizontal	1
Rf#-101 Rm - Dorm Room #9	2x2x 3L rec trf, F17T8 17w, electronic ballast	1	RLT823dw - (3) 2' LED T8 lamp 7w, Type B, direct wire, 50,000-Hr L70 rated life, remove existing ballast from service	1
Rf#-102 Rm - Dorm Room #9	CF 1L rec can, CFP-26w, CF ballast	1	RL011/ckit/6 - (1) LED 6" rec can kit, 4000K, 11w, 120/277, 50,000-Hr L70 rated life	1
Rf#-103 Rm - Dorm Room #9	CF 1L wm bed light, CFP-26w, CF ballast	1	RL0111/h - (1) LED 4 pin lamp, direct wire, 120/277v, 11w, 50,000-Hr L70 rated life, horizontal	1
Rf#-104 Rm - Dorm Room #10	2x2x 3L rec trf, F17T8 17w, electronic ballast	1	RLT823dw - (3) 2' LED T8 lamp 7w, Type B, direct wire, 50,000-Hr L70 rated life, remove existing ballast from service	1
Rf#-105 Rm - Dorm Room #10	CF 1L rec can, CFP-26w, CF ballast	1	RL011/ckit/6 - (1) LED 6" rec can kit, 4000K, 11w, 120/277, 50,000-Hr L70 rated life	1
Rf#-106 Rm - Dorm Room #10	CF 1L wm bed light, CFP-26w, CF ballast	1	RL0111/h - (1) LED 4 pin lamp, direct wire, 120/277v, 11w, 50,000-Hr L70 rated life, horizontal	1
Rf#-107 Rm - Dorm Room #11	2x2x 3L rec trf, F17T8 17w, electronic ballast	1	RLT823dw - (3) 2' LED T8 lamp 7w, Type B, direct wire, 50,000-Hr L70 rated life, remove existing ballast from service	1
Rf#-108 Rm - Dorm Room #11	CF 1L rec can, CFP-26w, CF ballast	1	RL011/ckit/6 - (1) LED 6" rec can kit, 4000K, 11w, 120/277, 50,000-Hr L70 rated life	1

Fire Station No. 1 -

PRE-RETROFIT			POST RETROFIT	
Location	Existing Fixture Description	Qty	Retrofit Code Description (Ltg Control in RED)	Qty
Rf#-109 Rm - Dorm Room #11	CF 1L wm bed light, CFP-26w, CF ballast	1	RL0111/h - (1) LED 4 pin lamp, direct wire, 120/277v, 11w, 50,000-Hr L70 rated life, horizontal	1
Rf#-110 Rm - Dorm Room #12	2x2x 3L rec trf, F17T8 17w, electronic ballast	1	RLT823dw - (3) 2' LED T8 lamp 7w, Type B, direct wire, 50,000-Hr L70 rated life, remove existing ballast from service	1
Rf#-111 Rm - Dorm Room #12	CF 1L rec can, CFP-26w, CF ballast	1	RL011/ckit/6 - (1) LED 6" rec can kit, 4000K, 11w, 120/277, 50,000-Hr L70 rated life	1
Rf#-112 Rm - Dorm Room #12	CF 1L wm bed light, CFP-26w, CF ballast	1	RL0111/h - (1) LED 4 pin lamp, direct wire, 120/277v, 11w, 50,000-Hr L70 rated life, horizontal	1
Rf#-113 Rm - Dorm Room #13	2x2x 3L rec trf, F17T8 17w, electronic ballast	1	RLT823dw - (3) 2' LED T8 lamp 7w, Type B, direct wire, 50,000-Hr L70 rated life, remove existing ballast from service	1
Rf#-114 Rm - Dorm Room #13	CF 1L rec can, CFP-26w, CF ballast	1	RL011/ckit/6 - (1) LED 6" rec can kit, 4000K, 11w, 120/277, 50,000-Hr L70 rated life	1
Rf#-115 Rm - Dorm Room #13	CF 1L wm bed light, CFP-26w, CF ballast	1	RL0111/h - (1) LED 4 pin lamp, direct wire, 120/277v, 11w, 50,000-Hr L70 rated life, horizontal	1
Rf#-116 Rm - Dorm Room #14	2x2x 3L rec trf, F17T8 17w, electronic ballast	1	RLT823dw - (3) 2' LED T8 lamp 7w, Type B, direct wire, 50,000-Hr L70 rated life, remove existing ballast from service	1
Rf#-117 Rm - Dorm Room #14	CF 1L rec can, CFP-26w, CF ballast	1	RL011/ckit/6 - (1) LED 6" rec can kit, 4000K, 11w, 120/277, 50,000-Hr L70 rated life	1
Rf#-118 Rm - Dorm Room #14	CF 1L wm bed light, CFP-26w, CF ballast	1	RL0111/h - (1) LED 4 pin lamp, direct wire, 120/277v, 11w, 50,000-Hr L70 rated life, horizontal	1
Rf#-119 Rm - Dorm Room #15	2x2x 3L rec trf, F17T8 17w, electronic ballast	1	RLT823dw - (3) 2' LED T8 lamp 7w, Type B, direct wire, 50,000-Hr L70 rated life, remove existing ballast from service	1
Rf#-120 Rm - Dorm Room #15	CF 1L rec can, CFP-26w, CF ballast	1	RL011/ckit/6 - (1) LED 6" rec can kit, 4000K, 11w, 120/277, 50,000-Hr L70 rated life	1
Rf#-121 Rm - Dorm Room #15	CF 1L wm bed light, CFP-26w, CF ballast	1	RL0111/h - (1) LED 4 pin lamp, direct wire, 120/277v, 11w, 50,000-Hr L70 rated life, horizontal	1
Rf#-122 Rm - RR #1	1x3x 2L sm strip (cove), F25T8 25w, electronic ballast	2	RLT832dw - (2) 3' LED T8 lamp 12w, Type B, direct wire, 50,000-Hr L70 rated life, remove existing ballast from service	2
Rf#-123 Rm - RR #1	CF 1L rec can, CFP-26w, CF ballast	3	RL011/ckit/6 - (1) LED 6" rec can kit, 4000K, 11w, 120/277, 50,000-Hr L70 rated life	3
Rf#-124 Rm - RR #2	1x3x 2L sm strip (cove), F25T8 25w, electronic ballast	2	RLT832dw - (2) 3' LED T8 lamp 12w, Type B, direct wire, 50,000-Hr L70 rated life, remove existing ballast from service	2
Rf#-125 Rm - RR #2	CF 1L rec can, CFP-26w, CF ballast	3	RL011/ckit/6 - (1) LED 6" rec can kit, 4000K, 11w, 120/277, 50,000-Hr L70 rated life	3
Rf#-126 Rm - RR #3	1x3x 2L sm strip (cove), F25T8 25w, electronic ballast	2	RLT832dw - (2) 3' LED T8 lamp 12w, Type B, direct wire, 50,000-Hr L70 rated life, remove existing ballast from service	2
Rf#-127 Rm - RR #3	CF 1L rec can, CFP-26w, CF ballast	3	RL011/ckit/6 - (1) LED 6" rec can kit, 4000K, 11w, 120/277, 50,000-Hr L70 rated life	3
Rf#-128 Rm - RR #4	1x3x 2L sm strip (cove), F25T8 25w, electronic ballast	2	RLT832dw - (2) 3' LED T8 lamp 12w, Type B, direct wire, 50,000-Hr L70 rated life, remove existing ballast from service	2
Rf#-129 Rm - RR #4	CF 1L rec can, CFP-26w, CF ballast	3	RL011/ckit/6 - (1) LED 6" rec can kit, 4000K, 11w, 120/277, 50,000-Hr L70 rated life	3
Rf#-130 Rm - Dorm hallway	CF 1L rec can, CFP-26w, CF ballast	2	RL011/ckit/6 - (1) LED 6" rec can kit, 4000K, 11w, 120/277, 50,000-Hr L70 rated life	2
Rf#-131 Rm - Dorm hallway	CF 1L rec can, CFP-26w, CF ballast	30	RL011/ckit/6 - (1) LED 6" rec can kit, 4000K, 11w, 120/277, 50,000-Hr L70 rated life	30
Rf#-132 Rm - Dorm hallway	CF 1L rec can emr, CFP-26w, CF ballast	14	RL011/ckit/6e - (1) LED 6" rec can kit, 4000K, 11w, 120/277, 50,000-Hr L70 rated life	14
Rf#-133 Rm - Dorm hallway	CF 1L wm step light, CFP-9w, CF ballast	18	RL012/fkit - (1) LED 3"x6" module 12w, 120/277, 50,000-Hr L70 rated life, remove ballast from service	18
Rf#-134 Rm - Dorm Room #16	2x2x 3L rec trf, F17T8 17w, electronic ballast	1	RLT823dw - (3) 2' LED T8 lamp 7w, Type B, direct wire, 50,000-Hr L70 rated life, remove existing ballast from service	1
Rf#-135 Rm - Dorm Room #16	CF 1L rec can, CFP-26w, CF ballast	1	RL011/ckit/6 - (1) LED 6" rec can kit, 4000K, 11w, 120/277, 50,000-Hr L70 rated life	1
Rf#-136 Rm - Dorm Room #16	CF 1L wm bed light, CFP-26w, CF ballast	1	RL0111/h - (1) LED 4 pin lamp, direct wire, 120/277v, 11w, 50,000-Hr L70 rated life, horizontal	1
Rf#-137 Rm - Dorm Room #17	2x2x 3L rec trf, F17T8 17w, electronic ballast	1	RLT823dw - (3) 2' LED T8 lamp 7w, Type B, direct wire, 50,000-Hr L70 rated life, remove existing ballast from service	1
Rf#-138 Rm - Dorm Room #17	CF 1L rec can, CFP-26w, CF ballast	1	RL011/ckit/6 - (1) LED 6" rec can kit, 4000K, 11w, 120/277, 50,000-Hr L70 rated life	1
Rf#-139 Rm - Dorm Room #17	CF 1L wm bed light, CFP-26w, CF ballast	1	RL0111/h - (1) LED 4 pin lamp, direct wire, 120/277v, 11w, 50,000-Hr L70 rated life, horizontal	1
Rf#-140 Rm - Dorm Room #18	2x2x 3L rec trf, F17T8 17w, electronic ballast	1	RLT823dw - (3) 2' LED T8 lamp 7w, Type B, direct wire, 50,000-Hr L70 rated life, remove existing ballast from service	1

Fire Station No. 1 -

PRE-RETROFIT			POST RETROFIT	
Location	**Existing Fixture Description**	**Qty**	**Retrofit Code Description (Ltg Control in RED)**	**Qty**
Rf#-141 Rm - Dorm Room #18	CF 1L rec can, CFP-26w, CF ballast	1	RL011/ckit/6 - (1) LED 6" rec can kit, 4000K, 11w, 120/277, 50,000-Hr L70 rated life	1
Rf#-142 Rm - Dorm Room #18	CF 1L wm bed light, CFP-26w, CF ballast	1	RL0111/h - (1) LED 4 pin lamp, direct wire, 120/277v, 11w, 50,000-Hr L70 rated life, horizontal	1
Rf#-143 Rm - Dorm Room #19	2x2x 3L rec trf, F17T8 17w, electronic ballast	1	RLT823dw - (3) 2' LED T8 lamp 7w, Type B, direct wire, 50,000-Hr L70 rated life, remove existing ballast from service	1
Rf#-144 Rm - Dorm Room #19	CF 1L rec can, CFP-26w, CF ballast	1	RL011/ckit/6 - (1) LED 6" rec can kit, 4000K, 11w, 120/277, 50,000-Hr L70 rated life	1
Rf#-145 Rm - Dorm Room #19	CF 1L wm bed light, CFP-26w, CF ballast	1	RL0111/h - (1) LED 4 pin lamp, direct wire, 120/277v, 11w, 50,000-Hr L70 rated life, horizontal	1
Rf#-146 Rm - TV Room	2x2x 2L rec vol trf, F17T8 17w, electronic ballast	2	RL025/tkit22bt - (1) LED 25w 2x2 rec trf kit w/volumetric lens 70,000-Hr L70 rated life (ALE) L-DS	2
Rf#-147 Rm - ? Room	1x4x 2L rec trf, F32T8 32w, electronic ballast	1	RLT842dw - (2) 4' LED T8 lamp 10.5w, Type B, direct wire, 50,000-Hr L70 rated life, remove existing ballast from service	1
Rf#-148 Rm - RR #5	1x3x 2L sm strip (cove), F25T8 25w, electronic ballast	2	RLT832dw - (2) 3' LED T8 lamp 12w, Type B, direct wire, 50,000-Hr L70 rated life, remove existing ballast from service	2
Rf#-149 Rm - RR #5	CF 1L rec can, CFP-26w, CF ballast	3	RL011/ckit/6 - (1) LED 6" rec can kit, 4000K, 11w, 120/277, 50,000-Hr L70 rated life	3
Rf#-150 Rm - RR #6	1x3x 2L sm strip (cove), F25T8 25w, electronic ballast	2	RLT832dw - (2) 3' LED T8 lamp 12w, Type B, direct wire, 50,000-Hr L70 rated life, remove existing ballast from service	2
Rf#-151 Rm - RR #6	CF 1L rec can, CFP-26w, CF ballast	3	RL011/ckit/6 - (1) LED 6" rec can kit, 4000K, 11w, 120/277, 50,000-Hr L70 rated life	3
Rf#-152 Rm - RR #7	1x3x 2L sm strip (cove), F25T8 25w, electronic ballast	2	RLT832dw - (2) 3' LED T8 lamp 12w, Type B, direct wire, 50,000-Hr L70 rated life, remove existing ballast from service	2
Rf#-153 Rm - RR #7	CF 1L rec can, CFP-26w, CF ballast	3	RL011/ckit/6 - (1) LED 6" rec can kit, 4000K, 11w, 120/277, 50,000-Hr L70 rated life	3
Rf#-154 Rm - All Other interior Space	DND (do not do, left as is), n/a, n/a		DND - DND: (do not do, fixtures left as is)	0
	Qty for Fire Station No. 1 :	**599**		**599**

Fire Station No. 2 -

PRE-RETROFIT			POST RETROFIT	
Location	Existing Fixture Description	Qty	Retrofit Code Description (Ltg Control in RED)	Qty
Building/Area: Main				
1st Floor				
Rf#-1 Rm - Lobby	CF 2L rec can 8", CFP-26w, CF ballast	7	RL011/ckit/6t8 - (1) LED 6" rec can kit, 4000K, 11w, 120/277, 50,000-Hr L70 rated life, (1) 8" trim ring extender	7
Rf#-2 Rm - Lobby	2x4x 3L rec trf, F32T8 32w, electronic ballast	1	RLT843dw - (3) 4' LED T8 lamp 10.5w, Type B, direct wire, 50,000-Hr L70 rated life, remove existing ballast from service	1
Rf#-3 Rm - RR	1x4x 2L rec trf, F32T8 32w, electronic ballast	1	RLT842dw - (2) 4' LED T8 lamp 10.5w, Type B, direct wire, 50,000-Hr L70 rated life, remove existing ballast from service	1
Rf#-4 Rm - Hall	CF 2L rec can 8", CFP-26w, CF ballast	15	RL011/ckit/6t8 - (1) LED 6" rec can kit, 4000K, 11w, 120/277, 50,000-Hr L70 rated life, (1) 8" trim ring extender	15
Rf#-5 Rm - Hall	CF 1L rec step light, CFP-13W, CF ballast	7	RL012/fkit - (1) LED 3"x6" module 12w, 120/277, 50,000-Hr L70 rated life, remove ballast from service	7
Rf#-6 Rm - Hall	1x3x 1L rec trf, F25T8 25w, electronic ballast	1	RLT831dw - (1) 3' LED T8 lamp 12w, Type B, direct wire, 50,000-Hr L70 rated life, remove existing ballast from service	1
Rf#-7 Rm - Hall	2x4x 2L rec trf, F32T8 32w, electronic ballast	1	RLT842dw - (2) 4' LED T8 lamp 10.5w, Type B, direct wire, 50,000-Hr L70 rated life, remove existing ballast from service	1
Rf#-8 Rm - Office	1x4x 2L rec trf, F32T8 32w, electronic ballast	3	RLT842dw - (2) 4' LED T8 lamp 10.5w, Type B, direct wire, 50,000-Hr L70 rated life, remove existing ballast from service	3
Rf#-9 Rm - Furnace	1x4x 2L rec trf, LED, n/a	3	RLT842dw - (2) 4' LED T8 lamp 10.5w, Type B, direct wire, 50,000-Hr L70 rated life, remove existing ballast from service	3
Rf#-10 Rm - Clothing	1x4x 2L rec trf, LED, n/a	7	RLT842dw - (2) 4' LED T8 lamp 10.5w, Type B, direct wire, 50,000-Hr L70 rated life, remove existing ballast from service	7
Rf#-11 Rm - RR1	CF 2L rec can 8", CFP-26w, CF ballast	1	RL011/ckit/6t8 - (1) LED 6" rec can kit, 4000K, 11w, 120/277, 50,000-Hr L70 rated life, (1) 8" trim ring extender	1
Rf#-12 Rm - RR1	1x4x 2L rec trf, LED, n/a	1	RLT842dw - (2) 4' LED T8 lamp 10.5w, Type B, direct wire, 50,000-Hr L70 rated life, remove existing ballast from service	1
Rf#-13 Rm - Sleep 1	2x4x 2L rec trf, F32T8 32w, electronic ballast	1	RLT842dw - (2) 4' LED T8 lamp 10.5w, Type B, direct wire, 50,000-Hr L70 rated life, remove existing ballast from service	1
Rf#-14 Rm - Sleep 2	2x4x 2L rec trf, F32T8 32w, electronic ballast	1	RLT842dw - (2) 4' LED T8 lamp 10.5w, Type B, direct wire, 50,000-Hr L70 rated life, remove existing ballast from service	1
Rf#-15 Rm - RR2	CF 2L rec can 8", CFP-26w, CF ballast	1	RL011/ckit/6t8 - (1) LED 6" rec can kit, 4000K, 11w, 120/277, 50,000-Hr L70 rated life, (1) 8" trim ring extender	1
Rf#-16 Rm - RR2	1x4x 2L rec trf, LED, n/a	1	RLT842dw - (2) 4' LED T8 lamp 10.5w, Type B, direct wire, 50,000-Hr L70 rated life, remove existing ballast from service	1
Rf#-17 Rm - Custodian	1x4x 2L rec trf, LED, n/a	1	RLT842dw - (2) 4' LED T8 lamp 10.5w, Type B, direct wire, 50,000-Hr L70 rated life, remove existing ballast from service	1
Rf#-18 Rm - Kitchen	LED 6L pm fxt large, LED, n/a	2	DND - DND: (do not do, fixtures left as is)	2
Rf#-19 Rm - Kitchen	LED 2L sconce small, LED, n/a	4	DND - DND: (do not do, fixtures left as is)	4
Rf#-20 Rm - Kitchen	CF 2L rec can 8", CFP-26w, CF ballast	14	RL011/ckit/6t8 - (1) LED 6" rec can kit, 4000K, 11w, 120/277, 50,000-Hr L70 rated life, (1) 8" trim ring extender	14
Rf#-21 Rm - TV	2x4x 3L rec trf, F32T8 32w, electronic ballast	8	RL025/tkit24 - (1) LED 25w 2x4 rec trf kit w/volumetric lens 70,000-Hr L70 rated life (ALE) L-DS	8
Rf#-22 Rm - Bay North	CF 2L rec can 8", CFP-26w, CF ballast	1	RL011/ckit/6t8 - (1) LED 6" rec can kit, 4000K, 11w, 120/277, 50,000-Hr L70 rated life, (1) 8" trim ring extender	1
Rf#-23 Rm - Bay North	1x4x 2L rec trf, F32T8 32w, electronic ballast	28	RLT842dw - (2) 4' LED T8 lamp 10.5w, Type B, direct wire, 50,000-Hr L70 rated life, remove existing ballast from service	28
Rf#-24 Rm - Bay South	CF 2L rec can 8", CFP-26w, CF ballast	3	RL011/ckit/6t8 - (1) LED 6" rec can kit, 4000K, 11w, 120/277, 50,000-Hr L70 rated life, (1) 8" trim ring extender	3
Rf#-25 Rm - Bay South	1x4x 2L rec trf, F32T8 32w, electronic ballast	42	RLT842dw - (2) 4' LED T8 lamp 10.5w, Type B, direct wire, 50,000-Hr L70 rated life, remove existing ballast from service	42
Rf#-26 Rm - Laundry	1x4x 2L rec trf, F32T8 32w, electronic ballast	2	RLT842dw - (2) 4' LED T8 lamp 10.5w, Type B, direct wire, 50,000-Hr L70 rated life, remove existing ballast from service	2
Rf#-27 Rm - Ext - Closet	1x4x 2L rec trf, F32T8 32w, electronic ballast	1	RLT842dw - (2) 4' LED T8 lamp 10.5w, Type B, direct wire, 50,000-Hr L70 rated life, remove existing ballast from service	1
Rf#-28 Rm - Ext - Electrical	1x4x 2L rec trf, F32T8 32w, electronic ballast	3	RLT842dw - (2) 4' LED T8 lamp 10.5w, Type B, direct wire, 50,000-Hr L70 rated life, remove existing ballast from service	3
Rf#-29 Rm - Ext - Closet	1x4x 2L rec trf, F32T8 32w, electronic ballast	3	RLT842dw - (2) 4' LED T8 lamp 10.5w, Type B, direct wire, 50,000-Hr L70 rated life, remove existing ballast from service	3
Rf#-30 Rm - Garage	1x4x 2L rec trf, F32T8 32w, electronic ballast	24	RLT842dw - (2) 4' LED T8 lamp 10.5w, Type B, direct wire, 50,000-Hr L70 rated life, remove existing ballast from service	24

Fire Station No. 2 -

PRE-RETROFIT			POST RETROFIT	
Location	Existing Fixture Description	Qty	Retrofit Code Description (Ltg Control in RED)	Qty
Rf#-31 Rm - Ext - Ground Mount	LED 1L flood, flag light, LED, n/a	1	DND - DND: (do not do, fixtures left as is)	1
Rf#-32 Rm - Ext - Pole Mount	LED 1L SB, LED, n/a		DND - DND: (do not do, fixtures left as is)	0
Rf#-33 Rm - Ext - Wall Mount	CF 2L sm wall pack, CFP-13W 2 pin, CF ballast	9	NL028/wp/ft - New LED wall pack (FT), 50,000-Hr L70 rated life, 28w (MAX)	9
Rf#-34 Rm - Ext - Wall Mount	MH 1L wm wall pack large, MH 150W, HID ballast	10	NL028/wp/ft - New LED wall pack (FT), 50,000-Hr L70 rated life, 28w (MAX)	10
Rf#-35 Rm - Ext - Ceiling Mount	CF 2L rec can 8", CFP-26w, CF ballast	4	RL011/ckit/6t8 - (1) LED 6" rec can kit, 4000K, 11w, 120/277, 50,000-Hr L70 rated life, (1) 8" trim ring extender	4
Rf#-36 Rm - Ext - Ceiling Mount	1x4x 2L sm vapor tight, F32T8 32w, electronic ballast	1	RLT842dw - (2) 4' LED T8 lamp 10.5w, Type B, direct wire, 50,000-Hr L70 rated life, remove existing ballast from service	1
2nd Floor				
Rf#-37 Rm - Hall	CF 2L rec can 8", CFP-26w, CF ballast	22	RL011/ckit/6t8 - (1) LED 6" rec can kit, 4000K, 11w, 120/277, 50,000-Hr L70 rated life, (1) 8" trim ring extender	22
Rf#-38 Rm - Hall	CF 1L rec step light, CFP-13W, CF ballast	9	RL012/fkit - (1) LED 3"x6" module 12w, 120/277, 50,000-Hr L70 rated life, remove ballast from service	9
Rf#-39 Rm - Pole	CF 2L rec can 8", CFP-26w, CF ballast	3	RL011/ckit/6t8 - (1) LED 6" rec can kit, 4000K, 11w, 120/277, 50,000-Hr L70 rated life, (1) 8" trim ring extender	3
Rf#-40 Rm - RR	CF 2L rec can 8", CFP-26w, CF ballast	8	RL011/ckit/6t8 - (1) LED 6" rec can kit, 4000K, 11w, 120/277, 50,000-Hr L70 rated life, (1) 8" trim ring extender	8
Rf#-41 Rm - RR	2x4x 3L rec trf, F32T8 32w, electronic ballast	5	RLT843dw - (3) 4' LED T8 lamp 10.5w, Type B, direct wire, 50,000-Hr L70 rated life, remove existing ballast from service	5
Rf#-42 Rm - RR	1x4x 2L rec trf, F32T8 32w, electronic ballast	3	RLT842dw - (2) 4' LED T8 lamp 10.5w, Type B, direct wire, 50,000-Hr L70 rated life, remove existing ballast from service	3
Rf#-43 Rm - Sleep 1	2x4x 3L rec trf, F32T8 32w, electronic ballast	3	RLT843dw - (3) 4' LED T8 lamp 10.5w, Type B, direct wire, 50,000-Hr L70 rated life, remove existing ballast from service	3
Rf#-44 Rm - Sleep 1	Inc. 1L wm reading light, Inc. 60w A19, n/a	2	RL091/s - (1) LED 8.5w A19 screw in lamp, 4000K	2
Rf#-45 Rm - Sleep 2	2x4x 3L rec trf, F32T8 32w, electronic ballast	3	RLT843dw - (3) 4' LED T8 lamp 10.5w, Type B, direct wire, 50,000-Hr L70 rated life, remove existing ballast from service	3
Rf#-46 Rm - Sleep 2	Inc. 1L wm reading light, Inc. 60w A19, n/a	2	RL091/s - (1) LED 8.5w A19 screw in lamp, 4000K	2
Rf#-47 Rm - Sleep 3	2x4x 3L rec trf, F32T8 32w, electronic ballast	3	RLT843dw - (3) 4' LED T8 lamp 10.5w, Type B, direct wire, 50,000-Hr L70 rated life, remove existing ballast from service	3
Rf#-48 Rm - Sleep 3	Inc. 1L wm reading light, Inc. 60w A19, n/a	2	RL091/s - (1) LED 8.5w A19 screw in lamp, 4000K	2
Rf#-49 Rm - Weight	2x4x 3L rec trf, F32T8 32w, electronic ballast	6	RLT843dw - (3) 4' LED T8 lamp 10.5w, Type B, direct wire, 50,000-Hr L70 rated life, remove existing ballast from service	6
	Qty for Fire Station No. 2 :	**284**		**284**

Fire Station No. 3 -

PRE-RETROFIT			POST RETROFIT	
Location	Existing Fixture Description	Qty	Retrofit Code Description (Ltg Control in RED)	Qty
Building/Area: Main				
1st Floor				
Rf#-1 Rm - Lobby	CF 1L rec can 8", CFP-26w, CF ballast	2	RL011/ckit/6t8 - (1) LED 6" rec can kit, 4000K, 11w, 120/277, 50,000-Hr L70 rated life, (1) 8" trim ring extender	2
Rf#-2 Rm - Lobby	1x4x 2L rec trf, F32T8 32w, electronic ballast	2	RLT842dw - (2) 4' LED T8 lamp 10.5w, Type B, direct wire, 50,000-Hr L70 rated life, remove existing ballast from service	2
Rf#-3 Rm - Electrical	1x4x 2L rec trf, F32T8 32w, electronic ballast	2	RLT842dw - (2) 4' LED T8 lamp 10.5w, Type B, direct wire, 50,000-Hr L70 rated life, remove existing ballast from service	2
Rf#-4 Rm - Medical	CF 2L rec can 8", CFP-26w, CF ballast	5	RL011/ckit/6t8 - (1) LED 6" rec can kit, 4000K, 11w, 120/277, 50,000-Hr L70 rated life, (1) 8" trim ring extender	5
Rf#-5 Rm - Medical	1x4 1L Strip, F32T8 32w, electronic ballast	6	RLT841dw - (1) 4' LED T8 lamp 10.5w, Type B, direct wire, 50,000-Hr L70 rated life, remove existing ballast from service	6
Rf#-6 Rm - Hall	CF 1L rec can 8", CFP-26w, CF ballast	5	RL011/ckit/6t8 - (1) LED 6" rec can kit, 4000K, 11w, 120/277, 50,000-Hr L70 rated life, (1) 8" trim ring extender	5
Rf#-7 Rm - Hall	2x4x 2L rec trf, F32T8 32w, electronic ballast	7	RLT842dw - (2) 4' LED T8 lamp 10.5w, Type B, direct wire, 50,000-Hr L70 rated life, remove existing ballast from service	7
Rf#-8 Rm - Office	2x4x 2L rec Vol trf, LED ?w, n/a	2	RLT842dw - (2) 4' LED T8 lamp 10.5w, Type B, direct wire, 50,000-Hr L70 rated life, remove existing ballast from service	2
Rf#-9 Rm - Sleep 7	CF 1L rec can 8", CFP-26w, CF ballast	1	RL011/ckit/6t8 - (1) LED 6" rec can kit, 4000K, 11w, 120/277, 50,000-Hr L70 rated life, (1) 8" trim ring extender	1
Rf#-10 Rm - Sleep 7	1x2x 2L wm light (reading), F17T8 17w, electronic ballast	2	RLT822dw - (2) 2' LED T8 lamp 7w, Type B, direct wire, 50,000-Hr L70 rated life, remove existing ballast from service	2
Rf#-11 Rm - Sleep 6	CF 1L rec can 8", CFP-26w, CF ballast	1	RL011/ckit/6t8 - (1) LED 6" rec can kit, 4000K, 11w, 120/277, 50,000-Hr L70 rated life, (1) 8" trim ring extender	1
Rf#-12 Rm - Sleep 6	1x2x 2L wm light (reading), F17T8 17w, electronic ballast	2	RLT822dw - (2) 2' LED T8 lamp 7w, Type B, direct wire, 50,000-Hr L70 rated life, remove existing ballast from service	2
Rf#-13 Rm - Sleep 5	CF 1L rec can 8", CFP-26w, CF ballast	1	RL011/ckit/6t8 - (1) LED 6" rec can kit, 4000K, 11w, 120/277, 50,000-Hr L70 rated life, (1) 8" trim ring extender	1
Rf#-14 Rm - Sleep 5	1x2x 2L wm light (reading), F17T8 17w, electronic ballast	2	RLT822dw - (2) 2' LED T8 lamp 7w, Type B, direct wire, 50,000-Hr L70 rated life, remove existing ballast from service	2
Rf#-15 Rm - Sleep 4	CF 1L rec can 8", CFP-26w, CF ballast	1	RL011/ckit/6t8 - (1) LED 6" rec can kit, 4000K, 11w, 120/277, 50,000-Hr L70 rated life, (1) 8" trim ring extender	1
Rf#-16 Rm - Sleep 4	1x2x 2L wm light (reading), F17T8 17w, electronic ballast	2	RLT822dw - (2) 2' LED T8 lamp 7w, Type B, direct wire, 50,000-Hr L70 rated life, remove existing ballast from service	2
Rf#-17 Rm - Sleep 3	CF 1L rec can 8", CFP-26w, CF ballast	1	RL011/ckit/6t8 - (1) LED 6" rec can kit, 4000K, 11w, 120/277, 50,000-Hr L70 rated life, (1) 8" trim ring extender	1
Rf#-18 Rm - Sleep 3	1x2x 2L wm light (reading), F17T8 17w, electronic ballast	2	RLT822dw - (2) 2' LED T8 lamp 7w, Type B, direct wire, 50,000-Hr L70 rated life, remove existing ballast from service	2
Rf#-19 Rm - Sleep 2	CF 1L rec can 8", CFP-26w, CF ballast	1	RL011/ckit/6t8 - (1) LED 6" rec can kit, 4000K, 11w, 120/277, 50,000-Hr L70 rated life, (1) 8" trim ring extender	1
Rf#-20 Rm - Sleep 2	1x2x 2L wm light (reading), F17T8 17w, electronic ballast	2	RLT822dw - (2) 2' LED T8 lamp 7w, Type B, direct wire, 50,000-Hr L70 rated life, remove existing ballast from service	2
Rf#-21 Rm - Sleep 1	CF 1L rec can 8", CFP-26w, CF ballast	1	RL011/ckit/6t8 - (1) LED 6" rec can kit, 4000K, 11w, 120/277, 50,000-Hr L70 rated life, (1) 8" trim ring extender	1
Rf#-22 Rm - Sleep 1	1x2x 2L wm light (reading), F17T8 17w, electronic ballast	2	RLT822dw - (2) 2' LED T8 lamp 7w, Type B, direct wire, 50,000-Hr L70 rated life, remove existing ballast from service	2
Rf#-23 Rm - RR1	1x4x 2L rec trf, F32T8 32w, electronic ballast	1	RLT842dw - (2) 4' LED T8 lamp 10.5w, Type B, direct wire, 50,000-Hr L70 rated life, remove existing ballast from service	1
Rf#-24 Rm - RR1	CF 1L rec can 8", CFP-26w, CF ballast	1	RL011/ckit/6t8 - (1) LED 6" rec can kit, 4000K, 11w, 120/277, 50,000-Hr L70 rated life, (1) 8" trim ring extender	1
Rf#-25 Rm - RR2	1x4x 2L rec trf, F32T8 32w, electronic ballast	1	RLT842dw - (2) 4' LED T8 lamp 10.5w, Type B, direct wire, 50,000-Hr L70 rated life, remove existing ballast from service	1
Rf#-26 Rm - RR2	CF 1L rec can 8", CFP-26w, CF ballast	1	RL011/ckit/6t8 - (1) LED 6" rec can kit, 4000K, 11w, 120/277, 50,000-Hr L70 rated life, (1) 8" trim ring extender	1
Rf#-27 Rm - RR3	1x4x 2L rec trf, F32T8 32w, electronic ballast	1	RLT842dw - (2) 4' LED T8 lamp 10.5w, Type B, direct wire, 50,000-Hr L70 rated life, remove existing ballast from service	1
Rf#-28 Rm - RR3	CF 1L rec can 8", CFP-26w, CF ballast	1	RL011/ckit/6t8 - (1) LED 6" rec can kit, 4000K, 11w, 120/277, 50,000-Hr L70 rated life, (1) 8" trim ring extender	1
Rf#-29 Rm - RR4	1x4x 2L rec trf, F32T8 32w, electronic ballast	1	RLT842dw - (2) 4' LED T8 lamp 10.5w, Type B, direct wire, 50,000-Hr L70 rated life, remove existing ballast from service	1
Rf#-30 Rm - RR4	CF 1L rec can 8", CFP-26w, CF ballast	1	RL011/ckit/6t8 - (1) LED 6" rec can kit, 4000K, 11w, 120/277, 50,000-Hr L70 rated life, (1) 8" trim ring extender	1

Fire Station No. 3 -

PRE-RETROFIT			POST RETROFIT	
Location	Existing Fixture Description	Qty	Retrofit Code Description (Ltg Control in RED)	Qty
Rf#-31 Rm - Kitchen	2x4x 2L rec trf, F32T8 32w, electronic ballast	6	RLT842dw - (2) 4' LED T8 lamp 10.5w, Type B, direct wire, 50,000-Hr L70 rated life, remove existing ballast from service	6
Rf#-32 Rm - Kitchen	Inc. 1L track light, MR 16 50W, n/a	7	RL061/s/mr16 - (1) LED 6w MR16 lamp, 4000K	7
Rf#-33 Rm - Custodian	1x4x 2L rec trf, F32T8 32w, electronic ballast	1	RLT842dw - (2) 4' LED T8 lamp 10.5w, Type B, direct wire, 50,000-Hr L70 rated life, remove existing ballast from service	1
Rf#-34 Rm - TV	2x4x 2L rec trf, F32T8 32w, electronic ballast	6	RL025/tkit24 - (1) LED 25w 2x4 rec trf kit w/volumetric lens 70,000-Hr L70 rated life (ALE) L-DS	6
Rf#-35 Rm - Bay	1x4x 2L rec trf, F32T8 32w, electronic ballast	24	RLT842dw - (2) 4' LED T8 lamp 10.5w, Type B, direct wire, 50,000-Hr L70 rated life, remove existing ballast from service	24
Rf#-36 Rm - Bay	CF 1L rec can 8", CFP-26w, CF ballast	1	RL011/ckit/6t8 - (1) LED 6" rec can kit, 4000K, 11w, 120/277, 50,000-Hr L70 rated life, (1) 8" trim ring extender	1
Rf#-37 Rm - Supply 1	1x4x 2L rec trf, F32T8 32w, electronic ballast	4	RLT842dw - (2) 4' LED T8 lamp 10.5w, Type B, direct wire, 50,000-Hr L70 rated life, remove existing ballast from service	4
Rf#-38 Rm - RR	1x4x 2L rec trf, F32T8 32w, electronic ballast	1	RLT842dw - (2) 4' LED T8 lamp 10.5w, Type B, direct wire, 50,000-Hr L70 rated life, remove existing ballast from service	1
Rf#-39 Rm - Supply 2	1x4x 2L rec trf, F32T8 32w, electronic ballast	3	RLT842dw - (2) 4' LED T8 lamp 10.5w, Type B, direct wire, 50,000-Hr L70 rated life, remove existing ballast from service	3
Rf#-40 Rm - Clothing	1x4x 2L sm strip, F32T8 32w, electronic ballast	8	RLT842dw - (2) 4' LED T8 lamp 10.5w, Type B, direct wire, 50,000-Hr L70 rated life, remove existing ballast from service	8
Rf#-41 Rm - Weights	2x4x 2L rec trf, F32T8 32w, electronic ballast	4	RLT842dw - (2) 4' LED T8 lamp 10.5w, Type B, direct wire, 50,000-Hr L70 rated life, remove existing ballast from service	4
Rf#-42 Rm - Work	1x4x 2L sm strip, F32T8 32w, electronic ballast	3	RLT842dw - (2) 4' LED T8 lamp 10.5w, Type B, direct wire, 50,000-Hr L70 rated life, remove existing ballast from service	3
Rf#-43 Rm - Work	1x2x 1L sm wp, F17T8 17w, electronic ballast	7	RLT821dw - (1) 2' LED T8 lamp 7w, Type B, direct wire, 50,000-Hr L70 rated life, remove existing ballast from service	7
Rf#-44 Rm - Laundry	1x4x 2L sm strip, F32T8 32w, electronic ballast	2	RLT842dw - (2) 4' LED T8 lamp 10.5w, Type B, direct wire, 50,000-Hr L70 rated life, remove existing ballast from service	2
Rf#-45 Rm - Water	1x4x 2L sm strip, F32T8 32w, electronic ballast	1	RLT842dw - (2) 4' LED T8 lamp 10.5w, Type B, direct wire, 50,000-Hr L70 rated life, remove existing ballast from service	1
Rf#-46 Rm - Data	1x4x 2L sm strip, F32T8 32w, electronic ballast	1	RLT842dw - (2) 4' LED T8 lamp 10.5w, Type B, direct wire, 50,000-Hr L70 rated life, remove existing ballast from service	1
Rf#-47 Rm - Ext - Ceiling Mount	CF 1L rec can 8", CFP-26w, CF ballast	2	RL011/ckit/6t8 - (1) LED 6" rec can kit, 4000K, 11w, 120/277, 50,000-Hr L70 rated life, (1) 8" trim ring extender	2
Rf#-48 Rm - Ext - Roof Edge	HPS 1L flood, trunion, HPS 200W E39, HID ballast	3	NL070/p/s - New LED area light, pole or bldg. mount, 50,000-Hr L70 rated life, 70w (Vly) oemB	3
Rf#-49 Rm - Shelter	1x4 1L Vapor Tite, F32T8 32w, electronic ballast	10	RLT841dw - (1) 4' LED T8 lamp 10.5w, Type B, direct wire, 50,000-Hr L70 rated life, remove existing ballast from service	10
Rf#-50 Rm - Ext Shed	1x4x 2L sm strip, F32T8 32w, electronic ballast	2	RLT842dw - (2) 4' LED T8 lamp 10.5w, Type B, direct wire, 50,000-Hr L70 rated life, remove existing ballast from service	2
Rf#-51 Rm - Ext - Pole Mount	LPS 1L SB pole mnt, LPS 90w, HID ballast	15	NL040/p/s - New LED area light, pole or bldg. mount, 50,000-Hr L70 rated life, 40w (Vly) oemB	15
Rf#-52 Rm - Ext - Pole Mount	LED 1L SB pole mount, LED CC, n/a	1	NL040/p/s - New LED area light, pole or bldg. mount, 50,000-Hr L70 rated life, 40w (Vly) oemB	1
Rf#-53 Rm - Parking	LPS 1L SB SqP grey, LPS 90w, HID ballast	5	NL070/p/s - New LED area light, pole or bldg. mount, 50,000-Hr L70 rated life, 70w (Vly) oemB	5
Rf#-54 Rm - Parking	LED 1L area light SqP grey, LED CC, n/a	1	NL070/p/s - New LED area light, pole or bldg. mount, 50,000-Hr L70 rated life, 70w (Vly) oemB	1
	Qty for Fire Station No. 3 :	**178**		**178**

Fire Station No. 4 -

PRE-RETROFIT			POST RETROFIT	
Location	Existing Fixture Description	Qty	Retrofit Code Description (Ltg Control in RED)	Qty
Building/Area: Main				
1st Floor				
Rf#-1 Rm - Lobby / Hall	2x2x 3L rec trf, F17T8 17w, electronic ballast	13	RLT823dw - (3) 2' LED T8 lamp 7w, Type B, direct wire, 50,000-Hr L70 rated life, remove existing ballast from service	13
Rf#-2 Rm - Lobby / Hall	CF 1L wm rec step light, CFP-7w PLS, CF ballast	9	RL061/h - (1) LED 2 pin lamp, direct wire, Gx23 base, 120/277v, 6w, 50,000-Hr L70 rated life	9
Rf#-3 Rm - Office	2x2x 2L rec vol trf, F17T8 17w, electronic ballast	4	RLT822dw - (2) 2' LED T8 lamp 7w, Type B, direct wire, 50,000-Hr L70 rated life, remove existing ballast from service	4
Rf#-4 Rm - Custodian	1x4x 2L sm wp, F32T8 32w, electronic ballast	1	RLT842dw - (2) 4' LED T8 lamp 10.5w, Type B, direct wire, 50,000-Hr L70 rated life, remove existing ballast from service	1
Rf#-5 Rm - RR	1x4x 2L rec trf, F32T8 32w, electronic ballast	1	RLT842dw - (2) 4' LED T8 lamp 10.5w, Type B, direct wire, 50,000-Hr L70 rated life, remove existing ballast from service	1
Rf#-6 Rm - RR	CF 2L rec can 8", CFP-26w, CF ballast	2	RL011/ckit/6t8 - (1) LED 6" rec can kit, 4000K, 11w, 120/277, 50,000-Hr L70 rated life, (1) 8" trim ring extender	2
Rf#-7 Rm - Kitchen	2x2x 3L rec trf, F17T8 17w, electronic ballast	6	RLT823dw - (3) 2' LED T8 lamp 7w, Type B, direct wire, 50,000-Hr L70 rated life, remove existing ballast from service	6
Rf#-8 Rm - Kitchen	CF 1L rec can 6", CFP-26w, CF ballast	4	RL011/ckit/6 - (1) LED 6" rec can kit, 4000K, 11w, 120/277, 50,000-Hr L70 rated life	4
Rf#-9 Rm - TV	2x2x 3L rec trf, F17T8 17w, electronic ballast	4	RL025/tkit22 - (1) LED 25w 2x2 rec trf kit w/volumetric lens 70,000-Hr L70 rated life (ALE) L-DS	4
Rf#-10 Rm - TV	CF 1L rec can 6", CFP-26w, CF ballast	4	RL011/ckit/6 - (1) LED 6" rec can kit, 4000K, 11w, 120/277, 50,000-Hr L70 rated life L-DS	4
Rf#-11 Rm - Data	1x4x 2L rec trf, F32T8 32w, electronic ballast	2	RLT842dw - (2) 4' LED T8 lamp 10.5w, Type B, direct wire, 50,000-Hr L70 rated life, remove existing ballast from service	2
Rf#-12 Rm - RR1	1x4x 2L rec trf, F32T8 32w, electronic ballast	1	RLT842dw - (2) 4' LED T8 lamp 10.5w, Type B, direct wire, 50,000-Hr L70 rated life, remove existing ballast from service	1
Rf#-13 Rm - RR2	1x4x 2L rec trf, F32T8 32w, electronic ballast	1	RLT842dw - (2) 4' LED T8 lamp 10.5w, Type B, direct wire, 50,000-Hr L70 rated life, remove existing ballast from service	1
Rf#-14 Rm - Closet	2x2x 3L rec trf, F17T8 17w, electronic ballast	1	RLT823dw - (3) 2' LED T8 lamp 7w, Type B, direct wire, 50,000-Hr L70 rated life, remove existing ballast from service	1
Rf#-15 Rm - Sleep 5	2x2x 3L rec trf, F17T8 17w, electronic ballast	2	RLT823dw - (3) 2' LED T8 lamp 7w, Type B, direct wire, 50,000-Hr L70 rated life, remove existing ballast from service	2
Rf#-16 Rm - Sleep 4	2x2x 3L rec trf, F17T8 17w, electronic ballast	2	RLT823dw - (3) 2' LED T8 lamp 7w, Type B, direct wire, 50,000-Hr L70 rated life, remove existing ballast from service	2
Rf#-17 Rm - Sleep 3	2x2x 3L rec trf, F17T8 17w, electronic ballast	2	RLT823dw - (3) 2' LED T8 lamp 7w, Type B, direct wire, 50,000-Hr L70 rated life, remove existing ballast from service	2
Rf#-18 Rm - Sleep 2	2x2x 3L rec trf, F17T8 17w, electronic ballast	2	RLT823dw - (3) 2' LED T8 lamp 7w, Type B, direct wire, 50,000-Hr L70 rated life, remove existing ballast from service	2
Rf#-19 Rm - Sleep 1	2x2x 3L rec trf, F17T8 17w, electronic ballast	2	RLT823dw - (3) 2' LED T8 lamp 7w, Type B, direct wire, 50,000-Hr L70 rated life, remove existing ballast from service	2
Rf#-20 Rm - Bay	1x4x 2L sm wp, F32T8 32w, electronic ballast	27	RLT842dw - (2) 4' LED T8 lamp 10.5w, Type B, direct wire, 50,000-Hr L70 rated life, remove existing ballast from service	27
Rf#-21 Rm - Bay - Map Lite	1x4x 3L wm wall wash, F32T8 32w, electronic ballast	1	RLT843dw - (3) 4' LED T8 lamp 10.5w, Type B, direct wire, 50,000-Hr L70 rated life, remove existing ballast from service	1
Rf#-22 Rm - Laundry	1x4x 4L sm wp, F32T8 32w, electronic ballast	1	RLT844dw - (4) 4' LED T8 lamp 10.5w, Type B, direct wire, 50,000-Hr L70 rated life, remove existing ballast from service	1
Rf#-23 Rm - Laundry	1x4x 2L rec trf, F32T8 32w, electronic ballast	3	RLT842dw - (2) 4' LED T8 lamp 10.5w, Type B, direct wire, 50,000-Hr L70 rated life, remove existing ballast from service	3
Rf#-24 Rm - Clothing	1x4x 2L rec trf, F32T8 32w, electronic ballast	2	RLT842dw - (2) 4' LED T8 lamp 10.5w, Type B, direct wire, 50,000-Hr L70 rated life, remove existing ballast from service	2
Rf#-25 Rm - Weights	1x4x 2L rec trf, F32T8 32w, electronic ballast	6	RLT842dw - (2) 4' LED T8 lamp 10.5w, Type B, direct wire, 50,000-Hr L70 rated life, remove existing ballast from service	6
Rf#-26 Rm - Custodian	1x4x 2L sm wp, F32T8 32w, electronic ballast	1	RLT842dw - (2) 4' LED T8 lamp 10.5w, Type B, direct wire, 50,000-Hr L70 rated life, remove existing ballast from service	1
Rf#-27 Rm - Ext - Electrical	1x4x 2L sm wp, F32T8 32w, electronic ballast	1	RLT842dw - (2) 4' LED T8 lamp 10.5w, Type B, direct wire, 50,000-Hr L70 rated life, remove existing ballast from service	1
Rf#-28 Rm - Ext - Wall Mount	CF 1L wm wall pack small, CFP-32w, CF ballast	9	RL0111/h - (1) LED 4 pin lamp, direct wire, 120/277v, 11w, 50,000-Hr L70 rated life, horizontal	9
Rf#-29 Rm - Ext - Wall Mount	CF 1L flood, knuckle 1/2", CFP-42w, CF ballast	3	NL035/fld - New LED flood, knuckle mount, 50,000-Hr L70 rated life, 35w (Key)	3
Rf#-30 Rm - Ext - Wall Mount	LPS 2L SB SqP BZ, LPS 90w, HID ballast	3	NL070/p/s - New LED area light, pole or bldg. mount, 50,000-Hr L70 rated life, 70w (Vly) oemB	3

W* = wall switch sensor; C* = ceiling sensor; E* = existing sensor, L* Dimming Control

Fire Station No. 4 -

PRE-RETROFIT			POST RETROFIT	
Location	Existing Fixture Description	Qty	Retrofit Code Description (Ltg Control in RED)	Qty
Rf#-31 Rm - Ext - Pole Mount	LPS 2L SB SqP BZ, LPS 90w, HID ballast	6	NL070/p/s - New LED area light, pole or bldg. mount, 50,000-Hr L70 rated life, 70w (Vly) oemB	6
Rf#-32 Rm - Shed	1x4x 2L sm wp, F32T8 32w, electronic ballast	1	RLT842dw - (2) 4' LED T8 lamp 10.5w, Type B, direct wire, 50,000-Hr L70 rated life, remove existing ballast from service	1
	Qty for Fire Station No. 4 :	**127**		**127**

Fire Station No. 5 -

PRE-RETROFIT			POST RETROFIT	
Location	Existing Fixture Description	Qty	Retrofit Code Description (Ltg Control in RED)	Qty
Building/Area: Main				
1st Floor				
Rf#-1 Rm - Lobby	CF 1L rec can 8", CFP-32w, CF ballast	2	RL011/ckit/6t8 - (1) LED 6" rec can kit, 4000K, 11w, 120/277, 50,000-Hr L70 rated life, (1) 8" trim ring extender	2
Rf#-2 Rm - RR	1x4x 2L rec trf, F32T8 32w, electronic ballast	1	RLT842dw - (2) 4' LED T8 lamp 10.5w, Type B, direct wire, 50,000-Hr L70 rated life, remove existing ballast from service	1
Rf#-3 Rm - Hall	CF 1L rec can 8", CFP-32w, CF ballast	11	RL011/ckit/6t8 - (1) LED 6" rec can kit, 4000K, 11w, 120/277, 50,000-Hr L70 rated life, (1) 8" trim ring extender	11
Rf#-4 Rm - Hall	1x4x 1L sm strip (cove), F32T8 32w, electronic ballast	8	RLT841dw - (1) 4' LED T8 lamp 10.5w, Type B, direct wire, 50,000-Hr L70 rated life, remove existing ballast from service	8
Rf#-5 Rm - Office 1	2x2x 2L rec trf, FB31T8 32w U6, electronic ballast	4	RLT822Udw - (2) 2' LED T8 "U" lamp 15w, Type B, direct wire, 50,000-Hr L70 rated life, remove existing ballast from service (SYL)	4
Rf#-6 Rm - Office 2	2x2x 2L rec trf, FB31T8 32w U6, electronic ballast	4	RLT822Udw - (2) 2' LED T8 "U" lamp 15w, Type B, direct wire, 50,000-Hr L70 rated life, remove existing ballast from service (SYL)	4
Rf#-7 Rm - RR / Locker	CF 1L rec can 8", CFP-32w, CF ballast	12	RL011/ckit/6t8 - (1) LED 6" rec can kit, 4000K, 11w, 120/277, 50,000-Hr L70 rated life, (1) 8" trim ring extender	12
Rf#-8 Rm - RR / Locker	1x4x 2L rec trf, F32T8 32w, electronic ballast	11	RLT842dw - (2) 4' LED T8 lamp 10.5w, Type B, direct wire, 50,000-Hr L70 rated life, remove existing ballast from service	11
Rf#-9 Rm - Closet	1x4x 2L rec trf, F32T8 32w, electronic ballast	1	RLT842dw - (2) 4' LED T8 lamp 10.5w, Type B, direct wire, 50,000-Hr L70 rated life, remove existing ballast from service	1
Rf#-10 Rm - Data	1x3x 2L sm strip, F25T8 25w, electronic ballast	1	RLT832dw - (2) 3' LED T8 lamp 12w, Type B, direct wire, 50,000-Hr L70 rated life, remove existing ballast from service	1
Rf#-11 Rm - Mail	2x2x 2L rec trf, FB31T8 32w U6, electronic ballast	4	RLT822Udw - (2) 2' LED T8 "U" lamp 15w, Type B, direct wire, 50,000-Hr L70 rated life, remove existing ballast from service (SYL)	4
Rf#-12 Rm - TV	CF 1L rec can 8", CFP-32w, CF ballast	2	RL011/ckit/6t8 - (1) LED 6" rec can kit, 4000K, 11w, 120/277, 50,000-Hr L70 rated life, (1) 8" trim ring extender	2
Rf#-13 Rm - TV	2x2x 2L rec trf, FB31T8 32w U6, electronic ballast	6	RL025/tkit22 - (1) LED 25w 2x2 rec trf kit w/volumetric lens 70,000-Hr L70 rated life (ALE) L-DS	6
Rf#-14 Rm - Closet	1x3x 2L sm strip, F25T8 25w, electronic ballast	1	RLT832dw - (2) 3' LED T8 lamp 12w, Type B, direct wire, 50,000-Hr L70 rated life, remove existing ballast from service	1
Rf#-15 Rm - Water	1x3x 2L sm strip, F25T8 25w, electronic ballast	1	RLT832dw - (2) 3' LED T8 lamp 12w, Type B, direct wire, 50,000-Hr L70 rated life, remove existing ballast from service	1
Rf#-16 Rm - Kitchen	CF 1L rec can 6", CFP-26w, CF ballast	8	RL011/ckit/6 - (1) LED 6" rec can kit, 4000K, 11w, 120/277, 50,000-Hr L70 rated life	8
Rf#-17 Rm - Sleep 1	2x2x 2L rec trf, FB31T8 32w U6, electronic ballast	1	RLT822Udw - (2) 2' LED T8 "U" lamp 15w, Type B, direct wire, 50,000-Hr L70 rated life, remove existing ballast from service (SYL)	1
Rf#-18 Rm - Sleep 1	1x2x 1L wm light (reading), F17T8 17w, electronic ballast	1	RLT821dw - (1) 2' LED T8 lamp 7w, Type B, direct wire, 50,000-Hr L70 rated life, remove existing ballast from service	1
Rf#-19 Rm - Sleep 2	2x2x 2L rec trf, FB31T8 32w U6, electronic ballast	1	RLT822Udw - (2) 2' LED T8 "U" lamp 15w, Type B, direct wire, 50,000-Hr L70 rated life, remove existing ballast from service (SYL)	1
Rf#-20 Rm - Sleep 2	1x2x 1L wm light (reading), F17T8 17w, electronic ballast	1	RLT821dw - (1) 2' LED T8 lamp 7w, Type B, direct wire, 50,000-Hr L70 rated life, remove existing ballast from service	1
Rf#-21 Rm - Sleep 3	2x2x 2L rec trf, FB31T8 32w U6, electronic ballast	1	RLT822Udw - (2) 2' LED T8 "U" lamp 15w, Type B, direct wire, 50,000-Hr L70 rated life, remove existing ballast from service (SYL)	1
Rf#-22 Rm - Sleep 3	1x2x 1L wm light (reading), F17T8 17w, electronic ballast	1	RLT821dw - (1) 2' LED T8 lamp 7w, Type B, direct wire, 50,000-Hr L70 rated life, remove existing ballast from service	1
Rf#-23 Rm - Sleep 4	2x2x 2L rec trf, FB31T8 32w U6, electronic ballast	1	RLT822Udw - (2) 2' LED T8 "U" lamp 15w, Type B, direct wire, 50,000-Hr L70 rated life, remove existing ballast from service (SYL)	1
Rf#-24 Rm - Sleep 4	1x2x 1L wm light (reading), F17T8 17w, electronic ballast	1	RLT821dw - (1) 2' LED T8 lamp 7w, Type B, direct wire, 50,000-Hr L70 rated life, remove existing ballast from service	1
Rf#-25 Rm - Sleep 4	1x3x 2L sm strip, F25T8 25w, electronic ballast	1	RLT832dw - (2) 3' LED T8 lamp 12w, Type B, direct wire, 50,000-Hr L70 rated life, remove existing ballast from service	1
Rf#-26 Rm - Sleep 5	2x2x 2L rec trf, FB31T8 32w U6, electronic ballast	1	RLT822Udw - (2) 2' LED T8 "U" lamp 15w, Type B, direct wire, 50,000-Hr L70 rated life, remove existing ballast from service (SYL)	1
Rf#-27 Rm - Sleep 5	1x2x 1L wm light (reading), F17T8 17w, electronic ballast	1	RLT821dw - (1) 2' LED T8 lamp 7w, Type B, direct wire, 50,000-Hr L70 rated life, remove existing ballast from service	1
Rf#-28 Rm - Sleep 6	2x2x 2L rec trf, FB31T8 32w U6, electronic ballast	1	RLT822Udw - (2) 2' LED T8 "U" lamp 15w, Type B, direct wire, 50,000-Hr L70 rated life, remove existing ballast from service (SYL)	1
Rf#-29 Rm - Sleep 6	1x2x 1L wm light (reading), F17T8 17w, electronic ballast	1	RLT821dw - (1) 2' LED T8 lamp 7w, Type B, direct wire, 50,000-Hr L70 rated life, remove existing ballast from service	1
Rf#-30 Rm - Bay	1x4x 2L rec vol trf, F32T8 32w, electronic ballast	22	RLT842dw - (2) 4' LED T8 lamp 10.5w, Type B, direct wire, 50,000-Hr L70 rated life, remove existing ballast from service	22

Fire Station No. 5 -

PRE-RETROFIT			POST RETROFIT	
Location	Existing Fixture Description	Qty	Retrofit Code Description (Ltg Control in RED)	Qty
Rf#-31 Rm - Bay	1x4x 2L rec vol trf, F32T8 32W RED, electronic ballast	6	RLT842dw(Tgred) - (2) 4' LED T8 lamp 10.5w, Type B, direct wire, 50,000-Hr L70 rated life, remove existing ballast from service, (1) red colored tube	6
Rf#-32 Rm - Bay	CF 1L rec can 8", CFP-32w, CF ballast	2	RL011/ckit/6t8 - (1) LED 6" rec can kit, 4000K, 11w, 120/277, 50,000-Hr L70 rated life, (1) 8" trim ring extender	2
Rf#-33 Rm - Clothing	2x4x 3L rec trf, F32T8 32w, electronic ballast	4	RLT843dw - (3) 4' LED T8 lamp 10.5w, Type B, direct wire, 50,000-Hr L70 rated life, remove existing ballast from service	4
Rf#-34 Rm - Work	2x4x 3L rec trf, F32T8 32w, electronic ballast	5	RLT843dw - (3) 4' LED T8 lamp 10.5w, Type B, direct wire, 50,000-Hr L70 rated life, remove existing ballast from service	5
Rf#-35 Rm - Weights	2x4x 3L rec trf, F32T8 32w, electronic ballast	4	RLT843dw - (3) 4' LED T8 lamp 10.5w, Type B, direct wire, 50,000-Hr L70 rated life, remove existing ballast from service	4
Rf#-36 Rm - Ext - Hose	1x4x 2L sm wp, F32T8 32w, electronic ballast	1	RLT842dw - (2) 4' LED T8 lamp 10.5w, Type B, direct wire, 50,000-Hr L70 rated life, remove existing ballast from service	1
Rf#-37 Rm - Ext - Electrical	1x4x 2L sm wp, F32T8 32w, electronic ballast	1	RLT842dw - (2) 4' LED T8 lamp 10.5w, Type B, direct wire, 50,000-Hr L70 rated life, remove existing ballast from service	1
Rf#-38 Rm - Ext - Ceiling Mount	CF 1L rec can 8", CFP-32w, CF ballast	2	RL011/ckit/6t8 - (1) LED 6" rec can kit, 4000K, 11w, 120/277, 50,000-Hr L70 rated life, (1) 8" trim ring extender	2
Rf#-39 Rm - Ext - Wall Mount	LED 1L sm square, LED, n/a	2	DND - DND: (do not do, fixtures left as is)	2
Rf#-40 Rm - Ext - Wall Mount	CF 1L wm wall dome, CFP-32w, CF ballast	5	NL028/wp/ft - New LED wall pack (FT), 50,000-Hr L70 rated life, 28w (MAX)	5
Rf#-41 Rm - Ext - Wall Mount	1x4x 1L wm sconce (vertical), F32T8 32w, electronic ballast	2	RLT841dw - (1) 4' LED T8 lamp 10.5w, Type B, direct wire, 50,000-Hr L70 rated life, remove existing ballast from service	2
Rf#-42 Rm - Ext - Pole Mount	LPS 1L SB Sqp grey, LPS 90w, HID ballast	4	NL040/p/s - New LED area light, pole or bldg. mount, 50,000-Hr L70 rated life, 40w (Vly) oemB	4
Rf#-43 Rm - Ext - Ground Mount	LED 1L bollard, LED, n/a	2	DND - DND: (do not do, fixtures left as is)	2
Rf#-44 Rm - Fuel Area	1x4x 2L sm wp, F32T8 32w, electronic ballast	3	RLT842dw - (2) 4' LED T8 lamp 10.5w, Type B, direct wire, 50,000-Hr L70 rated life, remove existing ballast from service	3
	Qty for Fire Station No. 5 :	**155**		**155**

Fire Station No. 6 -

PRE-RETROFIT			POST RETROFIT	
Location	Existing Fixture Description	Qty	Retrofit Code Description (Ltg Control in RED)	Qty
Building/Area: Main Bldg				
1st Floor				
Rf#-1 Rm - entry lobby	LED 1L rec can, LED Pin lamp 13w, n/a	4	RL011/ckit/6 - (1) LED 6" rec can kit, 4000K, 11w, 120/277, 50,000-Hr L70 rated life	4
Rf#-2 Rm - lobby RR	CF 1L rec can 8", CFP-32w, CF ballast	1	RL011/ckit/6t8 - (1) LED 6" rec can kit, 4000K, 11w, 120/277, 50,000-Hr L70 rated life, (1) 8" trim ring extender	1
Rf#-3 Rm - lobby RR	1x4x 2L rec trf, F32T8 32w, electronic ballast	1	RLT842dw - (2) 4' LED T8 lamp 10.5w, Type B, direct wire, 50,000-Hr L70 rated life, remove existing ballast from service	1
Rf#-4 Rm - hallway/desk area	CF 1L rec can 8", CFP-32w, CF ballast	3	RL011/ckit/6t8 - (1) LED 6" rec can kit, 4000K, 11w, 120/277, 50,000-Hr L70 rated life, (1) 8" trim ring extender	3
Rf#-5 Rm - hallway/desk area	2x4x 2L rec trf, F32T8 32w, electronic ballast	7	RL025/tkit24 - (1) LED 25w 2x4 rec trf kit w/volumetric lens 70,000-Hr L70 rated life (ALE) L-DS	7
Rf#-6 Rm - Office #1	2x4x 3L rec trf, F32T8 32w, electronic ballast	2	RL025/tkit24 - (1) LED 25w 2x4 rec trf kit w/volumetric lens 70,000-Hr L70 rated life (ALE) L-DS	2
Rf#-7 Rm - Server Room	1x4x 2L rec trf, F32T8 32w, electronic ballast	1	RLT842dw - (2) 4' LED T8 lamp 10.5w, Type B, direct wire, 50,000-Hr L70 rated life, remove existing ballast from service	1
Rf#-8 Rm - water heater room	1x4x 2L rec trf, F32T8 32w, electronic ballast	1	RLT842dw - (2) 4' LED T8 lamp 10.5w, Type B, direct wire, 50,000-Hr L70 rated life, remove existing ballast from service	1
Rf#-9 Rm - Garage Bays	1x4x 2L rec trf, F32T8 32w, electronic ballast	24	RLT842dw - (2) 4' LED T8 lamp 10.5w, Type B, direct wire, 50,000-Hr L70 rated life, remove existing ballast from service	24
Rf#-10 Rm - laundry room	1x4x 2L rec trf, F32T8 32w, electronic ballast	2	RLT842dw - (2) 4' LED T8 lamp 10.5w, Type B, direct wire, 50,000-Hr L70 rated life, remove existing ballast from service	2
Rf#-11 Rm - tool room	1x4x 2L rec trf, F32T8 32w, electronic ballast	2	RLT842dw - (2) 4' LED T8 lamp 10.5w, Type B, direct wire, 50,000-Hr L70 rated life, remove existing ballast from service	2
Rf#-12 Rm - ? Room	1x4x 2L rec trf, F32T8 32w, electronic ballast	2	RLT842dw - (2) 4' LED T8 lamp 10.5w, Type B, direct wire, 50,000-Hr L70 rated life, remove existing ballast from service	2
Rf#-13 Rm - ? Room inside above	1x4x 2L rec trf, F32T8 32w, electronic ballast	2	RLT842dw - (2) 4' LED T8 lamp 10.5w, Type B, direct wire, 50,000-Hr L70 rated life, remove existing ballast from service	2
Rf#-14 Rm - Locker Room	1x4x 2L rec trf, F32T8 32w, electronic ballast	4	RLT842dw - (2) 4' LED T8 lamp 10.5w, Type B, direct wire, 50,000-Hr L70 rated life, remove existing ballast from service	4
Rf#-15 Rm - Locker Room RR	1x4x 2L rec trf, F32T8 32w, electronic ballast	1	RLT842dw - (2) 4' LED T8 lamp 10.5w, Type B, direct wire, 50,000-Hr L70 rated life, remove existing ballast from service	1
Rf#-16 Rm - wieght room	2x4x 3L rec trf, F32T8 32w, electronic ballast	6	RL025/tkit24 - (1) LED 25w 2x4 rec trf kit w/volumetric lens 70,000-Hr L70 rated life (ALE) L-DS	6
Rf#-17 Rm - dorm hallway	2x4x 2L rec trf, F32T8 32w, electronic ballast	2	RL025/tkit24bt - (1) LED 25w 2x4 rec trf kit w/volumetric lens 70,000-Hr L70 rated life (ALE) L-DS	2
Rf#-18 Rm - dorm hallway	CF 1L wm step light, CFP-18w, CF ballast	7	RL012/fkit - (1) LED 3"x6" module 12w, 120/277, 50,000-Hr L70 rated life, remove ballast from service	7
Rf#-19 Rm - TV Room	2x4x 2L rec trf, F32T8 32w, electronic ballast dimming	4	RL025/tkit24bt - (1) LED 25w 2x4 rec trf kit w/volumetric lens 70,000-Hr L70 rated life (ALE) L-DS	4
Rf#-20 Rm - kitchen	CF 1L rec can?", CFP-32w, CF ballast	6	RL011/ckit/6 - (1) LED 6" rec can kit, 4000K, 11w, 120/277, 50,000-Hr L70 rated life	6
Rf#-21 Rm - kitchen	CF 1L rec can?", CFP-32w, CF ballast	5	RL011/ckit/6 - (1) LED 6" rec can kit, 4000K, 11w, 120/277, 50,000-Hr L70 rated life	5
Rf#-22 Rm - kitchen	Inc. 1L rec can?", Inc. 1L MR16 35w, n/a	3	RL061/s/mr16 - (1) LED 6w MR16 lamp, 4000K	3
Rf#-23 Rm - water heater room	1x4x 2L rec trf, F32T8 32w, electronic ballast	1	RLT842dw - (2) 4' LED T8 lamp 10.5w, Type B, direct wire, 50,000-Hr L70 rated life, remove existing ballast from service	1
Rf#-24 Rm - Dorm Room #1	CF 1L rec can?", CFP-32w, CF ballast	1	RL011/ckit/6 - (1) LED 6" rec can kit, 4000K, 11w, 120/277, 50,000-Hr L70 rated life	1
Rf#-25 Rm - Dorm Room #1	1x2x 1L wm light, F17T8 17w, electronic ballast	2	RLT821dw - (1) 2' LED T8 lamp 7w, Type B, direct wire, 50,000-Hr L70 rated life, remove existing ballast from service	2
Rf#-26 Rm - Dorm Room #2	CF 1L rec can?", CFP-32w, CF ballast	1	RL011/ckit/6 - (1) LED 6" rec can kit, 4000K, 11w, 120/277, 50,000-Hr L70 rated life	1
Rf#-27 Rm - Dorm Room #2	1x2x 1L wm light, F17T8 17w, electronic ballast	2	RLT821dw - (1) 2' LED T8 lamp 7w, Type B, direct wire, 50,000-Hr L70 rated life, remove existing ballast from service	2
Rf#-28 Rm - Dorm Room #3	CF 1L rec can?", CFP-32w, CF ballast	1	RL011/ckit/6 - (1) LED 6" rec can kit, 4000K, 11w, 120/277, 50,000-Hr L70 rated life	1
Rf#-29 Rm - Dorm Room #3	1x2x 1L wm light, F17T8 17w, electronic ballast	2	RLT821dw - (1) 2' LED T8 lamp 7w, Type B, direct wire, 50,000-Hr L70 rated life, remove existing ballast from service	2
Rf#-30 Rm - Dorm Room #4	CF 1L rec can?", CFP-32w, CF ballast	1	RL011/ckit/6 - (1) LED 6" rec can kit, 4000K, 11w, 120/277, 50,000-Hr L70 rated life	1

Fire Station No. 6 -

PRE-RETROFIT			POST RETROFIT	
Location	Existing Fixture Description	Qty	Retrofit Code Description (Ltg Control in RED)	Qty
Rf#-31 Rm - Dorm Room #4	1x2x 1L wm light, F17T8 17w, electronic ballast	2	RLT821dw - (1) 2' LED T8 lamp 7w, Type B, direct wire, 50,000-Hr L70 rated life, remove existing ballast from service	2
Rf#-32 Rm - RR #1	CF 1L rec can?", CFP-32w, CF ballast	2	RL011/ckit/6 - (1) LED 6" rec can kit, 4000K, 11w, 120/277, 50,000-Hr L70 rated life	2
Rf#-33 Rm - RR #1	1x4x 2L rec trf, F32T8 32w, electronic ballast	1	RLT842dw - (2) 4' LED T8 lamp 10.5w, Type B, direct wire, 50,000-Hr L70 rated life, remove existing ballast from service	1
Rf#-34 Rm - RR #2	CF 1L rec can?", CFP-32w, CF ballast	2	RL011/ckit/6 - (1) LED 6" rec can kit, 4000K, 11w, 120/277, 50,000-Hr L70 rated life	2
Rf#-35 Rm - RR #2	1x4x 2L rec trf, F32T8 32w, electronic ballast	1	RLT842dw - (2) 4' LED T8 lamp 10.5w, Type B, direct wire, 50,000-Hr L70 rated life, remove existing ballast from service	1
Rf#-36 Rm - RR #3	CF 1L rec can?", CFP-32w, CF ballast	2	RL011/ckit/6 - (1) LED 6" rec can kit, 4000K, 11w, 120/277, 50,000-Hr L70 rated life	2
Rf#-37 Rm - RR #3	1x4x 2L rec trf, F32T8 32w, electronic ballast	1	RLT842dw - (2) 4' LED T8 lamp 10.5w, Type B, direct wire, 50,000-Hr L70 rated life, remove existing ballast from service	1
Rf#-38 Rm - Electrical Rm (ext entry)	(est) 1x4x 2L sm strip, F32T8 32w, electronic ballast	1	RLT842dw - (2) 4' LED T8 lamp 10.5w, Type B, direct wire, 50,000-Hr L70 rated life, remove existing ballast from service	1
Rf#-39 Rm - Ext - Wall Mount	MH 1L wm wall dome, MH 50W E26, HID ballast	8	RL0241/s/md - (1) LED 24w corn cob style screw in lamp, 120/277, 50,000-Hr rated life, 5700K, medium base	8
Rf#-40 Rm - Ext - Ceiling Mount	CF 1L rec can 8", CFP-32w, CF ballast	4	RL011/ckit/6t8 - (1) LED 6" rec can kit, 4000K, 11w, 120/277, 50,000-Hr L70 rated life, (1) 8" trim ring extender	4
Rf#-41 Rm - Ext - Shelter	1x4 1L Vapor Tite, F32T8 32w, electronic ballast	6	RLT841dw - (1) 4' LED T8 lamp 10.5w, Type B, direct wire, 50,000-Hr L70 rated life, remove existing ballast from service	6
Rf#-42 Rm - Shed	2x4x 2L rec trf, F32T8 32w, electronic ballast	2	RLT842dw - (2) 4' LED T8 lamp 10.5w, Type B, direct wire, 50,000-Hr L70 rated life, remove existing ballast from service	2
Rf#-43 Rm - Fuel Area	1x4 1L Vapor Tite, F32T8 32w, electronic ballast	4	RLT841dw - (1) 4' LED T8 lamp 10.5w, Type B, direct wire, 50,000-Hr L70 rated life, remove existing ballast from service	4
Rf#-44 Rm - Ext - Pole Mount	LPS 1L SB SqP orange, LPS 90w, HID ballast	8	NL040/p/s - New LED area light, pole or bldg. mount, 50,000-Hr L70 rated life, 40w (Vly) oemB	8
Rf#-45 Rm - Ext - Pole Mount	HPS 1L flood, adj tenon, HPS 200W, HID ballast	4	NL070/p/s - New LED area light, pole or bldg. mount, 50,000-Hr L70 rated life, 70w (Vly) oemB	4
	Qty for Fire Station No. 6 :	**149**		**149**

Fire Station No. 7 -

PRE-RETROFIT			POST RETROFIT	
Location	Existing Fixture Description	Qty	Retrofit Code Description (Ltg Control in RED)	Qty
Building/Area: Main				
1st Floor				
Rf#-1 Rm - Lobby	CF 2L rec can 8", CFP-26w, CF ballast	2	RL011/ckit/6t8 - (1) LED 6" rec can kit, 4000K, 11w, 120/277, 50,000-Hr L70 rated life, (1) 8" trim ring extender	2
Rf#-2 Rm - RR	CF 2L rec can 8", CFP-26w, CF ballast	1	RL011/ckit/6t8 - (1) LED 6" rec can kit, 4000K, 11w, 120/277, 50,000-Hr L70 rated life, (1) 8" trim ring extender	1
Rf#-3 Rm - RR	1x4x 2L rec trf, F32T8 32w, electronic ballast	1	RLT842dw - (2) 4' LED T8 lamp 10.5w, Type B, direct wire, 50,000-Hr L70 rated life, remove existing ballast from service	1
Rf#-4 Rm - Office	CF 2L rec can 8", CFP-26w, CF ballast	5	RL011/ckit/6t8 - (1) LED 6" rec can kit, 4000K, 11w, 120/277, 50,000-Hr L70 rated life, (1) 8" trim ring extender	5
Rf#-5 Rm - Office	1x4x 2L rec trf, F32T8 32w, electronic ballast	9	RLT842dw - (2) 4' LED T8 lamp 10.5w, Type B, direct wire, 50,000-Hr L70 rated life, remove existing ballast from service	9
Rf#-6 Rm - Hall	CF 2L rec can 8", CFP-26w, CF ballast	6	RL011/ckit/6t8 - (1) LED 6" rec can kit, 4000K, 11w, 120/277, 50,000-Hr L70 rated life, (1) 8" trim ring extender	6
Rf#-7 Rm - Hall	2x4x 2L rec trf, F32T8 32w, electronic ballast	7	RLT842dw - (2) 4' LED T8 lamp 10.5w, Type B, direct wire, 50,000-Hr L70 rated life, remove existing ballast from service	7
Rf#-8 Rm - Office	2x4x 3L rec trf, F32T8 32w, electronic ballast	2	RLT843dw - (3) 4' LED T8 lamp 10.5w, Type B, direct wire, 50,000-Hr L70 rated life, remove existing ballast from service	2
Rf#-9 Rm - Sleep 1	CF 2L rec can 8", CFP-26w, CF ballast	1	RL011/ckit/6t8 - (1) LED 6" rec can kit, 4000K, 11w, 120/277, 50,000-Hr L70 rated life, (1) 8" trim ring extender	1
Rf#-10 Rm - Sleep 1	1x2x 2L wm light (reading), F17T8 17w, electronic ballast	2	RLT822dw - (2) 2' LED T8 lamp 7w, Type B, direct wire, 50,000-Hr L70 rated life, remove existing ballast from service	2
Rf#-11 Rm - Sleep 2	CF 2L rec can 8", CFP-26w, CF ballast	1	RL011/ckit/6t8 - (1) LED 6" rec can kit, 4000K, 11w, 120/277, 50,000-Hr L70 rated life, (1) 8" trim ring extender	1
Rf#-12 Rm - Sleep 2	1x2x 2L wm light (reading), F17T8 17w, electronic ballast	2	RLT822dw - (2) 2' LED T8 lamp 7w, Type B, direct wire, 50,000-Hr L70 rated life, remove existing ballast from service	2
Rf#-13 Rm - Sleep 3	CF 2L rec can 8", CFP-26w, CF ballast	1	RL011/ckit/6t8 - (1) LED 6" rec can kit, 4000K, 11w, 120/277, 50,000-Hr L70 rated life, (1) 8" trim ring extender	1
Rf#-14 Rm - Sleep 3	1x2x 2L wm light (reading), F17T8 17w, electronic ballast	2	RLT822dw - (2) 2' LED T8 lamp 7w, Type B, direct wire, 50,000-Hr L70 rated life, remove existing ballast from service	2
Rf#-15 Rm - Sleep 4	CF 2L rec can 8", CFP-26w, CF ballast	1	RL011/ckit/6t8 - (1) LED 6" rec can kit, 4000K, 11w, 120/277, 50,000-Hr L70 rated life, (1) 8" trim ring extender	1
Rf#-16 Rm - Sleep 4	1x2x 2L wm light (reading), F17T8 17w, electronic ballast	2	RLT822dw - (2) 2' LED T8 lamp 7w, Type B, direct wire, 50,000-Hr L70 rated life, remove existing ballast from service	2
Rf#-17 Rm - Sleep 5	CF 2L rec can 8", CFP-26w, CF ballast	1	RL011/ckit/6t8 - (1) LED 6" rec can kit, 4000K, 11w, 120/277, 50,000-Hr L70 rated life, (1) 8" trim ring extender	1
Rf#-18 Rm - Sleep 5	1x2x 2L wm light (reading), F17T8 17w, electronic ballast	2	RLT822dw - (2) 2' LED T8 lamp 7w, Type B, direct wire, 50,000-Hr L70 rated life, remove existing ballast from service	2
Rf#-19 Rm - Sleep 6	CF 2L rec can 8", CFP-26w, CF ballast	1	RL011/ckit/6t8 - (1) LED 6" rec can kit, 4000K, 11w, 120/277, 50,000-Hr L70 rated life, (1) 8" trim ring extender	1
Rf#-20 Rm - Sleep 6	1x2x 2L wm light (reading), F17T8 17w, electronic ballast	2	RLT822dw - (2) 2' LED T8 lamp 7w, Type B, direct wire, 50,000-Hr L70 rated life, remove existing ballast from service	2
Rf#-21 Rm - Sleep 7	CF 2L rec can 8", CFP-26w, CF ballast	1	RL011/ckit/6t8 - (1) LED 6" rec can kit, 4000K, 11w, 120/277, 50,000-Hr L70 rated life, (1) 8" trim ring extender	1
Rf#-22 Rm - Sleep 7	1x2x 2L wm light (reading), F17T8 17w, electronic ballast	2	RLT822dw - (2) 2' LED T8 lamp 7w, Type B, direct wire, 50,000-Hr L70 rated life, remove existing ballast from service	2
Rf#-23 Rm - RR1	CF 2L rec can 8", CFP-26w, CF ballast	2	RL011/ckit/6t8 - (1) LED 6" rec can kit, 4000K, 11w, 120/277, 50,000-Hr L70 rated life, (1) 8" trim ring extender	2
Rf#-24 Rm - RR1	1x4x 2L rec trf, F32T8 32w, electronic ballast	1	RLT842dw - (2) 4' LED T8 lamp 10.5w, Type B, direct wire, 50,000-Hr L70 rated life, remove existing ballast from service	1
Rf#-25 Rm - RR2	CF 2L rec can 8", CFP-26w, CF ballast	2	RL011/ckit/6t8 - (1) LED 6" rec can kit, 4000K, 11w, 120/277, 50,000-Hr L70 rated life, (1) 8" trim ring extender	2
Rf#-26 Rm - RR2	1x4x 2L rec trf, F32T8 32w, electronic ballast	1	RLT842dw - (2) 4' LED T8 lamp 10.5w, Type B, direct wire, 50,000-Hr L70 rated life, remove existing ballast from service	1
Rf#-27 Rm - RR3	CF 2L rec can 8", CFP-26w, CF ballast	2	RL011/ckit/6t8 - (1) LED 6" rec can kit, 4000K, 11w, 120/277, 50,000-Hr L70 rated life, (1) 8" trim ring extender	2
Rf#-28 Rm - RR3	1x4x 2L rec trf, F32T8 32w, electronic ballast	1	RLT842dw - (2) 4' LED T8 lamp 10.5w, Type B, direct wire, 50,000-Hr L70 rated life, remove existing ballast from service	1
Rf#-29 Rm - RR4	CF 2L rec can 8", CFP-26w, CF ballast	2	RL011/ckit/6t8 - (1) LED 6" rec can kit, 4000K, 11w, 120/277, 50,000-Hr L70 rated life, (1) 8" trim ring extender	2
Rf#-30 Rm - RR4	1x4x 2L rec trf, F32T8 32w, electronic ballast	1	RLT842dw - (2) 4' LED T8 lamp 10.5w, Type B, direct wire, 50,000-Hr L70 rated life, remove existing ballast from service	1

Fire Station No. 7 -

PRE-RETROFIT			POST RETROFIT	
Location	Existing Fixture Description	Qty	Retrofit Code Description (Ltg Control in RED)	Qty
Rf#-31 Rm - Kitchen	LED 1L track , LED ?w MR16, n/a	7	DND - DND: (do not do, fixtures left as is)	7
Rf#-32 Rm - Kitchen	2x4x 2L rec trf, F32T8 32w, electronic ballast	6	RLT842dw - (2) 4' LED T8 lamp 10.5w, Type B, direct wire, 50,000-Hr L70 rated life, remove existing ballast from service	6
Rf#-33 Rm - Unknown	2x4x 2L rec trf, F32T8 32w, electronic ballast	6	RLT842dw - (2) 4' LED T8 lamp 10.5w, Type B, direct wire, 50,000-Hr L70 rated life, remove existing ballast from service	6
Rf#-34 Rm - Unknown	1x4x 2L rec trf, F32T8 32w, electronic ballast	1	RLT842dw - (2) 4' LED T8 lamp 10.5w, Type B, direct wire, 50,000-Hr L70 rated life, remove existing ballast from service	1
Rf#-35 Rm - TV	2x4x 2L rec trf, F32T8 32w, electronic ballast	6	RL025/tkit24 - (1) LED 25w 2x4 rec trf kit w/volumetric lens 70,000-Hr L70 rated life (ALE) L-DS	6
Rf#-36 Rm - Bay	1x4x 2L rec trf, F32T8 32w, electronic ballast	24	RLT842dw - (2) 4' LED T8 lamp 10.5w, Type B, direct wire, 50,000-Hr L70 rated life, remove existing ballast from service	24
Rf#-37 Rm - Bay	CF 2L rec can 8", CFP-26w, CF ballast	1	RL011/ckit/6t8 - (1) LED 6" rec can kit, 4000K, 11w, 120/277, 50,000-Hr L70 rated life, (1) 8" trim ring extender	1
Rf#-38 Rm - Supply 1	1x4x 2L rec trf, F32T8 32w, electronic ballast	3	RLT842dw - (2) 4' LED T8 lamp 10.5w, Type B, direct wire, 50,000-Hr L70 rated life, remove existing ballast from service	3
Rf#-39 Rm - RR	1x4x 2L rec trf, F32T8 32w, electronic ballast	1	RLT842dw - (2) 4' LED T8 lamp 10.5w, Type B, direct wire, 50,000-Hr L70 rated life, remove existing ballast from service	1
Rf#-40 Rm - Supply 2	1x4x 2L rec trf, F32T8 32w, electronic ballast	3	RLT842dw - (2) 4' LED T8 lamp 10.5w, Type B, direct wire, 50,000-Hr L70 rated life, remove existing ballast from service	3
Rf#-41 Rm - Clothing	1x4x 2L rec trf, F32T8 32w, electronic ballast	8	RLT842dw - (2) 4' LED T8 lamp 10.5w, Type B, direct wire, 50,000-Hr L70 rated life, remove existing ballast from service	8
Rf#-42 Rm - Weights	2x4x 2L rec trf, F32T8 32w, electronic ballast	4	RLT842dw - (2) 4' LED T8 lamp 10.5w, Type B, direct wire, 50,000-Hr L70 rated life, remove existing ballast from service	4
Rf#-43 Rm - Work	1x4x 2L rec trf, F32T8 32w, electronic ballast	3	RLT842dw - (2) 4' LED T8 lamp 10.5w, Type B, direct wire, 50,000-Hr L70 rated life, remove existing ballast from service	3
Rf#-44 Rm - Laundry	1x4x 2L rec trf, F32T8 32w, electronic ballast	2	RLT842dw - (2) 4' LED T8 lamp 10.5w, Type B, direct wire, 50,000-Hr L70 rated life, remove existing ballast from service	2
Rf#-45 Rm - Laundry	CF 2L rec can 8", CFP-26w, CF ballast	6	RL011/ckit/6t8 - (1) LED 6" rec can kit, 4000K, 11w, 120/277, 50,000-Hr L70 rated life, (1) 8" trim ring extender	6
Rf#-46 Rm - Water	1x4x 2L rec trf, F32T8 32w, electronic ballast	1	RLT842dw - (2) 4' LED T8 lamp 10.5w, Type B, direct wire, 50,000-Hr L70 rated life, remove existing ballast from service	1
Rf#-47 Rm - Data	1x4x 2L rec trf, F32T8 32w, electronic ballast	1	RLT842dw - (2) 4' LED T8 lamp 10.5w, Type B, direct wire, 50,000-Hr L70 rated life, remove existing ballast from service	1
Rf#-48 Rm - Electrical	1x4x 2L rec trf, F32T8 32w, electronic ballast	1	RLT842dw - (2) 4' LED T8 lamp 10.5w, Type B, direct wire, 50,000-Hr L70 rated life, remove existing ballast from service	1
Rf#-49 Rm - Ext - Ceiling Mount	CF 2L rec can 8", CFP-26w, CF ballast	2	RL011/ckit/6t8 - (1) LED 6" rec can kit, 4000K, 11w, 120/277, 50,000-Hr L70 rated life, (1) 8" trim ring extender	2
Rf#-50 Rm - Ext - Wall Mount	LED 1L wm wall dome, LED CC, n/a		DND - DND: (do not do, fixtures left as is)	0
Rf#-51 Rm - Shelter - Fuel	1x4 1L Varpor Tite, F32T8 32w, electronic ballast	11	RLT841dw - (1) 4' LED T8 lamp 10.5w, Type B, direct wire, 50,000-Hr L70 rated life, remove existing ballast from service	11
Rf#-52 Rm - Shed	1x4x 2L rec trf, F32T8 32w, electronic ballast	2	RLT842dw - (2) 4' LED T8 lamp 10.5w, Type B, direct wire, 50,000-Hr L70 rated life, remove existing ballast from service	2
Rf#-53 Rm - Ext - Wall Mount	HPS 1L rec square, HPS 50W E26, HID ballast	10	RL0161/s/md - (1) LED 16w A21 style screw in lamp, 120/277, 50,000-Hr rated life, 4000K, medium base	10
Rf#-54 Rm - Ext - Pole Mount	HPS 1L flood, trunion, HPS 200W, HID ballast	4	NL070/p/s - New LED area light, pole or bldg. mount, 50,000-Hr L70 rated life, 70w (Vly) oemB	4
Rf#-55 Rm - Ext - Pole Mount	LPS 1L SB Sqp grey, LPS 90w, HID ballast	12	NL040/p/s - New LED area light, pole or bldg. mount, 50,000-Hr L70 rated life, 40w (Vly) oemB	12
	Qty for Fire Station No. 7 :	**191**		**191**

Grape Day Park -

PRE-RETROFIT			POST RETROFIT	
Location	**Existing Fixture Description**	**Qty**	**Retrofit Code Description (Ltg Control in RED)**	**Qty**
Building/Area: Grape Day Park & Bldg Walks				
1st Floor				
Rf#-1 Rm - Ext - Pole Mount	MH 1L post top 2 3/8 Grey, MH 100W E26, HID ballast	36	RL0341/s/md - (1) LED 34w A21 style screw in lamp, 120/277, 50,000-Hr rated life, 5000K, medium base	36
Rf#-2 Rm - All other Exterior Space	DND (do not do, left as is), no lighitng, n/a		DND - DND: (do not do, fixtures left as is)	0
	Qty for Grape Day Park :	**36**		**36**

Hale Avenue Resource & Recovery Facility ("HARRF") -

PRE-RETROFIT			POST RETROFIT	
Location	Existing Fixture Description	Qty	Retrofit Code Description (Ltg Control in RED)	Qty
Building/Area: Admin Wings				
1st Floor				
Rf#-1 Rm - All Interior Space	DND (do not do, left as is), LED ?w, n/a		DND - DND: (do not do, fixtures left as is)	0
Rf#-2 Rm - All Exterior Space	DND (do not do, left as is), LED ?w, n/a		DND - DND: (do not do, fixtures left as is)	0
Building/Area: Areation Basins				
1st Floor				
Rf#-17 Rm - All Exterior Space	DND (do not do, left as is), LED ?w, n/a		DND - DND: (do not do, fixtures left as is)	0
Building/Area: Butler Building				
1st Floor				
Rf#-34 Rm - Butler Building open area	1x4x 2L sm ind hood, F32T8 32w, electronic ballast	28	RLT842dw - (2) 4' LED T8 lamp 10.5w, Type B, direct wire, 50,000-Hr L70 rated life, remove existing ballast from service	28
Rf#-35 Rm - All other Interior Space	DND (do not do, left as is), LED ?w, n/a		DND - DND: (do not do, fixtures left as is)	0
Rf#-36 Rm - Ext-Bldg Mnt (eaves)	HPS 1L sm square, HPS 70w, HID ballast	2	NL020/sq - New LED surface mnt sq., 50,000-Hr L70 rated life, 20w (ALE)	2
Rf#-37 Rm - Ext-Bldg Mnt (walls)	HPS 1L wm wall pack FT lrg, HPS 100w, HID ballast	1	NL030/wp/ft - New LED wall pack (FT), 50,000-Hr L70 rated life, 30w ()	1
Rf#-38 Rm - All other Exterior Space	DND (do not do, left as is), LED ?w, n/a		DND - DND: (do not do, fixtures left as is)	0
Building/Area: Chem Enh Prim Treat				
1st Floor				
Rf#-10 Rm - CEPT	1x4x 2L sm vapor tight, F32T8 32w, electronic ballast	1	RLT842dw - (2) 4' LED T8 lamp 10.5w, Type B, direct wire, 50,000-Hr L70 rated life, remove existing ballast from service	1
Rf#-11 Rm - All other Interior Space	DND (do not do, left as is), LED ?w, n/a		DND - DND: (do not do, fixtures left as is)	0
Rf#-12 Rm - All Exterior Space	DND (do not do, left as is), LED ?w, n/a		DND - DND: (do not do, fixtures left as is)	0
Building/Area: Chem Tank Farm				
1st Floor				
Rf#-24 Rm - All Interior Space	DND (do not do, left as is), LED ?w, n/a		DND - DND: (do not do, fixtures left as is)	0
Rf#-25 Rm - All Exterior Space	DND (do not do, left as is), LED ?w, n/a		DND - DND: (do not do, fixtures left as is)	0
Building/Area: Chlorine Contact Basin				
1st Floor				
Rf#-67 Rm - No Interior Space	DND (do not do, left as is), n/a, n/a		DND - DND: (do not do, fixtures left as is)	0
Rf#-68 Rm - All other Exterior Space	DND (do not do, left as is), LED ?w, n/a		DND - DND: (do not do, fixtures left as is)	0
Building/Area: DAF				
1st Floor				
Rf#-31 Rm - All Interior Space	DND (do not do, left as is), LED ?w, n/a		DND - DND: (do not do, fixtures left as is)	0
Rf#-32 Rm - ? Room	1x4x 2L sm vapor tight, F32T8 32w, electronic ballast	4	RLT842dw - (2) 4' LED T8 lamp 10.5w, Type B, direct wire, 50,000-Hr L70 rated life, remove existing ballast from service	4
Rf#-33 Rm - Ext-Bldg Mnt (walls)	HPS 1L wm wall pack FT lrg, HPS 100w, HID ballast	7	NL030/wp/ft - New LED wall pack (FT), 50,000-Hr L70 rated life, 30w ()	7
Building/Area: DAF ? (by Seconday Digester)				
1st Floor				
Rf#-39 Rm - All Interior Space	DND (do not do, left as is), LED ?w, n/a		DND - DND: (do not do, fixtures left as is)	0
Rf#-40 Rm - All Exterior Space	DND (do not do, left as is), LED ?w, n/a		DND - DND: (do not do, fixtures left as is)	0

Hale Avenue Resource & Recovery Facility ("HARRF") -

PRE-RETROFIT			POST RETROFIT	
Location	**Existing Fixture Description**	**Qty**	**Retrofit Code Description (Ltg Control in RED)**	**Qty**
Building/Area: Generator Bldg				
1st Floor				
Rf#-41 Rm - Backup Gen Room	1x4x 2L sm ind hood, F32T8 32w, electronic ballast	16	RLT842dw - (2) 4' LED T8 lamp 10.5w, Type B, direct wire, 50,000-Hr L70 rated life, remove existing ballast from service	16
Rf#-42 Rm - Small Bldg nxt to above	1x4x 2L sm vapor tight, F32T8 32w, electronic ballast	2	RLT842dw - (2) 4' LED T8 lamp 10.5w, Type B, direct wire, 50,000-Hr L70 rated life, remove existing ballast from service	2
Rf#-43 Rm - All other Interior Space	DND (do not do, left as is), LED ?w, n/a		DND - DND: (do not do, fixtures left as is)	0
Rf#-44 Rm - Ext-Bldg Mnt (walls)	HPS 1L wm wall pack FT lrg, HPS 100w, HID ballast	2	NL030/wp/ft - New LED wall pack (FT), 50,000-Hr L70 rated life, 30w ()	2
Rf#-45 Rm - All other Exterior Space	DND (do not do, left as is), LED ?w, n/a		DND - DND: (do not do, fixtures left as is)	0
Building/Area: Headworks				
1st Floor				
Rf#-3 Rm - All Interior Space	DND (do not do, left as is), LED ?w, n/a		DND - DND: (do not do, fixtures left as is)	0
Rf#-4 Rm - Pump Pit #1	HPS 1L wm wall pack FT lrg, HPS 100w, HID ballast	4	NL030/wp/ft - New LED wall pack (FT), 50,000-Hr L70 rated life, 30w ()	4
Rf#-5 Rm - Pump Pit #2	HPS 1L wm wall pack FT lrg, HPS 100w, HID ballast	4	NL030/wp/ft - New LED wall pack (FT), 50,000-Hr L70 rated life, 30w ()	4
Rf#-6 Rm - All other exterior space	DND (do not do, left as is), LED ?w, n/a		DND - DND: (do not do, fixtures left as is)	0
Building/Area: Maintenance Bldg				
1st Floor				
Rf#-46 Rm - Maintenace Shop (open	1x8x 2L sm vaport tight, F96T8 59w, electronic ballast	11	NL055/8s - New 8' LED surface mount narrow wrap, 50,000-Hr L70 rated life, 55w, 4000K (ALE)	11
Rf#-47 Rm - Maintenace Shop (open	1x4x 2L sm box, F32T8 32w, electronic ballast	12	RLT842dw - (2) 4' LED T8 lamp 10.5w, Type B, direct wire, 50,000-Hr L70 rated life, remove existing ballast from service	12
Rf#-48 Rm - All other Interior Space	DND (do not do, left as is), LED ?w, n/a		DND - DND: (do not do, fixtures left as is)	0
Rf#-49 Rm - All Exterior Space	DND (do not do, left as is), LED ?w, n/a		DND - DND: (do not do, fixtures left as is)	0
Building/Area: Order Control				
1st Floor				
Rf#-7 Rm - All Interior Space	DND (do not do, left as is), LED ?w, n/a		DND - DND: (do not do, fixtures left as is)	0
Rf#-8 Rm - Ext-Bldg Mnt (walls)	HPS 1L wm wall pack FT lrg, HPS 100w, HID ballast	4	NL030/wp/ft - New LED wall pack (FT), 50,000-Hr L70 rated life, 30w ()	4
Rf#-9 Rm - All other exterior space	DND (do not do, left as is), LED ?w, n/a		DND - DND: (do not do, fixtures left as is)	0
Building/Area: Primary Clarifiers				
1st Floor				
Rf#-13 Rm - Primary Sludge Pump Rm #1	1x4x 2L sm vapor tight, F32T8 32w, electronic ballast	10	RLT842dw - (2) 4' LED T8 lamp 10.5w, Type B, direct wire, 50,000-Hr L70 rated life, remove existing ballast from service	10
Rf#-14 Rm - Pipe Galley Primary Clarifiers	1x4x 2L sm vapor tight, F32T8 32w, electronic ballast	12	RLT842dw - (2) 4' LED T8 lamp 10.5w, Type B, direct wire, 50,000-Hr L70 rated life, remove existing ballast from service	12
Rf#-15 Rm - All other Interior Space	DND (do not do, left as is), LED ?w, n/a		DND - DND: (do not do, fixtures left as is)	0
Rf#-16 Rm - All Exterior Space	DND (do not do, left as is), LED ?w, n/a		DND - DND: (do not do, fixtures left as is)	0
Building/Area: Primary Digestors 1-3				
1st Floor				
Rf#-50 Rm - No Interior Space	DND (do not do, left as is), n/a, n/a		DND - DND: (do not do, fixtures left as is)	0
Rf#-51 Rm - Ext-Pole Mnt	HPS 1L shoe box, HPS 150w, HID ballast	5	NL040/p/s - New LED area light, pole or bldg. mount, 50,000-Hr L70 rated life, 40w (Vly) oemB	5
Rf#-52 Rm - All other Exterior Space	DND (do not do, left as is), LED ?w, n/a		DND - DND: (do not do, fixtures left as is)	0

Hale Avenue Resource & Recovery Facility ("HARRF") -

PRE-RETROFIT			POST RETROFIT	
Location	Existing Fixture Description	Qty	Retrofit Code Description (Ltg Control in RED)	Qty
Building/Area: RAS/WAS Pump Station				
1st Floor				
Rf#-71 Rm - All Interior Space	DND (do not do, left as is), LED ?w, n/a		DND - DND: (do not do, fixtures left as is)	0
Rf#-72 Rm - Ext-Bldg Mnt (walls) pump pit	HPS 1L wm wall pack FT lrg, HPS 100w, HID ballast	2	NL030/wp/ft - New LED wall pack (FT), 50,000-Hr L70 rated life, 30w ()	2
Rf#-73 Rm - All other Exterior Space	DND (do not do, left as is), LED ?w, n/a		DND - DND: (do not do, fixtures left as is)	0
Building/Area: Rentention Resivour				
1st Floor				
Rf#-62 Rm - No Interior Space	DND (do not do, left as is), n/a, n/a		DND - DND: (do not do, fixtures left as is)	0
Rf#-63 Rm - Ext-Pole Mnt	HPS 1L shoe box, HPS 250w, HID ballast	2	NL070/p/s - New LED area light, pole or bldg. mount, 50,000-Hr L70 rated life, 70w (Vly) oemB	2
Rf#-64 Rm - Ext-Pole Mnt	LED 1L shoe box, LED ?w, n/a	2	DND - DND: (do not do, fixtures left as is)	2
Building/Area: Screen & Influent Pump				
1st Floor				
Rf#-26 Rm - ? Room	1x4x 2L sm vapor tight, F32T8 32w, electronic ballast	4	RLT842dw - (2) 4' LED T8 lamp 10.5w, Type B, direct wire, 50,000-Hr L70 rated life, remove existing ballast from service	4
Rf#-27 Rm - Ext-Bldg Mnt (walls)	HPS 1L wm wall pack FT lrg, HPS 100w, HID ballast	4	NL030/wp/ft - New LED wall pack (FT), 50,000-Hr L70 rated life, 30w ()	4
Rf#-28 Rm - All other Exterior Space	DND (do not do, left as is), LED ?w, n/a		DND - DND: (do not do, fixtures left as is)	0
Building/Area: Secodary Eff Pump St (SEPS)				
1st Floor				
Rf#-65 Rm - No Interior Space	DND (do not do, left as is), n/a, n/a		DND - DND: (do not do, fixtures left as is)	0
Rf#-66 Rm - Ext-Pole Mnt	HPS 1L shoe box, HPS 250w, HID ballast	9	NL070/p/s - New LED area light, pole or bldg. mount, 50,000-Hr L70 rated life, 70w (Vly) oemB	9
Building/Area: Solids Building				
1st Floor				
Rf#-59 Rm - All other Interior Space	DND (do not do, left as is), LED ?w, n/a		DND - DND: (do not do, fixtures left as is)	0
Rf#-60 Rm - Ext-Pole Mnt	HPS 1L shoe box, HPS 150w, HID ballast	3	NL040/p/s - New LED area light, pole or bldg. mount, 50,000-Hr L70 rated life, 40w (Vly) oemB	3
Rf#-61 Rm - All other Exterior Space	DND (do not do, left as is), LED ?w, n/a		DND - DND: (do not do, fixtures left as is)	0
2nd Floor				
Rf#-53 Rm - Centrifuge area	HPS 1L large pm square, HPS 400w, HID ballast	17	NL150/exp - New LED surface mnt dome., 50,000-Hr L70 rated life, 150w (Rb)	17
Rf#-54 Rm - Centrifuge area	1x4x 2L sm vapor tight, F32T8 32w, electronic ballast	6	RLT842dw - (2) 4' LED T8 lamp 10.5w, Type B, direct wire, 50,000-Hr L70 rated life, remove existing ballast from service	6
Rf#-55 Rm - Compressor room in	1x4x 2L sm ind hood, F32T8 32w, electronic ballast	1	RLT842dw - (2) 4' LED T8 lamp 10.5w, Type B, direct wire, 50,000-Hr L70 rated life, remove existing ballast from service	1
Rf#-56 Rm - Centrifuge Office area	2x4x 4L rec trf, F32T8 32w, electronic ballast	7	RLT844dw - (4) 4' LED T8 lamp 10.5w, Type B, direct wire, 50,000-Hr L70 rated life, remove existing ballast from service	7
Rf#-57 Rm - Centrifuge Office area RR	Inc. 1L sm fxt, Inc. 60w, n/a	1	RL091/s - (1) LED 8.5w A19 screw in lamp, 4000K	1
Rf#-58 Rm - Centrifuge MCC	2x4x 4L rec trf, F32T8 32w, electronic ballast	2	RLT844dw - (4) 4' LED T8 lamp 10.5w, Type B, direct wire, 50,000-Hr L70 rated life, remove existing ballast from service	2
Building/Area: Tertiary Filters				
1st Floor				
Rf#-18 Rm - Tertiary Control area	1x4x 2L sm ind hood, F32T8 32w, electronic ballast	6	RLT842dw - (2) 4' LED T8 lamp 10.5w, Type B, direct wire, 50,000-Hr L70 rated life, remove existing ballast from service	6
Rf#-19 Rm - Tertiary Galley (samples chase)	1x4x 2L sm ind hood, F32T8 32w, electronic ballast	7	RLT842dw - (2) 4' LED T8 lamp 10.5w, Type B, direct wire, 50,000-Hr L70 rated life, remove existing ballast from service	7

Hale Avenue Resource & Recovery Facility ("HARRF") -

PRE-RETROFIT			POST RETROFIT	
Location	**Existing Fixture Description**	**Qty**	**Retrofit Code Description (Ltg Control in RED)**	**Qty**
Rf#-20 Rm - All other interior Space	DND (do not do, left as is), LED ?w, n/a		DND - DND: (do not do, fixtures left as is)	0
Rf#-21 Rm - Ext-Pole Mnt (Tertiary)	HPS 1L shoe box, HPS 150w, HID ballast	15	NL040/p/s - New LED area light, pole or bldg. mount, 50,000-Hr L70 rated life, 40w (Vly) oemB	15
Rf#-22 Rm - Ext-Bldg Mnt (walls)	HPS 1L wm wall pack FT lrg, HPS 100w, HID ballast	2	NL030/wp/ft - New LED wall pack (FT), 50,000-Hr L70 rated life, 30w ()	2
Rf#-23 Rm - All other Exterior Space	DND (do not do, left as is), LED ?w, n/a		DND - DND: (do not do, fixtures left as is)	0

Building/Area: Utility Water Pumps

1st Floor

Rf#-29 Rm - All Interior Space	DND (do not do, left as is), LED ?w, n/a		DND - DND: (do not do, fixtures left as is)	0
Rf#-30 Rm - All Exterior Space	DND (do not do, left as is), LED ?w, n/a		DND - DND: (do not do, fixtures left as is)	0

Building/Area: WAS

1st Floor

Rf#-69 Rm - No Interior Space	DND (do not do, left as is), n/a, n/a		DND - DND: (do not do, fixtures left as is)	0
Rf#-70 Rm - All other Exterior Space	DND (do not do, left as is), LED ?w, n/a		DND - DND: (do not do, fixtures left as is)	0

Hale Avenue Resource & Recovery Facility ("HARRF") : **215** **215**

Jesmond Dene Park -

PRE-RETROFIT			POST RETROFIT	
Location	**Existing Fixture Description**	**Qty**	**Retrofit Code Description (Ltg Control in RED)**	**Qty**
Building/Area: RR Building				
1st Floor				
Rf#-2 Rm - Ext-Pole Mnt (parking and walkway)	DND (do not do, left as is), LED ?w, n/a		DND - DND: (do not do, fixtures left as is)	0
Rf#-3 Rm - Ext-Bldg Mnt (walls) RR entry	LED 1L square, LED ?w, n/a	1	DND - DND: (do not do, fixtures left as is)	1
Rf#-4 Rm - B RR	1x4x 2L sm strip TG wire guard, F32T8 32w, electronic ballast	2	NL020/sq - New LED surface mnt sq., 50,000-Hr L70 rated life, 20w (ALE)	2
Rf#-5 Rm - G RR	1x4x 2L sm strip TG wire guard, F32T8 32w, electronic ballast	2	NL020/sq - New LED surface mnt sq., 50,000-Hr L70 rated life, 20w (ALE)	2
Rf#-6 Rm - storage #1	1x4x 2L sm strip TG wire guard, F32T8 32w, electronic ballast	2	RLT842dw - (2) 4' LED T8 lamp 10.5w, Type B, direct wire, 50,000-Hr L70 rated life, remove existing ballast from service	2
Rf#-7 Rm - equipment room	1x4x 2L sm strip TG wire guard, F32T8 32w, electronic ballast	2	RLT842dw - (2) 4' LED T8 lamp 10.5w, Type B, direct wire, 50,000-Hr L70 rated life, remove existing ballast from service	2
Rf#-8 Rm - chalking equipment	LED 1L fxt, LED ?w SI P38, n/a	1	NL020/sq - New LED surface mnt sq., 50,000-Hr L70 rated life, 20w (ALE)	1
Rf#-9 Rm - Ext-Bldg Mnt (walls)	HPS 1L wm wall pack LG, HPS 100w, HID ballast	6	NL028/wp/ft - New LED wall pack (FT), 50,000-Hr L70 rated life, 28w (MAX)	6
Building/Area: Sports Fields				
1st Floor				
Rf#-1 Rm - All Sports Fields	DND (do not do, left as is), MUSCO LED, n/a		DND - DND: (do not do, fixtures left as is)	0
	Qty for Jesmond Dene Park :	**16**		**16**

Kit Carson Park -

PRE-RETROFIT			POST RETROFIT	
Location	Existing Fixture Description	Qty	Retrofit Code Description (Ltg Control in RED)	Qty
Building/Area: Adult Softball				
1st Floor				
Rf#-65 Rm - B RR	LED 1L screw in, LED ?w, n/a	3	DND - DND: (do not do, fixtures left as is)	3
Rf#-66 Rm - G RR	LED 1L screw in, LED ?w, n/a	3	DND - DND: (do not do, fixtures left as is)	3
Rf#-67 Rm - chase	1x8x 1L sm strip, F96T12 60w, magnetic ballast	2	NL055/8s - New 8' LED surface mount narrow wrap, 50,000-Hr L70 rated life, 55w, 4000K (ALE)	2
Rf#-68 Rm - Snack bar	(est) 1x4x 2L sm wp, F32T8 32w, electronic ballast	4	RLT842dw - (2) 4' LED T8 lamp 10.5w, Type B, direct wire, 50,000-Hr L70 rated life, remove existing ballast from service	4
Rf#-69 Rm - ump rooom	(est) 1x4x 2L sm wp, F32T8 32w, electronic ballast	4	RLT842dw - (2) 4' LED T8 lamp 10.5w, Type B, direct wire, 50,000-Hr L70 rated life, remove existing ballast from service	4
Rf#-70 Rm - Ext-Bldg Mnt (walls)	LPS 1L wm wall pack FT, LPS 55w, HID ballast	4	NL028/wp/ft - New LED wall pack (FT), 50,000-Hr L70 rated life, 28w (MAX)	4
Building/Area: Amphitheater				
1st Floor				
Rf#-11 Rm - Back stage walkway	1x8x 2L sm strip (narrow), F96T12 60w, magnetic ballast	3	NL055/8s - New 8' LED surface mount narrow wrap, 50,000-Hr L70 rated life, 55w, 4000K (ALE)	3
Rf#-12 Rm - Back stage walkway	1x8x 4L sm strip (narrow), TLED, electronic ballast	1	DND - DND: (do not do, fixtures left as is)	1
Rf#-13 Rm - Old B RR	DND (do not do, left as is), LED ?w, n/a		DND - DND: (do not do, fixtures left as is)	0
Rf#-14 Rm - Old G RR	DND (do not do, left as is), LED ?w, n/a		DND - DND: (do not do, fixtures left as is)	0
Rf#-15 Rm - Ext-Walkway	1x4x 2L sm box, F32T8 32w, electronic ballast	2	RLT842dw - (2) 4' LED T8 lamp 10.5w, Type B, direct wire, 50,000-Hr L70 rated life, remove existing ballast from service	2
Rf#-16 Rm - Amphitheater (seating	MH 1L flood, tenon, MH 400w, HID ballast	12	NL100/p/sbt - New LED area light, pole or bldg. mount, 50,000-Hr L70 rated life, 100w (Vly) oemB	12
Rf#-17 Rm - Ext-Bldg Mnt (walls) Amphitheater	CF 1L wm vandal, CFP-26w, CF ballast	7	NL012/wp/rb - New LED wall pack full, 50,000-Hr L70 rated life, 12w, built in 120/277v photo cell (Rb)	7
Rf#-18 Rm - Snack area RR #1	(est) 1x4x 2L sm wp, F32T8 32w, electronic ballast	4	RLT842dw - (2) 4' LED T8 lamp 10.5w, Type B, direct wire, 50,000-Hr L70 rated life, remove existing ballast from service	4
Rf#-19 Rm - B & G RR (RR#1)	DND (do not do, left as is), LED ?w, n/a		DND - DND: (do not do, fixtures left as is)	0
Rf#-20 Rm - Plumbing Chase (RR#1)	Inc. 1L bare bulb, Inc. 60w, n/a	1	RL091/s - (1) LED 8.5w A19 screw in lamp, 4000K	1
Rf#-21 Rm - Ext-Bldg Mnt (walls) RR#1	CF 1L wm vandal, CFP-26w, CF ballast	3	NL012/wp/rb - New LED wall pack full, 50,000-Hr L70 rated life, 12w, built in 120/277v photo cell (Rb)	3
Rf#-22 Rm - Snack area RR #2	(est) 1x4x 2L sm wp, F32T8 32w, electronic ballast	4	RLT842dw - (2) 4' LED T8 lamp 10.5w, Type B, direct wire, 50,000-Hr L70 rated life, remove existing ballast from service	4
Rf#-23 Rm - B & G RR (RR#2)	1x4x 2L sm vapor tight, F32T8 32w, electronic ballast	4	RLT842dw - (2) 4' LED T8 lamp 10.5w, Type B, direct wire, 50,000-Hr L70 rated life, remove existing ballast from service	4
Rf#-24 Rm - Plumbing Chase (RR#2)	1x4x 2L sm ind hood, F40T12 34w, magnetic ballast	1	RLT842dw - (2) 4' LED T8 lamp 10.5w, Type B, direct wire, 50,000-Hr L70 rated life, remove existing ballast from service	1
Rf#-25 Rm - Ext-Bldg Mnt (walls) RR2	CF 1L wm vandal, CFP-26w, CF ballast	3	NL012/wp/rb - New LED wall pack full, 50,000-Hr L70 rated life, 12w, built in 120/277v photo cell (Rb)	3
Building/Area: Maintenance Bldg				
1st Floor				
Rf#-1 Rm - Garage Bay #1	1x8x 2L sm strip (wide), F96T12 60w, magnetic ballast	3	NL055/8s - New 8' LED surface mount narrow wrap, 50,000-Hr L70 rated life, 55w, 4000K (ALE)	3
Rf#-2 Rm - Garage Bay #2	1x8x 2L sm strip (wide), F96T12 60w, magnetic ballast	4	NL055/8s - New 8' LED surface mount narrow wrap, 50,000-Hr L70 rated life, 55w, 4000K (ALE)	4
Rf#-3 Rm - Storage room	1x4x 2L sm ind hood, F32T8 32w, electronic ballast	1	RLT842dw - (2) 4' LED T8 lamp 10.5w, Type B, direct wire, 50,000-Hr L70 rated life, remove existing ballast from service	1
Rf#-4 Rm - Ext-Bldg Mnt (walls)	LPS 1L wm wall pack FT, LPS 55w, HID ballast	1	NL028/wp/ft - New LED wall pack (FT), 50,000-Hr L70 rated life, 28w (MAX)	1
Building/Area: Parking Lots and Drives				
1st Floor				
Rf#-84 Rm - Ext-Pole Mnt (parking)	LED 1L fixtures, LED ?w, n/a		DND - DND: (do not do, fixtures left as is)	0

Kit Carson Park -

PRE-RETROFIT			POST RETROFIT	
Location	**Existing Fixture Description**	**Qty**	**Retrofit Code Description (Ltg Control in RED)**	**Qty**
Rf#-85 Rm - Ext-Pole Mnt (drives and parking)	LED 1L post top acorn heads, LED ?w, n/a	27	DND - DND: (do not do, fixtures left as is)	27
Rf#-86 Rm - Ext-Pole Mnt (drives and parking)	LPS 1L post top acron head, LPS 55w, HID ballast	12	RL0451/s/mg - (1) LED 45w corn cob style screw in lamp, 120/277, 50,000-Hr rated life, 5000K, mogul base	12

Building/Area: Ray Love Tennis

1st Floor

Rf#-43 Rm - Ext-Bldg Mnt (walls) main bldg	LPS 1L wm wall pack FT, LPS 90w, HID ballast	2	NL028/wp/ft - New LED wall pack (FT), 50,000-Hr L70 rated life, 28w (MAX)	2
Rf#-44 Rm - Ext-Bldg Mnt (eaves)	CF 2L sm square, CFP-26w, CF ballast	8	NL020/sq - New LED surface mnt sq., 50,000-Hr L70 rated life, 20w (ALE)	8
Rf#-45 Rm - Electrical Rm (ext entry)	1x4x 2L sm strip, TLED, electronic ballast	1	DND - DND: (do not do, fixtures left as is)	1
Rf#-46 Rm - B RR	DND (do not do, left as is), LED ?w, n/a		DND - DND: (do not do, fixtures left as is)	0
Rf#-47 Rm - G RR	DND (do not do, left as is), LED ?w, n/a		DND - DND: (do not do, fixtures left as is)	0
Rf#-48 Rm - Chase	DND (do not do, left as is), LED ?w, n/a		DND - DND: (do not do, fixtures left as is)	0
Rf#-49 Rm - Ext-Bldg Mnt (walls) RR entry	CF 1L wm LP vandal HZ, CFP-18w, CF ballast	1	NL012/wp/rb - New LED wall pack full, 50,000-Hr L70 rated life, 12w, built in 120/277v photo cell (Rb)	1

Building/Area: RR Bldg El Arroyo

1st Floor

Rf#-8 Rm - B & G RR	2x4x 4L troffer (behind cage), TLED, electronic ballast	4	DND - DND: (do not do, fixtures left as is)	4
Rf#-9 Rm - custodial room	1x4x 2L sm strip, F32T8 32w, electronic ballast	1	RLT842dw - (2) 4' LED T8 lamp 10.5w, Type B, direct wire, 50,000-Hr L70 rated life, remove existing ballast from service	1
Rf#-10 Rm - Ext-Bldg Mnt (walls)	CF 1L wm vandal, CFP-26w, CF ballast	3	NL012/wp/rb - New LED wall pack full, 50,000-Hr L70 rated life, 12w, built in 120/277v photo cell (Rb)	3

Building/Area: RR Bldg North

1st Floor

Rf#-5 Rm - B & G RR	2x4x 4L troffer (behind cage), TLED, electronic ballast	4	DND - DND: (do not do, fixtures left as is)	4
Rf#-6 Rm - custodial room	1x4x 2L sm strip, F32T8 32w, electronic ballast	1	RLT842dw - (2) 4' LED T8 lamp 10.5w, Type B, direct wire, 50,000-Hr L70 rated life, remove existing ballast from service	1
Rf#-7 Rm - Ext-Bldg Mnt (walls)	CF 1L wm vandal, CFP-26w, CF ballast	3	NL012/wp/rb - New LED wall pack full, 50,000-Hr L70 rated life, 12w, built in 120/277v photo cell (Rb)	3

Building/Area: Sports Ltg Adult Softball

1st Floor

Rf#-71 Rm - Sports Lighting Pole #P6	LPS 1L shoe box security light, LPS 180w, HID ballast	1	NL070/p/s - New LED area light, pole or bldg. mount, 50,000-Hr L70 rated life, 70w (Vly) oemB	1

Building/Area: Sports Ltg Soccer

1st Floor

Rf#-72 Rm - Sports Lighting Pole #S1	LPS 1L shoe box security light, LPS 180w, HID ballast	1	NL070/p/s - New LED area light, pole or bldg. mount, 50,000-Hr L70 rated life, 70w (Vly) oemB	1
Rf#-73 Rm - Sports Lighting Pole #S2	LPS 1L shoe box security light, LPS 180w, HID ballast	1	NL070/p/s - New LED area light, pole or bldg. mount, 50,000-Hr L70 rated life, 70w (Vly) oemB	1
Rf#-74 Rm - Sports Lighting Pole #S3	LPS 1L shoe box security light, LPS 180w, HID ballast	1	NL070/p/s - New LED area light, pole or bldg. mount, 50,000-Hr L70 rated life, 70w (Vly) oemB	1

Building/Area: Sports Ltg Youth Baseball

1st Floor

Rf#-75 Rm - Sports Lighting Pole #BB1	LPS 1L shoe box security light, LPS 180w, HID ballast	1	NL070/p/s - New LED area light, pole or bldg. mount, 50,000-Hr L70 rated life, 70w (Vly) oemB	1
Rf#-76 Rm - Sports Lighting Pole #BB4	LPS 1L shoe box security light, LPS 180w, HID ballast	1	NL070/p/s - New LED area light, pole or bldg. mount, 50,000-Hr L70 rated life, 70w (Vly) oemB	1
Rf#-77 Rm - Sports Lighting Pole #BB5	LPS 1L shoe box security light, LPS 180w, HID ballast	1	NL070/p/s - New LED area light, pole or bldg. mount, 50,000-Hr L70 rated life, 70w (Vly) oemB	1
Rf#-78 Rm - Sports Lighting Pole #SB2	LPS 1L shoe box security light, LPS 180w, HID ballast	1	NL070/p/s - New LED area light, pole or bldg. mount, 50,000-Hr L70 rated life, 70w (Vly) oemB	1

Kit Carson Park -

PRE-RETROFIT			POST RETROFIT	
Location	**Existing Fixture Description**	**Qty**	**Retrofit Code Description (Ltg Control in RED)**	**Qty**
Rf#-79 Rm - Sports Lighting Pole #SB3	LPS 1L shoe box security light, LPS 180w, HID ballast	1	NL070/p/s - New LED area light, pole or bldg. mount, 50,000-Hr L70 rated life, 70w (Vly) oemB	1
Rf#-80 Rm - Sports Lighting Pole #SB6	LPS 1L shoe box security light, LPS 180w, HID ballast	1	NL070/p/s - New LED area light, pole or bldg. mount, 50,000-Hr L70 rated life, 70w (Vly) oemB	1
Rf#-81 Rm - Sports Lighting Pole #SB7	LPS 1L shoe box security light, LPS 180w, HID ballast	1	NL070/p/s - New LED area light, pole or bldg. mount, 50,000-Hr L70 rated life, 70w (Vly) oemB	1
Rf#-82 Rm - Sports Lighting Pole #SB9	LPS 1L shoe box security light, LPS 180w, HID ballast	1	NL070/p/s - New LED area light, pole or bldg. mount, 50,000-Hr L70 rated life, 70w (Vly) oemB	1
Rf#-83 Rm - Sports Lighting Pole #SB11	LPS 1L shoe box security light, LPS 180w, HID ballast	1	NL070/p/s - New LED area light, pole or bldg. mount, 50,000-Hr L70 rated life, 70w (Vly) oemB	1

Building/Area: Sports Park

1st Floor

Rf#-26 Rm - Main Office	2x4x 3L rec trf, F32T8 32w, electronic ballast	4	RLT843dw - (3) 4' LED T8 lamp 10.5w, Type B, direct wire, 50,000-Hr L70 rated life, remove existing ballast from service	4
Rf#-27 Rm - Office #1 in above	2x4x 3L rec trf, F32T8 32w, electronic ballast	2	RLT843dw - (3) 4' LED T8 lamp 10.5w, Type B, direct wire, 50,000-Hr L70 rated life, remove existing ballast from service	2
Rf#-28 Rm - Reception for Main office	2x2x 2L rec trf, Biax 40w, CF ballast	2	RL017/bx2 - (2) LED BIAX PL-L lamp, direct wire (remove old ballast), 120/277v, 15w, 50,000-Hr L70 rated life	2
Rf#-29 Rm - Reception for Main office	2x2x 2L rec trf, LED 18w, n/a	1	DND - DND: (do not do, fixtures left as is)	1
Rf#-30 Rm - Reception for Main office	2x2x 2L rec trf, FB31T8 32w U6, electronic ballast	1	RLT822udw - (2) 2' LED T8 "U" lamp 15w, Type B, direct wire, 50,000-Hr L70 rated life, remove existing ballast from service (SYL)	1
Rf#-31 Rm - Office #2 in above	1x4x 2L sm wp, F32T8 32w, electronic ballast	1	RLT842dw - (2) 4' LED T8 lamp 10.5w, Type B, direct wire, 50,000-Hr L70 rated life, remove existing ballast from service	1
Rf#-32 Rm - Electrical Rm (ext entry)	1x4x 2L sm wp, F32T8 32w, electronic ballast	1	RLT842dw - (2) 4' LED T8 lamp 10.5w, Type B, direct wire, 50,000-Hr L70 rated life, remove existing ballast from service	1
Rf#-33 Rm - Sports Equip Retail Shop	1x4x 2L sm wp, F32T8 32w, electronic ballast	3	RLT842dw - (2) 4' LED T8 lamp 10.5w, Type B, direct wire, 50,000-Hr L70 rated life, remove existing ballast from service	3
Rf#-34 Rm - Ext-Bldg Mnt (walls) recep	CF 2L flood, knuckle, CFP-18w, CF ballast	2	NL035/fld - New LED flood, knuckle mount, 50,000-Hr L70 rated life, 35w (Key)	2
Rf#-35 Rm - G RR	2x4x 3L rec trf, F32T8 32w, electronic ballast	3	RLT843dw - (3) 4' LED T8 lamp 10.5w, Type B, direct wire, 50,000-Hr L70 rated life, remove existing ballast from service	3
Rf#-36 Rm - B RR	2x4x 3L rec trf, F32T8 32w, electronic ballast	3	RLT843dw - (3) 4' LED T8 lamp 10.5w, Type B, direct wire, 50,000-Hr L70 rated life, remove existing ballast from service	3
Rf#-37 Rm - janitor closet	CF 2L sm square (broken lens), CFP-26w, CF ballast	3	NL020/sq - New LED surface mnt sq., 50,000-Hr L70 rated life, 20w (ALE)	3
Rf#-38 Rm - Ext-Bldg Mnt (eaves(above BG	CF 2L sm square, CFP-26w, CF ballast	4	NL020/sq - New LED surface mnt sq., 50,000-Hr L70 rated life, 20w (ALE)	4
Rf#-39 Rm - Snack shop	(est) 1x4x 2L sm wp, F32T8 32w, electronic ballast	4	RLT842dw - (2) 4' LED T8 lamp 10.5w, Type B, direct wire, 50,000-Hr L70 rated life, remove existing ballast from service	4
Rf#-40 Rm - Hockey Rink #1	CF 6L pm high bays, CFP-42w, CF ballast	42	NL120/hb/sbt - New LED area interior high bay, 75,000-Hr L70 rated life, lens, 120w, dimming capable (ALE) oemB	42
Rf#-41 Rm - Hockey Rink #2	CF 6L pm high bays, CFP-42w, CF ballast	42	NL120/hb/sbt - New LED area interior high bay, 75,000-Hr L70 rated life, lens, 120w, dimming capable (ALE) oemB	42
Rf#-42 Rm - Ext-Bldg Mnt (beam) Hockey Rink	LPS 2L sm shoe box, LPS 90w, HID ballast	4	NL070/sq/bt - New LED area light, pole or bldg. mount, 50,000-Hr L70 rated life, 70w (Vly) oemB	4

Building/Area: Tree Lake

1st Floor

Rf#-61 Rm - B RR	2x4x 3L rec trf, TLED, electronic ballast	3	DND - DND: (do not do, fixtures left as is)	3
Rf#-62 Rm - G RR	2x4x 3L rec trf, TLED, electronic ballast	3	DND - DND: (do not do, fixtures left as is)	3
Rf#-63 Rm - custodial room	(est) 1x4x 2L sm wp, F32T8 32w, electronic ballast	1	RLT842dw - (2) 4' LED T8 lamp 10.5w, Type B, direct wire, 50,000-Hr L70 rated life, remove existing ballast from service	1
Rf#-64 Rm - Ext-Bldg Mnt (walls)	CF 1L wm LP vandal HZ, CFP-26w, CF ballast	3	NL012/wp/rb - New LED wall pack full, 50,000-Hr L70 rated life, 12w, built in 120/277v photo cell (Rb)	3

Building/Area: youth Baseball Field

1st Floor

Rf#-55 Rm - B RR	(est) CFL 1L SI R40, CFS-23w, CF ballast	1	NL020/sq - New LED surface mnt sq., 50,000-Hr L70 rated life, 20w (ALE)	1

Kit Carson Park -

PRE-RETROFIT			POST RETROFIT	
Location	**Existing Fixture Description**	**Qty**	**Retrofit Code Description (Ltg Control in RED)**	**Qty**
Rf#-56 Rm - G RR	(est) CFL 1L SI R40, CFS-23w, CF ballast	1	NL020/sq - New LED surface mnt sq., 50,000-Hr L70 rated life, 20w (ALE)	1
Rf#-57 Rm - Ext-Bldg Mnt (walls) RR entry	CF 1L wm LP vandal HZ, CFP-18w, CF ballast	1	NL012/wp/rb - New LED wall pack full, 50,000-Hr L70 rated life, 12w, built in 120/277v photo cell (Rb)	1
Rf#-58 Rm - custodial room	(est) 1x4x 2L sm wp, F32T8 32w, electronic ballast	1	RLT842dw - (2) 4' LED T8 lamp 10.5w, Type B, direct wire, 50,000-Hr L70 rated life, remove existing ballast from service	1
Rf#-59 Rm - snack room	(est) 1x4x 2L sm wp, F32T8 32w, electronic ballast	4	RLT842dw - (2) 4' LED T8 lamp 10.5w, Type B, direct wire, 50,000-Hr L70 rated life, remove existing ballast from service	4
Rf#-60 Rm - Ext-Bldg Mnt (walls)	CF 1L wm LP vandal HZ, CFP-26w, CF ballast	5	NL012/wp/rb - New LED wall pack full, 50,000-Hr L70 rated life, 12w, built in 120/277v photo cell (Rb)	5

Building/Area: Youth Softball Field

1st Floor

Rf#-50 Rm - B RR	2x4x 3L rec trf, F32T8 32w, electronic ballast	3	RLT843dw - (3) 4' LED T8 lamp 10.5w, Type B, direct wire, 50,000-Hr L70 rated life, remove existing ballast from service	3
Rf#-51 Rm - G RR	2x4x 3L rec trf, F32T8 32w, electronic ballast	3	RLT843dw - (3) 4' LED T8 lamp 10.5w, Type B, direct wire, 50,000-Hr L70 rated life, remove existing ballast from service	3
Rf#-52 Rm - custodial room	(est) 1x4x 2L sm wp, F32T8 32w, electronic ballast	1	RLT842dw - (2) 4' LED T8 lamp 10.5w, Type B, direct wire, 50,000-Hr L70 rated life, remove existing ballast from service	1
Rf#-53 Rm - snack bar	(est) 1x4x 2L sm wp, F32T8 32w, electronic ballast	4	RLT842dw - (2) 4' LED T8 lamp 10.5w, Type B, direct wire, 50,000-Hr L70 rated life, remove existing ballast from service	4
Rf#-54 Rm - Ext-BLdg Mnt (walls)	CF 1L wm LP vandal HZ, CFP-26w, CF ballast	4	NL012/wp/rb - New LED wall pack full, 50,000-Hr L70 rated life, 12w, built in 120/277v photo cell (Rb)	4
	Qty for Kit Carson Park :	**314**		**314**

Lake Wohlford Boat House -

PRE-RETROFIT			POST RETROFIT	
Location	**Existing Fixture Description**	**Qty**	**Retrofit Code Description (Ltg Control in RED)**	**Qty**
Building/Area: Barn				
1st Floor				
Rf#-3 Rm - Interior	2x4x 2L strip, LED, n/a	8	DND - DND: (do not do, fixtures left as is)	8
Rf#-4 Rm - Interior	2x4x 2L sm strip, F32T8 32w, electronic ballast	4	RLT842dw - (2) 4' LED T8 lamp 10.5w, Type B, direct wire, 50,000-Hr L70 rated life, remove existing ballast from service	4
Rf#-5 Rm - Interior	2x4x 4L sm strip, LED, n/a	3	RLT844dw - (4) 4' LED T8 lamp 10.5w, Type B, direct wire, 50,000-Hr L70 rated life, remove existing ballast from service	3
Rf#-6 Rm - Interior	2x4x 4L sm strip, F32T8 32w, electronic ballast	5	RLT844dw - (4) 4' LED T8 lamp 10.5w, Type B, direct wire, 50,000-Hr L70 rated life, remove existing ballast from service	5
Rf#-7 Rm - Office	2x4x 2L sm strip, F32T8 32w, electronic ballast	4	RLT842dw - (2) 4' LED T8 lamp 10.5w, Type B, direct wire, 50,000-Hr L70 rated life, remove existing ballast from service	4
Rf#-8 Rm - Ext - Wall Mount	LED 1L wm wall pack, LED, n/a	2	DND - DND: (do not do, fixtures left as is)	2
Rf#-9 Rm - Ext - Roof Edge	MH 1L flood, trunion, MH 250W, HID ballast	2	NL070/p/s - New LED area light, pole or bldg. mount, 50,000-Hr L70 rated life, 70w (Vly) oemB	2
Building/Area: Boat House				
1st Floor				
Rf#-11 Rm - Interior	1x4x 2L sm vapor tight, F32T8 32w, electronic ballast	1	RLT842dw - (2) 4' LED T8 lamp 10.5w, Type B, direct wire, 50,000-Hr L70 rated life, remove existing ballast from service	1
Rf#-12 Rm - Ext - Pole Mount	LED 1L area lights, LED, n/a	2	DND - DND: (do not do, fixtures left as is)	2
Building/Area: Office Trailer				
1st Floor				
Rf#-2 Rm - Office Trailer	DND (do not do, left as is), LED ?w, n/a		DND - DND: (do not do, fixtures left as is)	0
Building/Area: Parking				
1st Floor				
Rf#-10 Rm - Ext - Pole Mount	LED 1L SB SqP BZ, LED CC, n/a	5	DND - DND: (do not do, fixtures left as is)	5
Building/Area: RR Bldg				
1st Floor				
Rf#-1 Rm - RR Bldg	LPS 1L wm wall pack FT, LPS 55w, HID ballast	4	NL028/wp/ft - New LED wall pack (FT), 50,000-Hr L70 rated life, 28w (MAX)	4
Qty for Lake Wohlford Boat House :		**40**		**40**

Library -

PRE-RETROFIT			POST RETROFIT	
Location	**Existing Fixture Description**	**Qty**	**Retrofit Code Description (Ltg Control in RED)**	**Qty**
Building/Area: Main Building				
1st Floor				
Rf#-31 Rm - Ext-Bldg Mnt (eaves)	DND (do not do, left as is), LED ?w, n/a		DND - DND: (do not do, fixtures left as is)	0
Rf#-32 Rm - Ext-Bldg Mnt (walls)	DND (do not do, left as is), LED ?w, n/a		DND - DND: (do not do, fixtures left as is)	0
Rf#-33 Rm - Ext-Pole Mnt	DND (do not do, left as is), LED ?w, n/a		DND - DND: (do not do, fixtures left as is)	0
2nd Floor				
Rf#-54 Rm - large meeting room	MH 1L pm can, MH 175w, HID ballast	12	NL075/hb/bt - New LED area interior high bay, 75,000-Hr L70 rated life, lens, 75w, dimming capable (ALE) L-DS	12
Rf#-59 Rm - Ext-Bldg Mnt (walls)	DND (do not do, left as is), LED ?w, n/a		DND - DND: (do not do, fixtures left as is)	0
	Qty for Library :	**12**		**12**

Mathes Center -

PRE-RETROFIT			POST RETROFIT	
Location	Existing Fixture Description	Qty	Retrofit Code Description (Ltg Control in RED)	Qty
Building/Area: Main				
1st Floor				
Rf#-1 Rm - Lobby / Hall	2x4x 2L rec trf, F32T8 32w, electronic ballast	4	RLT842dw - (2) 4' LED T8 lamp 10.5w, Type B, direct wire, 50,000-Hr L70 rated life, remove existing ballast from service	4
Rf#-2 Rm - Meeting	2x4x 3L rec trf, F32T8 32w, electronic ballast	12	RLT843dw - (3) 4' LED T8 lamp 10.5w, Type B, direct wire, 50,000-Hr L70 rated life, remove existing ballast from service	12
Rf#-3 Rm - Rec Office	2x4x 3L rec trf, F32T8 32w, electronic ballast	4	RLT843dw - (3) 4' LED T8 lamp 10.5w, Type B, direct wire, 50,000-Hr L70 rated life, remove existing ballast from service	4
Rf#-4 Rm - Dance	2x4x 4L sm box, F32T8 32w, electronic ballast	11	RLT844dw - (4) 4' LED T8 lamp 10.5w, Type B, direct wire, 50,000-Hr L70 rated life, remove existing ballast from service	11
Rf#-5 Rm - WRR	1x4x 2L sm wp, F32T8 32w, electronic ballast	2	RLT842dw - (2) 4' LED T8 lamp 10.5w, Type B, direct wire, 50,000-Hr L70 rated life, remove existing ballast from service	2
Rf#-6 Rm - MRR	1x4x 2L sm wp, F32T8 32w, electronic ballast	2	RLT842dw - (2) 4' LED T8 lamp 10.5w, Type B, direct wire, 50,000-Hr L70 rated life, remove existing ballast from service	2
Rf#-7 Rm - Pioneer	2x4x 3L rec trf, F32T8 32w, electronic ballast	31	RLT843dw - (3) 4' LED T8 lamp 10.5w, Type B, direct wire, 50,000-Hr L70 rated life, remove existing ballast from service	31
Rf#-8 Rm - Office	2x4x 3L rec trf, F32T8 32w, electronic ballast	6	RLT843dw - (3) 4' LED T8 lamp 10.5w, Type B, direct wire, 50,000-Hr L70 rated life, remove existing ballast from service	6
Rf#-9 Rm - Office	2x4x 3L rec trf, F32T8 32w, electronic ballast	2	RLT843dw - (3) 4' LED T8 lamp 10.5w, Type B, direct wire, 50,000-Hr L70 rated life, remove existing ballast from service	2
Rf#-10 Rm - Data	1x4x 2L sm wp, F32T8 32w, electronic ballast	1	RLT842dw - (2) 4' LED T8 lamp 10.5w, Type B, direct wire, 50,000-Hr L70 rated life, remove existing ballast from service	1
Rf#-11 Rm - Storage	1x4x 2L sm wp, F32T8 32w, electronic ballast	1	RLT842dw - (2) 4' LED T8 lamp 10.5w, Type B, direct wire, 50,000-Hr L70 rated life, remove existing ballast from service	1
Rf#-12 Rm - Ext	DND (do not do, left as is), LED ?w, n/a		DND - DND: (do not do, fixtures left as is)	0
	Qty for Mathes Center :	**76**		**76**

City of Escondido - Lighting Detail Report

(sorted by building, floor, area)

Mayflower Dog Park -

PRE-RETROFIT			POST RETROFIT	
Location	**Existing Fixture Description**	**Qty**	**Retrofit Code Description (Ltg Control in RED)**	**Qty**
Building/Area: All				
1st Floor				
Rf#-1 Rm - Any Interior Space	DND (do not do, left as is), n/a, n/a		DND - DND: (do not do, fixtures left as is)	0
Rf#-2 Rm - Dog Park Field 1 Pole #1	LPS 1L pole moun SB, LPS 135w, HID ballast	1	NL070/p/s - New LED area light, pole or bldg. mount, 50,000-Hr L70 rated life, 70w (Vly) oemB	1
Qty for Mayflower Dog Park :		**1**		**1**

City of Escondido - Lighting Detail Report

(sorted by building, floor, area)

Mountain View Park -

PRE-RETROFIT			POST RETROFIT	
Location	**Existing Fixture Description**	**Qty**	**Retrofit Code Description (Ltg Control in RED)**	**Qty**
Building/Area: Ball Fields				
1st Floor				
Rf#-1 Rm - Pole 1	LPS 1L SB sports pole secruity 2-3/8, LPS 180w, HID ballast 480w	1	NL070/p/s - New LED area light, pole or bldg. mount, 50,000-Hr L70 rated life, 70w (Vly) oemB	1
Rf#-2 Rm - Pole 3	LPS 1L SB sports pole secruity 2-3/8, LPS 180w, HID ballast 480w	1	NL070/p/s - New LED area light, pole or bldg. mount, 50,000-Hr L70 rated life, 70w (Vly) oemB	1
Rf#-3 Rm - Pole 4	LPS 1L SB sports pole secruity 2-3/8, LPS 180w, HID ballast 480w	1	NL070/p/s - New LED area light, pole or bldg. mount, 50,000-Hr L70 rated life, 70w (Vly) oemB	1
Rf#-4 Rm - Pole 5	LPS 1L SB sports pole secruity 2-3/8, LPS 180w, HID ballast 480w	1	NL070/p/s - New LED area light, pole or bldg. mount, 50,000-Hr L70 rated life, 70w (Vly) oemB	1
Rf#-5 Rm - Pole 7	LPS 1L SB sports pole secruity 2-3/8, LPS 180w, HID ballast 480w	1	NL070/p/s - New LED area light, pole or bldg. mount, 50,000-Hr L70 rated life, 70w (Vly) oemB	1
Building/Area: New Building				
1st Floor				
Rf#-14 Rm - All Interior Space	DND (do not do, left as is), LED ?w, n/a		DND - DND: (do not do, fixtures left as is)	0
Building/Area: Park Area				
1st Floor				
Rf#-10 Rm - batting cage	LED 1L flood, LED ?w, n/a	8	DND - DND: (do not do, fixtures left as is)	8
Rf#-11 Rm - Flag	MH 1L flood, knuckle, MH 150W, HID ballast	1	NL070/p/s - New LED area light, pole or bldg. mount, 50,000-Hr L70 rated life, 70w (Vly) oemB	1
Rf#-12 Rm - Tennis Parking	LPS 1L SB SqP BZ, LPS 180W, HID ballast	2	NL070/p/s - New LED area light, pole or bldg. mount, 50,000-Hr L70 rated life, 70w (Vly) oemB	2
Rf#-13 Rm - Main Parking	LPS 1L SB SqP BZ, LPS 180W, HID ballast	4	NL070/p/s - New LED area light, pole or bldg. mount, 50,000-Hr L70 rated life, 70w (Vly) oemB	4
Building/Area: RR Bldg				
1st Floor				
Rf#-6 Rm - MRR	LPS 1L wm wall pack FT, LPS 55w, HID ballast	2	NL028/wp/ft - New LED wall pack (FT), 50,000-Hr L70 rated life, 28w (MAX)	2
Rf#-7 Rm - WRR	LPS 1L wm wall pack FT, LPS 55w, HID ballast	2	NL028/wp/ft - New LED wall pack (FT), 50,000-Hr L70 rated life, 28w (MAX)	2
Rf#-8 Rm - Plumbing Chase	1x8x 1L sm strip, F96T8 59w, electronic ballast	1	NL055/8s - New 8' LED surface mount narrow wrap, 50,000-Hr L70 rated life, 55w, 4000K (ALE)	1
Rf#-9 Rm - NE Parking	LPS 1L SB SqP BZ, LPS 180W, HID ballast	2	NL070/p/s - New LED area light, pole or bldg. mount, 50,000-Hr L70 rated life, 70w (Vly) oemB	2
Qty for Mountain View Park :		**27**		**27**

Oak Hill Activity Center -

PRE-RETROFIT			POST RETROFIT	
Location	Existing Fixture Description	Qty	Retrofit Code Description (Ltg Control in RED)	Qty
Building/Area: Main				
1st Floor				
Rf#-1 Rm - Main	1x4x 3L pm fxt, F32T8 32w, electronic ballast	21	RLT843dw - (3) 4' LED T8 lamp 10.5w, Type B, direct wire, 50,000-Hr L70 rated life, remove existing ballast from service	21
Rf#-2 Rm - Main	CF 2L rec can 10", CFP-26w, CF ballast	6	RL011/ckit/8t10 - (1) LED 8" rec can kit, 4000K, 11w, 120/277, 50,000-Hr L70 rated life, (1) 10" trim ring extender	6
Rf#-3 Rm - MRR	CF 2L rec can 10", CFP-26w, CF ballast	5	RL011/ckit/8t10 - (1) LED 8" rec can kit, 4000K, 11w, 120/277, 50,000-Hr L70 rated life, (1) 10" trim ring extender	5
Rf#-4 Rm - MRR	1x2x 2L sm wp, F17T8 17w, electronic ballast	2	RLT822dw - (2) 2' LED T8 lamp 7w, Type B, direct wire, 50,000-Hr L70 rated life, remove existing ballast from service	2
Rf#-5 Rm - WRR	CF 2L rec can 10", CFP-26w, CF ballast	5	RL011/ckit/8t10 - (1) LED 8" rec can kit, 4000K, 11w, 120/277, 50,000-Hr L70 rated life, (1) 10" trim ring extender	5
Rf#-6 Rm - WRR	1x2x 2L sm wp, F17T8 17w, electronic ballast	2	RLT822dw - (2) 2' LED T8 lamp 7w, Type B, direct wire, 50,000-Hr L70 rated life, remove existing ballast from service	2
Rf#-7 Rm - Utility	1x4x 2L sm wp, F32T8 32w, electronic ballast	1	RLT842dw - (2) 4' LED T8 lamp 10.5w, Type B, direct wire, 50,000-Hr L70 rated life, remove existing ballast from service	1
Rf#-8 Rm - Office	1x4x 3L pm fxt, F32T8 32w, electronic ballast	1	RLT843dw - (3) 4' LED T8 lamp 10.5w, Type B, direct wire, 50,000-Hr L70 rated life, remove existing ballast from service	1
Rf#-9 Rm - Storage	1x4x 2L sm wp, F32T8 32w, electronic ballast	1	RLT842dw - (2) 4' LED T8 lamp 10.5w, Type B, direct wire, 50,000-Hr L70 rated life, remove existing ballast from service	1
Rf#-10 Rm - Ext - Wall Mount	LED 1L wm wall pack, LED, n/a	2	DND - DND: (do not do, fixtures left as is)	2
Rf#-11 Rm - Ext - Wall Mount	CF 2L wm wall dome, CFP-32w, CF ballast	6	RL012/fkit - (1) LED 3"x6" module 12w, 120/277, 50,000-Hr L70 rated life, remove ballast from service	6
	Qty for Oak Hill Activity Center :	**52**		**52**

Park Avenue Community Center ("PACC") / Veterans Center -

PRE-RETROFIT			POST RETROFIT	
Location	Existing Fixture Description	Qty	Retrofit Code Description (Ltg Control in RED)	Qty
Building/Area: Gazebo				
1st Floor				
Rf#-20 Rm - Ext - Ceiling Mount	1x4x 2L sm vapor tight, F32T8 32w, electronic ballast	6	RLT842dw - (2) 4' LED T8 lamp 10.5w, Type B, direct wire, 50,000-Hr L70 rated life, remove existing ballast from service	6
Building/Area: Main Building				
1st Floor				
Rf#-1 Rm - Main Entry lobby /area	CF and LED 1L rec can, CFS-23w, CF ballast	22	RL011/ckit/6 - (1) LED 6" rec can kit, 4000K, 11w, 120/277, 50,000-Hr L70 rated life	22
Rf#-2 Rm - M RR	CF and LED 1L rec can, CFS-23w, CF ballast	5	RL011/ckit/6 - (1) LED 6" rec can kit, 4000K, 11w, 120/277, 50,000-Hr L70 rated life	5
Rf#-3 Rm - W RR	CF and LED 1L rec can, CFS-23w, CF ballast	5	RL011/ckit/6 - (1) LED 6" rec can kit, 4000K, 11w, 120/277, 50,000-Hr L70 rated life	5
Rf#-4 Rm - Storage Rm left of above	CF and LED 1L rec can, CFS-23w, CF ballast	2	RL011/ckit/6 - (1) LED 6" rec can kit, 4000K, 11w, 120/277, 50,000-Hr L70 rated life	2
Rf#-5 Rm - Storage Rm right of Cedar Rm	CF and LED 1L rec can, CFS-23w, CF ballast	2	RL011/ckit/6 - (1) LED 6" rec can kit, 4000K, 11w, 120/277, 50,000-Hr L70 rated life	2
Rf#-6 Rm - RA Rm left of Cedar Rm	1x4x 1L fxt, F32T8 32w, electronic ballast	1	RLT841dw - (1) 4' LED T8 lamp 10.5w, Type B, direct wire, 50,000-Hr L70 rated life, remove existing ballast from service	1
Rf#-7 Rm - Auditorium	CF and LED 1L rec can 6", CFS-23w, CF ballast	8	RL011/ckit/6 - (1) LED 6" rec can kit, 4000K, 11w, 120/277, 50,000-Hr L70 rated life	8
Rf#-8 Rm - Auditorium	CF and LED 1L rec can 8", CFS-23w, CF ballast	28	RL011/ckit/6t8 - (1) LED 6" rec can kit, 4000K, 11w, 120/277, 50,000-Hr L70 rated life, (1) 8" trim ring extender	28
Rf#-9 Rm - Kitchen	CF and LED 1L rec can 6", CFS-23w, CF ballast	4	RL011/ckit/6 - (1) LED 6" rec can kit, 4000K, 11w, 120/277, 50,000-Hr L70 rated life	4
Rf#-10 Rm - Kitchen	CF and LED 1L rec can 6", CFS-23w, CF ballast	2	RL011/ckit/6 - (1) LED 6" rec can kit, 4000K, 11w, 120/277, 50,000-Hr L70 rated life	2
Rf#-11 Rm - All other Interior Space	DND (do not do, left as is), LED ?w, n/a		DND - DND: (do not do, fixtures left as is)	0
Rf#-12 Rm - Ext - Wall Mount	CF 1L wm wall pack small, CFP-26w, CF ballast	4	NL012/wp/rb - New LED wall pack full, 50,000-Hr L70 rated life, 12w, built in 120/277v photo cell (Rb)	4
Rf#-13 Rm - Ext - Wall Mount	CF 2L wm wall pack small, CFP-26w, CF ballast	2	NL012/wp/rb - New LED wall pack full, 50,000-Hr L70 rated life, 12w, built in 120/277v photo cell (Rb)	2
Rf#-14 Rm - Ext - Wall Mount	MH 1L wm wall pack large, MH 150W, HID ballast	1	NL028/wp/ft - New LED wall pack (FT), 50,000-Hr L70 rated life, 28w (MAX)	1
Rf#-15 Rm - Ext - Wall Mount	LED 1L wm wall pack small, LED, n/a		DND - DND: (do not do, fixtures left as is)	0
Rf#-16 Rm - Ext - Wall Mount	LED 1L flood, trunion, LED, n/a	3	DND - DND: (do not do, fixtures left as is)	3
Rf#-17 Rm - Ext - Pole Mount	MH 1L cobra head, MH 400w, HID ballast	1	NL080/p/cbr - New LED area light, pole or bldg. mount, 50,000-Hr L70 rated life, 80w (Vly)	1
Rf#-18 Rm - Ext - Pole Mount	LED 1L cobra head, LED , n/a	5	DND - DND: (do not do, fixtures left as is)	5
Rf#-19 Rm - Ext - Pole Mount	LED 1L area light small, LED, n/a	2	DND - DND: (do not do, fixtures left as is)	2
Building/Area: Nutrition Center				
1st Floor				
Rf#-21 Rm - Main Hallways	CF and LED 2L wm sconce, CFS-23w R40, CF ballast	8	RL092/s/R40 - (2) LED 8w R40 screw in lamp, 4000K	8
Rf#-22 Rm - Main Hallways	CF and LED 1L rec can, CFS-23w, CF ballast	4	RL011/ckit/6 - (1) LED 6" rec can kit, 4000K, 11w, 120/277, 50,000-Hr L70 rated life	4
Rf#-23 Rm - Main Hallways	CF and LED 1L rec can, CFS-23w, CF ballast	3	RL011/ckit/6 - (1) LED 6" rec can kit, 4000K, 11w, 120/277, 50,000-Hr L70 rated life	3
Rf#-24 Rm - Main Hallways	CF and LED 1L rec can, CFS-23w, CF ballast	3	RL011/ckit/6 - (1) LED 6" rec can kit, 4000K, 11w, 120/277, 50,000-Hr L70 rated life	3
Rf#-25 Rm - All other Interior Space	DND (do not do, left as is), LED ?w, n/a		DND - DND: (do not do, fixtures left as is)	0
Building/Area: Oak Rm Bldg				
1st Floor				
Rf#-26 Rm - Main Lobby	CF 2L rec can, CFS-23w, CF ballast	8	RL011/ckit/6 - (1) LED 6" rec can kit, 4000K, 11w, 120/277, 50,000-Hr L70 rated life	8

Park Avenue Community Center ("PACC") / Veterans Center -

PRE-RETROFIT			POST RETROFIT	
Location	Existing Fixture Description	Qty	Retrofit Code Description (Ltg Control in RED)	Qty
Rf#-27 Rm - B RR	CF 2L rec can, CFS-23w, CF ballast	7	RL011/ckit/6 - (1) LED 6" rec can kit, 4000K, 11w, 120/277, 50,000-Hr L70 rated life	7
Rf#-28 Rm - B RR	CF 2L rec can emr, CFS-23w, CF ballast	1	RL011/ckit/6e - (1) LED 6" rec can kit, 4000K, 11w, 120/277, 50,000-Hr L70 rated life	1
Rf#-29 Rm - G RR	CF 2L rec can, CFS-23w, CF ballast	7	RL011/ckit/6 - (1) LED 6" rec can kit, 4000K, 11w, 120/277, 50,000-Hr L70 rated life	7
Rf#-30 Rm - G RR	CF 2L rec can emr, CFS-23w, CF ballast	1	RL011/ckit/6e - (1) LED 6" rec can kit, 4000K, 11w, 120/277, 50,000-Hr L70 rated life	1
Rf#-31 Rm - All other Interior Space	DND (do not do, left as is), LED ?w, n/a		DND - DND: (do not do, fixtures left as is)	0
venue Community Center ("PACC") / Veterans Center :		**145**		**145**

Police and Fire Headquarters ("PAFH") -

PRE-RETROFIT			POST RETROFIT	
Location	Existing Fixture Description	Qty	Retrofit Code Description (Ltg Control in RED)	Qty
Building/Area: Main				
1st Floor				
Rf#-1 Rm - Lobby	CF 2L rec can 10", CFP-26w, CF ballast	11	RL011/ckit/8t10e - (1) LED 8" rec can kit, 4000K, 11w, 120/277, 50,000-Hr L70 rated life, (1) 10" trim ring extender	11
Rf#-2 Rm - Lobby	LED 2L rec can 10", LED , n/a	2	RL011/ckit/8t10e - (1) LED 8" rec can kit, 4000K, 11w, 120/277, 50,000-Hr L70 rated life, (1) 10" trim ring extender	2
Rf#-3 Rm - Lobby	LED 4L pm fxt, LED A19, n/a	2	DND - DND: (do not do, fixtures left as is)	2
Rf#-4 Rm - Lobby	CF 4L pm deco fxt, CFS-26w, CF ballast	1	RL094/s - (4) LED 8.5w A19 screw in lamp, 4000K	1
Rf#-5 Rm - MRR	CF 2L rec can 8", CFP-26w, CF ballast	1	RL011/ckit/6t8 - (1) LED 6" rec can kit, 4000K, 11w, 120/277, 50,000-Hr L70 rated life, (1) 8" trim ring extender	1
Rf#-6 Rm - MRR	1x4 1L Strip, F32T8 32w, electronic ballast	2	RLT841dw - (1) 4' LED T8 lamp 10.5w, Type B, direct wire, 50,000-Hr L70 rated life, remove existing ballast from service	2
Rf#-7 Rm - WRR	CF 2L rec can 8", CFP-26w, CF ballast	1	RL011/ckit/6t8 - (1) LED 6" rec can kit, 4000K, 11w, 120/277, 50,000-Hr L70 rated life, (1) 8" trim ring extender	1
Rf#-8 Rm - WRR	1x4 1L Strip, F32T8 32w, electronic ballast	2	RLT841dw - (1) 4' LED T8 lamp 10.5w, Type B, direct wire, 50,000-Hr L70 rated life, remove existing ballast from service	2
Rf#-9 Rm - Reception	CF 2L rec can 10", CFP-26w, CF ballast	28	RL011/ckit/8t10 - (1) LED 8" rec can kit, 4000K, 11w, 120/277, 50,000-Hr L70 rated life, (1) 10" trim ring extender	28
Rf#-10 Rm - Reception	LED 2L rec can 10", LED , n/a	4	RL011/ckit/8t10 - (1) LED 8" rec can kit, 4000K, 11w, 120/277, 50,000-Hr L70 rated life, (1) 10" trim ring extender	4
Rf#-11 Rm - Reception	LED 4L pm fxt, LED A19, n/a	2	DND - DND: (do not do, fixtures left as is)	2
Rf#-12 Rm - Hall	2x4x 2L rec trf, F32T8 32w, electronic ballast	3	RLT842dw - (2) 4' LED T8 lamp 10.5w, Type B, direct wire, 50,000-Hr L70 rated life, remove existing ballast from service	3
Rf#-13 Rm - 109 Comm Meet	2x2x 2L rec trf, LED, n/a	3	RLT822Udw - (2) 2' LED T8 "U" lamp 15w, Type B, direct wire, 50,000-Hr L70 rated life, remove existing ballast from service (SYL)	3
Rf#-14 Rm - 109 Comm Meet	2x2x 2L rec trf, FB31T8 32w U6, electronic ballast	17	RLT822Udwe - (2) 2' LED T8 "U" lamp 15w, Type B, direct wire, 50,000-Hr L70 rated life, remove existing ballast from service (SYL)	17
Rf#-15 Rm - 109 Comm Meet	LED 2L rec can 10", LED, n/a	2	RL011/ckit/8t10 - (1) LED 8" rec can kit, 4000K, 11w, 120/277, 50,000-Hr L70 rated life, (1) 10" trim ring extender	2
Rf#-16 Rm - 109 Comm Meet	CF 2L rec can 10", CFP-26w, CF ballast	18	RL011/ckit/8t10e - (1) LED 8" rec can kit, 4000K, 11w, 120/277, 50,000-Hr L70 rated life, (1) 10" trim ring extender	18
Rf#-17 Rm - 109 Comm Meet	LED 2L rec can 6", LED, n/a	1	RL011/ckit/6 - (1) LED 6" rec can kit, 4000K, 11w, 120/277, 50,000-Hr L70 rated life	1
Rf#-18 Rm - 109 Comm Meet	CF 2L rec can 6", CFP-26w, CF ballast	3	RL011/ckit/6 - (1) LED 6" rec can kit, 4000K, 11w, 120/277, 50,000-Hr L70 rated life	3
Rf#-19 Rm - 105 Custodian	1x4x 2L sm ind hood, F32T8 32w, electronic ballast	3	RLT842dw - (2) 4' LED T8 lamp 10.5w, Type B, direct wire, 50,000-Hr L70 rated life, remove existing ballast from service	3
Rf#-20 Rm - 108	1x4x 2L rec trf, F32T8 32w, electronic ballast	1	RLT842dw - (2) 4' LED T8 lamp 10.5w, Type B, direct wire, 50,000-Hr L70 rated life, remove existing ballast from service	1
Rf#-21 Rm - 194 Lobby	CF 2L rec can 6", CFP-26w, CF ballast	3	RL011/ckit/6 - (1) LED 6" rec can kit, 4000K, 11w, 120/277, 50,000-Hr L70 rated life	3
Rf#-22 Rm - Records Lobby	CF 2L rec can 6", CFP-26w, CF ballast	1	RL011/ckit/6 - (1) LED 6" rec can kit, 4000K, 11w, 120/277, 50,000-Hr L70 rated life	1
Rf#-23 Rm - Records Lobby	LED 2L rec can 6", LED, n/a	1	RL011/ckit/6 - (1) LED 6" rec can kit, 4000K, 11w, 120/277, 50,000-Hr L70 rated life	1
Rf#-24 Rm - Records	CF 2L rec can 6", CFP-26w, CF ballast	5	RL011/ckit/6 - (1) LED 6" rec can kit, 4000K, 11w, 120/277, 50,000-Hr L70 rated life	5
Rf#-25 Rm - Records	LED 2L rec can 6", LED, n/a	5	RL011/ckit/6 - (1) LED 6" rec can kit, 4000K, 11w, 120/277, 50,000-Hr L70 rated life	5
Rf#-26 Rm - Atrium	CF 2L rec can 6", CFP-26w, CF ballast	10	RL011/ckit/6e - (1) LED 6" rec can kit, 4000K, 11w, 120/277, 50,000-Hr L70 rated life	10
Rf#-27 Rm - Atrium	LED 2L rec can 6", LED, n/a	4	RL011/ckit/6 - (1) LED 6" rec can kit, 4000K, 11w, 120/277, 50,000-Hr L70 rated life	4
Rf#-28 Rm - Main Hall	1x4x 2L wm wall wash, F32T8 32w, electronic ballast	4	RLT842dwe - (2) 4' LED T8 lamp 10.5w, Type B, direct wire, 50,000-Hr L70 rated life, remove existing ballast from service	4
Rf#-29 Rm - Hall @ 151	1x4x 2L pm fxt, F32T8 32w, electronic ballast	15	RLT842dwe - (2) 4' LED T8 lamp 10.5w, Type B, direct wire, 50,000-Hr L70 rated life, remove existing ballast from service	15
Rf#-30 Rm - Hall @ 134 & 172	CF 2L rec can 6", CFP-26w, CF ballast	5	RL011/ckit/6 - (1) LED 6" rec can kit, 4000K, 11w, 120/277, 50,000-Hr L70 rated life	5

Police and Fire Headquarters ("PAFH") -

PRE-RETROFIT			POST RETROFIT	
Location	Existing Fixture Description	Qty	Retrofit Code Description (Ltg Control in RED)	Qty
Rf#-31 Rm - Hall @ 134 & 172	LED 2L rec can 6", LED, n/a	2	RL011/ckit/6 - (1) LED 6" rec can kit, 4000K, 11w, 120/277, 50,000-Hr L70 rated life	2
Rf#-32 Rm - 169	1x4x 2L pm fxt, F32T8 32w, electronic ballast	3	RLT842dwe - (2) 4' LED T8 lamp 10.5w, Type B, direct wire, 50,000-Hr L70 rated life, remove existing ballast from service	3
Rf#-33 Rm - 155	1x4x 2L pm fxt, F32T8 32w, electronic ballast	4	RLT842dwe - (2) 4' LED T8 lamp 10.5w, Type B, direct wire, 50,000-Hr L70 rated life, remove existing ballast from service	4
Rf#-34 Rm - 121	1x4x 2L pm fxt, F32T8 32w, electronic ballast	5	RLT842dwe - (2) 4' LED T8 lamp 10.5w, Type B, direct wire, 50,000-Hr L70 rated life, remove existing ballast from service	5
Rf#-35 Rm - MRR @ 172	CF 2L rec can 6", CFP-26w, CF ballast	3	RL011/ckit/6e - (1) LED 6" rec can kit, 4000K, 11w, 120/277, 50,000-Hr L70 rated life	3
Rf#-36 Rm - WRR	CF 2L rec can 6", CFP-26w, CF ballast	3	RL011/ckit/6 - (1) LED 6" rec can kit, 4000K, 11w, 120/277, 50,000-Hr L70 rated life	3
Rf#-37 Rm - Hall @ 40	CF 2L rec can 6", CFP-26w, CF ballast	3	RL011/ckit/6e - (1) LED 6" rec can kit, 4000K, 11w, 120/277, 50,000-Hr L70 rated life	3
Rf#-38 Rm - Hall @ 40	LED 2L rec can 6", LED, n/a	5	RL011/ckit/6 - (1) LED 6" rec can kit, 4000K, 11w, 120/277, 50,000-Hr L70 rated life	5
Rf#-39 Rm - 14	LED 2L rec can 6", LED, n/a	2	RL011/ckit/6 - (1) LED 6" rec can kit, 4000K, 11w, 120/277, 50,000-Hr L70 rated life	2
Rf#-40 Rm - 135	CF 2L rec can 6", CFP-26w, CF ballast	13	RL011/ckit/6e - (1) LED 6" rec can kit, 4000K, 11w, 120/277, 50,000-Hr L70 rated life	13
Rf#-41 Rm - 135	LED 2L rec can 6", LED, n/a	5	RL011/ckit/6 - (1) LED 6" rec can kit, 4000K, 11w, 120/277, 50,000-Hr L70 rated life	5
Rf#-42 Rm - Ext - Ceiling Mount	CF 2L rec can 6", CFP-26w, CF ballast	13	RL011/ckit/6e - (1) LED 6" rec can kit, 4000K, 11w, 120/277, 50,000-Hr L70 rated life	13
2nd Floor				
Rf#-52 Rm - Hall @ 241	LED 2L rec can 10", LED, n/a	9	RL011/ckit/8t10 - (1) LED 8" rec can kit, 4000K, 11w, 120/277, 50,000-Hr L70 rated life, (1) 10" trim ring extender	9
Rf#-53 Rm - Hall @ 241	CF 2L rec can 6", CFP-26w, CF ballast	2	RL011/ckit/6 - (1) LED 6" rec can kit, 4000K, 11w, 120/277, 50,000-Hr L70 rated life	2
Rf#-54 Rm - Hall @ 241	LED 2L rec can 6", LED, n/a	7	RL011/ckit/6 - (1) LED 6" rec can kit, 4000K, 11w, 120/277, 50,000-Hr L70 rated life	7
Rf#-55 Rm - Hall @ 241	CF 2L rec can 6", CFP-26w, CF ballast	7	RL011/ckit/6 - (1) LED 6" rec can kit, 4000K, 11w, 120/277, 50,000-Hr L70 rated life	7
Rf#-56 Rm - Atrium	LED 2L rec can 6", LED, n/a	1	RL011/ckit/6 - (1) LED 6" rec can kit, 4000K, 11w, 120/277, 50,000-Hr L70 rated life	1
Rf#-57 Rm - Atrium	CF 2L rec can 6", CFP-26w, CF ballast	14	RL011/ckit/6 - (1) LED 6" rec can kit, 4000K, 11w, 120/277, 50,000-Hr L70 rated life	14
Rf#-58 Rm - Hall @ 216	LED 2L rec can 6", LED, n/a	4	RL011/ckit/6 - (1) LED 6" rec can kit, 4000K, 11w, 120/277, 50,000-Hr L70 rated life	4
Rf#-59 Rm - Hall @ 216	CF 2L rec can 6", CFP-26w, CF ballast	6	RL011/ckit/6 - (1) LED 6" rec can kit, 4000K, 11w, 120/277, 50,000-Hr L70 rated life	6
Rf#-60 Rm - Locker 231	LED 2L rec can 6", LED, n/a	2	RL011/ckit/6 - (1) LED 6" rec can kit, 4000K, 11w, 120/277, 50,000-Hr L70 rated life	2
Rf#-61 Rm - Locker 231	CF 2L rec can 6", CFP-26w, CF ballast	9	RL011/ckit/6 - (1) LED 6" rec can kit, 4000K, 11w, 120/277, 50,000-Hr L70 rated life	9
Rf#-62 Rm - 231C Rest & Recover	CF 2L rec can 10", CFP-26w, CF ballast	1	RL011/ckit/8t10bt - (1) LED 8" rec can kit, 4000K, 11w, 120/277, 50,000-Hr L70 rated life, (1) 10" trim ring extender L-DS	1
Rf#-63 Rm - 231D Rest & Recover	CF 2L rec can 10", CFP-26w, CF ballast	1	RL011/ckit/8t10bt - (1) LED 8" rec can kit, 4000K, 11w, 120/277, 50,000-Hr L70 rated life, (1) 10" trim ring extender L-DS	1
Rf#-64 Rm - Locker 226	LED 2L rec can 6", LED, n/a	2	RL011/ckit/6 - (1) LED 6" rec can kit, 4000K, 11w, 120/277, 50,000-Hr L70 rated life	2
Rf#-65 Rm - Locker 226	CF 2L rec can 6", CFP-26w, CF ballast	4	RL011/ckit/6 - (1) LED 6" rec can kit, 4000K, 11w, 120/277, 50,000-Hr L70 rated life	4
Rf#-66 Rm - 226C Rest & Recover	CF 2L rec can 10", CFP-26w, CF ballast	1	RL011/ckit/8t10bt - (1) LED 8" rec can kit, 4000K, 11w, 120/277, 50,000-Hr L70 rated life, (1) 10" trim ring extender L-DS	1
Rf#-67 Rm - 226D Rest & Recover	CF 2L rec can 10", CFP-26w, CF ballast	1	RL011/ckit/8t10bt - (1) LED 8" rec can kit, 4000K, 11w, 120/277, 50,000-Hr L70 rated life, (1) 10" trim ring extender L-DS	1
Rf#-68 Rm - Hall @ 223	LED 2L rec can 6", LED, n/a	7	RL011/ckit/6 - (1) LED 6" rec can kit, 4000K, 11w, 120/277, 50,000-Hr L70 rated life	7
Rf#-69 Rm - Hall @ 223	CF 2L rec can 6", CFP-26w, CF ballast	10	RL011/ckit/6 - (1) LED 6" rec can kit, 4000K, 11w, 120/277, 50,000-Hr L70 rated life	10
Rf#-70 Rm - MRR	CF 2L rec can 6", CFP-26w, CF ballast	2	RL011/ckit/6 - (1) LED 6" rec can kit, 4000K, 11w, 120/277, 50,000-Hr L70 rated life	2

Police and Fire Headquarters ("PAFH") -

PRE-RETROFIT			POST RETROFIT	
Location	Existing Fixture Description	Qty	Retrofit Code Description (Ltg Control in RED)	Qty
Rf#-71 Rm - WRR	CF 2L rec can 6", CFP-26w, CF ballast	2	RL011/ckit/6 - (1) LED 6" rec can kit, 4000K, 11w, 120/277, 50,000-Hr L70 rated life	2
Rf#-72 Rm - 223	CF 2L rec can 6", CFP-26w, CF ballast	3	RL011/ckit/6 - (1) LED 6" rec can kit, 4000K, 11w, 120/277, 50,000-Hr L70 rated life	3
Rf#-73 Rm - 223A	CF 2L rec can 6", CFP-26w, CF ballast	3	RL011/ckit/6 - (1) LED 6" rec can kit, 4000K, 11w, 120/277, 50,000-Hr L70 rated life	3
Rf#-74 Rm - Lobby @ 205	LED 2L rec can 6", LED, n/a	6	RL011/ckit/6 - (1) LED 6" rec can kit, 4000K, 11w, 120/277, 50,000-Hr L70 rated life	6
Rf#-75 Rm - Lobby @ 205	CF 2L rec can 6", CFP-26w, CF ballast	6	RL011/ckit/6 - (1) LED 6" rec can kit, 4000K, 11w, 120/277, 50,000-Hr L70 rated life	6
Rf#-76 Rm - WRR	CF 2L rec can 6", CFP-26w, CF ballast	1	RL011/ckit/6 - (1) LED 6" rec can kit, 4000K, 11w, 120/277, 50,000-Hr L70 rated life	1
Rf#-77 Rm - MRR	CF 2L rec can 6", CFP-26w, CF ballast	1	RL011/ckit/6 - (1) LED 6" rec can kit, 4000K, 11w, 120/277, 50,000-Hr L70 rated life	1
Rf#-78 Rm - 205 Chief Conf	CF 2L rec can 10", CFP-26w, CF ballast	10	RL011/ckit/8t10 - (1) LED 8" rec can kit, 4000K, 11w, 120/277, 50,000-Hr L70 rated life, (1) 10" trim ring extender	10
Rf#-79 Rm - 205 Chief Conf	LED 2L rec can 10", LED, n/a	6	RL011/ckit/8t10 - (1) LED 8" rec can kit, 4000K, 11w, 120/277, 50,000-Hr L70 rated life, (1) 10" trim ring extender	6
Rf#-80 Rm - 205 Chief Conf	2x2x 2L rec trf, FB31T8 32w U6, electronic ballast	12	RLT822Udw - (2) 2' LED T8 "U" lamp 15w, Type B, direct wire, 50,000-Hr L70 rated life, remove existing ballast from service (SYL)	12
Rf#-81 Rm - 295	CF 2L rec can 6", CFP-26w, CF ballast	1	RL011/ckit/6 - (1) LED 6" rec can kit, 4000K, 11w, 120/277, 50,000-Hr L70 rated life	1
Rf#-82 Rm - 296	CF 2L rec can 6", CFP-26w, CF ballast	4	RL011/ckit/6 - (1) LED 6" rec can kit, 4000K, 11w, 120/277, 50,000-Hr L70 rated life	4
Rf#-83 Rm - 296 RR	CF 2L rec can 6", CFP-26w, CF ballast	4	RL011/ckit/6 - (1) LED 6" rec can kit, 4000K, 11w, 120/277, 50,000-Hr L70 rated life	4
Rf#-84 Rm - Hall @ 289	LED 2L rec can 10", LED, n/a	2	RL011/ckit/8t10 - (1) LED 8" rec can kit, 4000K, 11w, 120/277, 50,000-Hr L70 rated life, (1) 10" trim ring extender	2
Rf#-85 Rm - Hall @ 259	CF 2L rec can 6", CFP-26w, CF ballast	6	RL011/ckit/6 - (1) LED 6" rec can kit, 4000K, 11w, 120/277, 50,000-Hr L70 rated life	6
Rf#-86 Rm - Hall @ 259	LED 2L rec can 6", LED, n/a	4	RL011/ckit/6 - (1) LED 6" rec can kit, 4000K, 11w, 120/277, 50,000-Hr L70 rated life	4
Rf#-87 Rm - 234	CF 2L rec can 10", CFP-26w, CF ballast	9	RL011/ckit/8t10 - (1) LED 8" rec can kit, 4000K, 11w, 120/277, 50,000-Hr L70 rated life, (1) 10" trim ring extender	9
Rf#-88 Rm - 234	LED 2L rec can 10", LED, n/a	1	RL011/ckit/8t10 - (1) LED 8" rec can kit, 4000K, 11w, 120/277, 50,000-Hr L70 rated life, (1) 10" trim ring extender	1
Rf#-89 Rm - 249	1x4x 2L pm fxt, F32T8 32w, electronic ballast	6	RLT842dwe - (2) 4' LED T8 lamp 10.5w, Type B, direct wire, 50,000-Hr L70 rated life, remove existing ballast from service	6
Rf#-90 Rm - Main Hall	1x4x 2L pm fxt, F32T8 32w, electronic ballast	10	RLT842dwe - (2) 4' LED T8 lamp 10.5w, Type B, direct wire, 50,000-Hr L70 rated life, remove existing ballast from service	10
3rd Floor				
Rf#-91 Rm - Atrium	CF 2L rec can 6", CFP-26w, CF ballast	7	RL011/ckit/6 - (1) LED 6" rec can kit, 4000K, 11w, 120/277, 50,000-Hr L70 rated life	7
Rf#-92 Rm - Atrium	LED 2L rec can 6", LED, n/a	4	RL011/ckit/6 - (1) LED 6" rec can kit, 4000K, 11w, 120/277, 50,000-Hr L70 rated life	4
Rf#-93 Rm - Atrium (tower flood)	MH 1L flood, CMH 300W, HID ballast	8	NL070/p/s - New LED area light, pole or bldg. mount, 50,000-Hr L70 rated life, 70w (Vly) oemB	8
Rf#-94 Rm - 319 Locker	CF 2L rec can 6", CFP-26w, CF ballast	8	RL011/ckit/6 - (1) LED 6" rec can kit, 4000K, 11w, 120/277, 50,000-Hr L70 rated life	8
Rf#-95 Rm - 319 Locker	LED 2L rec can 6", LED, n/a	1	RL011/ckit/6 - (1) LED 6" rec can kit, 4000K, 11w, 120/277, 50,000-Hr L70 rated life	1
Rf#-96 Rm - Hall @ 310	CF 2L rec can 6", CFP-26w, CF ballast	2	RL011/ckit/6 - (1) LED 6" rec can kit, 4000K, 11w, 120/277, 50,000-Hr L70 rated life	2
Rf#-97 Rm - Hall @ 310	LED 2L rec can 6", LED, n/a	4	RL011/ckit/6 - (1) LED 6" rec can kit, 4000K, 11w, 120/277, 50,000-Hr L70 rated life	4
Rf#-98 Rm - 318 Locker	CF 2L rec can 6", CFP-26w, CF ballast	9	RL011/ckit/6 - (1) LED 6" rec can kit, 4000K, 11w, 120/277, 50,000-Hr L70 rated life	9
Rf#-99 Rm - Hall @ 323	CF 2L rec can 6", CFP-26w, CF ballast	12	RL011/ckit/6 - (1) LED 6" rec can kit, 4000K, 11w, 120/277, 50,000-Hr L70 rated life	12
Rf#-100 Rm - Hall @ 323	LED 2L rec can 6", LED, n/a	9	RL011/ckit/6 - (1) LED 6" rec can kit, 4000K, 11w, 120/277, 50,000-Hr L70 rated life	9
Rf#-101 Rm - 309	CF 2L rec can 6", CFP-26w, CF ballast	6	RL011/ckit/6 - (1) LED 6" rec can kit, 4000K, 11w, 120/277, 50,000-Hr L70 rated life	6

Police and Fire Headquarters ("PAFH") -

PRE-RETROFIT			POST RETROFIT	
Location	Existing Fixture Description	Qty	Retrofit Code Description (Ltg Control in RED)	Qty
Rf#-102 Rm - 309	LED 2L rec can 6", LED, n/a	2	RL011/ckit/6 - (1) LED 6" rec can kit, 4000K, 11w, 120/277, 50,000-Hr L70 rated life	2
Rf#-103 Rm - 309	1x4x 2L pm fxt, F32T8 32w, electronic ballast	3	RLT842dwe - (2) 4' LED T8 lamp 10.5w, Type B, direct wire, 50,000-Hr L70 rated life, remove existing ballast from service	3
Rf#-104 Rm - 306	CF 2L rec can 6", CFP-26w, CF ballast	5	RL011/ckit/6 - (1) LED 6" rec can kit, 4000K, 11w, 120/277, 50,000-Hr L70 rated life	5
Rf#-105 Rm - Lobby	CF 2L rec can 10", CFP-26w, CF ballast	11	RL011/ckit/8t10 - (1) LED 8" rec can kit, 4000K, 11w, 120/277, 50,000-Hr L70 rated life, (1) 10" trim ring extender	11
Rf#-106 Rm - Lobby	LED 2L rec can 10", LED, n/a	8	RL011/ckit/8t10 - (1) LED 8" rec can kit, 4000K, 11w, 120/277, 50,000-Hr L70 rated life, (1) 10" trim ring extender	8
Rf#-107 Rm - WRR	CF 2L rec can 6", CFP-26w, CF ballast	1	RL011/ckit/6 - (1) LED 6" rec can kit, 4000K, 11w, 120/277, 50,000-Hr L70 rated life	1
Rf#-108 Rm - MRR	CF 2L rec can 6", CFP-26w, CF ballast	1	RL011/ckit/6 - (1) LED 6" rec can kit, 4000K, 11w, 120/277, 50,000-Hr L70 rated life	1
Rf#-109 Rm - 349 Conf	CF 2L rec can 10", CFP-26w, CF ballast	14	RL011/ckit/8t10 - (1) LED 8" rec can kit, 4000K, 11w, 120/277, 50,000-Hr L70 rated life, (1) 10" trim ring extender	14
Rf#-110 Rm - 349 Conf	2x2x 2L rec trf, FB31T8 32w U6, electronic ballast	12	RLT822Udw - (2) 2' LED T8 "U" lamp 15w, Type B, direct wire, 50,000-Hr L70 rated life, remove existing ballast from service (SYL)	12
Rf#-111 Rm - Open Area @ 349	CF 2L rec can 6", CFP-26w, CF ballast	9	RL011/ckit/6 - (1) LED 6" rec can kit, 4000K, 11w, 120/277, 50,000-Hr L70 rated life	9
Rf#-112 Rm - 346	CF 2L rec can 6", CFP-26w, CF ballast	2	RL011/ckit/6 - (1) LED 6" rec can kit, 4000K, 11w, 120/277, 50,000-Hr L70 rated life	2
Rf#-113 Rm - 347	CF 2L rec can 6", CFP-26w, CF ballast	10	RL011/ckit/6 - (1) LED 6" rec can kit, 4000K, 11w, 120/277, 50,000-Hr L70 rated life	10
Rf#-114 Rm - 348	1x4x 2L pm fxt, F32T8 32w, electronic ballast	3	RLT842dwe - (2) 4' LED T8 lamp 10.5w, Type B, direct wire, 50,000-Hr L70 rated life, remove existing ballast from service	3
Rf#-115 Rm - 344	CF 2L rec can 6", CFP-26w, CF ballast	2	RL011/ckit/6 - (1) LED 6" rec can kit, 4000K, 11w, 120/277, 50,000-Hr L70 rated life	2
Rf#-116 Rm - 339	CF 2L rec can 6", CFP-26w, CF ballast	1	RL011/ckit/6 - (1) LED 6" rec can kit, 4000K, 11w, 120/277, 50,000-Hr L70 rated life	1
Rf#-117 Rm - 338	CF 2L rec can 6", CFP-26w, CF ballast	1	RL011/ckit/6 - (1) LED 6" rec can kit, 4000K, 11w, 120/277, 50,000-Hr L70 rated life	1
Rf#-118 Rm - 332	CF 2L rec can 6", CFP-26w, CF ballast	4	RL011/ckit/6 - (1) LED 6" rec can kit, 4000K, 11w, 120/277, 50,000-Hr L70 rated life	4
Rf#-119 Rm - EOC	CF 2L rec can 6", CFP-26w, CF ballast	14	RL011/ckit/6 - (1) LED 6" rec can kit, 4000K, 11w, 120/277, 50,000-Hr L70 rated life	14
Rf#-120 Rm - EOC	1x4x 2L pm fxt, F32T8 32w, electronic ballast	3	RLT842dwe - (2) 4' LED T8 lamp 10.5w, Type B, direct wire, 50,000-Hr L70 rated life, remove existing ballast from service	3

Building/Area: Public Parking

1st Floor

Rf#-43 Rm - Ext - Pole Mount	LED 1L SB SqP black, LED CC, n/a	18	DND - DND: (do not do, fixtures left as is)	18
Rf#-44 Rm - Ext - Pole Mount	MH 1L SB SqP black, MH 250W, HID ballast	4	NL070/p/s - New LED area light, pole or bldg. mount, 50,000-Hr L70 rated life, 70w (Vly) oemB	4
Rf#-45 Rm - Ext - Pole Mount	HPS 1L flood, adj, MH 100W, HID ballast	6	NL040/p/s - New LED area light, pole or bldg. mount, 50,000-Hr L70 rated life, 40w (Vly) oemB	6

Building/Area: Staff Parking

1st Floor

Rf#-46 Rm - Ext - Pole Mount	LED 1L SB SqP black, LED CC, n/a	7	DND - DND: (do not do, fixtures left as is)	7
Rf#-47 Rm - Ext - Pole Mount	MH 1L SB SqP black, MH 250W, HID ballast	1	NL070/p/s - New LED area light, pole or bldg. mount, 50,000-Hr L70 rated life, 70w (Vly) oemB	1
Rf#-48 Rm - Ext - Pole Mount	HPS 1L flood, adj, MH 100W, HID ballast	6	NL040/p/s - New LED area light, pole or bldg. mount, 50,000-Hr L70 rated life, 40w (Vly) oemB	6
Rf#-49 Rm - Ext - Pole Mount	LED 1L SB SqP BZ, LED CC, n/a	4	DND - DND: (do not do, fixtures left as is)	4
Rf#-50 Rm - Ext - Wall Mount	MH 1L wall pack small Hz, MH 100W, HID ballast	3	NL028/wp/ft - New LED wall pack (FT), 50,000-Hr L70 rated life, 28w (MAX)	3
Rf#-51 Rm - Ext - Wall Mount	LED 1L wm wall pack small Hz, LED CC, n/a	12	DND - DND: (do not do, fixtures left as is)	12

Qty for Police and Fire Headquarters ("PAFH") : **645** **645**

W* = wall switch sensor; C* = ceiling sensor; E* = existing sensor, L* Dimming Control

Ranger Station - Dixon Lake -

PRE-RETROFIT			POST RETROFIT	
Location	Existing Fixture Description	Qty	Retrofit Code Description (Ltg Control in RED)	Qty
Building/Area: Camp Area 2-5				
1st Floor				
Rf#-26 Rm - RR Bldg	MV 1L wm wall pack, MV 175W, HID ballast	1	NL028/wp/ft/wg - New LED wall pack (FT), 50,000-Hr L70 rated life, 28w (MAX)	1
Rf#-27 Rm - RR Bldg Chase	1x4x 4L sm wp, F32T8 32w, electronic ballast	2	RLT844dw - (4) 4' LED T8 lamp 10.5w, Type B, direct wire, 50,000-Hr L70 rated life, remove existing ballast from service	2
Building/Area: Camp Area 26-29				
1st Floor				
Rf#-30 Rm - RR Bldg	MV 1L wm wall pack, MV 175W, HID ballast	3	NL028/wp/ft/wg - New LED wall pack (FT), 50,000-Hr L70 rated life, 28w (MAX)	3
Rf#-31 Rm - RR Bldg Chase	1x4x 4L sm wp, F32T8 32w, electronic ballast	1	RLT844dw - (4) 4' LED T8 lamp 10.5w, Type B, direct wire, 50,000-Hr L70 rated life, remove existing ballast from service	1
Building/Area: Camp Area 35-44				
1st Floor				
Rf#-32 Rm - RR Bldg	MV 1L wm wall pack, MV 175W, HID ballast	3	NL028/wp/ft/wg - New LED wall pack (FT), 50,000-Hr L70 rated life, 28w (MAX)	3
Rf#-33 Rm - RR Bldg Chase	1x4x 2L sm wp, F32T8 32w, electronic ballast	1	RLT842dw - (2) 4' LED T8 lamp 10.5w, Type B, direct wire, 50,000-Hr L70 rated life, remove existing ballast from service	1
Building/Area: Camp Area 9-25				
1st Floor				
Rf#-28 Rm - RR Bldg	MV 1L wm wall pack, MV 175W, HID ballast	3	NL028/wp/ft/wg - New LED wall pack (FT), 50,000-Hr L70 rated life, 28w (MAX)	3
Rf#-29 Rm - RR Bldg Chase	1x4x 4L sm wp, F32T8 32w, electronic ballast	1	RLT844dw - (4) 4' LED T8 lamp 10.5w, Type B, direct wire, 50,000-Hr L70 rated life, remove existing ballast from service	1
Building/Area: Gate House				
1st Floor				
Rf#-1 Rm - Ext - Wall Mount	LED 1L wm wall pack, LED, n/a	2	DND - DND: (do not do, fixtures left as is)	2
Building/Area: Hilltop Area				
1st Floor				
Rf#-5 Rm - Ext - Pole Mount	LED 1L post top, LED, n/a	5	DND - DND: (do not do, fixtures left as is)	5
Rf#-6 Rm - RR	MV 1L wm wall pack, MV 175W, HID ballast	3	NL028/wp/ft/wg - New LED wall pack (FT), 50,000-Hr L70 rated life, 28w (MAX)	3
Rf#-7 Rm - Chase	1x4x 2L sm ind hood, F32T8 32w, electronic ballast	1	RLT842dw - (2) 4' LED T8 lamp 10.5w, Type B, direct wire, 50,000-Hr L70 rated life, remove existing ballast from service	1
Rf#-8 Rm - Yuuca Shelter	CF 1L socket E26, CFS-15w, CF ballast	2	RL091/s - (1) LED 8.5w A19 screw in lamp, 4000K	2
Rf#-9 Rm - Poppy Shelter	MV 1L wm wall pack, MV 175W, HID ballast	4	NL028/wp/ft/wg - New LED wall pack (FT), 50,000-Hr L70 rated life, 28w (MAX)	4
Building/Area: Lakeshore Area				
1st Floor				
Rf#-10 Rm - Main	MV 1L wm wall pack, MV 175W, HID ballast	6	NL028/wp/ft/wg - New LED wall pack (FT), 50,000-Hr L70 rated life, 28w (MAX)	6
Rf#-11 Rm - Main	1x4x 2L sm vapor tight, F32T8 32w, electronic ballast	2	RLT842dw - (2) 4' LED T8 lamp 10.5w, Type B, direct wire, 50,000-Hr L70 rated life, remove existing ballast from service	2
Rf#-12 Rm - Electrical	1x4x 2L sm vapor tight, F32T8 32w, electronic ballast	1	RLT842dw - (2) 4' LED T8 lamp 10.5w, Type B, direct wire, 50,000-Hr L70 rated life, remove existing ballast from service	1
Rf#-13 Rm - Fish Cleaning	1x4x 1L fxt, LED, n/a	2	DND - DND: (do not do, fixtures left as is)	2
Rf#-14 Rm - Concession	1x4x 2L rec trf, F32T8 32w, electronic ballast	10	RLT842dw - (2) 4' LED T8 lamp 10.5w, Type B, direct wire, 50,000-Hr L70 rated life, remove existing ballast from service	10
Rf#-15 Rm - Shelter 1	CF 1L socket E26, CFS-15w, CF ballast	2	RL091/s - (1) LED 8.5w A19 screw in lamp, 4000K	2
Rf#-16 Rm - Shelter 2	CF 1L socket E26, CFS-15w, CF ballast	2	RL091/s - (1) LED 8.5w A19 screw in lamp, 4000K	2

Ranger Station - Dixon Lake -

PRE-RETROFIT			POST RETROFIT	
Location	**Existing Fixture Description**	**Qty**	**Retrofit Code Description (Ltg Control in RED)**	**Qty**
Rf#-17 Rm - Shelter 3	CF 1L socket E26, CFS-15w, CF ballast	2	RL091/s - (1) LED 8.5w A19 screw in lamp, 4000K	2
Rf#-18 Rm - Shelter 4	LED 1L wm wall pack, LED CC, n/a	4	DND - DND: (do not do, fixtures left as is)	4
Rf#-19 Rm - Left Dock	MH 1L post top, MH 150W, HID ballast	3	RL0341/s/mg - (1) LED 34w A21 style screw in lamp, 120/277, 50,000-Hr rated life, 5000K, mogul base	3
Rf#-20 Rm - Middle Dock Bldg	LED 1L area lights, LED, n/a	2	DND - DND: (do not do, fixtures left as is)	2
Rf#-21 Rm - Middle Dock Bldg	1x4x 2L sm strip, LED, n/a	2	DND - DND: (do not do, fixtures left as is)	2
Rf#-22 Rm - Middle Dock Bldg	1x4x 2L sm strip, F32T8 32w, electronic ballast	1	RLT842dw - (2) 4' LED T8 lamp 10.5w, Type B, direct wire, 50,000-Hr L70 rated life, remove existing ballast from service	1
Rf#-23 Rm - Beach House	1x4x 4L sm wp, F32T8 32w, electronic ballast	8	RLT844dw - (4) 4' LED T8 lamp 10.5w, Type B, direct wire, 50,000-Hr L70 rated life, remove existing ballast from service	8
Rf#-24 Rm - Beach House	CF 1L Jelly Jar, CFS-42W, CF ballast	5	NL012/wp/rb - New LED wall pack full, 50,000-Hr L70 rated life, 12w, built in 120/277v photo cell (Rb)	5
Rf#-25 Rm - Brick Cabin	DND (do not do, left as is), LED ?w, n/a		DND - DND: (do not do, fixtures left as is)	0

Building/Area: Maint Shed

1st Floor

Rf#-2 Rm - Interior	1x8x 2L pm ind hood, F96T8 96W, magnetic ballast	4	NL055/8s - New 8' LED surface mount narrow wrap, 50,000-Hr L70 rated life, 55w, 4000K (ALE)	4
Rf#-3 Rm - Ext - Pole Mount	LED 1L post top, LED, n/a	1	DND - DND: (do not do, fixtures left as is)	1

Building/Area: Trailer

1st Floor

Rf#-4 Rm - Interior	DND (do not do, left as is), LED ?w, n/a		DND - DND: (do not do, fixtures left as is)	0

Qty for Ranger Station - Dixon Lake : **89** **89**

Recycling Offices -

PRE-RETROFIT			POST RETROFIT	
Location	Existing Fixture Description	Qty	Retrofit Code Description (Ltg Control in RED)	Qty
Building/Area: Main Building				
1st Floor				
Rf#-10 Rm - Ext-Bldg Mnt (wall)	Inc. 1L fxt, Inc. 60w, n/a	1	RL091/s - (1) LED 8.5w A19 screw in lamp, 4000K	1
Building/Area: New Building				
1st Floor				
Rf#-9 Rm - All Exterior Space	DND (do not do, left as is), LED ?w, n/a		DND - DND: (do not do, fixtures left as is)	0
Building/Area: Orginal Office Trailer				
1st Floor				
Rf#-1 Rm - Entry Lobby	2x4x 4L rec trf, F40T12 34w, magnetic ballast	2	RLT844dw - (4) 4' LED T8 lamp 10.5w, Type B, direct wire, 50,000-Hr L70 rated life, remove existing ballast from service	2
Rf#-2 Rm - RR	Inc. 1L fxt, Inc. 60w, n/a	1	RL091/s - (1) LED 8.5w A19 screw in lamp, 4000K	1
Rf#-3 Rm - Office #1	2x4x 4L rec trf, F40T12 34w, magnetic ballast	3	RLT844dw - (4) 4' LED T8 lamp 10.5w, Type B, direct wire, 50,000-Hr L70 rated life, remove existing ballast from service	3
Rf#-4 Rm - Office #2	2x4x 4L rec trf, F40T12 34w, magnetic ballast	1	RLT844dw - (4) 4' LED T8 lamp 10.5w, Type B, direct wire, 50,000-Hr L70 rated life, remove existing ballast from service	1
Rf#-5 Rm - Office #3	2x4x 4L rec trf, F40T12 34w, magnetic ballast	2	RLT844dw - (4) 4' LED T8 lamp 10.5w, Type B, direct wire, 50,000-Hr L70 rated life, remove existing ballast from service	2
Rf#-6 Rm - Office #3	2x4x 2L rec trf, LED ?w TLED, n/a	1	RLT842dw - (2) 4' LED T8 lamp 10.5w, Type B, direct wire, 50,000-Hr L70 rated life, remove existing ballast from service	1
Rf#-7 Rm - Ext-Bldg Mnt (wall)	Inc. 1L fxt, Inc. 60w, n/a	1	RL091/s - (1) LED 8.5w A19 screw in lamp, 4000K	1
Rf#-8 Rm - All Interior Space	DND (do not do, left as is), LED ?w, n/a		DND - DND: (do not do, fixtures left as is)	0
	Qty for Recycling Offices :	**12**		**12**

Rod McLeod Park -

PRE-RETROFIT			POST RETROFIT	
Location	**Existing Fixture Description**	**Qty**	**Retrofit Code Description (Ltg Control in RED)**	**Qty**
Building/Area: RR Building				
1st Floor				
Rf#-1 Rm - B RR	DND (do not do, left as is), TLED, n/a		DND - DND: (do not do, fixtures left as is)	0
Rf#-2 Rm - G RR	DND (do not do, left as is), TLED, n/a		DND - DND: (do not do, fixtures left as is)	0
Rf#-3 Rm - custodial/chase	(est) 1x4x 2L sm strip, F32T8 32w, electronic ballast	1	RLT842dw - (2) 4' LED T8 lamp 10.5w, Type B, direct wire, 50,000-Hr L70 rated life, remove existing ballast from service	1
Rf#-4 Rm - Ext-Bldg Mnt (walls) (backside)	HPS 1L wm wall pack FT, HPS 100w, HID ballast	1	NL028/wp/fc - New LED wall pack (FCO), 50,000-Hr L70 rated life, 28w (MAX)	1
Rf#-5 Rm - Ext-Bldg Mnt (walls)	HPS 1L wm wall pack FT, HPS 100w, HID ballast	1	NL028/wp/ft - New LED wall pack (FT), 50,000-Hr L70 rated life, 28w (MAX)	1
Rf#-6 Rm - Ext-Pole Mnt	LED 1L shoe box, LED ?w CC, n/a	1	DND - DND: (do not do, fixtures left as is)	1
	Qty for Rod McLeod Park :	**4**		**4**

City of Escondido - Lighting Detail Report

(sorted by building, floor, area)

Ryan Park -

PRE-RETROFIT			POST RETROFIT	
Location	**Existing Fixture Description**	**Qty**	**Retrofit Code Description (Ltg Control in RED)**	**Qty**
Building/Area: Parking Lots				
1st Floor				
Rf#-2 Rm - Ext-Pole Mnt (West Lot)	LPS 1L SB SqP, DB, LPS 180w, HID ballast	13	NL070/p/s - New LED area light, pole or bldg. mount, 50,000-Hr L70 rated life, 70w (Vly) oemB	13
Rf#-3 Rm - Ext-Pole Mnt (South)	LPS 1L SB SqP, DB, LPS 135w, HID ballast	2	NL070/p/s - New LED area light, pole or bldg. mount, 50,000-Hr L70 rated life, 70w (Vly) oemB	2
Rf#-4 Rm - Ext-Pole Mnt (South)	DND (do not do, left as is), LED 60w, n/a	18	DND - DND: (do not do, fixtures left as is)	18
Building/Area: RR Building				
1st Floor				
Rf#-5 Rm - RR entry area	CF 1L wm jelly jar, CFP-26w, CF ballast	8	RL091/s/sk - (1) LED 8.5w A19 screw in lamp, 4000K, (1) new lamp socket	8
Rf#-6 Rm - Small Family RR	CF 1L wm jelly jar, CFP-26w, CF ballast	4	RL091/s/sk - (1) LED 8.5w A19 screw in lamp, 4000K, (1) new lamp socket	4
Rf#-7 Rm - B RR	CF 1L wm jelly jar, CFP-26w, CF ballast	8	RL091/s/sk - (1) LED 8.5w A19 screw in lamp, 4000K, (1) new lamp socket	8
Rf#-8 Rm - W RR	CF 1L wm jelly jar, CFP-26w, CF ballast	8	RL091/s/sk - (1) LED 8.5w A19 screw in lamp, 4000K, (1) new lamp socket	8
Rf#-9 Rm - Custodial	(est) 1x4x 2L sm wp, F32T8 32w, electronic ballast	2	RLT842dw - (2) 4' LED T8 lamp 10.5w, Type B, direct wire, 50,000-Hr L70 rated life, remove existing ballast from service	2
Rf#-10 Rm - Grounds Rm #1	(est) 1x4x 2L sm wp, F32T8 32w, electronic ballast	4	RLT842dw - (2) 4' LED T8 lamp 10.5w, Type B, direct wire, 50,000-Hr L70 rated life, remove existing ballast from service	4
Rf#-11 Rm - Grounds Rm #2	(est) 1x4x 2L sm wp, F32T8 32w, electronic ballast	4	RLT842dw - (2) 4' LED T8 lamp 10.5w, Type B, direct wire, 50,000-Hr L70 rated life, remove existing ballast from service	4
Rf#-12 Rm - Ext-BLdg Mnt (eaves)	HPS 1L sm square, HPS 100w, HID ballast	9	NL020/sq - New LED surface mnt sq., 50,000-Hr L70 rated life, 20w (ALE)	9
Rf#-13 Rm - Ext-BLdg Mnt (eaves)	LED 1L sm square, LED ?w, n/a	1	NL020/sq - New LED surface mnt sq., 50,000-Hr L70 rated life, 20w (ALE)	1
Building/Area: Snack Building				
1st Floor				
Rf#-14 Rm - Snack Room	(est) 1x4x 2L sm wp, F32T8 32w, electronic ballast	6	RLT842dw - (2) 4' LED T8 lamp 10.5w, Type B, direct wire, 50,000-Hr L70 rated life, remove existing ballast from service	6
Rf#-15 Rm - Storage Room	(est) 1x4x 2L sm wp, F32T8 32w, electronic ballast	4	RLT842dw - (2) 4' LED T8 lamp 10.5w, Type B, direct wire, 50,000-Hr L70 rated life, remove existing ballast from service	4
Rf#-16 Rm - ? Room	(est) 1x4x 2L sm wp, F32T8 32w, electronic ballast	3	RLT842dw - (2) 4' LED T8 lamp 10.5w, Type B, direct wire, 50,000-Hr L70 rated life, remove existing ballast from service	3
Rf#-17 Rm - Ext-BLdg Mnt (eaves)	HPS 1L sm square, HPS 100w, HID ballast	9	NL020/sq - New LED surface mnt sq., 50,000-Hr L70 rated life, 20w (ALE)	9
Building/Area: Sports Fields				
1st Floor				
Rf#-1 Rm - All Sports Fields	DND (do not do, left as is), MUSCO LED, n/a		DND - DND: (do not do, fixtures left as is)	0
	Qty for Ryan Park :	**103**		**103**

Washington Park -

PRE-RETROFIT			POST RETROFIT	
Location	**Existing Fixture Description**	**Qty**	**Retrofit Code Description (Ltg Control in RED)**	**Qty**
Building/Area: All Buildings				
1st Floor				
Rf#-1 Rm - All Interior Space	DND (do not do, left as is), LED ?w, n/a		DND - DND: (do not do, fixtures left as is)	0
Rf#-2 Rm - All Exterior Space	DND (do not do, left as is), LED ?w, n/a		DND - DND: (do not do, fixtures left as is)	0
Building/Area: Parks Spaces				
1st Floor				
Rf#-3 Rm - Ext-Pole Mnt (walkways and area)	LPS 1L post top china hat (luis poulsen), LPS 55w, HID ballast	11	RL0451/s/mg - (1) LED 45w corn cob style screw in lamp, 120/277, 50,000-Hr rated life, 5000K, mogul base	11
Rf#-4 Rm - All other Exterior Space	DND (do not do, left as is), LED ?w, n/a		DND - DND: (do not do, fixtures left as is)	0
Building/Area: Sports Fields				
1st Floor				
Rf#-5 Rm - All Sports Fields	DND (do not do, left as is), MUSCO LED, n/a		DND - DND: (do not do, fixtures left as is)	0
	Qty for Washington Park :	**11**		**11**

Water Treatment Plant ("WTP") -

PRE-RETROFIT			POST RETROFIT	
Location	**Existing Fixture Description**	**Qty**	**Retrofit Code Description (Ltg Control in RED)**	**Qty**
Building/Area: All other Buildings				
1st Floor				
Rf#-13 Rm - All Interior Space	DND (do not do, left as is), LED ?w, n/a		DND - DND: (do not do, fixtures left as is)	0
Rf#-14 Rm - All Exterior Space	DND (do not do, left as is), LED ?w, n/a		DND - DND: (do not do, fixtures left as is)	0
Building/Area: Operations Building				
Downstairs				
Rf#-3 Rm - Pump Area	1x8x 2L pm ind hood, F96T12 60w, magnetic ballast	8	NL055/8s - New 8' LED surface mount narrow wrap, 50,000-Hr L70 rated life, 55w, 4000K (ALE)	8
Rf#-4 Rm - All other Interior Space	DND (do not do, left as is), LED ?w, n/a		DND - DND: (do not do, fixtures left as is)	0
Rf#-5 Rm - All Exterior Space	DND (do not do, left as is), LED ?w, n/a		DND - DND: (do not do, fixtures left as is)	0
Upstairs				
Rf#-1 Rm - All Interior Space	DND (do not do, left as is), LED ?w, n/a		DND - DND: (do not do, fixtures left as is)	0
Rf#-2 Rm - All Exterior Space	DND (do not do, left as is), LED ?w, n/a		DND - DND: (do not do, fixtures left as is)	0
Building/Area: OSG Bldg				
1st Floor				
Rf#-6 Rm - Sodium Hypochlorite Rm	HPS 1L vapor jar Exp (plug in), HPS 150w, HID ballast	16	NL060/exp - New LED surface mnt dome., 50,000-Hr L70 rated life, 60w (Rb)	16
Rf#-7 Rm - electrical room	1x4x 2L sm vapor tight, F40T12 34w, magnetic ballast	4	RLT842dw - (2) 4' LED T8 lamp 10.5w, Type B, direct wire, 50,000-Hr L70 rated life, remove existing ballast from service	4
Rf#-8 Rm - storage	1x4x 2L sm vapor tight, F32T8 32w, electronic ballast	2	RLT842dw - (2) 4' LED T8 lamp 10.5w, Type B, direct wire, 50,000-Hr L70 rated life, remove existing ballast from service	2
Rf#-9 Rm - gym	1x4x 2L sm vapor tight, F32T8 32w, electronic ballast	8	RLT842dw - (2) 4' LED T8 lamp 10.5w, Type B, direct wire, 50,000-Hr L70 rated life, remove existing ballast from service	8
Rf#-10 Rm - Motor control room (MCC)	1x4x 2L sm vapor tight, F32T8 32w, electronic ballast	8	RLT842dw - (2) 4' LED T8 lamp 10.5w, Type B, direct wire, 50,000-Hr L70 rated life, remove existing ballast from service	8
Rf#-11 Rm - All other Interior Space	DND (do not do, left as is), LED ?w, n/a		DND - DND: (do not do, fixtures left as is)	0
Rf#-12 Rm - All Exterior Space	DND (do not do, left as is), LED ?w, n/a		DND - DND: (do not do, fixtures left as is)	0
Qty for Water Treatment Plant ("WTP") :		**46**		**46**

Attachment "D"

Mechanical Equipment Schedule

Central Plant - HVAC Inventory

ID#	Building	Equipment	Existing Equipment									
			Manuf.	Model No.	Serial No.	Capactiy / Size	Year	Electrical	Discharge (Down/Side)	Economizer	To be Replaced?	Additional Notes
1	Central Plant	Cooling Tower - Single Cell	Evapco	USS29024	4107528		2006				Refurbish	
2	Central Plant	CT Fan - Motor	WorldWide Elect.	PEWWE10-12-256T	1018071V XP0	10 hp / 1175 rpm	2006	208/230-3-60			Y	91.0% Efficiency
3	Central Plant	Cooling Tower - Single Cell					2006				Refurbish	
4	Central Plant	CT Fan - Motor	Toshiba	B0106FLF2USH02	40504550	10 hp / 1175 rpm	2006	208/230-3-60			Y	92.4% Efficiency
5	Central Plant	Cooling Tower - Single Cell					2006				Refurbish	
6	Central Plant	CT Fan - Motor	Weg	W22 CC029A	13OUT22 1076247105	5 hp / 1170 rpm	2006	208/230-3-60			Y	89.5% Efficiency
7	Central Plant	CW Pump 1	Bell & Gossett	1510 BFS	0015989-01 C60	15 HP / 985 gpm / 38 ft-hd	2006				Y	
8	Central Plant	CW Pump 2	Bell & Gossett	1510 BFS	0015989-01 C60	15 HP / 985 gpm / 38 ft-hd	2006				Y	
9	Central Plant	CW Pump 1 - Motor	Weg	CC029A	27OUT15 PF84735	15 hp / 1180 rpm	2006	208/230-3-60			Y	91.7% Efficiency
10	Central Plant	CW Pump 2 - Motor	Weg	CC029A	27OUT15 PF84735	15 hp / 1180 rpm	2006	208/230-3-60			Y	91.7% Efficiency
11	Central Plant	CW Pump 3				7.5 HP/ 486 gpm / 36 ft-hd	2006				Y	Info based on As-Built / tag missing.
12	Central Plant	CW Pump 3 - Motor	US Motor	AE47	UJ10S1AM	10 hp / 3505 rpm	2006	208/230-3-60			Y	88.5% Efficiency
13	Central Plant	NG Driven Chiller 1	Tecochill	CH350-X	20161	350 tons	2006	460-3-60			Y	Replace with mag. bearing
14	Central Plant	NG Driven Chiller 2	Tecochill	CH350-X	20161	350 tons	2006	460-3-60			Y	Replace with mag. bearing
15	Central Plant	NG Driven Chiller	-	-	-		2006				Y	
16	Central Plant	DX Chiller 4	Trane	CGAFC604AKA	C06A00606	60 tons	2006	460-3-60			Y	
17	Central Plant	Primary CHW Pump 3	Bell & Gossett	1510 BFS	C016004-01 C60	3 HP / 164 gpm / 35 ft-hd	2006				Y	
18	Central Plant	Primary CHW Pump 3 - Motor	Weg			3 HP / 1760 rpm	2006				Y	
19	Central Plant	Primary CHW Pump 4	Bell & Gossett	1510 BFS	C015986-01 C60	3 HP / 130 gpm / 35 ft-hd	2006				Y	
20	Central Plant	Primary CHW Pump 4 - Motor	Weg	CC029A	07JUL05 BS38645	3 hp / 1760 rpm	2006	208/230-3-60			Y	89.5% Efficiency
21	Central Plant	Primary CHW Pump 1	Bell & Gossett	1510 BFS 4BC	C015969 01 C60	5 HP / 373 gpm / 35 ft-hd	2006				Y	
22	Central Plant	Primary CHW Pump 1 - Motor	Weg	CC029A	31MAI05 BR83614	5 hp / 1160 rpm	2006	208/230-3-60			Y	89.5% Efficiency
23	Central Plant	Primary CHW Pump 2	Bell & Gossett	1510 BFS 4BC	C015969 01 C60	5 HP / 373 gpm / 35 ft-hd	2006				Y	
24	Central Plant	Primary CHW Pump 2 - Motor	Weg	CC029A	31MAI05 BR83614	5 hp / 1160 rpm	2006	208/230-3-60			Y	
25	Central Plant	Secondary CHW Pump 5	Bell & Gossett	1510	CO15988-02C60	40 HP / 580 gpm/140 ft-hd	2006				Y	
26	Central Plant	Secondary CHW Pump 6	Bell & Gossett	1510	CO15988-02C60	40 HP / 580 gpm/140 ft-hd	2006				Y	
27	Central Plant	Secondary CHW Pump 5 - Motor	Weg	W40 CC029A	1079227712	40 hp / 1775 rpm	2006	208/230-3-60			Y	Reuse VFD
28	Central Plant	Secondary CHW Pump 6 - Motor	Weg	W40 CC029A	1079227712	40 hp / 1775 rpm	2006	208/230-3-60			Y	Reuse VFD
31	Central Plant	HHW Pump 1	Taco	11-30121	01D003030Z B	320 gpm / 104 ft-hd	2006				Y	
32	Central Plant	HHW Pumps 2	Taco	11-30121	01D003030Z B	320 gpm / 104 ft-hd	2006				Y	
33	Central Plant	HHW Pump 1 - Motor	Nidec	FP86	Y 06 768557-001 M 0023	15 hp / 1775 rpm	2006	208/230-3-60			Y	93.0% Efficiency
34	Central Plant	HHW Pump 2 - Motor	Nidec	FP86	Y 06 768557-001 M 0023	15 hp / 1775 rpm	2006	208/230-3-60			Y	93.0% Efficiency
35	Central Plant	HX Pump	Bell & Gossett	RL-75	18L084 C50		2006				N	Demo w/ Heat Recovery System
36	Central Plant	HX Pump	Bell & Gossett	RL-75	18L084 C50		2006				N	Demo w/ Heat Recovery System
37	Central Plant	HX Pump	Bell & Gossett	RL-75	18L084 C50		2006				N	Demo w/ Heat Recovery System
38	Central Plant	HX Pump - Motor	Baldor			3 hp	2006				N	Demo w/ Heat Recovery System
39	Central Plant	HX Pump - Motor	Baldor			3 hp	2006				N	Demo w/ Heat Recovery System
40	Central Plant	HX Pump - Motor	Baldor			3 hp	2006				N	Demo w/ Heat Recovery System

City Hall - HVAC Inventory

ID#	Building	Equipment	Existing Equipment									
			Manuf.	Model No.	Serial No.	Capactiy / Size	Year	Electrical	Discharge (Down/Side)	Economizer	To be Replaced?	Additional Notes
3	City Hall	Packaged Heat Pump	Carrier	50TFQ012---601GA	0101G30305	10	2001	460-3-60	Side	N	Y	
10	City Hall	DX Chiller	Trane	CGAFC404AGA10000F000...	C02H07353	40	2002	460-3-60	Side	N	Y	
14	City Hall	Split Sys Heat Pump	Arcoaire	HHP224AK--	L020378777	2	2002	208/230-1-60	Down	N	Y	
15	City Hall	Split Sys Heat Pump	Mitsubishi	PUH24EK	7XE00065A	2	2007	208/230-1-60	Down	N	Y	

Don E. Anderson - HVAC Inventory

ID#	Building	Equipment	Existing Equipment									
			Manuf.	Model No.	Serial No.	Capactiy / Size	Year	Electrical	Discharge (Down/Side)	Economizer	To be Replaced?	Additional Notes
1	Don E. Anderson	Packaged Heat Pump	Trane	WCH048F100AA	7385JKS3H	4	2007	208/230-1-60	Side	N	Y	
2	Don E. Anderson	Packaged Heat Pump	Trane	WCH048F100AA	7391JJU3H	4	2007	208/230-1-60	Side	N	Y	

EVCC - HVAC Inventory

ID#	Building	Equipment	Existing Equipment									
			Manuf.	Model No.	Serial No.	Capactiy / Size	Year	Electrical	Discharge (Down/Side)	Economizer	To be Replaced?	Additional Notes
6	EVCC	Packaged Gas / Elec	Trane	YHC060E3RLA0Z000000000000	104710652L	5	2010	208/230-3-60	Down	Y	Y	
7	EVCC	Packaged Gas / Elec	Trane	YHC060E3RLA0Z000000000000	104710660L	5	2010	208/230-3-60	Down	Y	Y	
11	EVCC	Packaged Gas / Elec	Trane	YHC060E3RLA10000000000000	104710668L	5	2010	208/230-3-60	Down	Y	Y	
12	EVCC	Packaged Gas / Elec	Trane	YHC060E3RLA10000000000000	104710676L	5	2010	208/230-3-60	Down	Y	Y	
20	EVCC	Packaged Gas / Elec	Trane	YHC060E3RLA0Z000000000000	104710684L	5	2010	208/230-3-60	Down	Y	Y	

Fire Station 1 - HVAC Inventory

ID#	Building	Equipment	Existing Equipment									
			Manuf.	Model No.	Serial No.	Capactiy / Size	Year	Electrical	Discharge (Down/Side)	Economizer	To be Replaced?	Additional Notes
1	Fire Station 1	Packaged Gas / Elec	Carrier	48HJM004---541--	3608G30458	3	2008	208/230-3-60	Side	N	Y	Replacing with Pkg HP.
2	Fire Station 1	Packaged Gas / Elec	Carrier	48HJD007---551--	3808G50516	6	2008	208/230-3-60	Side	N	Y	Replacing with Pkg HP.
3	Fire Station 1	Packaged Gas / Elec	Carrier	48HJL006--541--	3808G40303	5	2008	208/230-3-60	Side	N	Y	Replacing with Pkg HP.
4	Fire Station 1	Packaged Gas / Elec	Carrier	48HJD007---551--	3808G50525	6	2008	208/230-3-60	Side	N	Y	Replacing with Pkg HP.
5	Fire Station 1	Packaged Gas / Elec	Carrier	48HJL005--551--	4308G20372	4	2008	208/230-3-60	Side	N	Y	Replacing with Pkg HP.
6	Fire Station 1	Packaged Gas / Elec	Carrier	48HJL006---541--	3808G40301	5	2008	208/230-3-60	Side	N	Y	Replacing with Pkg HP.
8	Fire Station 1	Packaged Gas / Elec	Carrier	48HJD012---571--	4208G11513	10	2008	208/230-3-60	Side	Y	Y	Replacing with Pkg HP. Add Power Exhaust
9	Fire Station 1	Packaged Gas / Elec	Carrier	48HJL006---541--	3808G40302	5	2008	208/230-3-60	Side	Y	Y	Replacing with Pkg HP.

Fire Station 2 - HVAC Inventory

ID#	Building	Equipment	Existing Equipment									
			Manuf.	Model No.	Serial No.	Capactiy / Size	Year	Electrical	Discharge (Down/Side)	Economizer	To be Replaced?	Additional Notes
1	Fire Station 2	Split Sys Heat Pump	York	E1FB024S06A	ELAM385651	2	1992	208/230-1-60	Down	N	Y	
2	Fire Station 2	Split Sys Furnace	York	------A030S06A	EHAM322209	2.5	1992	208/230-1-60		N	Y	Replacing w/ SS Heat Pump.
3	Fire Station 2	Split Sys Furnace	York	H1----------	EHAM310560	3	1992	208/230-1-60		N	Y	Replacing w/ SS Heat Pump.
4	Fire Station 2	Split Sys Furnace	York	H1DA036S0--	EHAM310558	3	1992	208/230-1-60		N	Y	Replacing w/ SS Heat Pump.
5	Fire Station 2	Split Sys Furnace	York	H1DA048S25A	ECAM083743	4	1992	208/230-3-60		N	Y	Replacing w/ SS Heat Pump.

Fire Station 3 - HVAC Inventory

ID#	Building	Equipment	Existing Equipment									
			Manuf.	Model No.	Serial No.	Capactiy / Size	Year	Electrical	Discharge (Down/Side)	Economizer	To be Replaced?	Additional Notes
2	Fire Station 3	Packaged Gas / Elec	Carrier	48HJM006---541--	4807G30241	5	2007	208/230-3-60	Down	Y	Y	Replacing with Pkg HP.
3	Fire Station 3	Packaged Gas / Elec	Carrier	48HJM005---551--	4807G30321	4	2007	208/230-3-60	Down	Y	Y	Replacing with Pkg HP.
4	Fire Station 3	Packaged Gas / Elec	Carrier		------244	4	2007	208/230-3-60	Down	Y	Y	Replacing with Pkg HP.
6	Fire Station 3	Packaged Gas / Elec	Carrier	48HJN004---541	4807G40245	3	2007	208/230-3-60	Down	Y	Y	Replacing with Pkg HP.
7	Fire Station 3	Packaged Gas / Elec	Carrier	48HJM005---551--	4807G20295	4	2007	208/230-3-60	Down	Y	Y	Replacing with Pkg HP.

Fire Station 5 - HVAC Inventory

ID#	Building	Equipment	Existing Equipment									
			Manuf.	Model No.	Serial No.	Capactiy / Size	Year	Electrical	Discharge (Down/Side)	Economizer	To be Replaced?	Additional Notes
1	Fire Station 5	Split Sys Heat Pump	Trane	TWR024C100A4	P275YYAFF	2	1999	208/230-1-60	Down	N	Y	Air Handler Info: Trane, Model # TWG025A140B0, SN: P144U3R1Y
2	Fire Station 5	Split Sys Furnace	Rheem	RAND-024JAZ	7293 M1707 06674	2	2007	208/230-1-60		N	Y	Replace w/ SS Heat Pump.
3	Fire Station 5	Split Sys Furnace	Rheem	RAND-036JAZ	7297 M4607 03887	3	2007	208/230-1-60		N	Y	Replace w/ SS Heat Pump.
4	Fire Station 5	Split Sys Furnace	Rheem	RAND-048JAZ	7303 M4307 05133	4	2007	208/230-1-60		N	Y	Replace w/ SS Heat Pump.

Fire Station 6 - HVAC Inventory

ID#	Building	Equipment	Existing Equipment									
			Manuf.	Model No.	Serial No.	Capactiy / Size	Year	Electrical	Discharge (Down/Side)	Economizer	To be Replaced?	Additional Notes
1	Fire Station 6	Packaged Gas / Elec	York	ZJ048S10N2BAA1C	N0D8788643	4	2008	208/230-3-60	Down	Y	Y	Replacing with Pkg HP.
2	Fire Station 6	Packaged Gas / Elec	York	ZJ048S10N2BAA1C	N0D8788644	4	2008	208/230-3-60	Down	Y	Y	Replacing with Pkg HP.
3	Fire Station 6	Packaged Gas / Elec	York	ZJ036S08N2BAA1C	N0D8788641	3	2008	208/230-3-60	Down	Y	Y	Replacing with Pkg HP.
5	Fire Station 6	Packaged Gas / Elec	York	ZJ036S08N2BAA1C	N0D8788642	3	2008	208/230-3-60	Down	Y	Y	Replacing with Pkg HP.

Fire Station 7 - HVAC Inventory

ID#	Building	Equipment	Existing Equipment									
			Manuf.	Model No.	Serial No.	Capactiy / Size	Year	Electrical	Discharge (Down/Side)	Economizer	To be Replaced?	Additional Notes
1	Fire Station 7	Packaged Gas / Elec	York	DJ048N10N2AAA2B	N0D8765886	4	2008	208/230-3-60	Down	Y	Y	Replacing with Pkg HP.
2	Fire Station 7	Packaged Gas / Elec	York	DJ036N08N2AAA2A	N0H7151819	3	2007	208/230-3-60	Down	Y	Y	Replacing with Pkg HP.
4	Fire Station 7	Packaged Gas / Elec	York	DJ036N08N2AAA2A	N0G7098876	3	2007	208/230-3-60	Down	Y	Y	Replacing with Pkg HP.
5	Fire Station 7	Packaged Gas / Elec	York	DJ048N10N2AAA2B	N0D8765885	4	2008	208/230-3-60	Down	Y	Y	Replacing with Pkg HP.
7	Fire Station 7	Packaged Gas / Elec	York	DJ060N08N2AAA3A	N0M7443423	5	2008	208/230-3-60	Down	Y	Y	Replacing with Pkg HP.

Mathes Community Center - HVAC Inventory

ID#	Building	Equipment	Existing Equipment									
			Manuf.	Model No.	Serial No.	Capactiy / Size	Year	Electrical	Discharge (Down/Side)	Economizer	To be Replaced?	Additional Notes
2	Mathes Commnuity Center	Packaged Gas / Elec	Rheem	Illegible	Illegible	2	1996	208/230-3-60	Down	Y	Y	Replacing with Pkg HP.
3	Mathes Commnuity Center	Packaged Gas / Elec	Rheem	Illegible	Illegible	3	1996	208/230-3-60	Down	Y	Y	Replacing with Pkg HP.
4	Mathes Commnuity Center	Packaged Gas / Elec	Rheem	RKKA-A060CL105	1X5643ADAAF429613796	5	1996	208/230-3-60	Down	Y	Y	Replacing with Pkg HP.
5	Mathes Commnuity Center	Packaged Gas / Elec	Rheem	Illegible	Illegible	3	1996	208/230-3-60	Down	Y	Y	Replacing with Pkg HP.
6	Mathes Commnuity Center	Packaged Gas / Elec	Rheem	Illegible	Illegible	5	1996	208/230-3-60	Down	Y	Y	Replacing with Pkg HP.
8	Mathes Commnuity Center	Packaged Gas / Elec	Rheem	Illegible	Illegible	5	1996	208/230-3-60	Down	Y	Y	Replacing with Pkg HP.
9	Mathes Commnuity Center	Packaged Gas / Elec	Rheem	Illegible	Illegible	5	1996	208/230-3-60	Down	Y	Y	Replacing with Pkg HP.

Oak Hill Activity Center - HVAC Inventory

ID#	Building	Equipment	Existing Equipment									
			Manuf.	Model No.	Serial No.	Capactiy / Size	Year	Electrical	Discharge (Down/Side)	Economizer	To be Replaced?	Additional Notes
1	Oak Hill Activity Center	Mini Split	Mitsubishi	MUH09NW	8000380T	0.75	2008	115-1-60		N	Y	Indoor unit was not accessible - Add Vandal proof cage
2	Oak Hill Activity Center	Split Sys Furnace	Carrier	538ANX0600000B	1701X0890198	5	2001	208/230-1-60		N	Y	Furnace: Carrier # 350MAV060080 / Replace with SS Heat Pump

Public Works Yard - HVAC Inventory

ID#	Building	Equipment	Existing Equipment									
			Manuf.	Model No.	Serial No.	Capactiy / Size	Year	Electrical	Discharge (Down/Side)	Economizer	To be Replaced?	Additional Notes
1	Public Works Yard	Split Sys Furnace	Illegible	Illegible	Illegible	3	>15			N	Y	Assumed capacity and age
6	Public Works Yard	Split Sys Heat Pump	Goodman	CPE18-1AB	9207013874	1.5	1992	208/230-1-60		N	Y	Air Handler Info: Goodman, Model # A18-00, SN: 9306082000
8	Public Works Yard	Split Sys Heat Pump	Trane	TWA090A300FB	82935TYAD	7.5	2008	208/230-3-60		N	Y	Indoor Unit Info: Trane, Model # TWE090B300EL, SN: 7064M3CBD
9	Public Works Yard	Wall Mount HP	Bard	WH361-A05XX4XXX	125J950939212-02	3	1995	208/230-1-60		N	Y	

Lake Wohlford Ranger Station - HVAC Inventory

ID#	Building	Equipment	Existing Equipment									
			Manuf.	Model No.	Serial No.	Capactiy / Size	Year	Electrical	Discharge (Down/Side)	Economizer	To be Replaced?	Additional Notes
1	Ranger Station	Wall Mount HP	Bard	WA241-A10XX4XXX	140C001450966-02	2	2000	208/230-1-60		N	Y	

Real Property - HVAC Inventory

ID#	Building	Equipment	Existing Equipment									
			Manuf.	Model No.	Serial No.	Capactiy / Size	Year	Electrical	Discharge (Down/Side)	Economizer	To be Replaced?	Additional Notes
3	Escondido Education Compact	Packaged Gas / Elec	Trane	4YCC3024A106-AA	9361FXU9H	2	2009	208/230-1-60	Down	Y	Y	
5	Escondido Education Compact	Packaged Gas / Elec	Rheem	RKKA-A048JK08X	2A6020ADAAF260018910	4	2009	208/230-1-60	Side	N	Y	Replacing with Pkg HP.
6	Escondido Education Compact	Split Sys Furnace		No tag info		3	>15			N	Y	Replacing with SS Heat Pump.
7	Escondido Education Compact	Packaged Gas / Elec	Trane	2YCC3030A1040AA	8234KPP9H	2.5	2008	208/230-1-60	Side	Y	Y	Replacing with Pkg HP.

Recycling Office - HVAC Inventory

ID#	Building	Equipment	Existing Equipment									
			Manuf.	Model No.	Serial No.	Capactiy / Size	Year	Electrical	Discharge (Down/Side)	Economizer	To be Replaced?	Additional Notes
1	Recycling Office	Wall Mount HP	Bard	WH242-A04XX4XXX	140J031827043-02	2	2003	208/230-1-60		N	Y	
2	Recycling Office	Wall Mount HP	Bard	WH242-A10XX4XXX	140N031804355-02	2	2003	208/230-1-60		N	Y	

Grape Day Park Historical Sites - HVAC Inventory

ID#	Building	Equipment	Existing Equipment									
			Manuf.	Model No.	Serial No.	Capactiy / Size	Year	Electrical	Discharge (Down/Side)	Economizer	To be Replaced?	Additional Notes
4	Grape Day Park	Split Sys Furnace	Ameristar	2A7B0048A1000AA	44645WA3F	4	2004	208/230-1-60		N	Y	Furnace Info: Carrier, Model # NTN6075HFG1, SN: L013368951

Kit Carson Park - HVAC Inventory

ID#	Building	Equipment	Existing Equipment									
			Manuf.	Model No.	Serial No.	Capactiy / Size	Year	Electrical	Discharge (Down/Side)	Economizer	To be Replaced?	Additional Notes
2	Sports Center	Split Sys Heat Pump	Carrier	25HBD3420310	0907E12553	3.5	2007	208/230-1-60		N	Y	Air Handler Info: Carrier, Model # FC4DNF042000AAAA, SN: 0507A85020

Dixon Lake Cottage Rental - HVAC Inventory

ID#	Building	Equipment	Existing Equipment									
			Manuf.	Model No.	Serial No.	Capactiy / Size	Year	Electrical	Discharge (Down/Side)	Economizer	To be Replaced?	Additional Notes
1	Rental Property	Split Sys Heat Pump	Illegible	Illegible	Illegible	2	2004				Y	

Vineyard Golf Course - HVAC Inventory

ID#	Building	Equipment	Existing Equipment									
			Manuf.	Model No.	Serial No.	Capactiy / Size	Year	Electrical	Discharge (Down/Side)	Economizer	To be Replaced?	Additional Notes
1	Vinyard Golf Course	Split Sys Heat Pump	York	E1FB009S25A	EBCH104110	0.75	1994	208/230-3-60		N	Y	Indoor: York N4AHD14A06A, SN: EEBS133954
2	Vinyard Golf Course	Split Sys Heat Pump	York	E1FB036S25A	ECBM054493	3	1993	208/230-3-60		N	Y	Indoor: York N3AHD20A06A, SN: EABS003899

HARFF - HVAC Inventory

ID#	Building	Equipment	Existing Equipment									
			Manuf.	Model No.	Serial No.	Capactiy / Size	Year	Electrical	Discharge (Down/Side)	Economizer	To be Replaced?	Additional Notes
15	HARFF	Split Sys Heat Pump	Trane	TTA120B400CA	Z051LA3AH	10	2001	460-3-60		N	Y	Indoor: Trane TWE120B300CA, SN: Z042MCM5H
16	HARFF	Packaged Gas / Elec	Trane	TSD150F4R0A03D004D00000000...	140210312D	12.5	2014	460-3-60	Down	Y	Y	Unit has had many issues. Replace w/ Heat Pump
20	HARFF	Packaged Heat Pump	Trane	WCD090C400BC	R45100895D	7.5	2000	460-3-60	Down	Y	Y	

Water Treatment Plant - HVAC Inventory

ID#	Building	Equipment	Manuf.	Model No.	Serial No.	Capactiy / Size	Year	Electrical	Discharge (Down/Side)	Economizer	To be Replaced?	Additional Notes
1	Water Treatment Plant	Packaged Gas / Elec	Daikin	DCG1202104VXXXAC	1807043386	10	2018	460-3-60	Down	Y	Y	Replacing with Pkg HP. Unit is on Propane.
2	Water Treatment Plant	Mini Split	Mitsubishi	PUH18EK		1.5	2008	208/230-1-60		N	Y	Assumed year to be 2008 based on other Mini-Splits at site.
3	Water Treatment Plant	Mini Split	Mitsubishi	PUH24EK		2	2008	208/230-1-60		N	Y	Assumed year to be 2008 based on other Mini-Splits at site.
4	Water Treatment Plant	Mini Split	Mitsubishi	MUH12NN		1	2008			N	Y	Indoor Unit Info: Mitsubishi, Model #MSH12NN, SN: 8000357T
6	Water Treatment Plant	Packaged Gas / Elec	Daikin	DBG0480-----XXAA	1604400045	4	2016	460-3-60	Down	Y	Y	Replacing with Pkg HP. Unit is on Propane.

Attachment "E”

Technical Appendix

SG130 | 9.0 L | 130 kW

INDUSTRIAL SPARK-IGNITED GENERATOR SET

EPA Certified Stationary Emergency

Standby Power Rating

130 kW, 163 kVA, 60 Hz

USA ENGINEERED & BUILT*

*Assembled in the USA using domestic and foreign parts

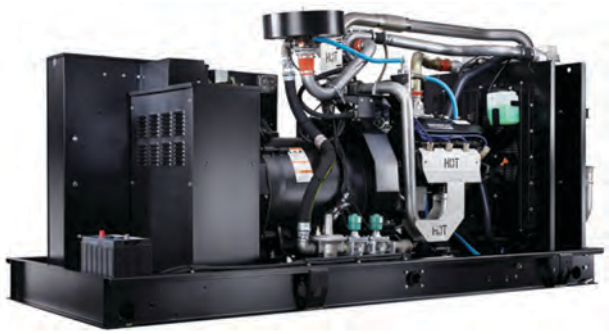

Image used for illustration purposes only

Codes and Standards

Generac products are designed to the following standards:.

- UL2200, UL508, UL489
- CSA C22.2
- BS5514 and DIN 6271
- SAE J1349
- NFPA 37, 70, 99, 110
- NEC700, 701, 702, 708
- NEMA ICS10, MG1, 250, ICS6, AB1
- ANSI C62.41
- IBC 2009, CBC 2010, IBC 2012, ASCE 7-05, ASCE 7-10, ICC-ES AC-156 (2012)

Powering Ahead

Generac provides superior quality by designing and manufacturing most of its generator components, such as alternators, enclosures, control systems and communications software. Generac also makes its own spark-ignited engines, and you'll find them on every Generac gaseous-fueled generator. We engineer and manufacture them from the block up — all at our facilities throughout Wisconsin. Applying natural gas and LP-fueled engines to generators requires advanced engineering expertise for reliability, durability and necessary performance. By designing specifically for these dry, hotter-burning fuels, the engines last longer and require less maintenance. Building our own engines also means we control every step of the supply chain and delivery process, so you benefit from single-source responsibility.

Plus, Generac Industrial Power's distribution network provides all parts and service so you don't have to deal with third-party suppliers. It all leads to a positive owner experience and higher confidence level. Generac spark-ignited engines give you more options in commercial and industrial generator applications as well as extended run time from utility-supplied natural gas.

SG130 | 9.0 L | 130 kW

INDUSTRIAL SPARK-IGNITED GENERATOR SET

EPA Certified Stationary Emergency

STANDARD FEATURES

ENGINE SYSTEM
- Oil Drain Extension
- Air Cleaner
- Fan Guard
- Stainless Steel Flexible Exhaust Connection
- Factory Filled Oil and Coolant
- Radiator Duct Adapter (Open Set Only)
- Critical Exhaust Silencer

FUEL SYSTEM
- Fuel Line - NPT Connection
- Primary and Secondary Fuel Shutoff

COOLING SYSTEM
- Closed Coolant Recovery System
- UV/Ozone Resistant Hoses
- Factory-Installed Radiator
- 50/50 Ethylene Glycol Antifreeze
- Radiator Drain Extension

ELECTRICAL SYSTEM
- Battery Charging Alternator
- Battery Cables
- Battery Tray
- Rubber-Booted Engine Electrical Connections
- Solenoid Activated Starter Motor

ALTERNATOR SYSTEM
- GENprotect™
- Class H Insulation Material
- 2/3 Pitch
- Skewed Stator
- Brushless Excitation
- Sealed Bearing
- Amortisseur Winding
- Full Load Capacity Alternator

GENERATOR SET
- Internal Genset Vibration Isolation
- Separation of Circuits - High/Low Voltage
- Separation of Circuits - Multiple Breakers
- Wrapped Exhaust Piping
- Standard Factory Testing
- 2 Year Limited Warranty (Standby Rated Units)
- Silencer Mounted in the Discharge Hood (Enclosed Only)

ENCLOSURE (If Selected)
- Rust-Proof Fasteners with Nylon Washers to Protect Finish
- High Performance Sound-Absorbing Material (Sound Attenuation Enclosures)
- Gasketed Doors
- Stamped Air-Intake Louvers
- Upward Facing Discharge Hoods (Radiator and Exhaust)
- Stainless Steel Lift Off Door Hinges
- Stainless Steel Lockable Handles
- RhinoCoat™ - Textured Polyester Powder Coat Paint

CONTROL SYSTEM

Digital H Control Panel- Dual 4x20 Display

Program Functions
- Programmable Crank Limiter
- 7-Day Programmable Exerciser
- Special Applications Programmable Logic Controller
- RS-232/485 Communications
- 3 Phase Sensing Digital Voltage Regulator
- 2-Wire Start Capability
- Date/Time Fault History (Event Log)
- Isochronous Governor Control
- Waterproof/Sealed Connectors
- Audible Alarms and Shutdowns
- Not in Auto (Flashing Light)
- Auto Off/Manual Switch
- E-Stop (Red Mushroom-Type)
- NFPA110 Level I and II (Programmable)
- Customizable Alarms, Warnings, and Events
- Modbus® Protocol
- Predictive Maintenance Algorithm
- Sealed Boards
- Password Parameter Adjustment Protection
- Single Point Ground
- 16 Channel Remote Trending
- 0.2 msec High Speed Remote Trending
- Alarm Information Automatically Annunciated on the Display

Full System Status Display
- Power Output (kW)
- Power Factor
- kW Hours, Total, and Last Run
- Real/Reactive/Apparent Power
- All Phase AC Voltage
- All Phase Currents
- Oil Pressure
- Coolant Temperature
- Coolant Level
- Engine Speed
- Battery Voltage
- Frequency

Alarms and Warnings
- Oil Pressure
- Coolant Temperature
- Coolant Level
- Engine Overspeed
- Battery Voltage
- Alarms and Warnings Time and Date Stamped
- Snap Shots of Key Operation Parameters During Alarms and Warnings
- Alarms and Warnings Spelled Out (No Alarm Codes)

PARALLELING CONTROLS
- Auto-Synchronization Process
- Isochronous Load Sharing
- Reverse Power Protection
- Maximum Power Protection
- Electrically Operated, Mechanically Held Paralleling Switch
- Sync Check System
- Independent On-Board Paralleling
- Optional Programmable Logic Full Auto Back-Up Controls (PLS)
- Shunt Trip and Auxiliary Contact

SG130 | 9.0 L | 130 kW

INDUSTRIAL SPARK-IGNITED GENERATOR SET

EPA Certified Stationary Emergency

CONFIGURABLE OPTIONS

ENGINE SYSTEM
- Engine Block Heater
- Oil Heater
- Air Filter Restriction Indicator
- Stone Guard (Open Set Only)
- Critical Exhaust Silencer (Open Set Only/Standard on Ultra Low Emissions Option)

ELECTRICAL SYSTEM
- 2.5A UL Battery Charger
- 10A UL Battery Charger
- Battery Warmer

ALTERNATOR SYSTEM
- Alternator Upsizing
- Anti-Condensation Heater
- Tropical Coating
- Permanent Magnet Excitation

CIRCUIT BREAKER OPTIONS
- Main Line Circuit Breaker
- Electronic Trip Breakers

GENERATOR SET
- GenLink® Communications Software (English Only)
- Extended Factory Testing (3 Phase Only)
- IBC Seismic Certification
- 8 Position Load Center

ENCLOSURE
- Standard Enclosure
- Level 1 Sound Attenuation
- Level 2 Sound Attenuation
- Steel Enclosure
- Aluminum Enclosure
- AC/DC Enclosure Lighting Kit
- Door Alarm Switch

CONTROL SYSTEM
- Oil Temperature Sender with Indication Alarm
- Remote E-Stop (Break Glass-Type, Surface Mount)
- Remote E-Stop (Red Mushroom-Type, Surface Mount)
- Remote E-Stop (Red Mushroom-Type, Flush Mount)
- Remote Communication - Modem
- 10A Run Relay
- Ground Fault Indication and Protection Functions

WARRANTY (Standby Gensets Only)
- 2 Year Extended Limited Warranty
- 5 Year Extended Limited Warranty
- 7 Year Extended Limited Warranty
- 10 Year Extended Limited Warranty

ENGINEERED OPTIONS

ENGINE SYSTEM
- Coolant Heater Ball Valves
- Fluid Containment Pan

CONTROL SYSTEM
- Battery Disconnect Switch

GENERATOR SET
- Special Testing
- Battery Box

ENCLOSURE
- Motorized Dampers
- Enclosure Ambient Heaters
- Up to 200 MPH Wind Load Rating*

SG130 | 9.0 L | 130 kW

INDUSTRIAL SPARK-IGNITED GENERATOR SET

EPA Certified Stationary Emergency

APPLICATION AND ENGINEERING DATA

ENGINE SPECIFICATIONS

General

Make	Generac
Cylinder #	8
Type	V
Displacement - in³ (L)	540 (8.9)
Bore - in (mm)	4.49 (114.3)
Stroke - in (mm)	4.25 (107.95)
Compression Ratio	10.5:1
Intake Air Method	Turbocharged/Aftercooled
Number of Main Bearings	5
Connecting Rods	Forged
Cylinder Head	Cast Iron
Cylinder Liners	No
Ignition	High Energy
Piston Type	Aluminum Alloy
Crankshaft Type	Forged Steel
Lifter Type	Hydraulic Roller
Intake Valve Material	Steel Alloy
Exhaust Valve Material	Stainless Steel
Hardened Valve Seats	Yes

Engine Governing

Governor	Electronic
Frequency Regulation (Steady State)	±0.25%

Lubrication System

Oil Pump Type	Gear Driven
Oil Filter Type	Full-Flow Spin-On Cartridge
Crankcase Capacity: qt (L)	8.0 (8.5)

Cooling System

Cooling System Type	Pressurized Closed
Water Pump Flow - gal/min (l/min)	26
Fan Type	Pusher
Fan Speed (RPM)	2,330
Fan Diameter - in (mm)	22 (558)

Fuel System

Fuel Type	Natural Gas, Propane Vapor/ Liquid
Carburetor	Down Draft
Secondary Fuel Regulator	Standard
Fuel Shut Off Solenoid	Standard (Dual)
Operating Fuel Pressure (NG/LPV)	7"-11" H_2O
Optional Operating Fuel Pressure (LPL)	30 - 312 psi

*When designing the external fuel system, assume a 20% safety factor to the upper and lower limit of the specified fuel pressure range to account for site variation and measurement at the generator test port. Refer to Generac 10000046207, latest rev, for proper gas supply guidelines (Contact Factory for Details).

Engine Electrical System

System Voltage	12 VDC
Battery Charger Alternator	Standard
Battery Size	See Battery Index 0161970SBY
Battery Voltage	12 VDC
Ground Polarity	Negative

ALTERNATOR SPECIFICATIONS

Standard Model	Generac 520
Poles	4
Field Type	Revolving
Insulation Class - Rotor	H
Insulation Class - Stator	H
Total Harmonic Distortion	<5%
Telephone Interference Factor (TIF)	<50

Standard Excitation	Brushless
Bearings	Single Sealed
Coupling	Direct via Flexible Disc
Prototype Short Circuit Test	Yes
Voltage Regulator Type	Full Digital
Number of Sensed Phases	3
Regulation Accuracy (Steady State)	±0.25%

SG130 | 9.0 L | 130 kW

INDUSTRIAL SPARK-IGNITED GENERATOR SET

EPA Certified Stationary Emergency

OPERATING DATA

POWER RATINGS

		Standby
Single-Phase 120/240 VAC @1.0pf	130 kW/130 kVA	Amps: 542
Three-Phase 120/208 VAC @0.8pf	130 kW/163 kVA	Amps: 451
Three-Phase 120/240 VAC @0.8pf	130 kW/163 kVA	Amps: 391
Three-Phase 277/480 VAC @0.8pf	130 kW/163 kVA	Amps: 195
Three-Phase 346/600 VAC @0.8pf	130 kW/163 kVA	Amps: 156

STARTING CAPABILITIES (skVA)

skVA vs. Voltage Dip

120/240 VAC 1Ø	30%	277/480 VAC 3Ø	30%	208/240 VAC 3Ø	30%
A0130044N21	105	K0130124Y21	327	K0130124Y21	327
A0150044N21	260	K0150124Y21	326	K0150124Y21	244
A0200044N21	459	K0200124Y21	478	K0200124Y21	361

FUEL CONSUMPTION RATES*

Natural Gas – ft³/hr (m³/hr)		Propane Vapor – ft³/hr (m³/hr)		Propane Liquid – gal/hr	
Percent Load	Standby	Percent Load	Standby	Percent Load	Standby
25%	378 (10.7)	25%	204.2 (5.8)	25%	5.70
50%	791.2 (22.4)	50%	341.8 (9.7)	50%	9.54
75%	1,144.5 (32.4)	75%	470.0 (13.3)	75%	13.12
100%	1,496.0 (42.4)	100%	593.7 (16.8)	100%	16.57

*1.5X maximum site rated fuel consumption should be used for gas supply design practices. Refer to Generac 10000046207, latest rev., for more information or contact factory for details.

COOLING

		Standby
Air Flow (inlet air combustion and radiator)	ft³/min (m³/min)	5,757 (163.0)
Coolant Flow per Minute	gal/min (L/min)	26 (98)
Coolant System Capacity	gal (L)	6.0 (22.7)
Heat Rejection to Coolant	BTU/hr	302,400
Maximum Radiator Backpressure	in H_2O (kPa)	0.5 (0.12)

COMBUSTION AIR REQUIREMENTS

	Standby
Flow at Rated Power cfm — (m³/min)	349 (9.9)

ENGINE

		Standby
Rated Engine Speed	RPM	1,800
Horsepower at Rated kW**	hp	200
Piston Speed	ft/min	1,275
BMEP	psi	162

** Refer to “Emissions Data Sheet” for maximum bHP for EPA and SCAQMD permitting purposes.

EXHAUST

		Standby
Exhaust Flow (Rated Output)	cfm (m³/min)	1,341 (38.0)
Maximum Exhaust Backpressure	inHG (kPa)	0.75 (2.54)
Exhaust Temp (Rated Output - Post Silencer)	°F (°C)	1,112 (600)
Exhaust Size Outlet	in (mm)	3.0" ID Flex (No Silencer)

Deration – Operational characteristics consider maximum ambient conditions. Derate factors may apply under atypical site conditions.
Please contact a Generac Power Systems Industrial Dealer for additional details. All performance ratings in accordance with BS5514 and DIN6271 standards.

Standby - See Bulletin 0187500SSBCom
Prime - See Bulletin 0187510SSB

SG130 | 9.0 L | 130 kW

INDUSTRIAL SPARK-IGNITED GENERATOR SET

EPA Certified Stationary Emergency

DIMENSIONS AND WEIGHTS*

OPEN SET (Includes Exhaust Flex)	
L x W x H - in (mm)	110 (2,795) x 39.4 (1,000.2) x 54.3 (1,378)
Weight - lbs	2,674 (1,213)
STANDARD ENCLOSURE	
L x W x H - in (mm)	132.72 (3,371.1) x 40.46 (1,027.8) x 64.05 (1,627)
Weight - lbs	Steel: 3,434 (1,558) Aluminum: 3,055 (1,386)
LEVEL 1 ACOUSTIC ENCLOSURE	
L x W x H - in (mm)	154.13 (3,914.9) x 40.46 (1,027.8) x 64.05 (1,627)
Weight - lbs	Steel: 3,670 (1,665) Aluminum: 3,157 (1,432)
LEVEL 2 ACOUSTIC ENCLOSURE	
L x W x H - in (mm)	144.53 (3,671) x 40.46 (1,027.8) x 80.88 (2,054.3)
Weight - lbs	Steel: 3,789 (1,719) Aluminum: 3,207 (1,455)

*All measurements are approximate and for estimation purposes only.

YOUR FACTORY RECOGNIZED GENERAC INDUSTRIAL DEALER

Specification characteristics may change without notice. Dimensions and weights are for preliminary purposes only. Please consult a Generac Power Systems Industrial Dealer for detailed installation drawings.

SPEC SHEET

©2025 Generac Power Systems, Inc. All rights reserved. All specifications are subject to change without notice.

Part No. 0
Rev. F 03/04/2025

SG130 | 9.0L | 130kW

INDUSTRIAL SPARK-IGNITED GENERATOR SET

EPA Certified Stationary Emergency

Standby Power Rating
130 kW, 163 kVA, 60 Hz

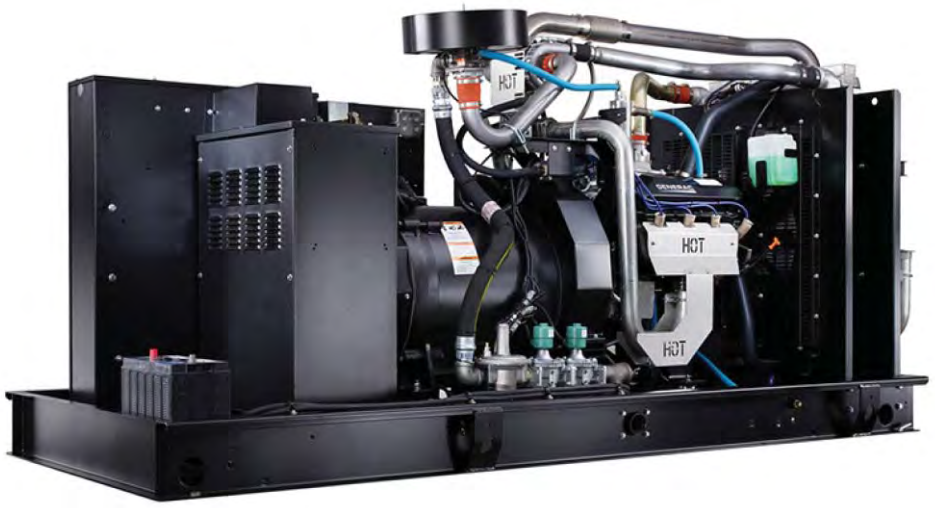

ISO 9001:2008

USA ENGINEERED & BUILT*

*Assembled in the USA using domestic and foreign parts

*EPA Certified Prime ratings are not available in the US or its Territories

Image used for illustration purposes only

CODES AND STANDARDS

Not all codes and standards apply to all configurations. Contact factory for details.

- UL2200, UL508, UL489
- CSA C22.2, B149
- BS5514 and DIN 6271
- SAE J1349
- NFPA 37, 70, 99, 110
- NEC 700, 701, 702, 708
- ISO 3046, 8528, 9001
- NEMA ICS1, ICS10, MG1, 250, ICS6, AB1
- ANSI/IEEE C62.41
- IBC 2009, CBC 2010, IBC 2012, ASCE 7-05, ASCE 7-10, ICC-ES AC-156 (2012)

POWERING AHEAD

Generac ensures superior quality by designing and manufacturing most of its generator components, such as alternators, enclosures, control systems and communications software. But Generac also makes its own spark-ignited engines, and you'll find them on every Generac gaseous-fueled generator. We engineer and manufacture them from the block up - all at our facilities throughout Wisconsin. Because applying natural gas and LP-fueled engines to generators requires advanced engineering expertise to ensure reliability, durability and necessary performance. By designing specifically for these dry, hotter-burning fuels, the engines last longer and require less maintenance. Building our own engines also means we control every step of the supply chain and delivery process, so you benefit from single-source responsibility.

Plus, Generac Industrial Power's distribution network provides all parts and service so you don't have to deal with third-party suppliers. It all leads to a positive owner experience and higher confidence level. Generac spark-ignited engines give you more options in commercial and industrial generator applications as well as extended run time from utility-supplied natural gas.

SG130 | 9.0L | 130kW

INDUSTRIAL SPARK-IGNITED GENERATOR SET

EPA Certified Stationary Emergency

STANDARD FEATURES

ENGINE SYSTEM

- Oil Drain Extension
- Air Cleaner
- Fan Guard
- Stainless Steel Flexible Exhaust Connection
- Factory Filled Oil & Coolant
- Radiator Duct Adapter (Open Set Only)
- Critical Exhaust Silencer/Catalyst

Fuel System

- NPT Fuel Connection on Frame
- Primary and Secondary Fuel Shutoff

Cooling System

- Closed Coolant Recovery System
- Factory-Installed Radiator
- 50/50 Ethylene Glycol Antifreeze
- Radiator Drain Extension
- UV/Ozone Resistant Hoses

Electrical System

- Battery Charging Alternator
- Battery Cables
- Battery Tray
- Rubber-Booted Engine Electrical Connections
- Solenoid Activated Starter Motor

ALTERNATOR SYSTEM

- UL220 GENprotect™ Fault Protector
- Class H Insulation Material
- 2/3 Pitch
- Skewed Stator
- Brushless Excitation
- Sealed Bearings
- Amortisseur Winding
- Low Temperature Rise ≤120°C

GENERATOR SET

- Internal Genset Vibration Isolation
- Separation of Circuits - High/Low Voltage
- Separation of Circuits - Multiple Breakers
- Wrapped Exhaust Piping (Enclosed Units Only)
- Standard Factory Testing
- 2 Year Limited Warranty (Standby Rated Units)
- Capable to Accept Full Load in <10 Seconds
- Silencer Mounted in the Discharge Hood (Enclosed Units Only)

ENCLOSURE (If Selected)

- Rust-Proof Fasteners with Nylon Washers to Protect Finish
- High Performance Sound-Absorbing Material (Sound Attenuation Enclosures)
- Gasketed Doors
- Stamped Air-Intake Louvers
- Upward Facing Discharge Hoods (Radiator and Exhaust)
- Stainless Steel Lockable Handles
- RhinoCoat™ - Textured Polyester Powder Coat Paint

CONTROL SYSTEM

Digital H Control Panel- Dual 4x20 Display

Program Functions

- Programmable Crank Limiter
- 7-Day Programmable Exerciser
- Special Applications Programmable Logic Controller
- RS-232/485 Communications
- All-Phase Sensing Digital Voltage Regulator
- Utility Monitoring
- 2-Wire Start Capability
- Date/Time Fault History (Event Log)
- Isochronous Governor Control
- Waterproof/Sealed Connectors
- Audible Alarms and Shutdowns
- Not in Auto (Flashing Light)
- Auto/Off/Manual Switch
- E-Stop (Red Mushroom-Type)
- NFPA110 Level I and II (Programmable)
- Customizable Alarms, Warnings, and Events
- Modbus® Protocol
- Predictive Maintenance Algorithm
- Sealed Boards
- Password Parameter Adjustment Protection
- Single Point Ground
- 16 Channel Remote Trending
- 0.2msec High Speed Remote Trending
- Alarm Information Automatically Annunciated on the Display

Full System Status Display

- Power Output (kW)
- Power Factor
- kW Hours, Total & Last Run
- Real/Reactive/Apparent Power
- All Phase AC Voltage
- All Phase Currents
- Oil Pressure
- Coolant Temperature
- Coolant Level
- Engine Speed
- Battery Voltage
- Frequency

Alarms and Warnings

- Oil Pressure
- Coolant Temperature
- Coolant Level
- Low Fuel Pressure
- Engine Overspeed
- Battery Voltage
- Alarms & Warnings Time and Date Stamped
- Snap Shots of Key Operation Parameters During
- Alarms & Warnings
- Alarms and Warnings Spelled Out (No Alarm Codes)

SG130 | 9.0L | 130kW

INDUSTRIAL SPARK-IGNITED GENERATOR SET

EPA Certified Stationary Emergency

CONFIGURABLE OPTIONS

ENGINE SYSTEM

- Engine Block Heater
- Extreme Cold Weather Kit
- Oil Heater
- Air Filter Restriction Indicator
- Radiator Stone Guard (Open Set Only)

ELECTRICAL SYSTEM

- 10A UL Battery Charger
- Battery Warmer

FUEL SYSTEM

- NPT Flexible Fuel Line

ALTERNATOR SYSTEM

- Alternator Upsizing
- Anti-Condensation Heater
- Topical Alternator Coating

GENERATOR SET

- GenLink Communications Software (English Only)
- Extended Factory Testing (3-Phase Only)
- 8 Position Load Center
- Seismic Certification

MAIN LINE CIRCUIT BREAKER OPTIONS

- 2nd Main Line Circuit Breaker
- Shunt Trip and Auxiliary Contact
- Electronic Trip Breakers

CONTROL SYSTEM

- NFPA 110 Level 1 Compliant 21-Light Remote Annunciator
- Remote Output Relays (8 or 16)
- Oil Temperature Indication and Alarm
- Remote E-Stop (Break Glass-Type, Surface Mount)
- Remote E-Stop (Red Mushroom-Type, Surface Mount)
- Remote E-Stop (Red Mushroom-Type, Flush Mount)
- 10A Engine Run Relay
- Ground Fault Annunciator
- Damper Alarm Contacts
- 100dB Alarm Horn
- 120V GFCI and 240V Outlets
- Auxiliary Circuit Breaker Contacts to Controller

ENCLOSURE

- Weather Protected Enclosure
- Level 1 Sound Attenuation
- Level 2 Sound Attenuation
- Level 2 Sound Attenuation with Motorized Dampers
- Steel Enclosure
- Aluminum Enclosure
- AC/DC Enclosure Lighting Kit
- Door Alarm Switch
- Enclosure Ambient Heaters
- Up to 200 MPH Wind Load Rating (Consult Factory for Availability)

WARRANTY (Standby Gensets Only)

- 2 Year Extended Limited Warranty
- 5 Year Limited Warranty
- 5 Year Extended Limited Warranty
- 7 Year Extended Limited Warranty
- 10 Year Extended Limited Warranty

ENGINEERED OPTIONS

CONTROL SYSTEM

- Battery Disconnect Switch

ALTERNATOR SYSTEM

- 3rd Main Line Circuit Breaker
- Unit Mounted Load Banks

GENERATOR SET

- Special Testing
- Battery Box

SG130 | 9.0L | 130kW

INDUSTRIAL SPARK-IGNITED GENERATOR SET

EPA Certified Stationary Emergency

APPLICATION AND ENGINEERING DATA

ENGINE SPECIFICATIONS

General

Make	Generac	
Cylinder #	8	
Type	V	
Displacement - in³ (L)	540 (8.9)	
Bore - in (mm)	4.49 (114.23)	
Stroke - in (mm)	4.25 (107.15)	
Compression Ratio	10.5:1 - G18	9.1:1 - G26
Intake Air Method	Turbocharged/Aftercooled	
Number of Main Bearings	5	
Cylinder Head	Forged Steel	
Ignition	High Energy	
Piston Type	Aluminum Alloy	
Crankshaft Type	Forged Steel	
Lifter Type	Hydraulic Roller	
Intake Valve Material	Steel Alloy	
Exhaust Valve Material	Stainless Steel	
Hardened Valve Seats	Yes	

Engine Governing

Governor	Electronic
Frequency Regulation (Steady State)	±0.25%

Lubrication System

Oil Pump Type	Gear	
Oil Filter Type	Full-Flow Spin-On Cartridge	
Crankcase Capacity with Filters - L (qts)	8.5 (8.0) - G18	9.5 (10.0) - G26

Cooling System

Cooling System Type	Pressurized Closed
Fan Type	Pusher
Fan Speed (rpm)	2,330
Fan Diameter - in (mm)	22 (558)

Fuel System

Fuel Type	Natural Gas
Carburetor	Down Draft
Secondary Fuel Regulator	Standard
Fuel Shut Off Solenoid	Standard
Operating Fuel Pressure NG/LPV- H_2O (kPa)	7-11 (1.7- 2.7)
Operating Fuel Pressure LPL- psi (kPa)	30 - 312 (206 - 2,151)

Engine Electrical System

System Voltage	12 VDC
Battery Charger Alternator	Standard
Battery Size	See Battery Index 0161970SBY
Battery Voltage	12 VDC
Ground Polarity	Negative

NOTE: G18 is all engines manufactured before August 3rd, 2018 . G26 is all engines manufactured after August 3rd, 2018.

ALTERNATOR SPECIFICATIONS

Standard Model	K0130124Y21
Poles	4
Field Type	Rotating
Insulation Class - Rotor	H
Insulation Class - Stator	H
Total Harmonic Distortion	<5% (3-Phase Only)
Telephone Interference Factor (TIF)	<50

Standard Excitation	Brushless Excitation
Bearings	Single Sealed
Coupling	Direct via Flexible Disc
Prototype Short Circuit Test	Yes
Voltage Regulator Type	Full Digital
Regulation Accuracy (Steady State)	±0.25%

SG130 | 9.0L | 130kW

INDUSTRIAL SPARK-IGNITED GENERATOR SET

EPA Certified Stationary Emergency

OPERATING DATA

POWER RATINGS- NATURAL GAS/PROPANE/DUAL FUEL

		Standby
Single-Phase 120/240VAC @1.0pf	130 kW	Amps: 542
Three-Phase 120/208 VAC @0.8pf	130 kW	Amps: 451
Three-Phase 120/240 VAC @0.8pf	130 kW	Amps: 391
Three-Phase 277/480 VAC @0.8pf	130 kW	Amps: 196
Three-Phase 346/600 VAC @0.8pf	130 kW	Amps: 156

MOTOR STARTING CAPABILITIES (skVA)

skVA vs. Voltage Dip

277/480 VAC	30%	208/480 VAC	30%
K0130124Y21	327	K0130124Y21	327
K0150124Y21	326	K0150124Y21	244
K0200124Y21	478	K0200124Y21	361

FUEL CONSUMPTION RATES

Natural Gas – cfh (m^3/hr)		Propane Vapor - cfh (m^3/hr)		Propane Liquid- gal/hr (l/hr)	
Percent Load	Standby	Percent Load	Standby	Percent Load	Standby
25%	635 (18.0)	25%	270 (7.6)	25%	6.5 (24.6)
50%	1,005 (28.4)	50%	390 (11.0)	50%	10.1 (38.2)
75%	1,401 (39.7)	75%	516 (14.6)	75%	14.0 (52.9)
100%	1,797 (50.9)	100%	642 (18.2)	100%	17.7 (67.0)

* Fuel supply installation must accommodate fuel consumption rates at 100% load.

COOLING

		Standby
Air Flow (Fan Air Flow Across Radiator)	scfm (m^3/min)	5,415 (153.3)
Coolant Flow	gpm (Lpm)	27.5 (104)
Coolant System Capacity	Gal (L)	6.34 (24.0)
Max. Operating Ambient Temperature	°F (°C)	122 (50)
Maximum Operating Ambient Temperature (Before Derate)	See Bulletin No. 0199270SSD	
Maximum Radiator Backpressure	in H_2O (kPa)	0.50 (0.12)

COMBUSTION AIR REQUIREMENTS

	Standby
Flow at Rated Power scfm (m^3/min)	370.9 (10.5)

ENGINE

		Standby	
Rated Engine Speed	rpm	1,800	
Horsepower at Rated kW**	hp	200- G18	205- G26
Piston Speed	ft/min (m/min)	1,275 (389)	
BMEP	psi (kPa)	166 (1145)	

EXHAUST

		Standby
Exhaust Flow (Rated Output)	scfm (m^3/min)	1,198 (34)
Max. Backpressure (Post Silencer)	inHg (kPa)	0.75 (2.54)
Exhaust Temp (Rated Output - Post Silencer)	°F (°C)	1,285 (696)

** Refer to "Emissions Data Sheet" for maximum bHP for EPA and SCAQMD permitting purposes.
Deration – Operational characteristics consider maximum ambient conditions. Derate factors may apply under atypical site conditions.
Please consult a Generac Power Systems Dealer for additional details. All performance ratings in accordance with ISO3046, BS5514, ISO8528 and DIN6271 standards.
Standby - See Bulletin - 1000001893

SG130 | 9.0L | 130kW

INDUSTRIAL SPARK-IGNITED GENERATOR SET

EPA Certified Stationary Emergency

DIMENSIONS AND WEIGHTS*†

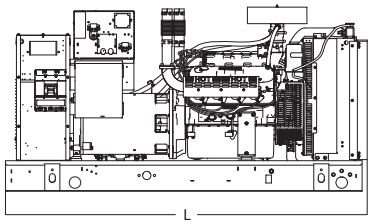

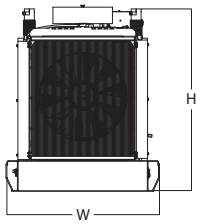

OPEN SET (Includes Exhaust Flex)

L x W x H - in (mm)	110.0 (2,795) x 39.9 (1,013) x 54.3 (1,379)
Weight - lbs (kg)	2,674 (1,213)

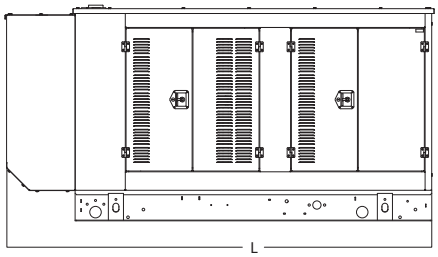

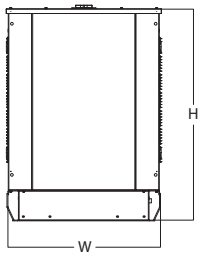

WEATHER PROTECTED ENCLOSURE

L x W x H - in (mm)	132.7 (3,371) x 40.5 (1,028) x 63.1 (1,604)
Weight - lbs (kg)	Steel: 3,435 (1,558) Aluminum: 3,056 (1,386)

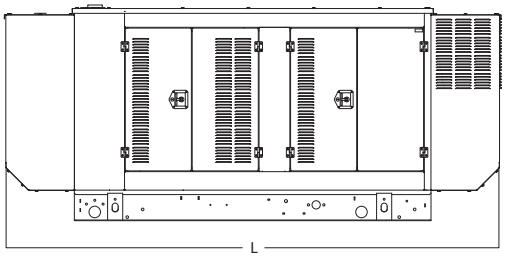

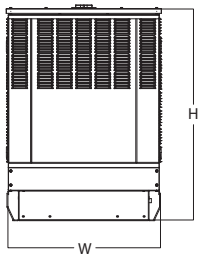

LEVEL 1 ACOUSTIC ENCLOSURE

L x W x H - in (mm)	154.1 (3,915) x 40.5 (1,028) x 63.1 (1,604)
Weight - lbs (kg)	Steel: 3,671 (1,665) Aluminum: 3,157 (1,432)

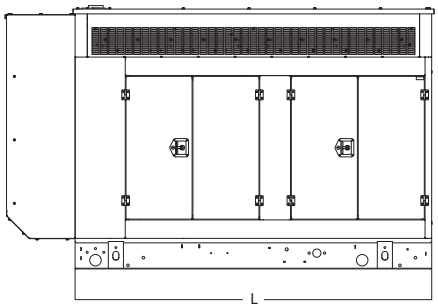

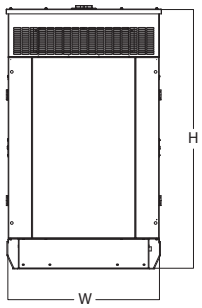

LEVEL 2 ACOUSTIC ENCLOSURE

L x W x H - in (mm)	144.5 (3,670) x 40.5 (1,028) x 80.0 (2,031)
Weight - lbs (kg)	Steel: 3,790 (1,719) Aluminum: 3,208 (1,455)

* All measurements are approximate and for estimation purposes only.
† Dimensions based on unit with the Standard Model Alternator

YOUR FACTORY RECOGNIZED GENERAC INDUSTRIAL DEALER

Specification characteristics may change without notice. Please consult a Generac Power Systems Industrial Dealer for detailed installation drawings.

SPEC SHEET

Generac Power Systems, Inc. | P.O. Box 8 | Waukesha, WI 53189
P: (262) 544-4811 ©2018 Generac Power Systems, Inc. All rights reserved. All specifications are subject to change without notice.

Part No 0[illegible]
Rev. I 06/25/18

SG150 | 9.0 L | 150 kW

INDUSTRIAL SPARK-IGNITED GENERATOR SET

EPA Certified Stationary Emergency

Standby Power Rating

150 kW, 188 kVA, 60 Hz

*Assembled in the USA using domestic and foreign parts

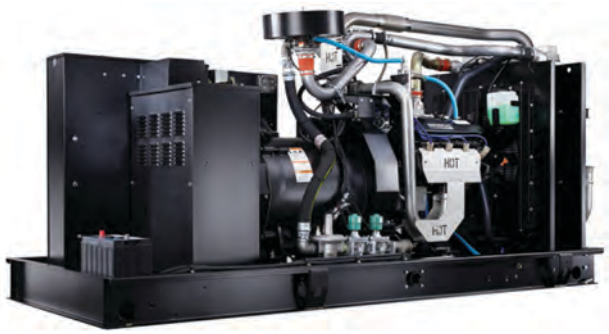

Image used for illustration purposes only

Codes and Standards

Generac products are designed to the following standards:.

UL2200, UL508, UL489

CSA C22.2

BS5514 and DIN 6271

SAE J1349

NFPA 37, 70, 99, 110

NEC700, 701, 702, 708

NEMA ICS10, MG1, 250, ICS6, AB1

ANSI C62.41

IBC 2009, CBC 2010, IBC 2012, ASCE 7-05, ASCE 7-10, ICC-ES AC-156 (2012)

Powering Ahead

Generac provides superior quality by designing and manufacturing most of its generator components, such as alternators, enclosures, control systems and communications software. Generac also makes its own spark-ignited engines, and you'll find them on every Generac gaseous-fueled generator. We engineer and manufacture them from the block up — all at our facilities throughout Wisconsin. Applying natural gas and LP-fueled engines to generators requires advanced engineering expertise for reliability, durability and necessary performance. By designing specifically for these dry, hotter-burning fuels, the engines last longer and require less maintenance. Building our own engines also means we control every step of the supply chain and delivery process, so you benefit from single-source responsibility.

Plus, Generac Industrial Power's distribution network provides all parts and service so you don't have to deal with third-party suppliers. It all leads to a positive owner experience and higher confidence level. Generac spark-ignited engines give you more options in commercial and industrial generator applications as well as extended run time from utility-supplied natural gas.

SG150 | 9.0 L | 150 kW

INDUSTRIAL SPARK-IGNITED GENERATOR SET

EPA Certified Stationary Emergency

STANDARD FEATURES

ENGINE SYSTEM
- Oil Drain Extension
- Air Cleaner
- Fan Guard
- Stainless Steel Flexible Exhaust Connection
- Factory Filled Oil and Coolant
- Radiator Duct Adapter (Open Set Only)
- Critical Silencer/Catalyst

FUEL SYSTEM
- NPT Fuel Connection on Frame
- Primary and Secondary Fuel Shutoff

COOLING SYSTEM
- Closed Coolant Recovery System
- UV/Ozone Resistant Hoses
- Factory-Installed Radiator
- 50/50 Ethylene Glycol Antifreeze
- Radiator Drain Extension

ELECTRICAL SYSTEM
- Battery Charging Alternator
- Battery Cables
- Battery Tray
- Rubber-Booted Engine Electrical Connections
- Solenoid Activated Starter Motor

ALTERNATOR SYSTEM
- UL2200 GENprotect™
- Class H Insulation Material
- 2/3 Pitch
- Skewed Stator
- Permanent Magnet Excitation
- Sealed Bearings
- Amortisseur Winding
- Full Load Capacity Alternator

GENERATOR SET
- Internal Genset Vibration Isolation
- Separation of Circuits - High/Low Voltage
- Separation of Circuits - Multiple Breakers
- Wrapped Exhaust Piping
- Standard Factory Testing
- 2 Year Limited Warranty (Standby Rated Units)
- Silencer Mounted in the Discharge Hood (Enclosed Only)

ENCLOSURE (If Selected)
- Rust-Proof Fasteners with Nylon Washers to Protect Finish
- High Performance Sound-Absorbing Material (Sound Attenuation Enclosures)
- Gasketed Doors
- Stamped Air-Intake Louvers
- Upward Facing Discharge Hoods (Radiator and Exhaust)
- Stainless Steel Lift Off Door Hinges
- Stainless Steel Lockable Handles
- RhinoCoat™ - Textured Polyester Powder Coat Paint

CONTROL SYSTEM

Digital H Control Panel- Dual 4x20 Display

Program Functions
- Programmable Crank Limiter
- 7-Day Programmable Exerciser
- Special Applications Programmable Logic Controller
- RS-232/485 Communications
- 3 Phase Sensing Digital Voltage Regulator
- 2-Wire Start Capability
- Date/Time Fault History (Event Log)
- Isochronous Governor Control
- Waterproof/Sealed Connectors
- Audible Alarms and Shutdowns
- Not in Auto (Flashing Light)
- Auto Off/Manual Switch
- E-Stop (Red Mushroom-Type)
- NFPA110 Level I and II (Programmable)
- Customizable Alarms, Warnings, and Events
- Modbus® Protocol
- Predictive Maintenance Algorithm
- Sealed Boards
- Password Parameter Adjustment Protection
- Single Point Ground
- 16 Channel Remote Trending
- 0.2 msec High Speed Remote Trending
- Alarm Information Automatically Annunciated on the Display

Full System Status Display
- Power Output (kW)
- Power Factor
- kW Hours, Total, and Last Run
- Real/Reactive/Apparent Power
- All Phase AC Voltage
- All Phase Currents
- Oil Pressure
- Coolant Temperature
- Coolant Level
- Engine Speed
- Battery Voltage
- Frequency

Alarms and Warnings
- Oil Pressure
- Coolant Temperature
- Coolant Level
- Engine Overspeed
- Battery Voltage
- Alarms and Warnings Time and Date Stamped
- Snap Shots of Key Operation Parameters During Alarms and Warnings
- Alarms and Warnings Spelled Out (No Alarm Codes)

PARALLELING CONTROLS
- Auto-Synchronization Process
- Isochronous Load Sharing
- Reverse Power Protection
- Maximum Power Protection
- Electrically Operated, Mechanically Held Paralleling Switch
- Sync Check System
- Independent On-Board Paralleling
- Optional Programmable Logic Full Auto Back-Up Controls (PLS)
- Shunt Trip and Auxiliary Contact

SG150 | 9.0 L | 150 kW

INDUSTRIAL SPARK-IGNITED GENERATOR SET

EPA Certified Stationary Emergency

CONFIGURABLE OPTIONS

ENGINE SYSTEM
- Engine Block Heater
- Oil Heater
- Air Filter Restriction Indicator
- Radiator Stone Guard (Open Set Only)
- Baseframe Cover/Rodent Guard
- Level 1 Fan and Belt Guards (Enclosed Units Only)
- Shipped Loose Critical Silencer (Open Set Only)

FUEL SYSTEM
- NPT Flexible Fuel Line
- Dual Fuel NG/LPV
- Dual Fuel NG/LPL

ELECTRICAL SYSTEM
- 10A UL Battery Charger
- Battery Warmer

ALTERNATOR SYSTEM
- Alternator Upsizing
- Anti-Condensation Heater
- Tropical Coating

CIRCUIT BREAKER OPTIONS
- Main Line Circuit Breaker
- 2nd main Line Circuit Breaker
- Shunt Trip and Auxiliary Contact
- Electronic Trip Breakers

GENERATOR SET
- Demand Response Rating
- Extended Factory Testing (3 Phase Only)
- IBC Seismic Certification
- 8 Position Load Center

ENCLOSURE
- Weather Protected Enclosure
- Level 1 Sound Attenuated
- Level 2 Sound Attenuated
- Level 2 Sound Attenuated with Motorized Dampers
- Steel Enclosure
- Aluminum Enclosure
- AC/DC Enclosure Lighting Kit
- Enclosure Heater
- Pad Vibration Isolation
- Up to 200 MPH Wind Load Rating (Contact Factory for Availability)
- Door Open Alarm Switch

CONTROL SYSTEM
- NFPA 110 Compliant Level 1 21-Light Remote Annunciator
- Remote Relay Assembly (8 or 16)
- Oil Temperature Indication and Alarm
- Remote E-Stop (Break Glass-Type, Surface Mount)
- Remote E-Stop (Red Mushroom-Type, Surface Mount)
- Remote E-Stop (Red Mushroom-Type, Flush Mount)
- 10A Engine Run Relay
- Ground Fault Annunciator
- 100 dB Alarm Horn
- 120V GFCI and 240V Outlets
- Damper Alarm Contacts (Motorized Dampers Only)
- Auxiliary Circuit Breaker Contacts to Controller

WARRANTY (Standby Gensets Only)
- 2 Year Extended Limited Warranty
- 5 Year Extended Limited Warranty
- 7 Year Extended Limited Warranty
- 10 Year Extended Limited Warranty

ENGINEERED OPTIONS

ENGINE SYSTEM
- Coolant Heater Ball Valves
- Fluid Containment Pan

ATLERNATOR SYSTEM
- 3rd Breaker System

CONTROL SYSTEM
- Battery Disconnect Switch

GENERATOR SET
- Special Testing
- Battery Box

SG150 | 9.0 L | 150 kW

INDUSTRIAL SPARK-IGNITED GENERATOR SET

EPA Certified Stationary Emergency

GENERAC INDUSTRIAL ENERGY

APPLICATION AND ENGINEERING DATA

ENGINE SPECIFICATIONS

General

Make	Generac
Cylinder #	8
Type	V
Displacement - in³ (L)	543 (8.9)
Bore - in (mm)	4.49 (114.3)
Stroke - in (mm)	4.25 (108)
Compression Ratio	G18 - 10.5:1 / G26 - 9.1:1 *
Intake Air Method	Turbocharged/Aftercooled
Number of Main Bearings	5
Connecting Rods	Forged Steel
Cylinder Head	Cast Iron
Cylinder Liners	No
Ignition	High Energy
Piston Type	Aluminum Alloy
Crankshaft Type	Forged Steel
Lifter Type	Hydraulic Roller
Intake Valve Material	Steel Alloy
Exhaust Valve Material	Stainless Steel
Hardened Valve Seats	Yes

Engine Governing

Governor	Electronic
Frequency Regulation (Steady State)	±0.25%

Lubrication System

Oil Pump Type	Gear Driven
Oil Filter Type	Full-Flow Spin-On Cartridge
Crankcase Capacity: qt (L)	G18 - 8.5 (8.0) / G26 - 9.5 (10.0) *

Cooling System

Cooling System Type	Pressurized Closed
Fan Type	Pusher
Fan Speed (RPM)	G18 - 2,330 / G26 - 2,386 *
Fan Diameter - in (mm)	22 (559)

Fuel System

Fuel Type	Natural Gas, Propane Vapor/ Liquid
Carburetor	Down Draft
Secondary Fuel Regulator	Standard
Fuel Shut Off Solenoid	Standard
Operating Fuel Pressure - in H_2O	7 - 11 (1.7 - 2.7)
Optional Operating Fuel Pressure (LPL) — psi (KPa)	30 - 312 (206 - 2,151)

*When designing the external fuel system, assume a 20% safety factor to the upper and lower limit of the specified fuel pressure range to account for site variation and measurement at the generator test port. Refer to Generac 10000046207, latest rev, for proper gas supply guidelines (Contact Factory for Details).

Engine Electrical System

System Voltage	12 VDC
Battery Charger Alternator	Standard
Battery Size	See Battery Index 0161970SBY
Battery Voltage	12 VDC
Ground Polarity	Negative

* G18 refers to all engines manufactured before August 3rd, 2018. G26 refers to all engines manufactured after August 3rd, 2018.

ALTERNATOR SPECIFICATIONS

Standard Model	K0150124Y26
Poles	4
Field Type	Revolving
Insulation Class - Rotor	H
Insulation Class - Stator	H
Total Harmonic Distortion	<5%
Telephone Interference Factor (TIF)	<50
Standard Excitation	Permanent Magnet
Bearings	Single Sealed Ball
Coupling	Direct Drive
Prototype Short Circuit Test	Yes
Voltage Regulator Type	Full Digital
Number of Sensed Phases	All
Regulation Accuracy (Steady State)	±0.25%

SG150 | 9.0 L | 150 kW

INDUSTRIAL SPARK-IGNITED GENERATOR SET

EPA Certified Stationary Emergency

GENERAC INDUSTRIAL ENERGY

OPERATING DATA

POWER RATINGS

	G18, G26 - Natural Gas *		G18, G26 - Propane/Dual Fuel *	
Single-Phase 120/240 VAC @ 1.0pf	144 kW/144 kVA	Amps: 600	134 kW/134 KVA	Amps: 558
Three-Phase 120/208 VAC @0.8pf	150 kW/188 kVA	Amps: 521	140 kW/175 kVA	Amps: 486
Three-Phase 120/240 VAC @0.8pf	150 kW/188 kVA	Amps: 452	140 kW/175 kVA	Amps: 422
Three-Phase 277/480 VAC @0.8pf	150 kW/188 kVA	Amps: 226	140 kW/175 kVA	Amps: 211
Three-Phase 346/600 VAC @0.8pf	150 kW/188 kVA	Amps: 181	140 kW/175 kVA	Amps: 169

MOTOR STARTING CAPABILITIES (skVA)

skVA vs. Voltage Dip

277/480 VAC	30%	208/240 VAC	30%
K0150124Y26	327	K0150124Y26	250
K0200124Y21	478	K0200124Y21	361

FUEL CONSUMPTION RATES*

Natural Gas – scfh (m^3/hr)		Propane Vapor – scfh (m^3/hr)		Propane Liquid – gal/hr (Lph)	
Percent Load	Standby	Percent Load	Standby	Percent Load	Standby
25%	668 (18.9)	25%	280 (7.9)	25%	6.7 (25.4)
50%	1,127 (31.9)	50%	430 (12.2)	50%	11.4 (43.2)
75%	1,583 (44.8)	75%	573 (16.2)	75%	15.7 (59.4)
100%	2,042 (57.8)	100%	720 (20.4)	100%	20.0 (75.7)

*1.5X maximum site rated fuel consumption should be used for gas supply design practices. Refer to Generac 10000046207, latest rev., for more information or contact factory for details.

COOLING

		Standby
Air Flow (Fan Air Flow Across Radiator)	cfm (m^3/min)	5,598 (158.5)
Coolant Flow	gpm (Lpm)	27.5 (104)
Coolant System Capacity	gal (L)	6.3 (24.0)
Maximum Operating Air Temperature on Radiator	°F (°C)	122 (50)
Maximum Operating Ambient Temperature (Before Derate)	See Bulletin 0199270SSD	
Maximum Radiator Backpressure	in H_2O (kPa)	0.5 (0.12)

COMBUSTION AIR REQUIREMENTS

	Standby
Flow at Rated Power cfm — (m^3/min)	343 (9.7)

ENGINE

		Standby
Rated Engine Speed	RPM	1,800
Horsepower at Rated kW**	hp	229
Piston Speed	ft/min (m/min)	1,275 (389)
BMEP	psi (kPa)	185 (1,277)

** Refer to “Emissions Data Sheet” for maximum bHP for EPA and SCAQMD permitting purposes.

EXHAUST

		Standby
Exhaust Flow (Rated Output)	cfm (m^3/min)	1,206 (34.1)
Maximum Exhaust Backpressure	inHG (kPa)	0.75 (2.54)
Exhaust Temp (Rated Output - Post Silencer)	°F (°C)	1,440 (782)

Deration – Operational characteristics consider maximum ambient conditions. Derate factors may apply under atypical site conditions.

Please contact a Generac Power Systems Industrial Dealer for additional details. All performance ratings in accordance with BS5514 and DIN6271 standards.

Standby - See Bulletin 0187500SSB

SG150 | 9.0 L | 150 kW

INDUSTRIAL SPARK-IGNITED GENERATOR SET

EPA Certified Stationary Emergency

DIMENSIONS AND WEIGHTS*

OPEN SET (Includes Exhaust Flex)	
L x W x H - in (mm)	116.5 (2,959) x 49.7 (1,262) x 55.6 (1,412)
Weight - lbs	2,946 (1,336)
WEATHER PROTECTED ENCLOSURE	
L x W x H - in (mm)	143.0 (3,631) x 50.4 (1,280) x 68.2 (1,732
Weight - lbs	Steel: 3,843 (1,743) Aluminum: 3,384 (1,535)
LEVEL 1 ACOUSTIC ENCLOSURE	
L x W x H - in (mm)	143.0 (3,632) x 50.4 (1,280) x 91.7 (2,329)
Weight - lbs	Steel: 4,321 (1,960) Aluminum: 3,592 (1,629)
LEVEL 2 ACOUSTIC ENCLOSURE	
L x W x H - in (mm)	144.53 (3,671) x 40.46 (1,027.8) x 80.88 (2,054.3)
Weight - lbs	Steel: 3,789 (1,719) Aluminum: 3,207 (1,455)

*All measurements are approximate and for estimation purposes only.

YOUR FACTORY RECOGNIZED GENERAC INDUSTRIAL DEALER

Specification characteristics may change without notice. Dimensions and weights are for preliminary purposes only. Please consult a Generac Power Systems Industrial Dealer for detailed installation drawings.

SPEC SHEET

Generac Power Systems, Inc. | S45 W29290 HWY. 59 | Waukesha, WI 53189 | generac.com
©2025 Generac Power Systems, Inc. All rights reserved. All specifications are subject to change without notice.
Part No. 0
Rev. M 04/01/2025

SG200 | 14.2L | 200 kW

INDUSTRIAL SPARK-IGNITED GENERATOR SET

EPA Certified Stationary Emergency and Non-Emergency

DEMAND RESPONSE READY

Standby Power Rating
200 kW, 250 kVA, 60 Hz

Demand Response Rating
200 kW, 250 kVA, 60 Hz

Prime Power Rating
180 kW, 225 kVA, 60 Hz

*Assembled in the USA using domestic and foreign parts

** Offered on units sold in the U.S. and Canada

Image used for illustration purposes only

Codes and Standards

Not all codes and standards apply to all configurations. Contact factory for details.

UL2200, UL6200, UL1236, UL489

CSA C22.2, B149

BS5514 and DIN 6271

SAE J1349

NFPA 37, 70, 99, 110

NEC700, 701, 702, 708

NEMA ICS10, MG1, 250, ICS6, AB1

ANSI C62.41

IBC 2009, CBC 2010, IBC 2012, ASCE 7-05, ASCE 7-10, ICC-ES AC-156 (2012)

Powering Ahead

Generac provides superior quality by designing and manufacturing most of its generator components, such as alternators, enclosures, control systems and communications software. Generac also makes its own spark-ignited engines, and they can be found on every Generac gaseous-fueled generator. We engineer and manufacture them from the block up — all at our facilities throughout Wisconsin. Applying natural gas and LP-fueled engines to generators requires advanced engineering expertise for reliability, durability and necessary performance. By designing specifically for these dry, hotter-burning fuels, the engines last longer and require less maintenance. Building our own engines also means we control every step of the supply chain and delivery process, so you benefit from single-source responsibility.

Plus, Generac Industrial Power's distribution network provides all parts and service so owners don't have to deal with third-party suppliers. It all leads to a positive owner experience and higher confidence level. Generac spark-ignited engines give more options in commercial and industrial generator applications as well as extended run time from utility-supplied natural gas.

SG200 | 14.2L | 200 kW

INDUSTRIAL SPARK-IGNITED GENERATOR SET

EPA Certified Stationary Emergency and Non-Emergency

STANDARD FEATURES

DEMAND RESPONSE READY

ENGINE SYSTEM
- Oil Drain Extension
- Air Cleaner
- Fan Guard (Open Sets Only)
- Stainless Steel Flexible Exhaust Connection
- Factory Filled Oil and Coolant
- Radiator Duct Adapter (Open Set Only)
- Critical Silencer (Enclosed Units Only)
- Oil Temperature Indication and Alarm

FUEL SYSTEM
- NPT Fuel Connection on Frame
- Primary and Secondary Fuel Shutoff

COOLING SYSTEM
- Closed Coolant Recovery System
- UV/Ozone Resistant Hoses
- Factory-Installed Radiator
- 50/50 Ethylene Glycol Antifreeze
- Radiator Drain Extension

ELECTRICAL SYSTEM
- Battery Charging Alternator
- Battery Cables
- Battery Tray
- Rubber-Booted Engine Electrical Connections
- Solenoid Activated Starter Motor

ENCLOSURE (If Selected)
- Rust-Proof Fasteners with Nylon Washers to Protect Finish
- High Performance Sound-Absorbing Material (Sound Attenuated Enclosures)
- Gasketed Doors
- Upward Facing Discharge Hood (Radiator and Exhaust)
- Stainless Steel Lift Off Door Hinges
- Stainless Steel Lockable Handles
- RhinoCoat™ - Textured Polyester Powder Coat Paint

GENERATOR SET
- Internal Genset Vibration Isolation
- Separation of Circuits - High/Low Voltage
- Separation of Circuits - Multiple Breakers
- Wrapped Exhaust Piping
- Standard Factory Testing
- 2 Year Limited Warranty (Standby and Demand Response Rated Units)
- 1 Year Limited Warranty (Prime Rated Units)
- Silencer Mounted in the Discharge Hood (Enclosed Units Only)
- Ready to Accept Full Load in <10 Seconds

ALTERNATOR SYSTEM
- UL2200 GENprotect™
- Main Line Circuit Breaker
- Class H Insulation Material
- 2/3 Pitch
- Skewed Stator
- Permanent Magnet Excitation
- Sealed Bearing
- Amortisseur Winding
- Full Load Capacity Alternator

CONTROL SYSTEM

Power Zone® Pro Sync Controller

Program Functions
- NFPA 110 Level 1 Compliant
- Engine Protective Functions
- Alternator Protective Functions
- Digital Engine Governor Control
- Digital Voltage Regulator
- Multiple Programmable Inputs and Outputs
- Remote Display Capability
- Remote Communication via Modbus® RTU, Modbus TCP/IP, and Ethernet 10/100
- Alarm and Event Logging with Real Time Stamping
- Expandable Analog and Digital Inputs and Outputs
- Remote Wireless Software Update Capable
- BMS and Remote Telemetry
- Built-In Programmable Logic Eliminates the Need for External Controllers Under Most Conditions
- Ethernet Based Communications Between Generators
- Programmable I/O Channel Properties
- Built-In Diagnostics
- Arc Flash Maintenance Mode (When Correctly Equipped)

Alarms and Warnings
- Low Oil Pressure
- Low Coolant Level
- High/Low Coolant Temperature
- Sensor Failure
- Oil Temperature
- Over/Under Speed
- Over/Under Voltage
- Over/Under Frequency
- Over/Under Current
- Over Load
- High/Low Battery Voltage
- Battery Charger Current
- Phase to Phase and Phase to Neutral Short Circuits (I^2T Algorithm)

7 Inch Color Touch Screen Display
- Resistive Color Touch Screen
- Sunlight Readable (1400 NITS)
- Easily Identifiable Icons
- Multi-Lingual
- On Screen Editable Parameters
- Key Function Monitoring
- Three Phase Voltage, Amperage, kW, kVA, and kVAr
- Selectable Line to Line or Line to Neutral Measurements
- Frequency
- Engine Speed
- Engine Coolant Temperature
- Engine Oil Pressure
- Engine Oil Temperature
- Battery Voltage
- Hourmeter
- Warning and Alarm Indication
- Diagnostics
- Maintenance Events/Information

SG200 | 14.2L | 200 kW

INDUSTRIAL SPARK-IGNITED GENERATOR SET

EPA Certified Stationary Emergency and Non-Emergency

CONFIGURABLE OPTIONS

DEMAND RESPONSE READY

ENGINE SYSTEM
- Engine Coolant Heater
- Baseframe Cover/Rodent Guard
- 2 Stage Air Cleaner
- Oil Heater
- Air Filter Restriction Indicator
- Radiator Stone Guard (Open Set Only)
- Level 1 Fan and Belt Guards (Enclosed Units Only)

FUEL SYSTEM
- NPT Flexible Fuel Line

ELECTRICAL SYSTEM
- 10A UL Listed Battery Charger
- Battery Warmer

ALTERNATOR SYSTEM
- Alternator Upsizing
- Anti-Condensation Heater
- Tropical Coating

CIRCUIT BREAKER OPTIONS
- Main Line Circuit Breaker
- 2nd Main Line Circuit Breaker
- 3rd Main Line Circuit Breaker
- Shunt Trip and Auxiliary Contact
- Electronic Trip Breakers

GENERATOR SET
- Demand Response Rating
- Extended Factory Testing (3-Phase Only)
- 12 Position Load Center
- Vapor Recovery Heater

ENCLOSURE
- Weather Protected Enclosure
- Level 1 Sound Attenuated
- Level 2 Sound Attenuated
- Level 2 Sound Attenuated with Motorized Dampers
- Level 3 Sound Attenuated (Steel Only)
- Steel Enclosure
- Aluminum Enclosure
- Up to 200 MPH Wind Load Rating (Contact Factory for Availability)
- AC/DC Enclosure Lighting Kit
- Enclosure Heaters (with Motorized Dampers Only)
- IBC Certification
- Door Open Alarm Switch

CONTROL SYSTEM
- NFPA 110 Level 1 Compliant 21-Light Remote Annunciator
- Remote Relay Assembly (8 or 16)
- Remote E-Stop (Break Glass-Type, Surface Mount)
- Remote E-Stop (Red Mushroom-Type, Surface Mount)
- Remote E-Stop (Red Mushroom-Type, Flush Mount)
- 10A Engine Run Relay
- Ground Fault Annunciator
- 100 dB Alarm Horn
- 120V GFCI and 240V Outlets
- Damper Alarm Contacts (with Motorized Dampers Only)

WARRANTY (Standby Gensets Only)
- 2 Year Extended Limited Warranty
- 5 Year Extended Limited Warranty
- 7 Year Extended Limited Warranty
- 10 Year Extended Limited Warranty

ENGINEERED OPTIONS

ENGINE SYSTEM
- Coolant Heater Ball Valves
- Fluid Containment Pans

CONTROL SYSTEM
- Battery Disconnect Switch

GENERATOR SET
- Special Testing
- Battery Box

CIRCUIT BREAKER OPTIONS
- 4th Main Line Circuit Breaker

SG200 | 14.2L | 200 kW

INDUSTRIAL SPARK-IGNITED GENERATOR SET

EPA Certified Stationary Emergency and Non-Emergency

APPLICATION AND ENGINEERING DATA

DEMAND RESPONSE READY

ENGINE SPECIFICATIONS

General

Make	Generac
Cylinder #	6
Type	In-line
Displacement - in^3 (L)	864.71 (14.2)
Bore: in (mm)	5.31 (135)
Stroke: in (mm)	6.50 (165)
Compression Ratio	9.5:1
Intake Air Method	Turbocharged/Aftercooled
Number of Main Bearings	7
Connecting Rods	Steel Alloy
Cylinder Head	Cast Iron
Cylinder Liners	Ductile Iron
Ignition	Electronic
Piston Type	Aluminum
Crankshaft Type	Ductile Iron
Lifter Type	Solid
Intake Valve Material	Special Heat-Resistant Steel
Exhaust Valve Material	High Temperature Steel Alloy
Hardened Valve Seats	High Temperature Steel Alloy

Engine Governing

Governor	Electronic
Frequency Regulation (Steady State)	±0.25%

Lubrication System

Oil Pump	Gear
Oil Filter Type	Full-Flow Cartridge
Engine Oil Capacity: qt (L)	36.2 (34.3)

Cooling System

Cooling System Type	Pressurized Closed Recovery
Fan Type	Pusher
Fan Speed (RPM)	1,894
Fan Diameter - in (mm)	30 (762)

Fuel System

Fuel Type	Natural Gas
Carburetor	Down Draft
Secondary Fuel Regulator	Standard
Fuel Shut Off Solenoid	Standard
Operating Fuel Pressure- in H_2O (kPa)	7 - 11 (1.7 - 2.7)

*When designing the external fuel system, assume a 20% safety factor to the upper and lower limit of the specified fuel pressure range to account for site variation and measurement at the generator test port. Refer to Generac document 10000046207, latest rev. for proper gas supply design guidelines. (Contact Factory for Details)

Engine Electrical System

System Voltage	24 VDC
Battery Charger Alternator	57.5 A
Battery Size	See Battery Index 0161970SBY
Battery Voltage	24 VDC
Ground Polarity	Negative (-)

ALTERNATOR SPECIFICATIONS

Standard Model	K0200124Y21
Poles	4
Field Type	Revolving
Insulation Class - Rotor	H
Insulation Class - Stator	H
Total Harmonic Distortion	<5% (3-Phase)
Telephone Interference Factor (TIF)	<50
Standard Excitation	Permanent magnet
Bearings	Sealed Ball
Coupling	Direct via Flexible Disc
Prototype Short Circuit Test	Yes
Voltage Regulator Type	Digital
Number of Sensed Phases	All
Regulation Accuracy (Steady State)	±0.25%

SG200 | 14.2L | 200 kW

INDUSTRIAL SPARK-IGNITED GENERATOR SET

EPA Certified Stationary Emergency and Non-Emergency

OPERATING DATA

DEMAND RESPONSE READY

POWER RATINGS - NATURAL GAS

	Standby/Demand Response		Prime	
Single-Phase 120/240 VAC @1.0pf	200 kW/200 kVA	Amps: 833	180 kW/180 kVA	Amps: 750
Three-Phase 120/208 VAC @0.8pf	200 kW/250 kVA	Amps: 695	180 kW/225 kVA	Amps: 625
Three-Phase 120/240 VAC @0.8pf	200 kW/250 kVA	Amps: 602	180 kW/225 kVA	Amps: 542
Three-Phase 277/480 VAC @0.8pf	200 kW/250 kVA	Amps: 301	180 kW/225 kVA	Amps: 271
Three-Phase 346/600 VAC @0.8pf	200 kW/250 kVA	Amps: 241	180 kW/225 kVA	Amps: 217

MOTOR STARTING CAPABILITIES (skVA)

skVA vs. Voltage Dip

277/480 VAC	30%	208/240 VAC	30%
K0200124Y21	478	K0200124Y21	361
K0250124Y21	630	K0250124Y21	506
K0300124Y21	790	K0300124Y21	609

FUEL CONSUMPTION RATES*

Natural Gas – scfh (m^3/hr)

Percent Load	Standby/Demand Response	Prime
25%	960 (27.2)	900 (25.5)
50%	1,440 (40.8)	1,320 (37.4)
75%	1,980 (56.1)	1,800 (51.0)
100%	2,460 (69.7)	2,280 (64.6)

*1.5X maximum site rated fuel consumption should be used for gas supply design practices. Refer to Generac 10000046207, latest rev., for more information or contact factory for details.

COOLING

		Standby/Demand Response	Prime
Air Flow (Fan Air Flow Across Radiator)	cfm (m^3/min)	9,162 (259.4)	9,162 (259.4)
Coolant Flow	gpm (Lpm)	90 (340.7)	90 (340.7)
Coolant System Capacity	gal (L)	11 (39.7)	11 (39.7)
Maximum Operating Ambient Temperature	°F (°C)	122 (50)	122 (50)
Maximum Operating Ambient Temperature (Before Derate)		See Bulletin No. 0199270SSD	See Bulletin No. 0199270SSD
Maximum Additional Radiator Backpressure	in H_2O (kPa)	0.5 (0.12)	0.5 (0.12)

COMBUSTION AIR REQUIREMENTS

	Standby/Demand Response	Prime
Flow at rated power cfm - (m^3 /min)	390 (11.0)	362 (10.3)

ENGINE

		Standby/ Demand Response	Prime
Rated Engine Speed	RPM	1,800	1,800
Horsepower at Rated kW**	hp	304	274
Piston Speed	ft/min (m/min)	1,950 (594)	1,950 (594)
BMEP	psi (kPa)	155 (1,065)	139 (959)

** See “Emissions Data Sheet” for maximum bHP for EPA and SCAQMD permitting purposes.

EXHAUST

		Standby/ Demand Response	Prime
Exhaust Flow (Rated Output)	cfm (m^3/min)	1,327 (38)	1,213 (34)
Max. Backpressure (Post Silencer)	inHg (kPa)	0.75 (2.54)	0.75 (2.54)
Exhaust Temp (Rated Output - Post Silencer)	°F (°C)	1,378 (748)	1,350 (732)

Deration – Operational characteristics consider maximum ambient conditions. Derate factors may apply under atypical site conditions.
Please contact a Generac Power Systems Industrial Dealer for additional details. All performance ratings in accordance with BS5514 and DIN6271 standards.
Standby - See Bulletin 0187500SSB • Demand Response - See Bulletin 10000018250 • Prime - See Bulletin 0187510SSB

SG200 | 14.2L | 200 kW

INDUSTRIAL SPARK-IGNITED GENERATOR SET

EPA Certified Stationary Emergency and Non-Emergency

DIMENSIONS AND WEIGHTS*

DEMAND RESPONSE READY

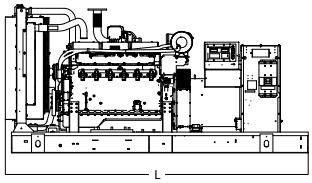

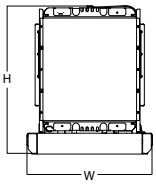

OPEN SET (Includes Exhaust Flex)	
L x W x H - in (mm)	128.0 (3,251) x 52.9 (1,344) x 62.3 (1,582)
Weight lbs (kg)	5,281 - 6,031 (2,395 - 2,735)

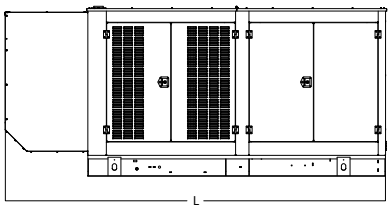

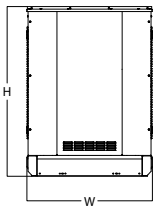

WEATHER PROTECTED ENCLOSURE	
L x W x H - in (mm)	154.4 (3,922) x 54.0 (1,372) x 69.8 (1,773)
Weight lbs (kg)	Steel: 6,261 - 7,596 (2,839 - 3,445) Aluminum: 5,795 - 6,786 (2,628 - 3,078)

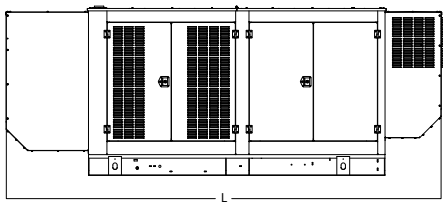

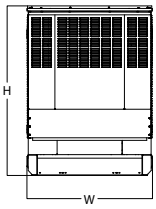

LEVEL 1 SOUND ATTENUATED ENCLOSURE	
L x W x H - in (mm)	179.9 (4,569) x 54.0 (1,372) x 69.8 (1,773)
Weight lbs (kg)	Steel 6,566 - 8,059 (2,978 - 3,655) Aluminum: 5,926 - 7,000 (2,688 - 3,175)

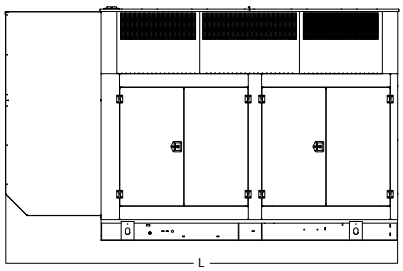

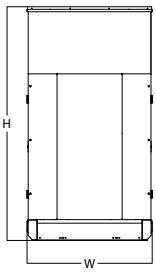

LEVEL 2 SOUND ATTENUATED ENCLOSURE	
L x W x H - in (mm)	154.4 (3,922) x 54.0 (1,372) x 93.3 (2,370)
Weight lbs (kg)	Steel: 6,801 - 8,632 (3,084 - 3,915) Aluminum: 6,027 - 7,247 (2,733 - 3,287)

* All measurements are approximate and for estimation purposes only.

YOUR FACTORY RECOGNIZED GENERAC INDUSTRIAL DEALER

Specification characteristics may change without notice. Dimensions and weights are for preliminary purposes only. Please consult a Generac Power Systems Industrial Dealer for detailed installation drawings

©2024 Generac Power Systems, Inc. All rights reserved. All specifications are subject to change without notice.
Part No. 100000
Rev. E 11/01/2024

SG250 | 14.2 L | 250 kW

INDUSTRIAL SPARK-IGNITED GENERATOR SET

EPA Certified Stationary Emergency and Non-Emergency

DEMAND RESPONSE READY

Standby Power Rating
250 kW, 313 kVA, 60 Hz

Demand Response Rating
250 kW, 313 kVA, 60 Hz

Prime Power Rating
225 kW, 281 kVA, 60 Hz

*Assembled in the USA using domestic and foreign parts

** Offered on units sold in the U.S. and Canada

Image used for illustration purposes only

Codes and Standards

Not all codes and standards apply to all configurations. Contact factory for details.

UL2200, UL6200, UL1236, UL489

CSA C22.2

BS5514 and DIN 6271

SAE J1349

NFPA 37, 70, 99, 110

NEC700, 701, 702, 708

NEMA ICS10, MG1, 250, ICS6, AB1

ANSI C62.41

IBC 2009, CBC 2010, IBC 2012, ASCE 7-05, ASCE 7-10, ICC-ES AC-156 (2012)

Powering a Smarter World

For over 65 years, Generac has been at the forefront of power generation, pioneering innovative solutions and unparalleled manufacturing excellence. At the heart of our reputation for superior quality lies our commitment to meticulously designing and manufacturing key components of our generators—ranging from alternators and enclosures to base tanks, control systems, and cutting-edge communications software.

Generac's gensets stand out for their unparalleled versatility and reliability. Engineered to offer a wide range of options and configurations, they are tailored to meet the unique demands of virtually any application, seamlessly adapting to its complexity. Our commitment to reliability drives us to globally source only the most dependable engines, selected through stringent criteria for optimal performance under the toughest industrial conditions.

Beyond the sale, Generac's dedication to our customers extends to comprehensive service support, for peace of mind and reliability long after your purchase. Our commitment is to not only provide state-of-the-art power solutions but also enduring success and satisfaction of our customers through ongoing support and service excellence.

SG250 | 14.2 L | 250 kW

INDUSTRIAL SPARK-IGNITED GENERATOR SET

EPA Certified Stationary Emergency and Non-Emergency

STANDARD FEATURES

DEMAND RESPONSE READY

ENGINE SYSTEM
- Oil Drain Extension
- Air Cleaner
- Fan Guard (Open Sets Only)
- Stainless Steel Flexible Exhaust Connection
- Factory Filled Oil and Coolant
- Radiator Duct Adapter (Open Set Only)
- Critical Silencer (Enclosed Units Only)
- Oil Temperature Indication and Alarm

FUEL SYSTEM
- NPT Fuel Connection on Frame
- Primary and Secondary Fuel Shutoff

COOLING SYSTEM
- Closed Coolant Recovery System
- UV/Ozone Resistant Hoses
- Factory-Installed Radiator
- 50/50 Ethylene Glycol Antifreeze
- Radiator Drain Extension

ELECTRICAL SYSTEM
- Battery Charging Alternator
- Battery Cables
- Battery Tray
- Rubber-Booted Engine Electrical Connections
- Solenoid Activated Starter Motor

ENCLOSURE (If Selected)
- Rust-Proof Fasteners with Nylon Washers to Protect Finish
- High Performance Sound-Absorbing Material (Sound Attenuated Enclosures)
- Gasketed Doors
- Upward Facing Discharge Hood (Radiator and Exhaust)
- Stainless Steel Lift Off Door Hinges
- Stainless Steel Lockable Handles
- RhinoCoat™ - Textured Polyester Powder Coat Paint

GENERATOR SET
- Internal Genset Vibration Isolation
- Separation of Circuits - High/Low Voltage
- Separation of Circuits - Multiple Breakers
- Wrapped Exhaust Piping
- Standard Factory Testing
- 2 Year Limited Warranty (Standby and Demand Response Rated Units)
- 1 Year Limited Warranty (Prime Rated Units)
- Silencer Mounted in the Discharge Hood (Enclosed Units Only)
- Ready to Accept Full Load in <10 Seconds

ALTERNATOR SYSTEM
- UL2200 GENprotect™
- Class H Insulation Material
- 2/3 Pitch
- Skewed Stator
- Permanent Magnet Excitation
- Sealed Bearing
- Amortisseur Winding
- Full Load Capacity Alternator

CONTROL SYSTEM

Power Zone® Pro Sync Controller

Program Functions
- NFPA 110 Level 1 Compliant
- Engine Protective Functions
- Alternator Protective Functions
- Digital Engine Governor Control
- Digital Voltage Regulator
- Multiple Programmable Inputs and Outputs
- Remote Display Capability
- Remote Communication via Modbus® RTU, Modbus TCP/IP, and Ethernet 10/100
- Alarm and Event Logging with Real Time Stamping
- Expandable Analog and Digital Inputs and Outputs
- Remote Wireless Software Update Capable
- BMS and Remote Telemetry
- Built-In Programmable Logic Eliminates the Need for External Controllers Under Most Conditions
- Ethernet Based Communications Between Generators
- Programmable I/O Channel Properties
- Built-In Diagnostics
- Arc Flash Maintenance Mode (When Correctly Equipped)

Alarms and Warnings
- Low Oil Pressure
- Low Coolant Level
- High/Low Coolant Temperature
- Sensor Failure
- Oil Temperature
- Over/Under Speed
- Over/Under Voltage
- Over/Under Frequency
- Over/Under Current
- Over Load
- High/Low Battery Voltage
- Battery Charger Current
- Phase to Phase and Phase to Neutral Short Circuits (I^2T Algorithm)

7 Inch Color Touch Screen Display
- Resistive Color Touch Screen
- Sunlight Readable (1400 NITS)
- Easily Identifiable Icons
- Multi-Lingual
- On Screen Editable Parameters
- Key Function Monitoring
- Three Phase Voltage, Amperage, kW, kVA, and kVAr
- Selectable Line to Line or Line to Neutral Measurements
- Frequency
- Engine Speed
- Engine Coolant Temperature
- Engine Oil Pressure
- Engine Oil Temperature
- Battery Voltage
- Hourmeter
- Warning and Alarm Indication
- Diagnostics
- Maintenance Events/Information

SG250 | 14.2 L | 250 kW

INDUSTRIAL SPARK-IGNITED GENERATOR SET

EPA Certified Stationary Emergency and Non-Emergency

CONFIGURABLE OPTIONS

DEMAND RESPONSE READY

ENGINE SYSTEM
- Engine Coolant Heater
- Baseframe Cover/Rodent Guard
- 2 Stage Air Cleaner
- Oil Heater
- Air Filter Restriction Indicator
- Radiator Stone Guard (Open Set Only)
- Level 1 Fan and Belt Guards (Enclosed Units Only)

FUEL SYSTEM
- NPT Flexible Fuel Line

ELECTRICAL SYSTEM
- 10A UL Listed Battery Charger
- Battery Warmer

ALTERNATOR SYSTEM
- Alternator Upsizing
- Anti-Condensation Heater
- Tropical Coating

CIRCUIT BREAKER OPTIONS
- Main Line Circuit Breaker
- 2nd Main Line Circuit Breaker
- 3rd Main Line Circuit Breaker
- Shunt Trip and Auxiliary Contact
- Electronic Trip Breakers

GENERATOR SET
- Demand Response Rating
- Extended Factory Testing (3-Phase Only)
- 12 Position Load Center
- Vapor Recovery Heater

ENCLOSURE
- Weather Protected Enclosure
- Level 1 Sound Attenuated
- Level 2 Sound Attenuated
- Level 2 Sound Attenuated with Motorized Dampers
- Level 3 Sound Attenuated (Steel Only)
- Steel Enclosure
- Aluminum Enclosure
- Up to 200 MPH Wind Load Rating (Contact Factory for Availability)
- AC/DC Enclosure Lighting Kit
- Enclosure Heaters (with Motorized Dampers Only)
- IBC Seismic Certification
- Door Open Alarm Switch

CONTROL SYSTEM
- NFPA 110 Level 1 Compliant 21-Light Remote Annunciator
- Remote Relay Assembly (8 or 16)
- Remote E-Stop (Break Glass-Type, Surface Mount)
- Remote E-Stop (Red Mushroom-Type, Surface Mount)
- Remote E-Stop (Red Mushroom-Type, Flush Mount)
- 10A Engine Run Relay
- Ground Fault Annunciator
- 100 dB Alarm Horn
- Damper Alarm Contacts (with Motorized Dampers Only)
- 120V GFCI and 240V Outlets

WARRANTY (Standby Gensets Only)
- 2 Year Extended Limited Warranty
- 5 Year Extended Limited Warranty
- 7 Year Extended Limited Warranty
- 10 Year Extended Limited Warranty

ENGINEERED OPTIONS

ENGINE SYSTEM
- Coolant Heater Ball Valves
- Fluid Containment Pans

CONTROL SYSTEM
- Battery Disconnect Switch

CIRCUIT BREAKER OPTIONS
- 4th Main Line Circuit Breaker

GENERATOR SET
- Special Testing
- Battery Box

SG250 | 14.2 L | 250 kW

INDUSTRIAL SPARK-IGNITED GENERATOR SET

EPA Certified Stationary Emergency and Non-Emergency

APPLICATION AND ENGINEERING DATA

DEMAND RESPONSE READY

ENGINE SPECIFICATIONS

General

Make	Generac
Cylinder #	6
Type	In-line
Displacement - in^3 (L)	864.71 (14.2)
Bore: in (mm)	5.31 (135)
Stroke: in (mm)	6.50 (165)
Compression Ratio	9.5:1
Intake Air Method	Turbocharged/Aftercooled
Number of Main Bearings	7
Connecting Rods	Steel Alloy
Cylinder Head	Cast Iron
Cylinder Liners	Ductile Iron
Ignition	Electronic
Piston Type	Aluminum
Crankshaft Type	Ductile Iron
Lifter Type	Solid
Intake Valve Material	Special Heat-Resistant Steel
Exhaust Valve Material	High Temperature Steel Alloy
Hardened Valve Seats	High Temperature Steel Alloy

Engine Governing

Governor	Electronic
Frequency Regulation (Steady State)	±0.25%

Lubrication System

Oil Pump Type	Gear
Oil Filter Type	Full Flow Spin-On Cartridge
Engine Oil Capacity: qt (L)	36.2 (34.3)

Cooling System

Cooling System Type	Pressurized Closed Recovery
Fan Type	Pusher
Fan Speed (RPM)	1,894
Fan Diameter - in (mm)	30 (762)

Fuel System

Fuel Type	Natural Gas
Carburetor	Down Draft
Secondary Fuel Regulator	Standard
Fuel Shut Off Solenoid	Standard
Operating Fuel Pressure- in H_2O (kPa)	7 - 11 (1.7 - 2.7)

*When designing the external fuel system, assume a 20% safety factor to the upper and lower limit of the specified fuel pressure range to account for site variation and measurement at the generator test port.Refer to Generac document 10000046207. Latest rev. for proper gas supply design guidelines. (Contact Factory for Details)

Engine Electrical System

System Voltage	24 VDC
Battery Charger Alternator	57.5 A
Battery Size	See Battery Index 0161970SBY
Battery Voltage	24 VDC
Ground Polarity	Negative (-)

ALTERNATOR SPECIFICATIONS

Standard Model	K0250124Y21
Poles	4
Field Type	Revolving
Insulation Class - Rotor	H
Insulation Class - Stator	H
Total Harmonic Distortion	<5%
Telephone Interference Factor (TIF)	<50
Standard Excitation	Permanent Magnet
Bearings	Single Sealed Ball
Coupling	Direct via Flexible Disc
Prototype Short Circuit Test	Yes
Voltage Regulator Type	Full Digital
Number of Sensed Phases	All
Regulation Accuracy (Steady State)	±0.25%

SG250 | 14.2 L | 250 kW

INDUSTRIAL SPARK-IGNITED GENERATOR SET

EPA Certified Stationary Emergency and Non-Emergency

OPERATING DATA

DEMAND RESPONSE READY

POWER RATINGS - NATURAL GAS

	Standby/Demand Response		Prime	
Three-Phase 120/208 VAC @0.8pf	250 kW/313 kVA	Amps: 868	225 kW/281 kVA	Amps: 782
Three-Phase 120/240 VAC @0.8pf	250 kW/313 kVA	Amps: 753	225 kW/281 kVA	Amps: 677
Three-Phase 277/480 VAC @0.8pf	250 kW/313 kVA	Amps: 376	225 kW/281 kVA	Amps: 339
Three-Phase 346/600 VAC @0.8pf	250 kW/313 kVA	Amps: 301	225 kW/281 kVA	Amps: 271

MOTOR STARTING CAPABILITIES (skVA)

skVA vs. Voltage Dip

277/480 VAC	30%	208/240 VAC	30%
K0250124Y21	630	K0250124Y21	506
K0300124Y21	790	K0300124Y21	609

FUEL CONSUMPTION RATES*

Natural Gas – scfh (m^3/hr)

Percent Load	Standby/Demand Response	Prime
25%	1,020 (28.9)	990 (28.0)
50%	1,620 (45.9)	1,260 (35.7)
75%	2,520 (71.4)	1,980 (56.1)
100%	3,180 (90.0)	2,700 (76.5)

* 1.5X maximum site rated fuel consumption should be used for gas supply design practices. Refer to Generac 10000046207, latest rev., for more information or contact factory for details.

COOLING

		Standby/Demand Response	Prime
Air Flow (Fan Air Flow Across Radiator)	cfm (m^3/min)	10,078 (285.4)	10,078 (285.4)
Coolant Flow	gpm (Lpm)	90 (340.7)	90 (340.7)
Coolant System Capacity	gal (L)	15 (54.9)	15 (54.9)
Maximum Operating Ambient Temperature	°F (°C)	122 (50)	122 (50)
Maximum Operating Ambient Temperature (Before Derate)		See Bulletin No. 0199270SSD	See Bulletin No. 0199270SSD
Maximum Additional Radiator Backpressure	in H_2O (kPa)	0.5 (0.12)	0.5 (0.12)

COMBUSTION AIR REQUIREMENTS

	Standby/Demand Response	Prime
Flow at rated power cfm - (m^3/min)	506 (14.3)	455 (12.9)

ENGINE

		Standby/Demand Response	Prime
Rated Engine Speed	RPM	1,800	1,800
Horsepower at Rated kW**	hp	375	337
Piston Speed	ft/min (m/min)	1,950 (594)	1,950 (594)
BMEP	psi (kPa)	190 (1,313)	171 (1,182)

** See “Emissions Data Sheet” for maximum bHP for EPA and SCAQMD permitting purposes.

EXHAUST

		Standby/Demand Response	Prime
Exhaust Flow (Rated Output)	cfm (m^3/min)	1,703 (48)	1,517 (43)
Max. Backpressure (Post Silencer)	inHg (kPa)	0.75 (2.54)	0.75 (2.54)
Exhaust Temp (Rated Output - Post Silencer)	°F (°C)	1,357 (736)	1,340 (727)

Deration – Operational characteristics consider maximum ambient conditions. Derate factors may apply under atypical site conditions.
Please contact a Generac Power Systems Industrial Dealer for additional details. All performance ratings in accordance with BS5514 and DIN6271 standards.
Standby - See Bulletin 0187500SSB • Demand Response - See Bulletin 10000018250 • Prime - See Bulletin 0187510SSB

SG250 | 14.2 L | 250 kW

INDUSTRIAL SPARK-IGNITED GENERATOR SET

EPA Certified Stationary Emergency and Non-Emergency

DIMENSIONS AND WEIGHTS*

DEMAND RESPONSE READY

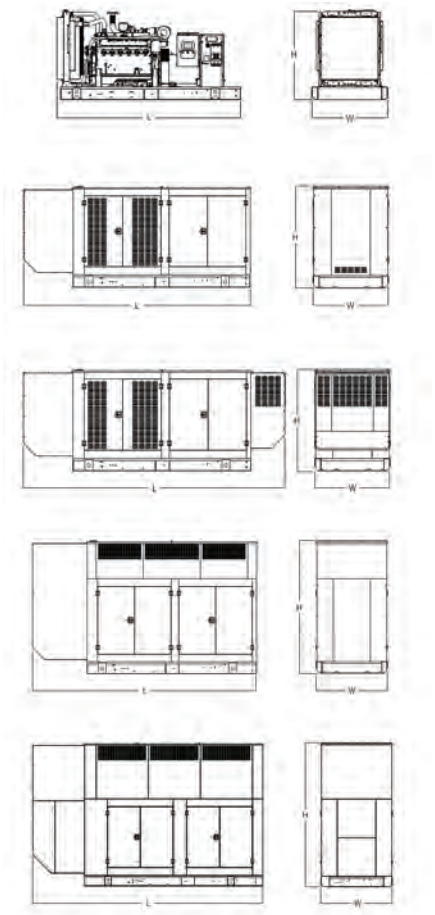

OPEN SET (Includes Exhaust Flex)

L x W x H - in (mm)	136.0 (3,454) x 57.1 (1,450) x 67.9 (1,725)
Weight - lbs (kg)	5,883 - 6,031 (2,668 - 2,735)

WEATHER PROTECTED ENCLOSURE

L x W x H - in (mm)	174.7 (4,437) x 57.5 (1,461) x 77.8 (1,976)
Weight - lbs (kg)	Steel: 7,448 - 7,596 (3,378 - 3,445) Aluminum: 6,654 - 6,801 (3,018 - 3,084)

LEVEL 1 SOUND ATTENUATED ENCLOSURE

L x W x H - in (mm)	200.2 (5,085) x 57.5 (1,461) x 77.8 (1,976)
Weight - lbs (kg)	Steel 7,911 - 8,059 (3,588 - 3,655) Aluminum: 6,853 - 7,000 (3,108 - 3,175)

LEVEL 2 SOUND ATTENUATED ENCLOSURE

L x W x H - in (mm)	180.6 (4,587) x 57.5 (1,461) x 111.3 (2,827)
Weight - lbs (kg)	Steel: 8,484 - 8,632 (3,848 - 3,915) Aluminum: 7,099 - 7,247 (3,220 - 3,287)

LEVEL 3 SOUND ATTENUATED ENCLOSURE

L x W x H - in (mm)	207.3 (5,265) x 63.7 (1,618) x 128.9 (3,274)
Weight - lbs (kg)	10,840 - 10,990 (4,916 - 4,984)

* All measurements are approximate and for estimation purposes only.

YOUR FACTORY RECOGNIZED GENERAC INDUSTRIAL DEALER

Specification characteristics may change without notice. Dimensions and weights are for preliminary purposes only. Please consult a Generac Power Systems Industrial Dealer for detailed installation drawings

SPEC SHEET

Generac Power Systems, Inc. | S45 W29290 HWY. 59 | Waukesha, WI 53189 | generac.com

©2024 Generac Power Systems, Inc. All rights reserved. All specifications are subject to change without notice.

Part No. 100000
Rev. E 10/29/2024

SG250 | 14.2 L | 250 kW

INDUSTRIAL SPARK-IGNITED GENERATOR SET

EPA Certified Stationary Emergency and Non-Emergency

DEMAND RESPONSE READY

Standby Power Rating
250 kW, 313 kVA, 60 Hz

Demand Response Rating
250 kW, 313 kVA, 60 Hz

Prime Power Rating
225 kW, 281 kVA, 60 Hz

USA ENGINEERED & BUILT* *Assembled in the USA using domestic and foreign parts

SMART GRID READY GENERAC GRID SERVICES **

** Offered on units sold in the U.S. and Canada

Image used for illustration purposes only

Codes and Standards

Not all codes and standards apply to all configurations. Contact factory for details.

UL2200, UL6200, UL1236, UL489

CSA C22.2

BS5514 and DIN 6271

SAE J1349

NFPA 37, 70, 99, 110

NEC700, 701, 702, 708

NEMA ICS10, MG1, 250, ICS6, AB1

ANSI C62.41

IBC 2009, CBC 2010, IBC 2012, ASCE 7-05, ASCE 7-10, ICC-ES AC-156 (2012)

Powering a Smarter World

For over 65 years, Generac has been at the forefront of power generation, pioneering innovative solutions and unparalleled manufacturing excellence. At the heart of our reputation for superior quality lies our commitment to meticulously designing and manufacturing key components of our generators—ranging from alternators and enclosures to base tanks, control systems, and cutting-edge communications software.

Generac's gensets stand out for their unparalleled versatility and reliability. Engineered to offer a wide range of options and configurations, they are tailored to meet the unique demands of virtually any application, seamlessly adapting to its complexity. Our commitment to reliability drives us to globally source only the most dependable engines, selected through stringent criteria for optimal performance under the toughest industrial conditions.

Beyond the sale, Generac's dedication to our customers extends to comprehensive service support, for peace of mind and reliability long after your purchase. Our commitment is to not only provide state-of-the-art power solutions but also enduring success and satisfaction of our customers through ongoing support and service excellence.

SG250 | 14.2 L | 250 kW

INDUSTRIAL SPARK-IGNITED GENERATOR SET

EPA Certified Stationary Emergency and Non-Emergency

STANDARD FEATURES

DEMAND RESPONSE READY

ENGINE SYSTEM
- Oil Drain Extension
- Air Cleaner
- Fan Guard (Open Sets Only)
- Stainless Steel Flexible Exhaust Connection
- Factory Filled Oil and Coolant
- Radiator Duct Adapter (Open Set Only)
- Critical Silencer (Enclosed Units Only)
- Oil Temperature Indication and Alarm

FUEL SYSTEM
- NPT Fuel Connection on Frame
- Primary and Secondary Fuel Shutoff

COOLING SYSTEM
- Closed Coolant Recovery System
- UV/Ozone Resistant Hoses
- Factory-Installed Radiator
- 50/50 Ethylene Glycol Antifreeze
- Radiator Drain Extension

ELECTRICAL SYSTEM
- Battery Charging Alternator
- Battery Cables
- Battery Tray
- Rubber-Booted Engine Electrical Connections
- Solenoid Activated Starter Motor

ENCLOSURE (If Selected)
- Rust-Proof Fasteners with Nylon Washers to Protect Finish
- High Performance Sound-Absorbing Material (Sound Attenuated Enclosures)
- Gasketed Doors
- Upward Facing Discharge Hood (Radiator and Exhaust)
- Stainless Steel Lift Off Door Hinges
- Stainless Steel Lockable Handles
- RhinoCoat™ - Textured Polyester Powder Coat Paint

GENERATOR SET
- Internal Genset Vibration Isolation
- Separation of Circuits - High/Low Voltage
- Separation of Circuits - Multiple Breakers
- Wrapped Exhaust Piping
- Standard Factory Testing
- 2 Year Limited Warranty (Standby and Demand Response Rated Units)
- 1 Year Limited Warranty (Prime Rated Units)
- Silencer Mounted in the Discharge Hood (Enclosed Units Only)
- Ready to Accept Full Load in <10 Seconds

ALTERNATOR SYSTEM
- UL2200 GENprotect™
- Class H Insulation Material
- 2/3 Pitch
- Skewed Stator
- Permanent Magnet Excitation
- Sealed Bearing
- Amortisseur Winding
- Full Load Capacity Alternator

CONTROL SYSTEM

Power Zone® Pro Sync Controller

Program Functions
- NFPA 110 Level 1 Compliant
- Engine Protective Functions
- Alternator Protective Functions
- Digital Engine Governor Control
- Digital Voltage Regulator
- Multiple Programmable Inputs and Outputs
- Remote Display Capability
- Remote Communication via Modbus® RTU, Modbus TCP/IP, and Ethernet 10/100
- Alarm and Event Logging with Real Time Stamping
- Expandable Analog and Digital Inputs and Outputs
- Remote Wireless Software Update Capable
- BMS and Remote Telemetry
- Built-In Programmable Logic Eliminates the Need for External Controllers Under Most Conditions
- Ethernet Based Communications Between Generators
- Programmable I/O Channel Properties
- Built-In Diagnostics
- Arc Flash Maintenance Mode (When Correctly Equipped)

Alarms and Warnings
- Low Oil Pressure
- Low Coolant Level
- High/Low Coolant Temperature
- Sensor Failure
- Oil Temperature
- Over/Under Speed
- Over/Under Voltage
- Over/Under Frequency
- Over/Under Current
- Over Load
- High/Low Battery Voltage
- Battery Charger Current
- Phase to Phase and Phase to Neutral Short Circuits (I^2T Algorithm)

7 Inch Color Touch Screen Display
- Resistive Color Touch Screen
- Sunlight Readable (1400 NITS)
- Easily Identifiable Icons
- Multi-Lingual
- On Screen Editable Parameters
- Key Function Monitoring
- Three Phase Voltage, Amperage, kW, kVA, and kVAr
- Selectable Line to Line or Line to Neutral Measurements
- Frequency
- Engine Speed
- Engine Coolant Temperature
- Engine Oil Pressure
- Engine Oil Temperature
- Battery Voltage
- Hourmeter
- Warning and Alarm Indication
- Diagnostics
- Maintenance Events/Information

SG250 | 14.2 L | 250 kW

INDUSTRIAL SPARK-IGNITED GENERATOR SET

EPA Certified Stationary Emergency and Non-Emergency

CONFIGURABLE OPTIONS

DEMAND RESPONSE READY

ENGINE SYSTEM
- Engine Coolant Heater
- Baseframe Cover/Rodent Guard
- 2 Stage Air Cleaner
- Oil Heater
- Air Filter Restriction Indicator
- Radiator Stone Guard (Open Set Only)
- Level 1 Fan and Belt Guards (Enclosed Units Only)

FUEL SYSTEM
- NPT Flexible Fuel Line

ELECTRICAL SYSTEM
- 10A UL Listed Battery Charger
- Battery Warmer

ALTERNATOR SYSTEM
- Alternator Upsizing
- Anti-Condensation Heater
- Tropical Coating

CIRCUIT BREAKER OPTIONS
- Main Line Circuit Breaker
- 2nd Main Line Circuit Breaker
- 3rd Main Line Circuit Breaker
- Shunt Trip and Auxiliary Contact
- Electronic Trip Breakers

GENERATOR SET
- Demand Response Rating
- Extended Factory Testing (3-Phase Only)
- 12 Position Load Center
- Vapor Recovery Heater

ENCLOSURE
- Weather Protected Enclosure
- Level 1 Sound Attenuated
- Level 2 Sound Attenuated
- Level 2 Sound Attenuated with Motorized Dampers
- Level 3 Sound Attenuated (Steel Only)
- Steel Enclosure
- Aluminum Enclosure
- Up to 200 MPH Wind Load Rating (Contact Factory for Availability)
- AC/DC Enclosure Lighting Kit
- Enclosure Heaters (with Motorized Dampers Only)
- IBC Seismic Certification
- Door Open Alarm Switch

CONTROL SYSTEM
- NFPA 110 Level 1 Compliant 21-Light Remote Annunciator
- Remote Relay Assembly (8 or 16)
- Remote E-Stop (Break Glass-Type, Surface Mount)
- Remote E-Stop (Red Mushroom-Type, Surface Mount)
- Remote E-Stop (Red Mushroom-Type, Flush Mount)
- 10A Engine Run Relay
- Ground Fault Annunciator
- 100 dB Alarm Horn
- Damper Alarm Contacts (with Motorized Dampers Only)
- 120V GFCI and 240V Outlets

WARRANTY (Standby Gensets Only)
- 2 Year Extended Limited Warranty
- 5 Year Extended Limited Warranty
- 7 Year Extended Limited Warranty
- 10 Year Extended Limited Warranty

ENGINEERED OPTIONS

ENGINE SYSTEM
- Coolant Heater Ball Valves
- Fluid Containment Pans

CONTROL SYSTEM
- Battery Disconnect Switch

CIRCUIT BREAKER OPTIONS
- 4th Main Line Circuit Breaker

GENERATOR SET
- Special Testing
- Battery Box

SG250 | 14.2 L | 250 kW

INDUSTRIAL SPARK-IGNITED GENERATOR SET

EPA Certified Stationary Emergency and Non-Emergency

APPLICATION AND ENGINEERING DATA

DEMAND RESPONSE READY

ENGINE SPECIFICATIONS

General

Make	Generac
Cylinder #	6
Type	In-line
Displacement - in^3 (L)	864.71 (14.2)
Bore: in (mm)	5.31 (135)
Stroke: in (mm)	6.50 (165)
Compression Ratio	9.5:1
Intake Air Method	Turbocharged/Aftercooled
Number of Main Bearings	7
Connecting Rods	Steel Alloy
Cylinder Head	Cast Iron
Cylinder Liners	Ductile Iron
Ignition	Electronic
Piston Type	Aluminum
Crankshaft Type	Ductile Iron
Lifter Type	Solid
Intake Valve Material	Special Heat-Resistant Steel
Exhaust Valve Material	High Temperature Steel Alloy
Hardened Valve Seats	High Temperature Steel Alloy

Engine Governing

Governor	Electronic
Frequency Regulation (Steady State)	±0.25%

Lubrication System

Oil Pump Type	Gear
Oil Filter Type	Full Flow Spin-On Cartridge
Engine Oil Capacity: qt (L)	36.2 (34.3)

Cooling System

Cooling System Type	Pressurized Closed Recovery
Fan Type	Pusher
Fan Speed (RPM)	1,894
Fan Diameter - in (mm)	30 (762)

Fuel System

Fuel Type	Natural Gas
Carburetor	Down Draft
Secondary Fuel Regulator	Standard
Fuel Shut Off Solenoid	Standard
Operating Fuel Pressure- in H_2O (kPa)	7 - 11 (1.7 - 2.7)

*When designing the external fuel system, assume a 20% safety factor to the upper and lower limit of the specified fuel pressure range to account for site variation and measurement at the generator test port.Refer to Generac document 10000046207. Latest rev. for proper gas supply design guidelines. (Contact Factory for Details)

Engine Electrical System

System Voltage	24 VDC
Battery Charger Alternator	57.5 A
Battery Size	See Battery Index 0161970SBY
Battery Voltage	24 VDC
Ground Polarity	Negative (-)

ALTERNATOR SPECIFICATIONS

Standard Model	K0250124Y21
Poles	4
Field Type	Revolving
Insulation Class - Rotor	H
Insulation Class - Stator	H
Total Harmonic Distortion	<5%
Telephone Interference Factor (TIF)	<50
Standard Excitation	Permanent Magnet
Bearings	Single Sealed Ball
Coupling	Direct via Flexible Disc
Prototype Short Circuit Test	Yes
Voltage Regulator Type	Full Digital
Number of Sensed Phases	All
Regulation Accuracy (Steady State)	±0.25%

SG250 | 14.2 L | 250 kW

INDUSTRIAL SPARK-IGNITED GENERATOR SET

EPA Certified Stationary Emergency and Non-Emergency

OPERATING DATA

DEMAND RESPONSE READY

POWER RATINGS - NATURAL GAS

	Standby/Demand Response		Prime	
Three-Phase 120/208 VAC @0.8pf	250 kW/313 kVA	Amps: 868	225 kW/281 kVA	Amps: 782
Three-Phase 120/240 VAC @0.8pf	250 kW/313 kVA	Amps: 753	225 kW/281 kVA	Amps: 677
Three-Phase 277/480 VAC @0.8pf	250 kW/313 kVA	Amps: 376	225 kW/281 kVA	Amps: 339
Three-Phase 346/600 VAC @0.8pf	250 kW/313 kVA	Amps: 301	225 kW/281 kVA	Amps: 271

MOTOR STARTING CAPABILITIES (skVA)

skVA vs. Voltage Dip

277/480 VAC	30%	208/240 VAC	30%
K0250124Y21	630	K0250124Y21	506
K0300124Y21	790	K0300124Y21	609

FUEL CONSUMPTION RATES*

Natural Gas – scfh (m^3/hr)

Percent Load	Standby/Demand Response	Prime
25%	1,020 (28.9)	990 (28.0)
50%	1,620 (45.9)	1,260 (35.7)
75%	2,520 (71.4)	1,980 (56.1)
100%	3,180 (90.0)	2,700 (76.5)

* 1.5X maximum site rated fuel consumption should be used for gas supply design practices. Refer to Generac 10000046207, latest rev., for more information or contact factory for details.

COOLING

		Standby/Demand Response	Prime
Air Flow (Fan Air Flow Across Radiator)	cfm (m^3/min)	10,078 (285.4)	10,078 (285.4)
Coolant Flow	gpm (Lpm)	90 (340.7)	90 (340.7)
Coolant System Capacity	gal (L)	15 (54.9)	15 (54.9)
Maximum Operating Ambient Temperature	°F (°C)	122 (50)	122 (50)
Maximum Operating Ambient Temperature (Before Derate)		See Bulletin No. 0199270SSD	See Bulletin No. 0199270SSD
Maximum Additional Radiator Backpressure	in H_2O (kPa)	0.5 (0.12)	0.5 (0.12)

COMBUSTION AIR REQUIREMENTS

	Standby/Demand Response	Prime
Flow at rated power cfm - (m^3/min)	506 (14.3)	455 (12.9)

ENGINE

		Standby/Demand Response	Prime
Rated Engine Speed	RPM	1,800	1,800
Horsepower at Rated kW**	hp	375	337
Piston Speed	ft/min (m/min)	1,950 (594)	1,950 (594)
BMEP	psi (kPa)	190 (1,313)	171 (1,182)

** See “Emissions Data Sheet” for maximum bHP for EPA and SCAQMD permitting purposes.

EXHAUST

		Standby/Demand Response	Prime
Exhaust Flow (Rated Output)	cfm (m^3/min)	1,703 (48)	1,517 (43)
Max. Backpressure (Post Silencer)	inHg (kPa)	0.75 (2.54)	0.75 (2.54)
Exhaust Temp (Rated Output - Post Silencer)	°F (°C)	1,357 (736)	1,340 (727)

Deration – Operational characteristics consider maximum ambient conditions. Derate factors may apply under atypical site conditions.
Please contact a Generac Power Systems Industrial Dealer for additional details. All performance ratings in accordance with BS5514 and DIN6271 standards.
Standby - See Bulletin 0187500SSB • Demand Response - See Bulletin 10000018250 • Prime - See Bulletin 0187510SSB

SG250 | 14.2 L | 250 kW

INDUSTRIAL SPARK-IGNITED GENERATOR SET

EPA Certified Stationary Emergency and Non-Emergency

DIMENSIONS AND WEIGHTS*

DEMAND RESPONSE READY

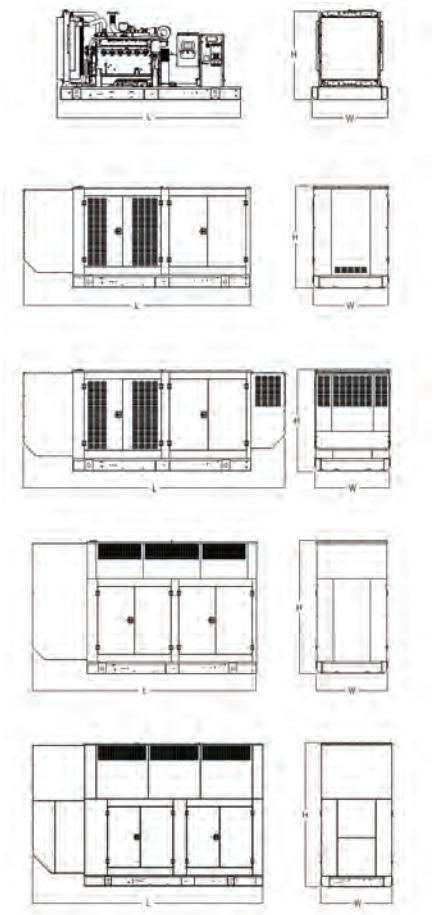

OPEN SET (Includes Exhaust Flex)

L x W x H - in (mm)	136.0 (3,454) x 57.1 (1,450) x 67.9 (1,725)
Weight - lbs (kg)	5,883 - 6,031 (2,668 - 2,735)

WEATHER PROTECTED ENCLOSURE

L x W x H - in (mm)	174.7 (4,437) x 57.5 (1,461) x 77.8 (1,976)
Weight - lbs (kg)	Steel: 7,448 - 7,596 (3,378 - 3,445) Aluminum: 6,654 - 6,801 (3,018 - 3,084)

LEVEL 1 SOUND ATTENUATED ENCLOSURE

L x W x H - in (mm)	200.2 (5,085) x 57.5 (1,461) x 77.8 (1,976)
Weight - lbs (kg)	Steel 7,911 - 8,059 (3,588 - 3,655) Aluminum: 6,853 - 7,000 (3,108 - 3,175)

LEVEL 2 SOUND ATTENUATED ENCLOSURE

L x W x H - in (mm)	180.6 (4,587) x 57.5 (1,461) x 111.3 (2,827)
Weight - lbs (kg)	Steel: 8,484 - 8,632 (3,848 - 3,915) Aluminum: 7,099 - 7,247 (3,220 - 3,287)

LEVEL 3 SOUND ATTENUATED ENCLOSURE

L x W x H - in (mm)	207.3 (5,265) x 63.7 (1,618) x 128.9 (3,274)
Weight - lbs (kg)	10,840 - 10,990 (4,916 - 4,984)

* All measurements are approximate and for estimation purposes only.

YOUR FACTORY RECOGNIZED GENERAC INDUSTRIAL DEALER

Specification characteristics may change without notice. Dimensions and weights are for preliminary purposes only. Please consult a Generac Power Systems Industrial Dealer for detailed installation drawings

Generac Power Systems, Inc. | S45 W29290 HWY. 59 | Waukesha, WI 53189 | generac.com
©2024 Generac Power Systems, Inc. All rights reserved. All specifications are subject to change without notice.
Part No. 100000
Rev. E 10/29/2024

SG300 | 14.2L | 300 kW

INDUSTRIAL SPARK-IGNITED GENERATOR SET

EPA Certified Stationary Emergency and Non-Emergency

DEMAND RESPONSE READY

Standby Power Rating
300 kW, 375 kVA, 60 Hz

Demand Response Rating
300 kW, 375 kVA, 60 Hz

Prime Power Rating
270 kW, 338 kVA, 60 Hz

Image used for illustration purposes only

*Assembled in the USA using domestic and foreign parts

** Offered on units sold in the U.S. and Canada

Codes and Standards

Not all codes and standards apply to all configurations. Contact factory for details.

UL2200, UL6200, UL1236, UL489

CSA C22.2

BS5514 and DIN 6271

SAE J1349

NFPA 37, 70, 99, 110

NEC700, 701, 702, 708

NEMA ICS10, MG1, 250, ICS6, AB1

ANSI C62.41

IBC 2009, CBC 2010, IBC 2012, ASCE 7-05, ASCE 7-10, ICC-ES AC-156 (2012)

Powering Ahead

Generac provides superior quality by designing and manufacturing most of its generator components, such as alternators, enclosures, control systems and communications software. Generac also makes its own spark-ignited engines, and they can be found on every Generac gaseous-fueled generator. We engineer and manufacture them from the block up — all at our facilities throughout Wisconsin. Applying natural gas and LP-fueled engines to generators requires advanced engineering expertise for reliability, durability and necessary performance. By designing specifically for these dry, hotter-burning fuels, the engines last longer and require less maintenance. Building our own engines also means we control every step of the supply chain and delivery process, so you benefit from single-source responsibility.

Plus, Generac Industrial Power's distribution network provides all parts and service so owners don't have to deal with third-party suppliers. It all leads to a positive owner experience and higher confidence level. Generac spark-ignited engines give more options in commercial and industrial generator applications as well as extended run time from utility-supplied natural gas.

SG300 | 14.2L | 300 kW

INDUSTRIAL SPARK-IGNITED GENERATOR SET

EPA Certified Stationary Emergency and Non-Emergency

STANDARD FEATURES

DEMAND RESPONSE READY

ENGINE SYSTEM
- Oil Drain Extension
- Air Cleaner
- Fan Guard
- Stainless Steel Flexible Exhaust Connection
- Factory Filled Oil and Coolant
- Radiator Duct Adapter (Open Set Only)
- Critical Silencer (Enclosed Units Only)
- Oil Temperature Indication and Alarm

FUEL SYSTEM
- NPT Fuel Connection on Frame
- Primary and Secondary Fuel Shutoff

COOLING SYSTEM
- Closed Coolant Recovery System
- UV/Ozone Resistant Hoses
- Factory-Installed Radiator
- 50/50 Ethylene Glycol Antifreeze
- Radiator Drain Extension

ELECTRICAL SYSTEM
- Battery Charging Alternator
- Battery Cables
- Battery Tray
- Rubber-Booted Engine Electrical Connections
- Solenoid Activated Starter Motor

ENCLOSURE (If Selected)
- Rust-Proof Fasteners with Nylon Washers to Protect Finish
- High Performance Sound-Absorbing Material (Sound Attenuated Enclosures)
- Gasketed Doors
- Upward Facing Discharge Hood (Radiator and Exhaust)
- Stainless Steel Lift Off Door Hinges
- Stainless Steel Lockable Handles
- RhinoCoat™ - Textured Polyester Powder Coat Paint

GENERATOR SET
- Internal Genset Vibration Isolation
- Separation of Circuits - High/Low Voltage
- Separation of Circuits - Multiple Breakers
- Wrapped Exhaust Piping
- Standard Factory Testing
- 2 Year Limited Warranty (Standby Rated Units)
- Ready to Accept Full Load in <10 Seconds

ALTERNATOR SYSTEM
- UL2200 GENprotect™
- Class H Insulation Material
- 2/3 Pitch
- Skewed Stator
- Permanent Magnet Excitation
- Sealed Bearing
- Amortisseur Winding
- Full Load Capacity Alternator

CONTROL SYSTEM

Power Zone® Pro Sync Controller

Program Functions
- NFPA 110 Level 1 Compliant
- Engine Protective Functions
- Alternator Protective Functions
- Digital Engine Governor Control
- Digital Voltage Regulator
- Multiple Programmable Inputs and Outputs
- Remote Display Capability
- Remote Communication via Modbus® RTU, Modbus TCP/IP, and Ethernet 10/100
- Alarm and Event Logging with Real Time Stamping
- Expandable Analog and Digital Inputs and Outputs
- Remote Wireless Software Update Capable
- BMS and Remote Telemetry
- Built-In Programmable Logic Eliminates the Need for External Controllers Under Most Conditions
- Ethernet Based Communications Between Generators
- Programmable I/O Channel Properties
- Built-In Diagnostics
- Arc Flash Maintenance Mode (When Correctly Equipped)

Alarms and Warnings
- Low Oil Pressure
- Low Coolant Level
- High/Low Coolant Temperature
- Sensor Failure
- Oil Temperature
- Over/Under Speed
- Over/Under Voltage
- Over/Under Frequency
- Over/Under Current
- Over Load
- High/Low Battery Voltage
- Battery Charger Current
- Phase to Phase and Phase to Neutral Short Circuits (I^2T Algorithm)

7 Inch Color Touch Screen Display
- Resistive Color Touch Screen
- Sunlight Readable (1400 NITS)
- Easily Identifiable Icons
- Multi-Lingual
- On Screen Editable Parameters
- Key Function Monitoring
- Three Phase Voltage, Amperage, kW, kVA, and kVAr
- Selectable Line to Line or Line to Neutral Measurements
- Frequency
- Engine Speed
- Engine Coolant Temperature
- Engine Oil Pressure
- Engine Oil Temperature
- Battery Voltage
- Hourmeter
- Warning and Alarm Indication
- Diagnostics
- Maintenance Events/Information

SG300 | 14.2L | 300 kW

INDUSTRIAL SPARK-IGNITED GENERATOR SET

EPA Certified Stationary Emergency and Non-Emergency

CONFIGURABLE OPTIONS

DEMAND RESPONSE READY

ENGINE SYSTEM
- Engine Coolant Heater
- Baseframe Cover/Rodent Guard
- 2 Stage Air Cleaner
- Oil Heater
- Air Filter Restriction Indicator
- Radiator Stone Guard (Open Set Only)
- Level 1 Fan and Belt Guards

FUEL SYSTEM
- NPT Flexible Fuel Line

ELECTRICAL SYSTEM
- 10A UL Listed Battery Charger
- Battery Warmer

ALTERNATOR SYSTEM
- Alternator Upsizing
- Anti-Condensation Heater
- Tropical Coating

CIRCUIT BREAKER OPTIONS
- Main Line Circuit Breaker
- 2nd Main Line Circuit Breaker
- 3rd Main Line Circuit Breaker
- Shunt Trip and Auxiliary Contact
- Electronic Trip Breakers

GENERATOR SET
- Demand Response Rating
- Extended Factory Testing (3-Phase Only)
- 12 Position Load Center
- Vapor Recovery Heater

ENCLOSURE
- Weather Protected Enclosure
- Level 1 Sound Attenuated
- Level 2 Sound Attenuated
- Level 2 Sound Attenuated with Motorized Dampers
- Level 3 Sound Attenuated (Steel Only)
- Steel Enclosure
- Aluminum Enclosure
- Up to 200 MPH Wind Load Rating (Contact Factory for Availability)
- AC/DC Enclosure Lighting Kit
- Enclosure Heaters
- IBC Seismic Certification
- Door Open Alarm Switch

CONTROL SYSTEM
- NFPA 110 Level 1 Compliant 21-Light Remote Annunciator
- Remote Relay Assembly (8 or 16)
- Remote E-Stop (Break Glass-Type, Surface Mount)
- Remote E-Stop (Red Mushroom-Type, Surface Mount)
- Remote E-Stop (Red Mushroom-Type, Flush Mount)
- 10A Engine Run Relay
- Ground Fault Annunciator
- 120V GFCI and 240V Outlets
- Damper Alarm Contacts (with Motorized Dampers Only)
- 100 dB Alarm Horn

WARRANTY (Standby Gensets Only)
- 2 Year Extended Limited Warranty
- 5 Year Extended Limited Warranty
- 7 Year Extended Limited Warranty
- 10 Year Extended Limited Warranty

ENGINEERED OPTIONS

ENGINE SYSTEM
- Fluid Containment Pans

CONTROL SYSTEM
- Battery Disconnect Switch

CIRCUIT BREAKER OPTIONS
- 4th Main Line Circuit Breaker

GENERATOR SET
- Special Testing
- Battery Box

SG300 | 14.2L | 300 kW

INDUSTRIAL SPARK-IGNITED GENERATOR SET

EPA Certified Stationary Emergency and Non-Emergency

APPLICATION AND ENGINEERING DATA

DEMAND RESPONSE READY

ENGINE SPECIFICATIONS

General

Make	Generac
Cylinder #	6
Type	In-line
Displacement - in^3 (L)	864.71 (14.2)
Bore: in (mm)	5.31 (135)
Stroke: in (mm)	6.50 (165)
Compression Ratio	9.5:1
Intake Air Method	Turbocharged/Aftercooled
Number of Main Bearings	7
Connecting Rods	Steel Alloy
Cylinder Head	Cast Iron GT250, OHV
Cylinder Liners	Ductile Iron
Ignition	Electronic
Piston Type	Aluminum
Crankshaft Type	Ductile Iron
Lifter Type	Solid
Intake Valve Material	Special Heat-Resistant Steel
Exhaust Valve Material	High Temperature Steel Alloy
Hardened Valve Seats	High Temperature Steel Alloy

Engine Governing

Governor	Electronic
Frequency Regulation (Steady State)	±0.25%

Lubrication System

Oil Pump	Gear
Oil Filter Type	Full-Flow with Cartridge
Engine Oil Capacity: qt (L)	36.2 (34.3)

Cooling System

Cooling System Type	Pressurized Closed Recovery
Fan Type	Pusher
Fan Speed (RPM)	1,894
Fan Diameter - in (mm)	34 (864)

Fuel System

Fuel Type	Natural Gas
Carburetor	Down Draft
Secondary Fuel Regulator	Standard
Fuel Shut Off Solenoid	Standard
Operating Fuel Pressure- in H_2O (kPa)	7 - 11 (1.7 - 2.7)

*When designing the external fuel system, assume a 20% safety factor to the upper and lower limit of the specified fuel pressure range to account for site variation and measurement at the generator test port. Refer to Generac document 10000046207, latest rev. for proper gas supply design guidelines. (Contact Factory for Details)

Engine Electrical System

System Voltage	24 VDC
Battery Charger Alternator	58 A
Battery Size	See Battery Index 0161970SBY
Battery Voltage	(2) - 12 VDC
Ground Polarity	Negative (-)

ALTERNATOR SPECIFICATIONS

Standard Model	K0300124Y21
Poles	4
Field Type	Revolving
Insulation Class - Rotor	H
Insulation Class - Stator	H
Total Harmonic Distortion	<5% (3-Phase)
Telephone Interference Factor (TIF)	<50
Standard Excitation	Permanent Magnet
Bearings	Sealed Ball
Coupling	Direct via Flexible Disc
Prototype Short Circuit Test	Yes
Voltage Regulator Type	Full Digital
Number of Sensed Phases	All
Regulation Accuracy (Steady State)	±0.25%

SG300 | 14.2L | 300 kW

INDUSTRIAL SPARK-IGNITED GENERATOR SET

EPA Certified Stationary Emergency and Non-Emergency

OPERATING DATA

DEMAND RESPONSE READY

POWER RATINGS - NATURAL GAS

	Standby/Demand Response		Prime	
Three-Phase 120/208 VAC @0.8pf	300kW/375 kVA	Amps: 1,042	270 kW/337.5 kVA	Amps: 938
Three-Phase 120/240 VAC @0.8pf	300kW/375 kVA	Amps: 903	270 kW/337.5 kVA	Amps: 813
Three-Phase 277/480 VAC @0.8pf	300kW/375 kVA	Amps: 452	270 kW/337.5 kVA	Amps: 406
Three-Phase 346/600 VAC @0.8pf	300kW/375 kVA	Amps: 361	270 kW/337.5 kVA	Amps: 325

MOTOR STARTING CAPABILITIES (skVA)

skVA vs. Voltage Dip

277/480 VAC	30%	208/240 VAC	30%
K0300124Y21	790	K0300124Y21	609

FUEL CONSUMPTION RATES*

Natural Gas – scfh (m^3/hr)

Percent Load	Standby/Demand Response	Prime
25%	1,260 (35.7)	1,200 (34.0)
50%	1,980 (56.1)	1,860 (52.7)
75%	2,700 (76.5)	2,460 (69.7)
100%	3,420 (96.8)	3,120 (88.3)

*1.5X maximum site rated fuel consumption should be used for gas supply design practices. Refer to Generac 10000046207, latest rev., for more information or contact factory for details.

COOLING

		Standby/Demand Response	Prime
Air Flow (Fan Air Flow Across Radiator)	cfm (m^3/min)	15,946 (452)	15,946 (452)
Coolant Flow	gpm (Lpm)	90 (340.7)	90 (340.7)
Coolant System Capacity	gal (L)	15 (54.9)	15 (54.9)
Maximum Operating Ambient Temperature	°F (°C)	122 (50)	122 (50)
Maximum Operating Ambient Temperature (Before Derate)		See Bulletin No. 0199270SSD	See Bulletin No. 0199270SSD
Maximum Additional Radiator Backpressure	in H_2O (kPa)	0.5 (0.12)	0.5 (0.12)

COMBUSTION AIR REQUIREMENTS

	Standby/Demand Response	Prime
Flow at rated power cfm - (m^3/min)	540 (15.3)	497 (14.1)

ENGINE

		Standby/Demand Response	Prime
Rated Engine Speed	RPM	1,800	1,800
Horsepower at Rated kW**	hp	448	403
Piston Speed	ft/min (m/min)	1,950 (594)	1,950 (594)
BMEP	psi (kPa)	227 (1,568)	205 (1,411)

** See “Emissions Data Sheet” for maximum bHP for EPA and SCAQMD permitting purposes.

EXHAUST

		Standby/Demand Response	Prime
Exhaust Flow (Rated Output)	cfm (m^3/min)	2,194 (62)	1,958 (55)
Max. Backpressure (Post Silencer)	inHG (kPa)	0.75 (2.54)	0.75 (2.54)
Exhaust Temp (Rated Output - Post Silencer)	°F (°C)	1,415 (768)	1,385 (752)

Deration – Operational characteristics consider maximum ambient conditions. Derate factors may apply under atypical site conditions.

Please contact a Generac Power Systems Industrial Dealer for additional details. All performance ratings in accordance with BS5514 and DIN6271 standards.

Standby - See Bulletin 0187500SSB • Demand Response - See Bulletin 10000018250 • Prime - See Bulletin 0187510SSB

SG300 | 14.2L | 300 kW

INDUSTRIAL SPARK-IGNITED GENERATOR SET

EPA Certified Stationary Emergency and Non-Emergency

DIMENSIONS AND WEIGHTS*

DEMAND RESPONSE READY

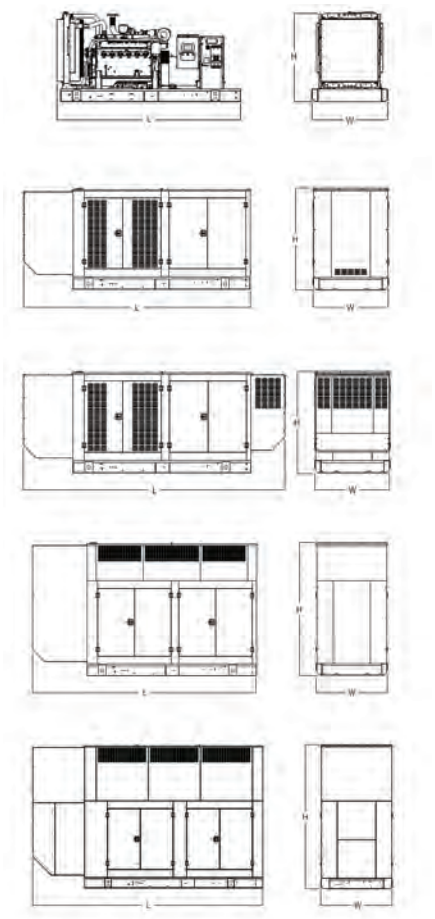

OPEN SET (Includes Exhaust Flex)

L x W x H - in (mm)	136.0 (3,454) x 57.1 (1,450) x 67.9 (1,725)
Weight - lbs (kg)	Minimum Weight: 6,200 (2,812) Maximum Weight: 6,587 (2,987)

WEATHER PROTECTED ENCLOSURE

L x W x H - in (mm)	174.7 (4,437) x 57.5 (1,461) x 77.8 (1,976)
Weight - lbs (kg)	Steel Minimum Weight: 7,535 (3,417) Steel Maximum Weight: 7,919 (3,591) Aluminum Minimum Weight: 6,978 (3,165) Aluminum Maximum Weight: 7,359 (3,337)

LEVEL 1 SOUND ATTENUATED ENCLOSURE

L x W x H - in (mm)	200.2 (5,085) x 57.5 (1,461) x 77.8 (1,976)
Weight - lbs (kg)	Steel Minimum Weight: 7,770 (3,524) Steel Maximum Weight: 8,273 (3,752) Aluminum Minimum Weight: 7,176 (3,254) Aluminum Maximum Weight: 7,625 (3,458)

LEVEL 2 SOUND ATTENUATED ENCLOSURE

L x W x H - in (mm)	180.6 (4,587) x 57.5 (1,461) x 111.3 (2,827)
Weight - lbs (kg)	Steel Minimum Weight: 8,804 (3,993) Steel Maximum Weight: 9,188 (4,167) Aluminum Minimum Weight: 7,423 (3,366) Aluminum Maximum Weight: 7,870 (3,569)

LEVEL 3 SOUND ATTENUATED ENCLOSURE

L x W x H - in (mm)	207.3 (5,265) x 63.7 (1,618) x 128.9 (3,274)
Weight - lbs (kg)	Steel Minimum Weight: 10,718 (4,861) Steel Maximum Weight: 11,080 (5,025)

* All measurements are approximate and for estimation purposes only.

YOUR FACTORY RECOGNIZED GENERAC INDUSTRIAL DEALER

Specification characteristics may change without notice. Dimensions and weights are for preliminary purposes only. Please consult a Generac Power Systems Industrial Dealer for detailed installation drawings

©2024 Generac Power Systems, Inc. All rights reserved. All specifications are subject to change without notice.
Part No. 100000
Rev. E 11/04/2024

SG400 | 21.9L | 400 kW

INDUSTRIAL SPARK-IGNITED GENERATOR SET

EPA Certified Stationary Emergency and Non-Emergency

DEMAND RESPONSE READY

Standby Power Rating
400 kW, 500 kVA, 60 Hz

Demand Response Rating
400 kW, 500 kVA, 60 Hz

Prime Power Rating
360 kW, 450 kVA, 60 Hz

*Assembled in the USA using domestic and foreign parts

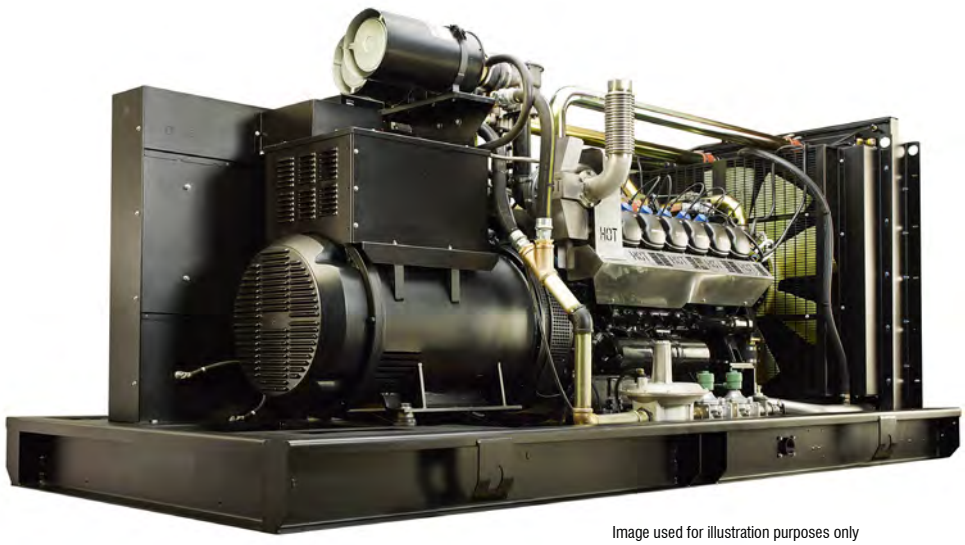

Image used for illustration purposes only

Codes and Standards

Not all codes and standards apply to all configurations. Contact factory for details.

- UL2200, UL6200, UL1236, UL489
- CSA C22.2, B149
- BS5514 and DIN 6271
- SAE J1349
- NFPA 37, 70, 99, 110
- NEC700, 701, 702, 708
- ISO 3046, 7637, 8528, 9001
- NEMA ICS10, MG1, 250, ICS6, AB1
- ANSI C62.41
- IBC 2009, CBC 2010, IBC 2012, ASCE 7-05, ASCE 7-10, ICC-ES AC-156 (2012)

Powering Ahead

Generac ensures superior quality by designing and manufacturing most of its generator components, such as alternators, enclosures, control systems and communications software. Generac also makes its own spark-ignited engines, and you'll find them on every Generac gaseous-fueled generator. We engineer and manufacture them from the block up — all at our facilities throughout Wisconsin. Applying natural gas and LP-fueled engines to generators requires advanced engineering expertise to ensure reliability, durability and necessary performance. By designing specifically for these dry, hotter-burning fuels, the engines last longer and require less maintenance. Building our own engines also means we control every step of the supply chain and delivery process, so you benefit from single-source responsibility.

Plus, Generac Industrial Power's distribution network provides all parts and service so you don't have to deal with third-party suppliers. It all leads to a positive owner experience and higher confidence level. Generac spark-ignited engines give you more options in commercial and industrial generator applications as well as extended run time from utility-supplied natural gas.

SG400 | 21.9L | 400 kW

INDUSTRIAL SPARK-IGNITED GENERATOR SET

EPA Certified Stationary Emergency and Non-Emergency

STANDARD FEATURES

DEMAND RESPONSE READY

ENGINE SYSTEM

- Oil Drain Extension
- Engine Coolant Heater
- Air Cleaner
- Stainless Steel Flexible Exhaust Connection
- Factory Filled Oil and Coolant
- Radiator Duct Adapter (Open Set Only)
- Critical Silencer

Fuel System

- NPT Fuel Connection on Frame
- Primary and Secondary Fuel Shutoff

Cooling System

- Closed Coolant Recovery System
- UV/Ozone Resistant Hoses
- Factory-Installed Radiator
- 50/50 Ethylene Glycol Antifreeze
- Radiator Drain Extension

Electrical System

- Battery Charging Alternator
- Battery Cables
- Battery Tray
- Rubber-Booted Engine Electrical Connections
- Solenoid Activated Starter Motor

ALTERNATOR SYSTEM

- UL2200 GENprotect™
- Class H Insulation Material
- 2/3 Pitch
- Skewed Stator
- Permanent Magnet Excitation
- Sealed Bearing
- Amortisseur Winding
- Full Load Capacity Alternator

GENERATOR SET

- Internal Genset Vibration Isolation
- Separation of Circuits - High/Low Voltage
- Separation of Circuits - Multiple Breakers
- Wrapped Exhaust Piping
- Standard Factory Testing
- 2 Year Limited Warranty (Standby and Demand Response Rated Units)
- 1 Year Limited Warranty (Prime Rated Units)
- Silencer Mounted in the Discharge Hood (Enclosed Units Only)

ENCLOSURE (If Selected)

- Rust-Proof Fasteners with Nylon Washers to Protect Finish
- High Performance Sound-Absorbing Material (Sound Attenuated Enclosures)
- Gasketed Doors
- Upward Facing Discharge Hoods (Radiator and Exhaust)
- Stainless Steel Lift Off Door Hinges
- Stainless Steel Lockable Handles
- RhinoCoat™ - Textured Polyester Powder Coat Paint

CONTROL SYSTEM

Power Zone® Pro Sync Controller

Program Functions

- NFPA 110 Level 1 Compliant
- Engine Protective Functions
- Alternator Protective Functions
- Digital Engine Governor Control
- Digital Voltage Regulator
- Multiple Programmable Inputs and Outputs
- Remote Display Capability
- Remote Communication via Modbus® RTU, Modbus TCP/IP, and Ethernet 10/100
- Alarm and Event Logging with Real Time Stamping
- Expandable Analog and Digital Inputs and Outputs
- Remote Wireless Software Update Capable
- Wi-Fi, Bluetooth, BMS and Remote Telemetry
- Built-In Programmable Logic Eliminates the Need for External Controllers Under Most Conditions
- Ethernet Based Communications Between Generators
- Programmable I/O Channel Properties
- Built-In Diagnostics

Protections

- Low Oil Pressure
- Low Coolant Level
- High/Low Coolant Temperature
- Sensor Failure
- Oil Temperature
- Over/Under Speed
- Over/Under Voltage
- Over/Under Frequency
- Over/Under Current
- Over Load
- High/Low Battery Voltage
- Battery Charger Current
- Phase to Phase and Phase to Neutral Short Circuits (I^2T Algorithm)

7 Inch Color Touch Screen Display

- Resistive Color Touch Screen
- Sunlight Readable (1400 NITS)
- Easily Identifiable Icons
- Multi-Lingual
- On Screen Editable Parameters
- Key Function Monitoring
- Three Phase Voltage, Amperage, kW, kVA, and kVAR
- Selectable Line to Line or Line to Neutral Measurements
- Frequency
- Engine Speed
- Engine Coolant Temperature
- Engine Oil Pressure
- Engine Oil Temperature
- Battery Voltage
- Hourmeter
- Warning and Alarm Indication
- Diagnostics
- Maintenance Events/Information

SG400 | 21.9L | 400 kW

INDUSTRIAL SPARK-IGNITED GENERATOR SET

EPA Certified Stationary Emergency and Non-Emergency

CONFIGURABLE OPTIONS

DEMAND RESPONSE READY

ENGINE SYSTEM

- ○ Baseframe Cover/Rodent Guard
- ○ Oil Heater
- ○ Air Filter Restriction Indicator
- ○ Radiator Stone Guard (Open Set Only)
- ○ Level 1 Fan and Belt Guards (Enclosed Units Only)

FUEL SYSTEM

- ○ NPT Flexible Fuel Line

ELECTRICAL SYSTEM

- ○ 10A UL Listed Battery Charger
- ○ Battery Warmer

ALTERNATOR SYSTEM

- ○ Alternator Upsizing
- ○ Anti-Condensation Heater
- ○ Tropical Coating

CIRCUIT BREAKER OPTIONS

- ○ Main Line Circuit Breaker
- ○ 2nd Main Line Circuit Breaker
- ○ Shunt Trip and Auxiliary Contact
- ○ Electronic Trip Breakers

GENERATOR SET

- ○ Demand Response Rating
- ○ Extended Factory Testing (3-Phase Only)
- ○ 12 Position Load Center

ENCLOSURE

- ○ Weather Protected Enclosure
- ○ Level 1 Sound Attenuated
- ○ Level 2 Sound Attenuated
- ○ Level 2 Sound Attenuated with Motorized Dampers
- ○ Level 3 Sound Attenuated (Steel Only)
- ○ Steel Enclosure
- ○ Aluminum Enclosure
- ○ Damper Alarm (Motorized Dampers Only)
- ○ Up to 200 MPH Wind Load Rating (Contact Factory for Availability)
- ○ AC/DC Enclosure Lighting Kit
- ○ Enclosure Heaters (Motorized Dampers Only)
- ○ Door Open Alarm Switch

CONTROL SYSTEM

- ○ NFPA 110 Compliant 21-Light Remote Annunciator
- ○ Remote Relay Assembly (8 or 16)
- ○ Oil Temperature Sender with Indication Alarm
- ○ Remote E-Stop (Break Glass-Type, Surface Mount)
- ○ Remote E-Stop (Red Mushroom-Type, Surface Mount)
- ○ Remote E-Stop (Red Mushroom-Type, Flush Mount)
- ○ 10A Engine Run Relay
- ○ Ground Fault Annunciator
- ○ 100 dB Alarm Horn
- ○ 120V GFCI and 240V Outlets

WARRANTY (Standby Gensets Only)

- ○ 2 Year Extended Limited Warranty
- ○ 5 Year Limited Warranty
- ○ 5 Year Extended Limited Warranty
- ○ 7 Year Extended Limited Warranty
- ○ 10 Year Extended Limited Warranty

ENGINEERED OPTIONS

ENGINE SYSTEM

- ○ Coolant Heater Ball Valves
- ○ Fluid Containment Pan

ALTERNATOR SYSTEM

- ○ 3rd Breaker System

CONTROL SYSTEM

- ○ Battery Disconnect Switch

GENERATOR SET

- ○ Special Testing
- ○ Battery Box

SG400 | 21.9L | 400 kW

INDUSTRIAL SPARK-IGNITED GENERATOR SET

EPA Certified Stationary Emergency and Non-Emergency

APPLICATION AND ENGINEERING DATA

DEMAND RESPONSE READY

ENGINE SPECIFICATIONS

General

Make	Generac
Cylinder #	12
Type	V12
Displacement - in^3 (L)	1,336.4 (21.9)
Bore - in (mm)	5.03 (128)
Stroke - in (mm)	5.6 (142)
Compression Ratio	10.0:1
Intake Air Method	Turbocharged/Aftercooled
Number of Main Bearings	7
Connecting Rods	Steel Alloy
Cylinder Head	Cast Iron
Cylinder Liners	Cast Steel Alloy
Ignition	Electronic
Piston Type	Cast Aluminum Alloy
Crankshaft Type	Steel
Lifter Type	Solid
Intake Valve Material	High Temp Steel Alloy
Exhaust Valve Material	High Temp Steel Alloy
Hardened Valve Seats	Proprietary Alloy

Engine Governing

Governor	Electronic
Frequency Regulation (Steady State)	±0.25%

Lubrication System

Oil Pump Type	Gear
Oil Filter Type	Full-Flow Spin on Cartridge
Crankcase Capacity - qt (L)	31.7 (30)

Cooling System

Cooling System Type	Pressurized Closed Recovery
Fan Type	Pusher
Fan Speed - RPM	1,404
Fan Diameter - in (mm)	44 (1,117.6)

Fuel System

Fuel Type	Natural Gas
Carburetor	Down Draft
Secondary Fuel Regulator	Standard
Fuel Shut Off Solenoid	Standard
Operating Fuel Pressure - in H_2O (kPa)	11 - 14 (2.7 - 3.5)
Optional Operating Fuel Pressure - in H_2O (kPa)	7 - 11 (1.7 - 2.7)

Engine Electrical System

System Voltage	24 VDC
Battery Charger Alternator	57 A
Battery Size	See Battery Index 0161970SBY
Battery Voltage	(2) - 12 VDC
Ground Polarity	Negative

ALTERNATOR SPECIFICATIONS

Standard Model	K0400124Y21
Poles	4
Field Type	Revolving
Insulation Class - Rotor	H
Insulation Class - Stator	H
Total Harmonic Distortion	<5% (3-Phase)
Telephone Interference Factor (TIF)	<52

Standard Excitation	Permanent Magnet
Bearings	Sealed Ball
Coupling	Direct via Flexible Disc
Prototype Short Circuit Test	Yes
Voltage Regulator Type	Full Digital
Number of Sensed Phases	All
Regulation Accuracy (Steady State)	±0.25%

SG400 | 21.9L | 400 kW

INDUSTRIAL SPARK-IGNITED GENERATOR SET

EPA Certified Stationary Emergency and Non-Emergency

OPERATING DATA

DEMAND RESPONSE READY

POWER RATINGS - NATURAL GAS

	Standby/Demand Response	Prime
Three-Phase 120/208 VAC @0.8pf	400 kW/500 kVA Amps: 1,390	360 kW/450 kVA Amps: 1,251
Three-Phase 120/240 VAC @0.8pf	400 kW/500 kVA Amps: 1,204	360 kW/450 kVA Amps: 1,084
Three-Phase 277/480 VAC @0.8pf	400 kW/500 kVA Amps: 602	360 kW/450 kVA Amps: 542
Three-Phase 346/600 VAC @0.8pf	400 kW/500 kVA Amps: 482	360 kW/450 kVA Amps: 434

MOTOR STARTING CAPABILITIES (skVA)

skVA vs. Voltage Dip

277/480_3PH	30%	208/240 VAC	30%
K0400124Y21	953	K0500124Y23	730
K0500124Y23	1,020	K0600124Y23	1,120
K0600124Y23	1,560		

FUEL CONSUMPTION RATES*

Natural Gas – scfh (m^3/hr)

Percent Load	Standby/Demand Response	Prime
25%	1,680 (47.6)	1,620 (45.9)
50%	2,640 (74.8)	2,460 (69.7)
75%	3,600 (101.9)	3,300 (93.4)
100%	4,620 (130.8)	4,200 (118.9)

* Fuel supply installation must accommodate fuel consumption rates at 100% load.

COOLING

		Standby/Demand Response	Prime
Air Flow (Fan Air Flow Across Radiator)	scfm (m^3/min)	28,004 (793)	28,004 (793)
Coolant Flow	gpm (Lpm)	211 (798.6)	211 (798.6)
Coolant System Capacity	gal (L)	15.5 (58.7)	15.5 (58.7)
Max. Operating Ambient Temperature	°F (°C)	122 (50)	122 (50)
Maximum Operating Ambient Temperature (Before Derate)		See Bulletin No. 0199270SSD	
Maximum Radiator Backpressure	in H_2O (kPa)	0.5 (0.12)	0.5 (0.12)

COMBUSTION AIR REQUIREMENTS

	Standby/Demand Response	Prime
Flow at Rated Power - scfm (m^3/min)	731 (20.7)	666 (18.9)

ENGINE

		Standby/Demand Response	Prime
Rated Engine Speed	RPM	1,800	1,800
Horsepower at Rated kW**	hp	589	530
Piston Speed	ft/min (m/min)	1,680 (512)	1,680 (512)
BMEP	psi (kPa)	194 (1,338)	175 (1,204)

EXHAUST

		Standby/Demand Response	Prime
Exhaust Flow (Rated Output)	scfm (m^3/min)	2,378 (67.3)	2,142 (60.7)
Max. Backpressure (Post Silencer)	inHg (kPa)	0.75 (2.54)	0.75 (2.54)
Exhaust Temp (Rated Output - Post Silencer)	°F (°C)	1,297 (702.8)	1,277 (691.7)

** Refer to "Emissions Data Sheet" for maximum bHP for EPA and SCAQMD permitting purposes.

Deration – Operational characteristics consider maximum ambient conditions. Derate factors may apply under atypical site conditions.
Please contact a Generac Power Systems Industrial Dealer for additional details. All performance ratings in accordance with ISO3046, BS5514, ISO8528, and DIN6271 standards.
Standby - See Bulletin 0187500SSB
Demand Response - See Bulletin 10000018250
Prime - See Bulletin 0187510SSB

SG400 | 21.9L | 400 kW

INDUSTRIAL SPARK-IGNITED GENERATOR SET

EPA Certified Stationary Emergency and Non-Emergency

DIMENSIONS AND WEIGHTS*

DEMAND RESPONSE READY

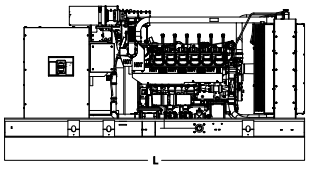

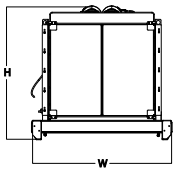

OPEN SET (Includes Exhaust Flex)

L x W x H - in (mm)	154.4 (3,922) x 71.0 (1,803) x 66.5 (1,689)
Weight - lbs (kg)	7,286 - 8,650 (3,304 - 3,923)

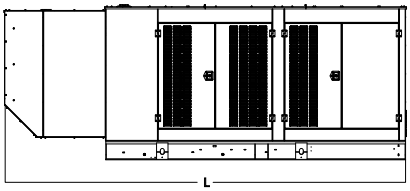

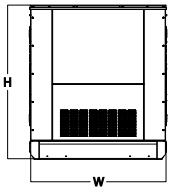

WEATHER PROTECTED ENCLOSURE

L x W x H - in (mm)	207.4 (5,268) x 71.0 (1,803) x 80.0 (2,032)
Weight - lbs (kg)	Steel: 9,490 - 10,840 (4,304 - 4,916) Aluminum: 8,404 - 9,753 (3,811 - 4,423)

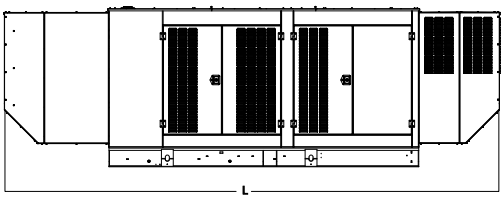

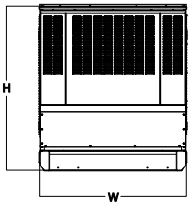

LEVEL 1 SOUND ATTENUATED ENCLOSURE

L x W x H - in (mm)	247.5 (6,287) x 71.0 (1,803) x 80.0 (2,032)
Weight - lbs (kg)	Steel: 10,498 - 11,847 (4,761 - 5,373) Aluminum: 8,818 - 10,185 (3,999 - 4,619)

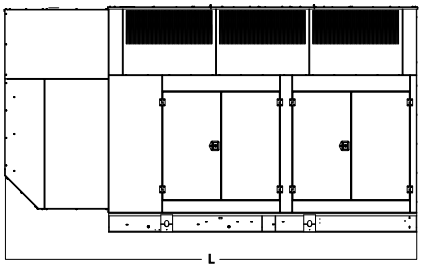

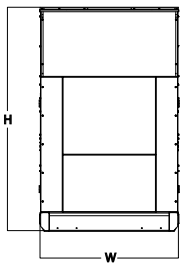

LEVEL 2 SOUND ATTENUATED ENCLOSURE

L x W x H - in (mm)	207.4 (5,268) x 71.0 (1,803) x 114.1 (2,898)
Weight - lbs (kg)	Steel: 10,836 - 12,185 (4,914 - 5,526) Aluminum: 8,963 - 10,330 (4,065 - 4,685)

LEVEL 3 SOUND ATTENUATED ENCLOSURE

L x W x H - in (mm)	232.0 (5,893) x 76.9 (1,953) x 129.2 (3,282)
Weight - lbs (kg)	13,224 - 14,285 (5,997 - 6,478)

* All measurements are approximate and for estimation purposes only.

YOUR FACTORY RECOGNIZED GENERAC INDUSTRIAL DEALER

Specification characteristics may change without notice. Dimensions and weights are for preliminary purposes only. Please contact a Generac Power Systems Industrial Dealer for detailed installation drawings.

Generac Power Systems, Inc. | P.O. Box 8 | Waukesha, WI 53189
P: (262) 544-4811 ©2019 Generac Power Systems, Inc. All rights reserved. All specifications are subject to change without notice.

Part No. 100000355
Rev. B 11/15/19

SG1000 | 49.0L | 1,000 kW

INDUSTRIAL SPARK-IGNITED GENERATOR SET

EPA Certified Stationary Emergency and Non-Emergency

DEMAND RESPONSE READY

Standby Power Rating
1,000 kW, 1,250 kVA, 60 Hz

Demand Response Rating
1,000 kW, 1,250 kVA, 60 Hz

ISO 9001:2008

USA ENGINEERED & BUILT*

*Assembled in the USA using domestic and foreign parts

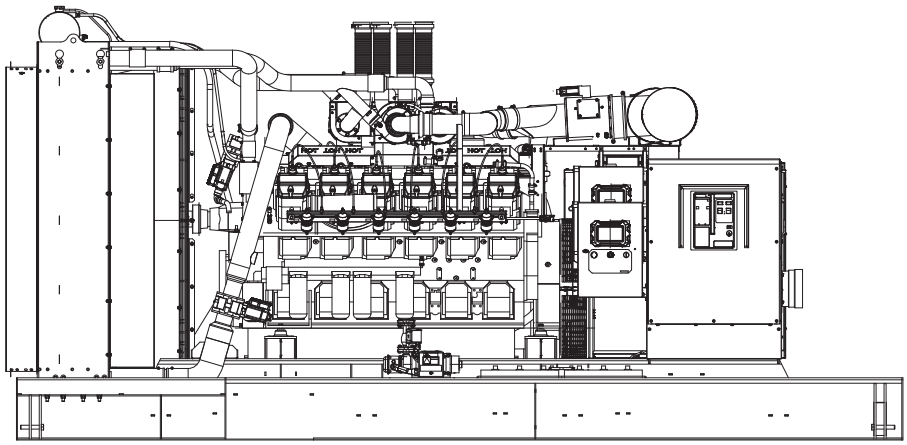

Image used for illustration purposes only

Codes and Standards

Not all codes and standards apply to all configurations. Contact factory for details.

- UL2200, UL6200, UL1236, UL489
- CSA C22.2, B149
- BS5514 and DIN 6271
- SAE J1349
- NFPA 37, 70, 99, 110
- NEC700, 701, 702, 708
- ISO 3046, 7637, 8528, 9001
- NEMA ICS10, MG1, 250, ICS6, AB1
- ANSI C62.41

Powering Ahead

Generac ensures superior quality by designing and manufacturing most of its generator components, such as alternators, enclosures, control systems and communications software. Generac also makes its own spark-ignited engines, and you'll find them on every Generac gaseous-fueled generator. We engineer and manufacture them from the block up — all at our facilities throughout Wisconsin. Applying natural gas and LP-fueled engines to generators requires advanced engineering expertise to ensure reliability, durability and necessary performance. By designing specifically for these dry, hotter-burning fuels, the engines last longer and require less maintenance. Building our own engines also means we control every step of the supply chain and delivery process, so you benefit from single-source responsibility.

Plus, Generac Industrial Power's distribution network provides all parts and service so you don't have to deal with third-party suppliers. It all leads to a positive owner experience and higher confidence level. Generac spark-ignited engines give you more options in commercial and industrial generator applications as well as extended run time from utility-supplied natural gas.

SG1000 | 49.0L | 1,000 kW

INDUSTRIAL SPARK-IGNITED GENERATOR SET

EPA Certified Stationary Emergency and Non-Emergency

STANDARD FEATURES

DEMAND RESPONSE READY

ENGINE SYSTEM

- Oil Drain Extension
- Heavy Duty Air Cleaner
- Level 1 Fan and Belt Guards (Open Set Only)
- Stainless Steel Flexible Exhaust Connection
- Radiator Duct Adapter (Open Set Only)
- Critical Silencer/Catalyst
- Coolant Heater Ball Valves
- Factory Filled Oil and Coolant
- Oil Temperature Sender with Indication Alarm

FUEL SYSTEM

- Primary and Secondary Fuel Shutoff

COOLING SYSTEM

- Closed Coolant Recovery System
- Factory-Installed Radiator
- Radiator Drain Extension
- 50/50 Ethylene Glycol Antifreeze

ELECTRICAL SYSTEM

- Battery Charging Alternator
- Battery Cables
- Battery Tray
- Rubber-Booted Engine Electrical Connections
- Solenoid Activated Starter Motor

ALTERNATOR SYSTEM

- UL2200 GENprotect™
- Class H Insulation Material
- 2/3 Pitch
- Skewed Stator
- Permanent Magnet Excitation
- Sealed Bearings
- Amortisseur Winding
- Low Temperature Rise (<120 °C)

GENERATOR SET

- Spring Isolators Under Frame
- Separation of Circuits - High/Low Voltage
- Separation of Circuits - Multiple Breakers
- Standard Factory Testing
- 2 Year Limited Warranty (Standby or Demand Response Rated Units)
- Ready to Accept Load in <10 Seconds

ENCLOSURE (If Selected)

- Structural Steel Sub-Base
- Sub-Base Lifting Eyes
- Enamel Finish
- Zinc Plated Fasteners
- Zinc Plated Cast Aluminum Keylock Door Handles
- Heavy Duty Stainless Steel Hinges
- Modular Construction
- Rhino Coat™ - Textured Polyester Powder Coat Paint

CONTROL SYSTEM

Power Zone® Pro Sync Controller

- NFPA 110 Level 1 Compliant
- Engine Protective Functions
- Alternator Protective Functions
- Digital Engine Governor Control
- Digital Voltage Regulator
- Multiple Programmable Inputs and Outputs
- Remote Display Capability
- Remote Communication via Modbus® RTU, Modbus TCP/IP, and Ethernet 10/100
- Alarm and Event Logging with Real Time Stamping
- Expandable Analog and Digital Inputs and Outputs
- Remote Wireless Software Update Capable
- BMS and Remote Telemetry
- Built-In Programmable Logic Eliminates the Need for External Controllers Under Most Conditions
- Ethernet Based Communications Between Generators
- Programmable I/O Channel Properties
- Built-In Diagnostics
- Arc Flash Maintenance Mode (When Properly Equipped)

Alarms and Warnings

- Low Oil Pressure
- Low Coolant Level
- High/Low Coolant Temperature
- Sensor Failure
- Oil Temperature
- Over/Under Speed
- Over/Under Voltage
- Over/Under Frequency
- Over/Under Current
- Over Load
- High/Low Battery Voltage
- Battery Charger Current
- Phase to Phase and Phase to Neutral Short Circuits (I^2T Algorithm)

7 Inch Color Touch Screen Display

- Resistive Color Touch Screen
- Sunlight Readable (1400 NITS)
- Easily Identifiable Icons
- Multi-Lingual
- On Screen Editable Parameters
- Key Function Monitoring
- Three Phase Voltage, Amperage, kW, kVA, and kVAr
- Selectable Line to Line or Line to Neutral Measurements
- Frequency
- Engine Speed
- Engine Coolant Temperature
- Engine Oil Pressure
- Engine Oil Temperature
- Battery Voltage
- Hourmeter
- Warning and Alarm Indication
- Diagnostics
- Maintenance Events/Information

SG1000 | 49.0L | 1,000 kW

INDUSTRIAL SPARK-IGNITED GENERATOR SET

EPA Certified Stationary Emergency and Non-Emergency

CONFIGURABLE OPTIONS

DEMAND RESPONSE READY

ENGINE SYSTEM

- ○ Engine Coolant Heater
- ○ Oil Heater
- ○ Level 1 Fan and Belt Guards (Enclosed Units Only)
- ○ Two Stage Air Cleaner
- ○ Air Filter Restriction Indicator
- ○ Radiator Stone Guard (Open Set Only)
- ○ Baseframe Cover/Rodent Guard

ELECTRICAL SYSTEM

- ○ 20A UL Listed Battery Charger
- ○ Battery Warmer

FUEL SYSTEM

- ○ NPT Flexible Fuel Line

ALTERNATOR SYSTEM

- ○ Alternator Upsizing
- ○ Anti-Condensation Heater

CIRCUIT BREAKER OPTIONS

- ○ Up to 4 Main Line Circuit Breaker Selection
- ○ Shunt Trip and Auxiliary Contact
- ○ Electronic Trip Breaker

GENERATOR SET

- ○ Spring Vibration Isolator
- ○ Extended Factory Testing (3-Phase Only)
- ○ 24 Position Load Center

ENCLOSURE

- ○ Level 0 Sound Attenuated
- ○ Level 1 Sound Attenuated
- ○ Level 2 Sound Attenuated
- ○ Level 2 Sound Attenuated with Motorized Dampers
- ○ Steel Enclosure
- ○ Aluminum Enclosure
- ○ AC/DC Enclosure Lighting Kit
- ○ Enclosure Heater (With Motorized Dampers Only)
- ○ Up to 180 MPH Wind Load Rating (Contact Factory for Availability)

CONTROL SYSTEM

- ○ NFPA 110 Level 1 Compliant 21-Light Remote Annunciator
- ○ Remote Output Relays (8 or 16)
- ○ Remote E-Stop (Break Glass-Type, Surface Mount)
- ○ Remote E-Stop (Red Mushroom-Type, Surface Mount)
- ○ Remote E-Stop (Red Mushroom-Type, Flush Mount)
- ○ 10A Engine Run Relay
- ○ Ground Fault Annunciator
- ○ Damper Alarm Contacts (With Motorized Dampers Only)
- ○ 100 dB Alarm Horn
- ○ 120V GFCI and 240V Outlets

WARRANTY (Standby Gensets Only)

- ○ 2 Year Extended Limited Warranty
- ○ 5 Year Limited Warranty
- ○ 5 Year Extended Limited Warranty
- ○ 7 Year Extended Limited Warranty
- ○ 10 Year Extended Limited Warranty

ENGINEERED OPTIONS

CONTROL SYSTEM

- ○ Additional Spare Inputs/Outputs
- ○ Battery Disconnect Switch

ALTERNATOR SYSTEM

- ○ Unit Mounted Load Banks
- ○ Medium Voltage Alternators

ENCLOSURE

- ○ Door Open Alarm Horn

GENERATOR SET

- ○ Special Testing
- ○ Battery Boxes

SG1000 | 49.0L | 1,000 kW

INDUSTRIAL SPARK-IGNITED GENERATOR SET

EPA Certified Stationary Emergency and Non-Emergency

APPLICATION AND ENGINEERING DATA

DEMAND RESPONSE READY

ENGINE SPECIFICATIONS

General

Make	Generac
Cylinder #	12
Type	V
Displacement - in^3 (L)	2,992 (49.03)
Bore - in (mm)	6.69 (170)
Stroke - in (mm)	7.09 (180)
Compression Ratio	10.0:1
Intake Air Method	Turbocharged/Aftercooled
Number of Main Bearings	7
Number of Connecting Rods	12
Cylinder Head	4 Valve
Cylinder Liners	Yes
Ignition	MotorTech
Piston Type	Cast Aluminum Alloy
Crankshaft Type	Chromium Molybdenum Steel SCM440H
Lifter Type	Solid
Intake Valve Material	Proprietary Alloy
Exhaust Valve Material	Proprietary Alloy
Hardened Valve Seats	Proprietary Alloy

Engine Governing

Governor	Electronic
Frequency Regulation (Steady State)	±0.25%

Lubrication System

Oil Pump Type	Gear Driven
Oil Filter Type	Full Flow Spin-On Cartridge
Crankcase Capacity with Filter - qt (L)	285 (270)

Cooling System

Cooling System Type	Forced Circulation by Centrifugal Pump
Fan Type	Pusher
Fan Speed - RPM	1,025
Fan Diameter - in (mm)	76 (1,930)

Fuel System

Fuel Type	Natural Gas
Carburetor	Variable Venturi
Secondary Fuel Regulator	Standard
Fuel Shut Off Solenoid	Standard
Operating Fuel Pressure - in H_2O (kPa)	14 - 28 (3.5 - 7.0)

Engine Electrical System

System Voltage	24 VDC
Battery Charger Alternator	Standard
Battery Size	See Battery Index 0161970SBY
Battery Voltage	(4) - 12 VDC
Ground Polarity	Negative

ALTERNATOR SPECIFICATIONS

Standard Model	K1248064N22
Poles	4
Field Type	Rotating
Insulation Class - Rotor	H
Insulation Class - Stator	H
Total Harmonic Distortion	<5%
Telephone Interference Factor (TIF)	<50

Standard Excitation	Permanent Magnet
Bearings	Single
Coupling	Flexible Plates
Prototype Short Circuit Test	Yes
Voltage Regulator Type	Full Digital
Number of Sensed Phases	All
Regulation Accuracy (Steady State)	±0.5%

SG1000 | 49.0L | 1,000 kW

INDUSTRIAL SPARK-IGNITED GENERATOR SET

EPA Certified Stationary Emergency and Non-Emergency

OPERATING DATA

DEMAND RESPONSE READY

POWER RATINGS - NATURAL GAS

	Standby/Demand Response	
Three-Phase 277/480 VAC @0.8pf	1,000 kW/1,250 kVA	Amps: 1,505
Three-Phase 346/600 VAC @0.8pf	1,000 kW/1,250 kVA	Amps: 1,204

MOTOR STARTING CAPABILITIES (skVA)

skVA vs. Voltage Dip

277/480 VAC	30%
K1248064N22	3,300
K1344064N22	4,000
K1500064N22	4,500

FUEL CONSUMPTION RATES*

Natural Gas – scfh (m^3/hr) at Standard Conditions 68 °F (20 °C), 14.7 psi (101 kPa)

Percent Load	Standby/Demand Response
25%	3,418 (96.8)
50%	6,021 (170.5)
75%	8,655 (245.1)
100%	11,243 (318.4)

* Fuel supply installation must accommodate fuel consumption rates at 100% load.

COOLING

		Standby/Demand Response
Air Flow (Fan Air Flow Across Radiator) - Open Set	cfm (m^3/min)	57,846 (1,638)
Coolant Flow	gpm (Lpm)	489 (1,850)
Coolant System Capacity	gal (L)	80 (303)
Maximum Operating Ambient Temperature	°F (°C)	122 (50)
Maximum Operating Ambient Temperature (Before Derate)		See Bulletin No. 0199270SSD
Maximum Additional Radiator Backpressure	in H_2O (kPa)	0.5 (0.12)

COMBUSTION AIR REQUIREMENTS

	Standby/Demand Response
Flow at Rated Power - cfm (m^3/min)	2,205 (62.4)

ENGINE

		Standby/Demand Response
Rated Engine Speed	RPM	1,800
Horsepower at Rated kW**	hp	1,467
Piston Speed	ft/min (m/min)	2,126 (648)
BMEP	psi (kPa)	216 (1,488)

EXHAUST

		Standby/Demand Response
Exhaust Flow (Rated Output)	cfm (m^3/min)	8,500 (241)
Maximum Allowable Exhaust Backpressure (Post Silencer)	inHg (kPa)	0.73 (2.49)
Exhaust Temperature (Rated Output)	°F (°C)	1,458 (792)

** Refer to "Emissions Data Sheet" for maximum bHP for EPA and SCAQMD permitting purposes.

Deration – Operational characteristics consider maximum ambient conditions. Derate factors may apply under atypical site conditions.
Please contact a Generac Power Systems Industrial Dealer for additional details. All performance ratings in accordance with ISO3046, BS5514, ISO8528, and DIN6271 standards.
Standby - See Bulletin 0187500SSB
Demand Response - See Bulletin 10000018250

SG1000 | 49.0L | 1,000 kW

INDUSTRIAL SPARK-IGNITED GENERATOR SET

EPA Certified Stationary Emergency and Non-Emergency

DIMENSIONS AND WEIGHTS*

DEMAND RESPONSE READY

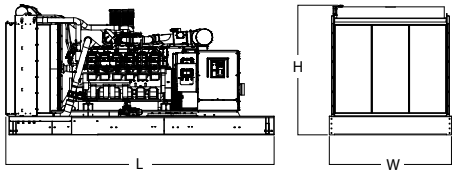

OPEN SET

L x W x H - in (mm)	220.3 (5,597) x 102.0 (2,590) x 108.1 (2,745)
Weight - lbs (kg)	22,798 - 24,495 (10,334 - 11,114)

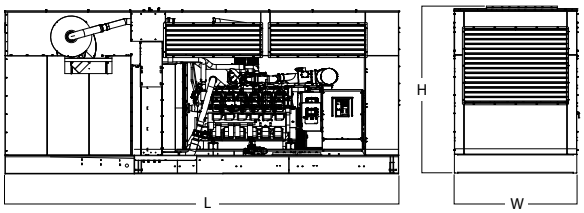

LEVEL 0 SOUND ATTENUATED ENCLOSURE

L x W x H - in (mm)	329.3 (8,356) x 105.8 (2,688) x 136.9 (3,477)
Weight - lbs (kg)	Steel - 26,558 - 28,256 (12,050 - 12,820) Aluminum - 24,092 - 25,789 (10,931 - 11,701)

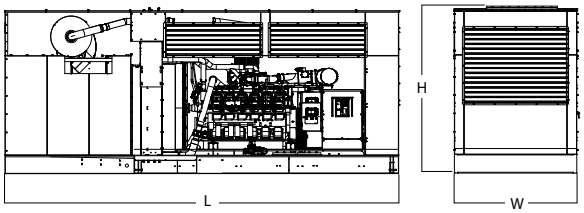

LEVEL 1 SOUND ATTENUATED ENCLOSURE

L x W x H - in (mm)	329.3 (8,356) x 105.8 (2,688) x 136.9 (3,477)
Weight - lbs (kg)	Steel - 27,801 - 29,499 (12,614 - 13,384) Aluminum - 25,337 - 27,034 (11,496 - 12,266)

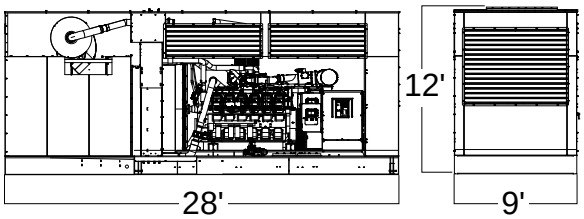

LEVEL 2 SOUND ATTENUATED ENCLOSURE

L x W x H - in (mm)	329.3 (8,356) x 105.8 (2,688) x 136.9 (3,477)
Weight - lbs (kg)	Steel - 29,697 - 31,394 (13,474 - 14,244) Aluminum - 26,279 - 27,976 (11,923 - 12,693)

L x W x H ---> 28' x 9' x 12'

* All measurements are approximate and for estimation purposes only.

YOUR FACTORY RECOGNIZED GENERAC INDUSTRIAL DEALER

Specification characteristics may change without notice. Please contact a Generac Power Systems Industrial Dealer for detailed installation drawings.

Generac Power Systems, Inc. | P.O. Box 8 | Waukesha, WI 53189
P: (262) 544-4811 ©2022 Generac Power Systems, Inc. All rights reserved. All specifications are subject to change without notice.

Part No. A0000863[illegible]
Rev. B 07/06/2022

Product Data

AquaEdge® High-Efficiency Semi-Hermetic Centrifugal Liquid Chillers

150 to 700 Nominal Tons
(527 to 2,461 kW)

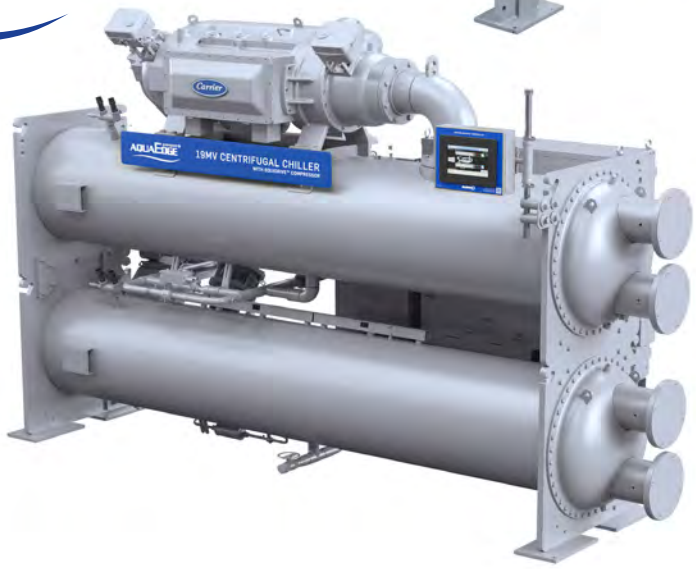

19MV 50/60 Hz
High-Efficiency Semi-Hermetic Centrifugal Liquid Chillers with Greenspeed® Intelligence, PIC6 Controls, and Ultra Low GWP PUREtec™ R-1234ze(E) or Low GWP R-513A or R-515B Refrigerant

© 2024 Carrier

Features/Benefits

The 19MV AquaEdge® chillers offer:

- Ultra low GWP PUREtec™ R-1234ze(E) or Low GWP R-513A or R-515B Refrigerant
- Two-stage back-to-back EquiDrive™ semi-hermetic compressor 150 to 700 tons (527 to 2,461 kW)
- Dual EXV (19MV3 only), variable orifice metering device
- Air cooled variable speed drive
- Positive pressure design with compact footprint
- Modular construction
- Carrier offers a five-year refrigerant warranty (Domestic and Canada only)
- Magnetic and roller element bearing options (Roller element bearing available on 19MV3 only)

The AquaEdge chiller's high efficiencies are obtained in real-world operating conditions. Therefore, the effects of potential or indirect global warming are greatly diminished.

High efficiency

Today's owners of chilled water plants demand high efficiency from their chillers. As a result, the AquaEdge centrifugal chiller is offered as a variable-speed machine with a unit-mounted variable speed drive and permanent magnet motor to maximize part load efficiency.

Environmental leadership

Carrier has long been committed to the environment and its sustainability. AquaEdge chillers provide our customers with a high-efficiency, chlorine-free solution. Carrier's decision to utilize ultra low GWP PUREtec™ R-1234ze(E) or low GWP R-513A or R-515B refrigerant provides our customers with a safer and more environmentally balanced choice without compromising efficiency.

Reliability

The AquaEdge chiller's two-stage positive pressure EquiDrive back-to-back compressor, coupled with ASME (American Society of Mechanical Engineers) constructed heat exchangers, ensures high reliability and sustainability. Carrier's semi-hermetic motors operate in a clean, refrigerant cooled environment. The semi-hermetic design eliminates the potential shaft seal leaks and refrigerant loss. These are just some of the reasons why the AquaEdge family of chillers has one of the industry's lowest leak rates.

The AquaEdge chiller's two-stage positive pressure EquiDrive back-to-back compressor, coupled with ASME constructed heat exchangers, ensures high reliability.

Operating range

The 19MV chiller's EquiDrive two-stage back-to-back compressor provides MORe (More Operating Range) and high efficiency at design conditions, providing the flexibility to operate outside of design conditions to keep your building cool under pressure including operation down to 10% load without hot gas bypass (select models).

In addition the 19MV chiller's frequent start feature and dual EXVs sized to enable low lift operation at full load make the 19MV an ideal fit for chilled water systems with an integrated water side economizer.

Semi-hermetic compressor features

Magnetic bearings are integrated into the direct drive motor assembly. Motor is semi-hermetically sealed from the machine room; cooling is accomplished by spraying liquid refrigerant on the motor windings.

This highly efficient motor cooling method results in the use of smaller, cooler-running motors than could be realized with air-cooled designs of the same type.

In addition, Carrier's semi-hermetic design eliminates:

- Compressor shaft seals that require maintenance and increase the likelihood of refrigerant leaks
- Shaft alignment problems that occur with open-drive designs during start-up and operation, when equipment temperature variations cause thermal expansion
- High noise levels that are common with air-cooled motors, which radiate noise to the mechanical room and adjacent areas
- Mechanical room cooling requirements associated with air-cooled motors, which dissipate heat to the mechanical room

Optional shipment with factory charge for

The AquaEdge 19MV chiller can be shipped fully charged, minimizing start-up and maintenance time. Purge units are not required. The tight construction of the AquaEdge 19MV centrifugal chiller ensures that contaminants stay out and efficiency is maintained throughout the life of the chiller. The oil free design enables the AquaEdge 19MV chillers to be shipped with a full refrigerant charge without the need for isolation valves.

NOTE: Factory charge is only available for R-513A and R-515B. R-1234ze(E) refrigerant requires field charge.

Table of contents

	Page
Features/Benefits	2
Model Number Nomenclature	5
Chiller Components	6
Physical Data	12
Options and Accessories	12
Dimensions	14
Selection Procedure	17
Controls	18
Application Data	20
Guide Specifications	32

Features/Benefits (cont)

Positive pressure design

The AquaEdge chiller's positive pressure design reduces the chiller size by up to 35% compared to low-pressure designs. The smaller size minimizes the need for valuable mechanical room floor space. In addition, positive pressure designs eliminate the need for costly low-pressure containment devices, reducing the initial cost of the system.

Modular construction

The AquaEdge 19MV chiller is designed to fit through a 72 in. by 80 in. opening completely assembled (heat exchanger frame sizes 3 and 4, standard tier VFD). For smaller spaces, the evaporator, condenser, and compressor assemblies are completely bolted together, making the AquaEdge chillers ideally suited for replacement projects where ease of disassembly and reassembly at the jobsite are essential.

Marine container shipment (19MV, heat exchanger frame sizes 3 and 4 only, standard tier VFD)

The compact design allows for open-top container shipment to export destinations, ensuring product quality while reducing shipping cost.

Compressors are 100% run-tested to ensure proper operation of all compressor systems, including vibration, electrical, and compression.

Air-cooled VFD (variable frequency drive) is designed to be cooled without cooling water or refrigerant. Enclosure reduces the risk of exposure of electrical components to dirt, dust, moisture and splashing water. Using air instead of water also eliminates costly maintenance associated with the water cooling pump, heat exchanger, and rubber tubing used with water-cooled VFDs.

High-efficiency permanent magnet motor provides high efficiency at full and part loads.

Heat exchanger features

The American Society of Mechanical Engineers (ASME) standard requires the use of an independent agency to certify the design, manufacture, and testing of all heat exchangers, ensuring the ultimate in heat exchanger safety, reliability, and long life. Optional 1 in. tubes provide optimized cost and less pressure drop than the standard 3/4 in. tubes. Tube expansion at center support sheets prevents unwanted tube movement and vibration, thereby reducing the possibility of premature tube failure. Double-grooved tube sheet holes reduce the possibility of leaks between the water and refrigerant system, increasing product reliability. Condenser baffle prevents direct impingement of high velocity compressor gas onto the condenser tubes. The baffle eliminates related vibration and wear of the tubes and distributes the refrigerant flow evenly over the length of the vessel for improved efficiency. Closely spaced intermediate support sheets prevent tube sagging and vibration, thereby increasing heat exchanger life.

Refrigerant filter drier isolation valves allow filter replacement without pumping down the chiller, which means less service time and less expense.

The Sensible Subcooler located in the bottom of the condenser increases the refrigeration effect by cooling condensed liquid refrigerant to a lower temperature, resulting in reduced compressor power consumption.

Dual Expansion Valves (EXV) (19MV3 only) provide precise refrigerant metering over a wide variety of operating conditions. As a result, optimal refrigerant levels can be maintained in the condenser and evaporator to achieve the greatest efficiency without unintentional hot gas bypass or flooding. The dual EXVs provide full capacity (up to 700 tons) at low lift conditions.

Microprocessor control features

The 10.4 in. native BACnet®[1] touchscreen direct digital Product Integrated Control (PIC6) provides unmatched flexibility, functionality, and seamless integration with the Carrier i-Vu® Building Automation and Control System supporting BACnet and Carrier Comfort Network® (CCN) communication protocols. The PIC6 control can be configured to display units in English or metric, and offers an "all-in-one" view of key chiller operational data, simplifying the interaction between the chiller and user.

Features include:

- Display of over 125 operating, status, and diagnostic messages for improved user experience
- Monitoring of over 100 functions and parameters to protect the chiller from abnormal conditions
- Modular pull-out/plug-in design, reducing wiring requirements and providing easy installation
- Low-voltage (24-v) design, providing the ultimate assurance of personal safety and control integrity
- Display mode uses English and Chinese.

Automatic capacity override function unloads the compressor whenever key safety limits are approached, increasing unit life.

Chilled water reset can be accomplished manually or automatically from the building management system. Reset saves energy when warmer chilled water can be used. Demand limiting feature limits the power draw of the chiller during peak loading conditions. When incorporated into the Carrier Comfort Network building automation system, a red line command holds chillers at their present capacity and prevents any other chillers from starting. If a load shed signal is received, the compressors are unloaded to avoid high demand charges whenever possible.

Ramp loading ensures a smooth pulldown of water loop temperature and prevents a rapid increase in compressor power consumption during the pulldown period.

Automated controls test can be executed prior to start-up to verify that the entire control system is functioning properly.

The 365-day real time clock feature allows the operator to program a yearly schedule for each week, weekends, and holidays.

Occupancy schedules can be programmed into the controller to ensure that the chiller only operates when cooling is required.

Extensive service menu features include password protection to prevent unauthorized access to the service menu. Built-in diagnostic capabilities assist in troubleshooting and recommend proper corrective action for pre-set alarms, resulting in greater operating time.

Alarm file maintains the last 25 time and date-stamped alarm and alert messages in memory; this function reduces troubleshooting time and cost. Configuration data backup in nonvolatile memory provides protection during power failures and eliminates time-consuming control reconfiguration.

1. Third-party trademarks and logos are property of their respective owners.

Features/Benefits (cont)

Refrigeration Cycle

19MV Refrigeration Cycle (Economized)

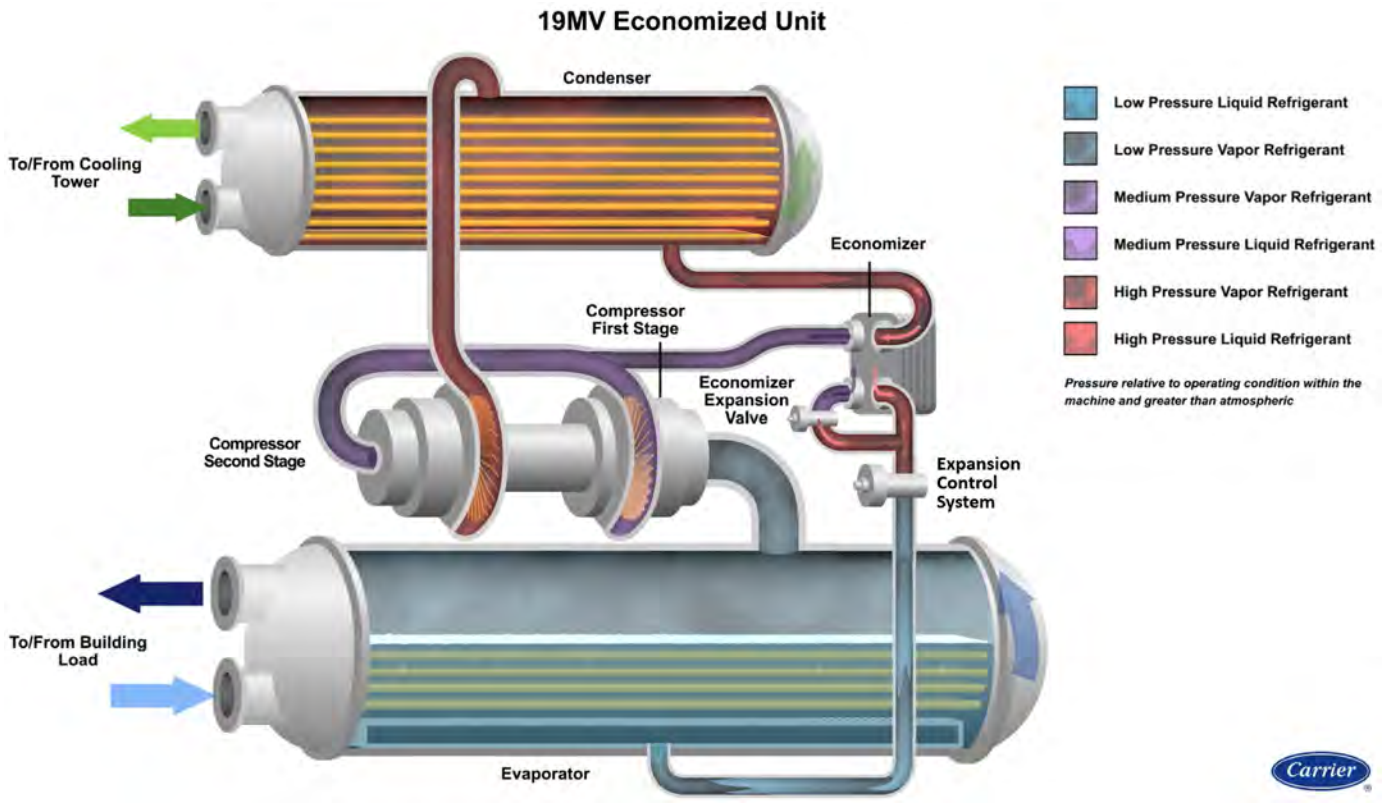

19MV Refrigeration Cycle (Non-Economized)

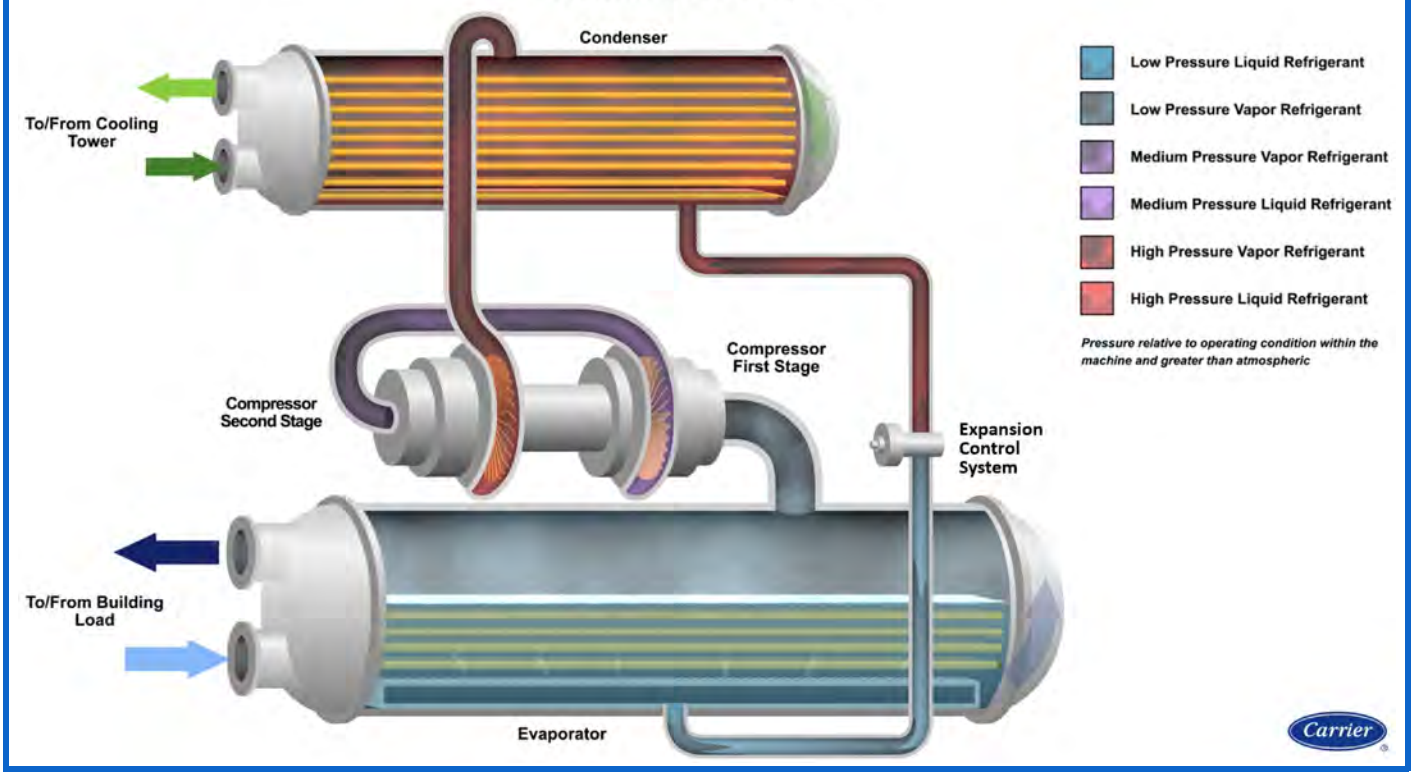

Model number nomenclature

19MV Two-Stage Compressor

19	MV	–	4	1	N	4	1	N	3	6	9	E	7	5	–

Description
19 — High Efficiency Semi-Hermetic Centrifugal Liquid Chiller

MV — Model Designation

Bearing Option
– — Magnetic Bearing
R — Roller Element Bearing

Evaporator Frame Size
1 — Frame 1
2 — Frame 2
3 — Frame 3
4 — Frame 4
5 — Frame 5

Evaporator Length
1 — 11 ft (3.4 m) Length
3 — 13 ft (4 m) Length

Evaporator Pass Arrangement and Tube Count
E — 3 pass, 3/4" tube, Lowest Tube Count
F — 3 pass, 3/4" tube, Medium Tube Count
G — 3 pass, 3/4" tube, Highest Tube Count
L — 1 or 2 pass, 3/4" tube, Lowest Tube Count
M — 1 or 2 pass, 3/4" tube, Medium Tube Count
N — 1 or 2 pass, 3/4" tube, Highest Tube Count

R — 3 pass, 1" tube, Lower-Medium Tube Count
S — 3 pass, 1" tube, Medium Tube Count
T — 3 pass, 1" tube, Medium-Higher Tube Count
X — 1 or 2 pass, 1" tube, Lowest Tube Count
Y — 1 or 2 pass, 1" tube, Medium Tube Count
Z — 1 or 2 pass, 1" tube, Highest Tube Count

Condenser Frame Size
1 — Frame 1
2 — Frame 2
3 — Frame 3
4 — Frame 4
5 — Frame 5

Condenser Length
1 — 11 ft (3.4 m) Length
3 — 13 ft (4 m) Length

Special Code
– — Standard
S — Special

Voltage Code

Code	Volts-Phase-Hertz
3	380-3-60
4	416-3-60
5	460-3-60
9	400-3-50

Motor Code
3 — Smallest HP
5 — Medium HP
7 — Large HP

Economizer Option
E — Economizer Included
N — No Economizer

Compressor Impeller Diameter Code
9

Compressor Shroud Code
3
4
5
6
7 (Frame 3 Only)
8 (Frame 3 Only)

Compressor Frame Size
2 — 150-350 Nominal Tons (527-1,230 kW)
3 — 300-700 Nominal Tons (1,055-2,462 kW)

Condenser Pass Arrangement and Tube Count
C — 3 pass, 3/4" tube, Lowest Tube Count
D — 3 pass, 3/4" tube, 2nd Lowest Tube Count
F — 3 pass, 3/4" tube, 2nd Highest Tube Count
G — 3 pass, 3/4" tube, Highest Tube Count
K — 1 or 2 pass, 3/4" tube, Lowest Tube Count
L — 1 or 2 pass, 3/4" tube, 2nd Lowest Tube Count
M — 1 or 2 pass, 3/4" tube, 2nd Highest Tube Count
N — 1 or 2 pass, 3/4" tube, Highest Tube Count
P — 1 or 2 pass, 3/4" tube, Highest Tube Count (Condenser Frame 2 only)

AHRI (Air-Conditioning, Heating, and Refrigeration Institute) Performance Certified

A1 Refrigerant only applies to R-513A and R-515B units

Quality Assurance

ISO 9001:2015-certified processes

Compressor Components

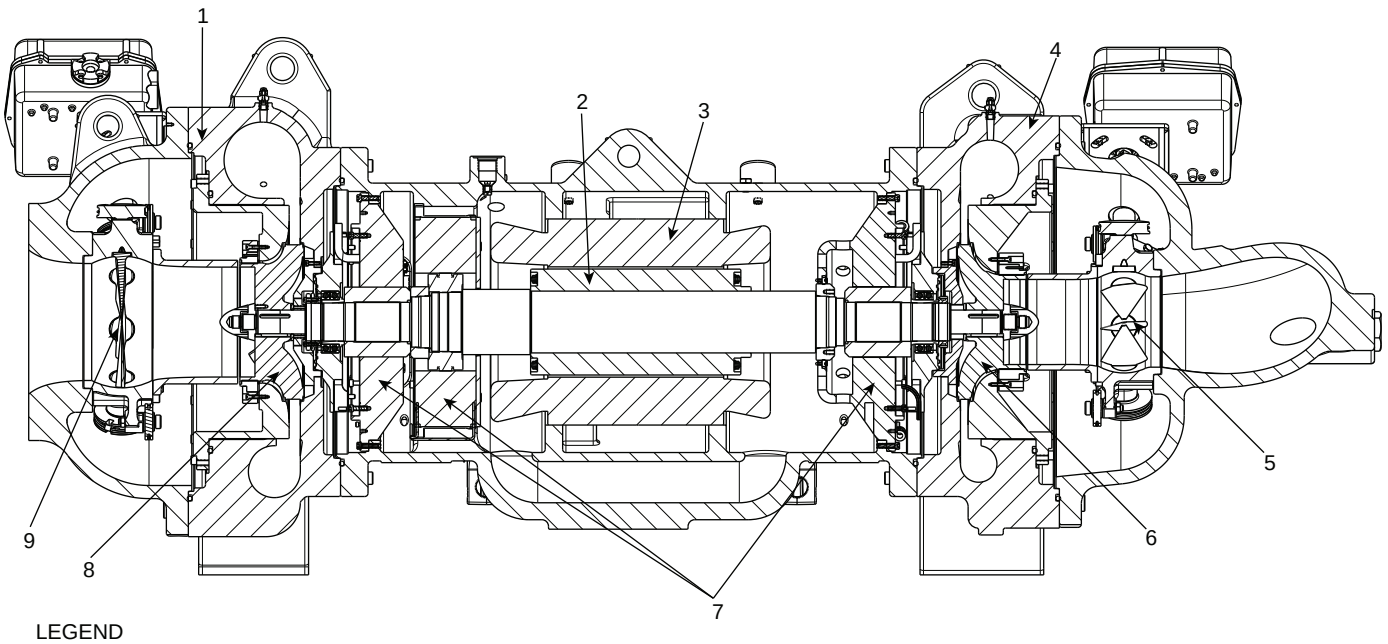

LEGEND
1 — First Stage Volute
2 — Permanent Magnet Motor Rotor
3 — Motor Stator
4 — Second Stage Volute
5 — Second Stage Inlet Guide Vane
6 — Second Stage Impeller
7 — Magnetic Bearing System
8 — First Stage Impeller
9 — First Stage Inlet Guide Vane

Compressor Components (cont)

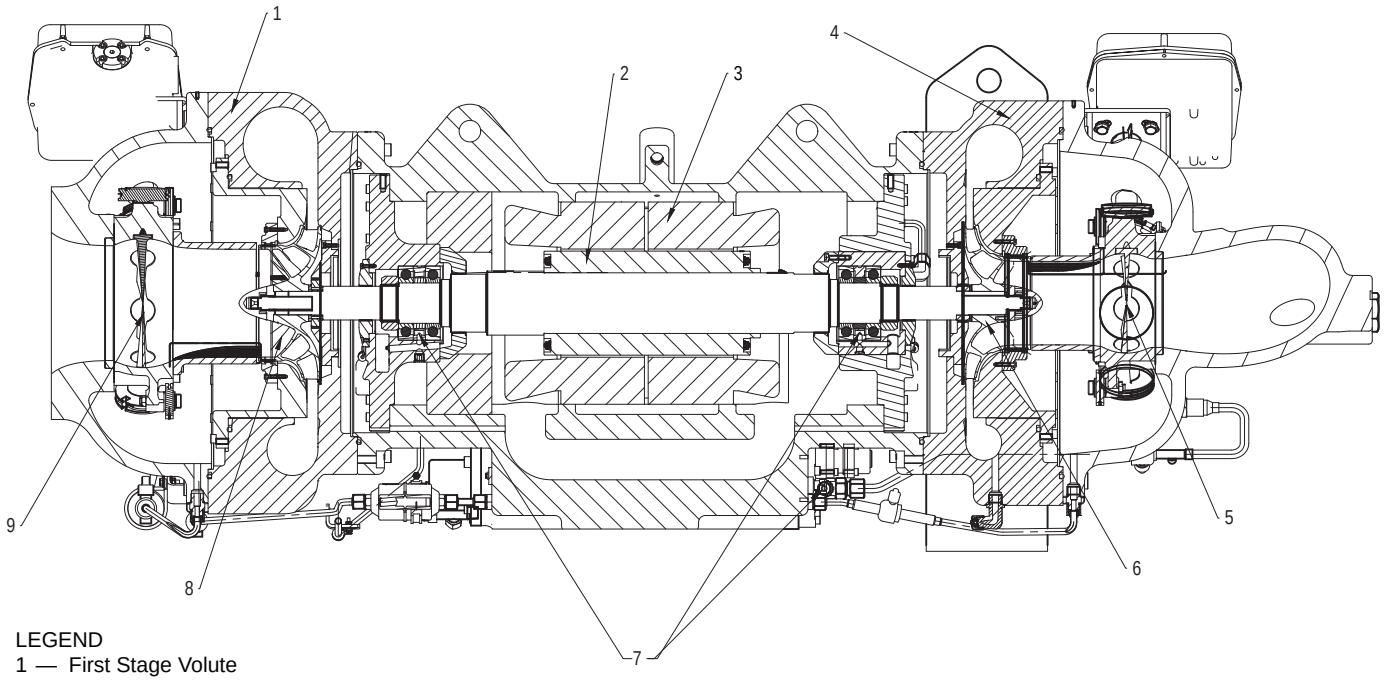

LEGEND
1 — First Stage Volute
2 — Permanent Magnet Motor Rotor
3 — Motor Stator
4 — Second Stage Volute
5 — Second Stage Inlet Guide Vane
6 — Second Stage Impeller
7 — Oil Bearing System
8 — First Stage Impeller
9 — First Stage Inlet Guide Vane

Chiller Components — 19MV Standard Tier Option

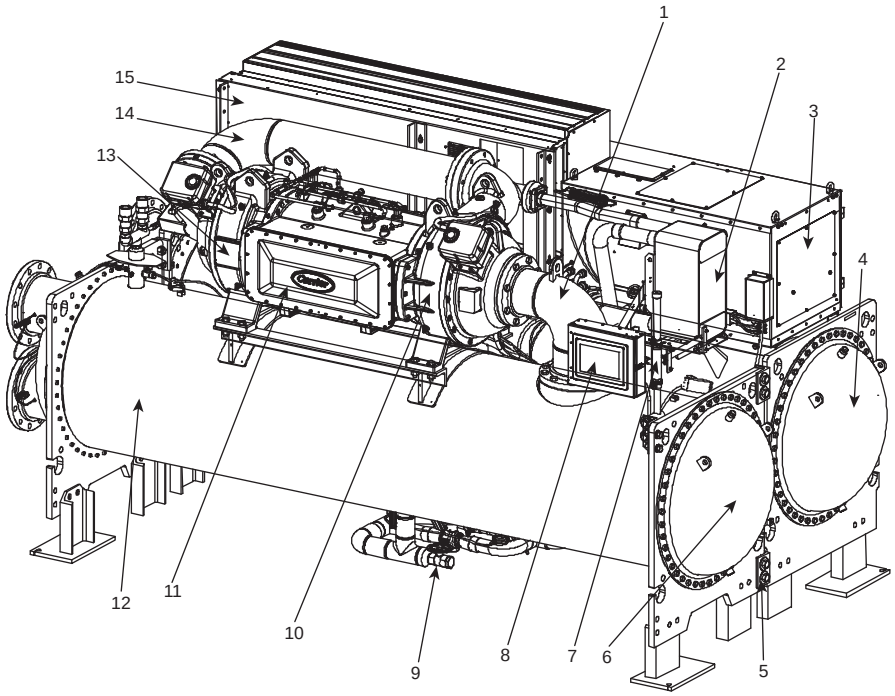

LEGEND

1 — Suction Elbow First Stage
2 — Refrigerant Economizer
3 — Integrated Power and Control Panel
4 — Condenser Waterbox Return End
5 — Bolt Together Plate
6 — Evaporator Waterbox Return End
7 — HMI Adjustment Arm
8 — 10.4 in. Color Touchscreen Display
9 — Refrigerant Charging Valve
10 — EquiDrive* Two-Stage Back-to-Back Centrifugal Compressor
11 — Permanent Magnet Motor (hidden)
12 — Evaporator
13 — Magnetic Bearing System
14 — Interstage Compressor Piping
15 — VFD (Variable Frequency Drive)

* Third-party trademarks and logos are property of their respective owners.

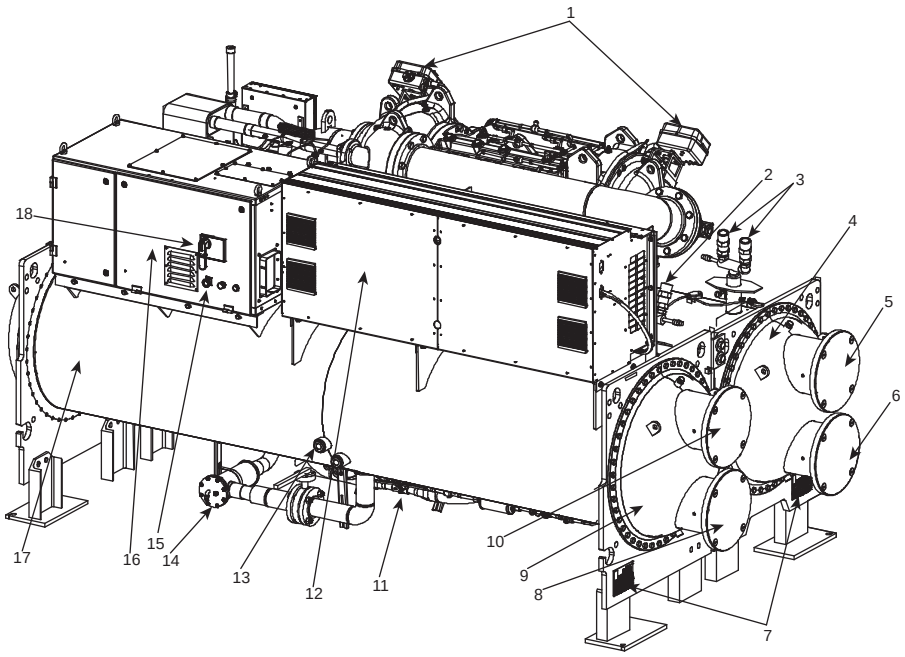

LEGEND

1 — Dual Inlet Guide Vane Actuators
2 — Condenser Dual Relief Valves
3 — Evaporator Dual Relief Valves
4 — Evaporator Waterbox
5 — Leaving Evaporator Nozzle
6 — Entering Evaporator Nozzle
7 — ASME Nameplates
8 — Entering Condenser Nozzle
9 — Condenser Waterbox
10 — Leaving Condenser Nozzle
11 — Dual Electronic Expansion Valves
12 — VFD (Variable Frequency Drive)
13 — Condenser Sight Glasses
14 — Strainer
15 — E-stop
16 — Integrated Power and Control Panel
17 — Condenser
18 — Main Circuit Breaker

Chiller Components — 19MVR Standard Tier Option (19MV3 Only)

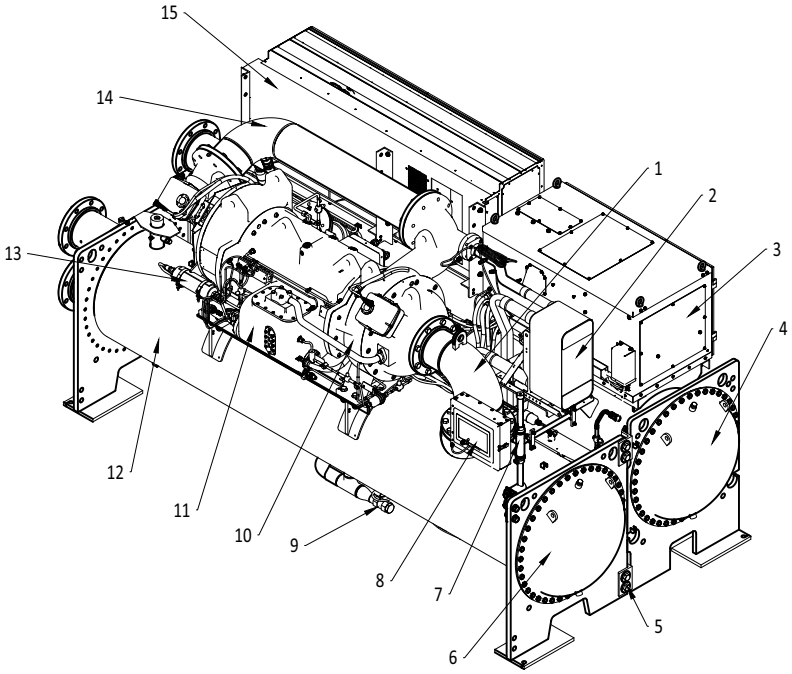

LEGEND

1 — Suction Elbow First Stage
2 — Refrigerant Economizer
3 — Integrated Power and Control Panel
4 — Condenser Waterbox Return End
5 — Bolt Together Plate
6 — Evaporator Waterbox Return End
7 — HMI Adjustment Arm
8 — 10.4 in. Color Touchscreen Display
9 — Refrigerant Charging Valve
10 — EquiDrive* Two-Stage Back-to-Back Centrifugal Compressor
11 — Permanent Magnet Motor (hidden)
12 — Evaporator
13 — Oil Bearing System
14 — Interstage Compressor Piping
15 — VFD (Variable Frequency Drive)

* Third-party trademarks and logos are property of their respective owners.

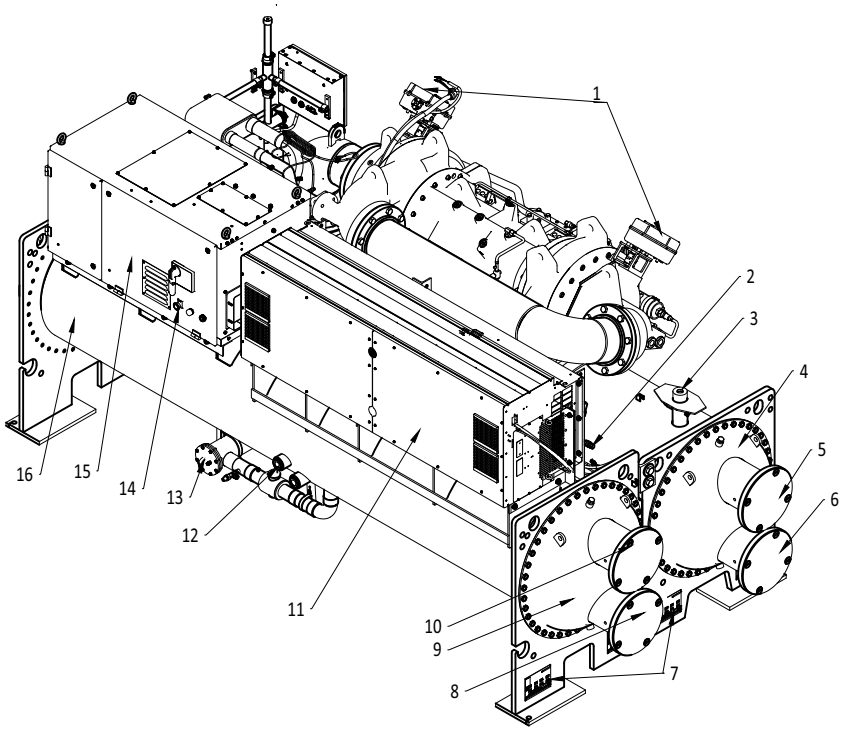

LEGEND

1 — Dual Inlet Guide Vane Actuators
2 — Condenser Dual Relief Valves
3 — Evaporator Relief Valve
4 — Evaporator Waterbox
5 — Leaving Evaporator Nozzle
6 — Entering Evaporator Nozzle
7 — ASME Nameplates
8 — Entering Condenser Nozzle
9 — Condenser Waterbox
10 — Leaving Condenser Nozzle
11 — VFD (Variable Frequency Drive)
12 — Condenser Sight Glasses
13 — Strainer
14 — E-stop
15 — Integrated Power and Control Panel
16 — Condenser

Chiller Components — 19MV2 Standard Tier Option

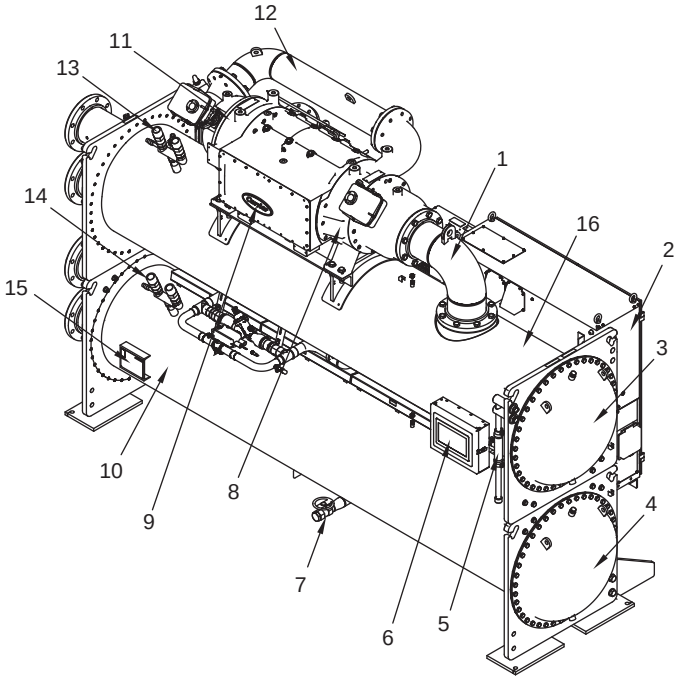

LEGEND

1 — Suction Elbow First Stage
2 — Integrated Power and Control Panel
3 — Condenser Waterbox Return End
4 — Evaporator Waterbox Return End
5 — HMI Adjustment Arm
6 — 10.4 in. Color Touchscreen Display
7 — Refrigerant Charging Valve
8 — EquiDrive Two-stage Back-to-Back Centrifugal Compressor
9 — Permanent Magnet Motor (hidden)
10 — Condenser
11 — Magnetic Bearing System
12 — Interstage Compressor Piping
13 — Evaporator Dual Relief Valves
14 — Condenser Dual Relief Valves
15 — ASME Nameplate
16 — Evaporator

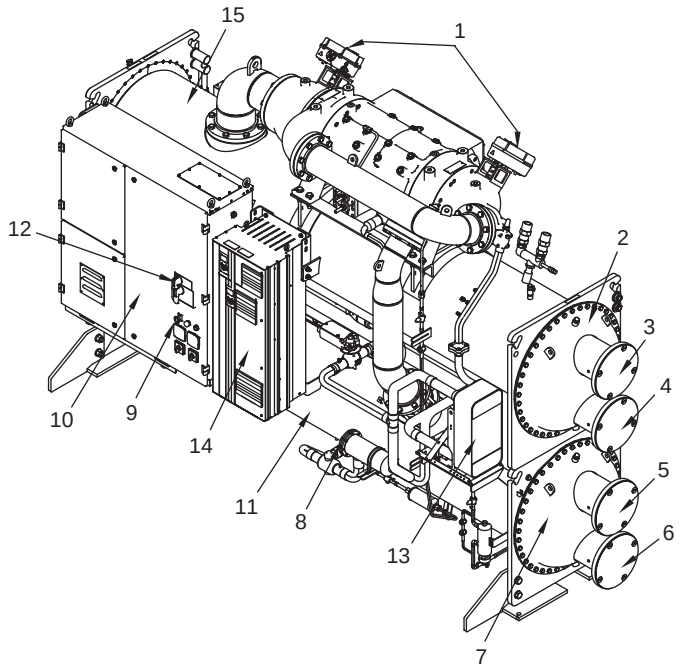

LEGEND

1 — Dual Inlet Guide Vane Actuators
2 — Evaporator Waterbox
3 — Leaving Evaporator Nozzle
4 — Entering Evaporator Nozzle
5 — Leaving Condenser Nozzle
6 — Entering Condenser Nozzle
7 — Condenser Waterbox
8 — Strainer
9 — E-stop
10 — Integrated Power and Control Panel
11 — Condenser
12 — Main Circuit Breaker
13 — Refrigerant Economizer
14 — VFD (Variable Frequency Drive)
15 — Evaporator

Chiller Components — High Tier Option (19MV-3 Only)

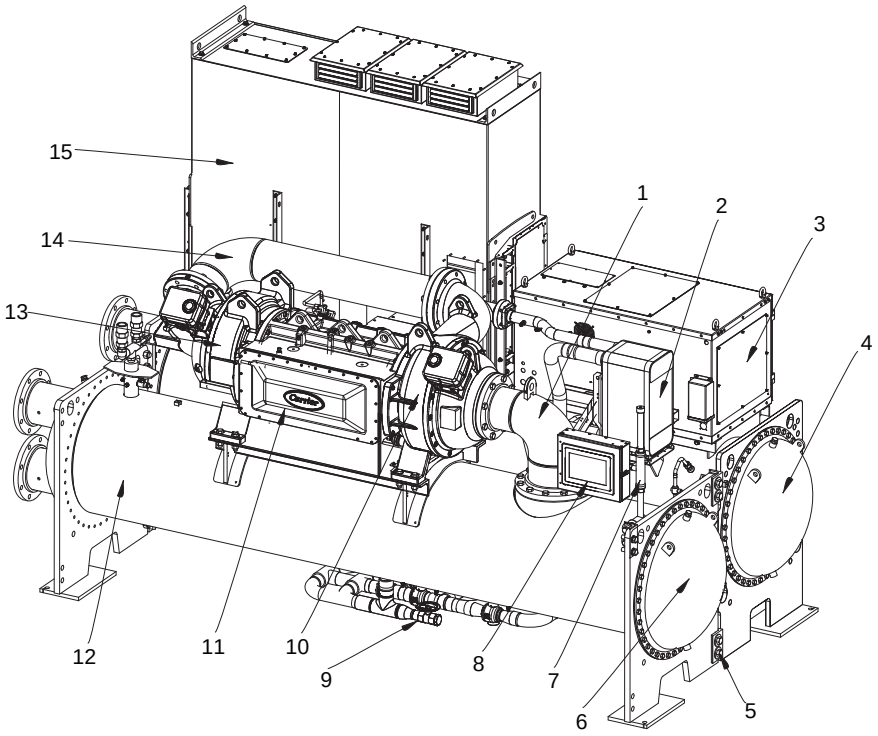

LEGEND
1 — Suction Elbow First Stage
2 — Refrigerant Economizer
3 — Integrated Power and Control Panel
4 — Condenser Waterbox Return End
5 — Bolt Together Plate
6 — Evaporator Waterbox Return End
7 — HMI Adjustment Arm
8 — 10.4 in. Color Touchscreen Display
9 — Refrigerant Charging Valve
10 — EquiDrive* Two-Stage Back-to-Back Centrifugal Compressor
11 — Permanent Magnet Motor (hidden)
12 — Evaporator
13 — Magnetic Bearing System
14 — Interstage Compressor Piping
15 — VFD (Variable Frequency Drive)

* Third-party trademarks and logos are property of their respective owners.

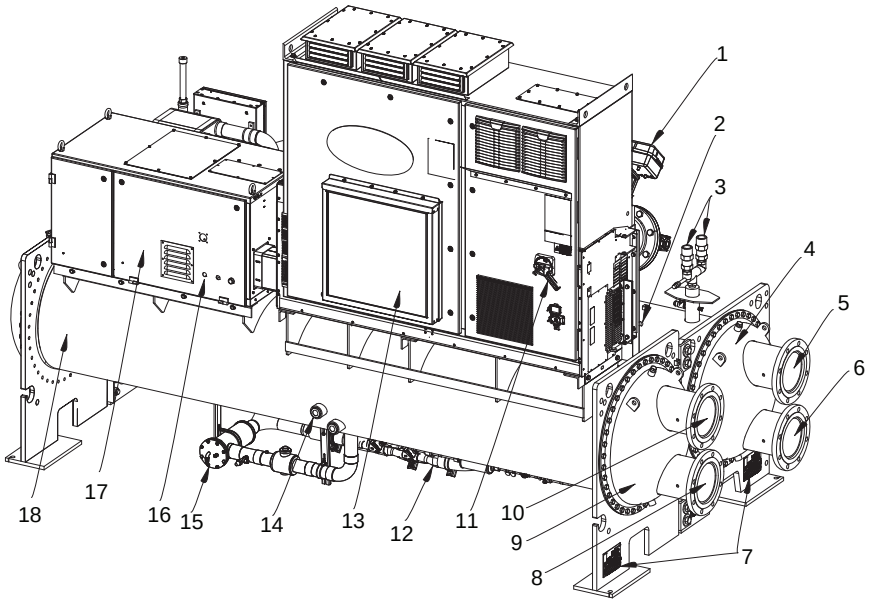

LEGEND
1 — Dual Inlet Guide Vane Actuators
2 — Condenser Dual Relief Valves
3 — Evaporator Dual Relief Valves
4 — Evaporator Waterbox
5 — Leaving Evaporator Nozzle
6 — Entering Evaporator Nozzle
7 — ASME Nameplates
8 — Entering Condenser Nozzle
9 — Condenser Waterbox
10 — Leaving Condenser Nozzle
11 — Main Circuit Breaker
12 — Dual Electronic Expansion Valves
13 — VFD (Variable Frequency Drive)
14 — Condenser Sight Glasses
15 — Strainer
16 — E-stop
17 — Integrated Power and Control Panel
18 — Condenser

19MV chiller weight

The weight of a 19MV chiller is best obtained by running the chiller selection software. The 19MV has an extensive number of possible combinations of evaporators (including tubing type and length), condensers (including tubing type and length), waterbox types (taking into account heat exchanger passes), compressors, motors, and system accessories. The 19MV selection software will determine the rigging weight, operating weight, corner weight, and spring deflection (if applicable) of any configured unit. Due to rigging and installation considerations, there are times when it becomes necessary to determine the contribution of individual components that comprise the chiller. For these situations, a detailed component breakdown is provided in the 19MV Installation Instructions.

Options and accessories

ITEM	OPTION (FACTORY-INSTALLED)	ACCESSORY (FIELD-INSTALLED)
2 Pass Evaporator Water-Side Construction	X	
2 Pass Condenser Water-Side Construction	X	
Thermal Insulation (except Waterbox Covers)	X	
Marine Waterboxes 150 psig (1034 kPa)[a]	X	
Flanged Evaporator and/or Condenser Waterbox Nozzles[b]	X	
Economizer Assembly (refrigerant circuit)	X	
0.025, 0.028, 0.035 in. (0.635, 0.711 or 0.889 mm) Internally, Externally Enhanced Copper Tubing – Evaporator	X	
0.025, 0.028, 0.035 in. (0.635, 0.711 or 0.889 mm) Internally, Externally Enhanced Copper Tubing – Condenser	X	
Roller Element Bearing (19MV3 Only)	X	
High Tier VFD (for Harmonic Mitigation) (19MV3 Only)	X	
Customer Factory Performance Testing	X	
Extended Warranty (North America only)	X	
BluEdge Service Agreement		X
BluEdge Digital		X
Soleplate Package		X
Spring Isolator		X
Multiple Chiller System Remote Temperature Sensor		X
Freestanding Harmonic Filter		X

NOTE(S):

a. Optional marine waterboxes are available for 19MV, 2 pass only. Standard waterboxes for 19MV are nozzle-in-head type, 150 psig (1034 kPa).
b. Standard waterbox nozzles are Victaulic type. Flanged nozzles are available as an option with either nozzle-in-head type waterboxes or marine waterboxes.

Unit-Mounted VFD Features and Options[a]

ITEM	STANDARD (S) / OPTIONAL (O)
Microprocessor Based Overload Trip Protection	S
Main Power Fuse	S: 100kA
Phase Loss/Reversal Imbalance Protection	S
Three-Phase Ground Fault Protection	S
Three-Phase Over/Under Voltage Protection	S
Lightning Surge Arrestor (MOV)	O
Harmonic Mitigation	O

NOTE(S):

a. Low voltage: phase to phase and phase to ground.

19MV3 Recommended Clearances — Standard Tier Option

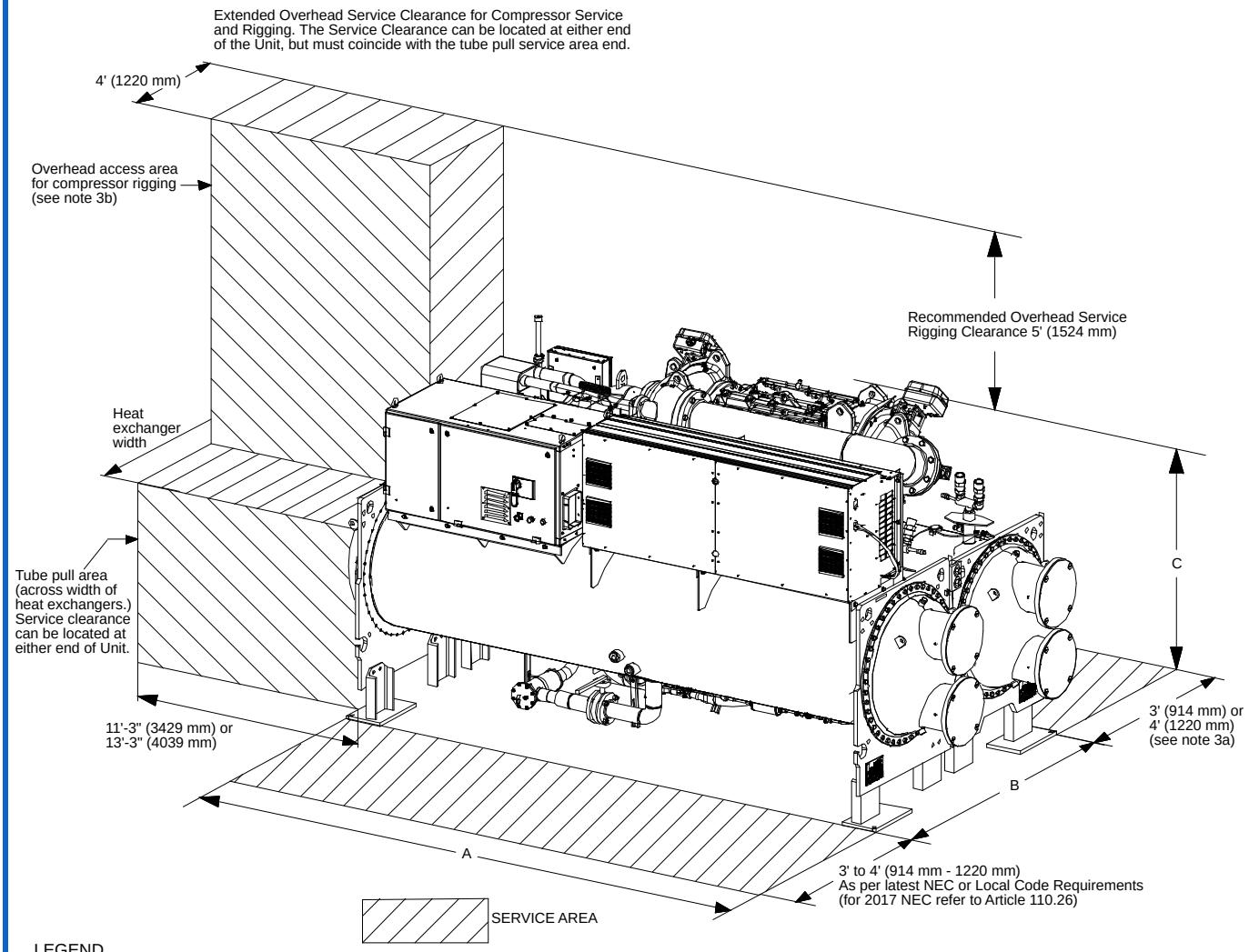

LEGEND

A — Length
B — Width
C — Height

NOTE(S):

1. Dished head (NIH) waterbox shown.
2. Service areas are minimum space required.
3. For compressor service either:
   a. Allow 4' (1220 mm) on the evaporator side of the chiller.
   b. Provide free space above the tube pull area equal to the height of chiller plus 5' (1524 mm). The overhead rigging space will allow the tube pull area to be utilized for service and must therefore coincide with the tube pull service area end.
4. For actual unit dimensions, contact your Carrier sales professional for certified drawings.
5. Pressure relief device sizing is based on the assumption that there are no combustible materials within 20 ft (7.7 m) of the pressure vessels.
6. If the service clearances are not met, extraordinary actions to perform equipment repairs will not be covered by warranty.

19MV2 Recommended Clearances — Standard Tier Option

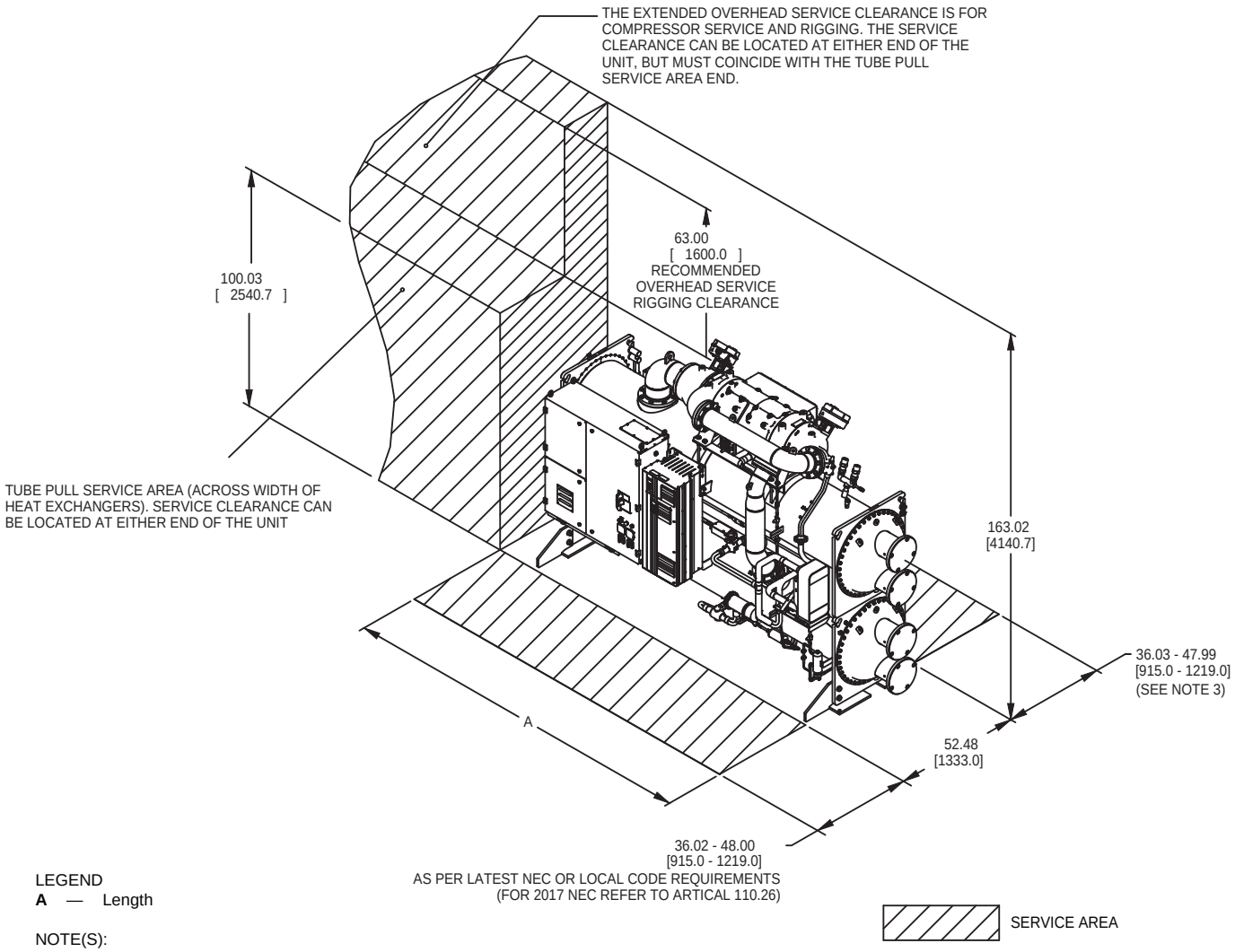

LEGEND

A — Length

NOTE(S):

1. Dished head (NIH) waterbox shown.
2. Service areas are minimum space required.
3. Allow 48" [1219 mm] on either side of the chiller.
4. Provide free space above the tube pull area equal to the height of the chiller plus 63" [1600 mm]. The overhead rigging space will allow the tube pull area to be utilized for service area.
5. For actual unit dimensions, contact your Carrier sales professional for certified drawings.
6. If the service clearances are not met, extraordinary actions to perform equipment repairs will not be covered by warranty.

19MV3 Recommended Clearances — High Tier Option

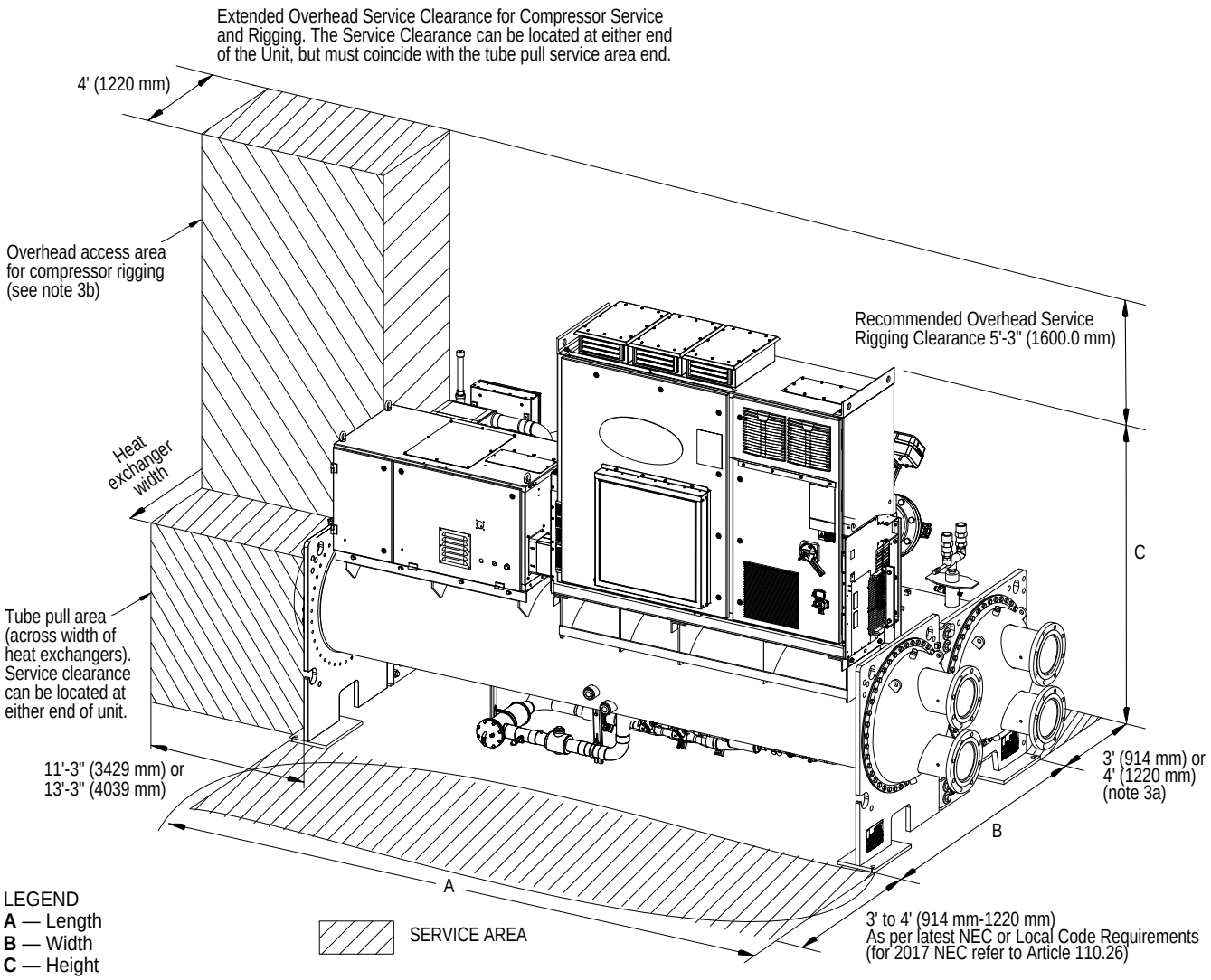

LEGEND
A — Length
B — Width
C — Height

NOTES:
1. For reference, unit shown is HighTier VFD.
2. Dished head (NIH) waterbox shown.
3. Service areas are minimum space required.
4. For compressor service either:
   a. Allow 4' (1220 mm) on the evaporator side of the chiller.
   b. Provide free space above the tube pull area equal to the height of chiller plus 5' (1524 mm). The overhead rigging space will allow the tube pull area to be utilized for service and must therefore coincide with the tube pull service area end.
5. For actual unit dimensions, contact your Carrier sales professional for certified drawings.

Nozzle Size

FRAME SIZE	TYPE	DESIGN PRESSURE	PASSES	NOMINAL PIPE SIZE (in.)		ACTUAL PIPE ID (in.)	
				EVAPORATOR	CONDENSER	EVAPORATOR	CONDENSER
2	NIH	150	2	8	8	7.981	7.981
	MARINE	150	2	6	6	6.065	6.065
3	NIH	150	2	8	8	7.981	7.981
	MARINE	150	2	8	8	7.981	7.981
4	NIH	150	2	8	8	7.981	7.981
	MARINE	150	2	8	8	7.981	7.981
5	NIH	150	2	10	10	10.02	10.02
	MARINE	150	2	10	10	10.02	10.02

Selection procedure

The 19MV chiller can be tailored to the specific requirements of a given application. Please contact your local Carrier representative for a selection. The NG eCAT selection software analyzes many factors, including specific temperature, fluid type, and flow requirements to automatically configure the chiller's heat exchanger size, compressor aerodynamic model, and electrical sizing to deliver a chiller optimized to the job requirements.

Heat exchangers

Flow rate

If the evaporator flow is variable, the rate of change of flow should not exceed 30% per minute.

Water quality

Please consult your local Carrier representative and/or a local water quality expert.

Microprocessor controls

The microprocessor control system matches the capacity of the chiller to the cooling load while providing state-of-the-art chiller protection. The microprocessor-based control center protects the chiller by monitoring the digital and analog inputs and executing capacity overrides or safety shutdowns as necessary.

The system controls cooling load within the set point (plus or minus the dead band) by sensing the water or brine temperature and regulating the inlet guide vanes and regulating VFD speed.

Features

Control system

The control system on each 19MV centrifugal chiller is native BACnet, factory mounted, wired, and tested to ensure machine protection and efficient capacity control. In addition, the program logic ensures proper starting, stopping, and recycling of the chiller and seamlessly integrates with Carrier's i-Vu Building Automation Control System, supporting BACnet and Carrier Comfort Network (CCN) communication protocols. The PIC6 control system consists of one main control board and up to four IOBs (input/output board modules). All boards communicate via an internal LEN bus. The main control board is supplied from a 24 vac supply reference to earth ground. In the event of a power supply interrupt, the unit can restart automatically without the need for an external command. However, any faults active when the supply is interrupted are saved, and may in certain cases prevent a circuit or unit from restarting. IOBs are supplied from a 24 vac supply reference to earth ground. Always separate communication cables from other cables and always run wiring as directly as possible.

Sensors

Pressure transducers

Pressure transducers measure and control the pressures in the unit. These electronic sensors deliver 0 to 5 vdc. The transducers can be calibrated through the controller. The pressure transducers are connected to the IOBs. See the Pressure Transducers table.

Pressure Transducers

PRESSURE	TRANSDUCER PURPOSE
Evaporator	Measure Evaporator Pressure
Condenser	Measure Condenser Pressure
Economizer	Measure Economizer Pressure

Temperature sensors

The system uses electronic sensors to measure and control the temperatures in the unit. There are three types of temperature sensors: 5K thermistor, 10K thermistor, and RTD (resistance temperature detector), 100 ohm, 3-wire based on IOB channel configurations. The temperature sensor range is –40°F (–40°C) to 245°F (118°C). See the Temperature Sensors table.

Temperature Sensors

TEMPERATURE SENSOR	PURPOSE
Entering Chilled Water	Measure Entering Evaporator Water Temperature
Leaving Chilled Water	Measure Leaving Evaporator Water Temperature
Entering Condenser Water	Measure Entering Condenser Water Temperature
Leaving Condenser Water	Measure Leaving Condenser Water Temperature
Evaporator Refrigerant Liquid	Measure Evaporator Refrigerant Liquid Temperature
Compressor Discharge	Measure Compressor Discharge Temperature
Radial Bearing Temp Sensor	Measure Radial Bearing Temperature
Inboard Thrust Bearing Temp Sensor	Measure Inboard Thrust Bearing Temperature
Outboard Thrust Bearing Temp Sensor	Measure Outboard Thrust Bearing Temperature
Bearing Controller Temp Sensor	Measure Bearing Controller Temperature
Motor Winding Temperature Sensors	Measure Temperature Of Compressor Motor Windings
Oil Sump Temp Sensor[a]	Measure Oil Sump Temperature
Bearing oil supply temperature[a]	Measure Oil Sump Discharge Temperature

NOTE(S):

a. 19MVR option only.

Controls outputs

Evaporator/condenser water pump

The controller can stop and start an evaporator/condenser water pump.

Inlet guide vanes

The inlet guide vanes adjust the refrigerant vapor flow into the compressor to adapt to change in the operating conditions of the machine. To adjust the refrigerant flow, the guide vanes open or close to vary the cross-section of the refrigerant path. The high degree of accuracy with which the guide vanes are positioned ensures that the flow of refrigerant is precisely controlled.

Expansion control system valve

The expansion control system valve is set in conjunction with dual EXVs to ensure smooth, proper operation as the chiller unloads across its operating profile.

VFD

The VFD modifies motor voltage input and frequency to allow the chiller to react to changing lift conditions. Additionally, it allows compressor start-up and, along with inlet guide vanes, provides capacity control.

Safety cutouts

- Guide vane calibration not completed
- Guide vane fault
- High bearing temperature
- High motor temperature
- High discharge temperature
- Low refrigerant temperature
- High evaporator pressure
- Under voltage
- Over voltage
- Intermittent power loss
- VFD configuration conflict
- High pressure switch
- Low liquid level
- Compressor starter faults
- Compressor surge protection
- Evaporator freeze protection
- Ground fault

User interface and web connection

The PIC6 Human Machine Interface (HMI) is a color 10.4 in. touch screen. Navigation is either direct from the touch screen interface or by connecting to a web interface at the Ethernet IP port of the controller. The navigation menus are the same for both connection methods. To access the PIC6 user interface, enter the IP address of the unit in the address bar of your web browser. The IP address can be viewed or changed from the PIC6 interface.

19MV3 Chiller with Unit-Mounted VFD Diagram — Standard Tier Option

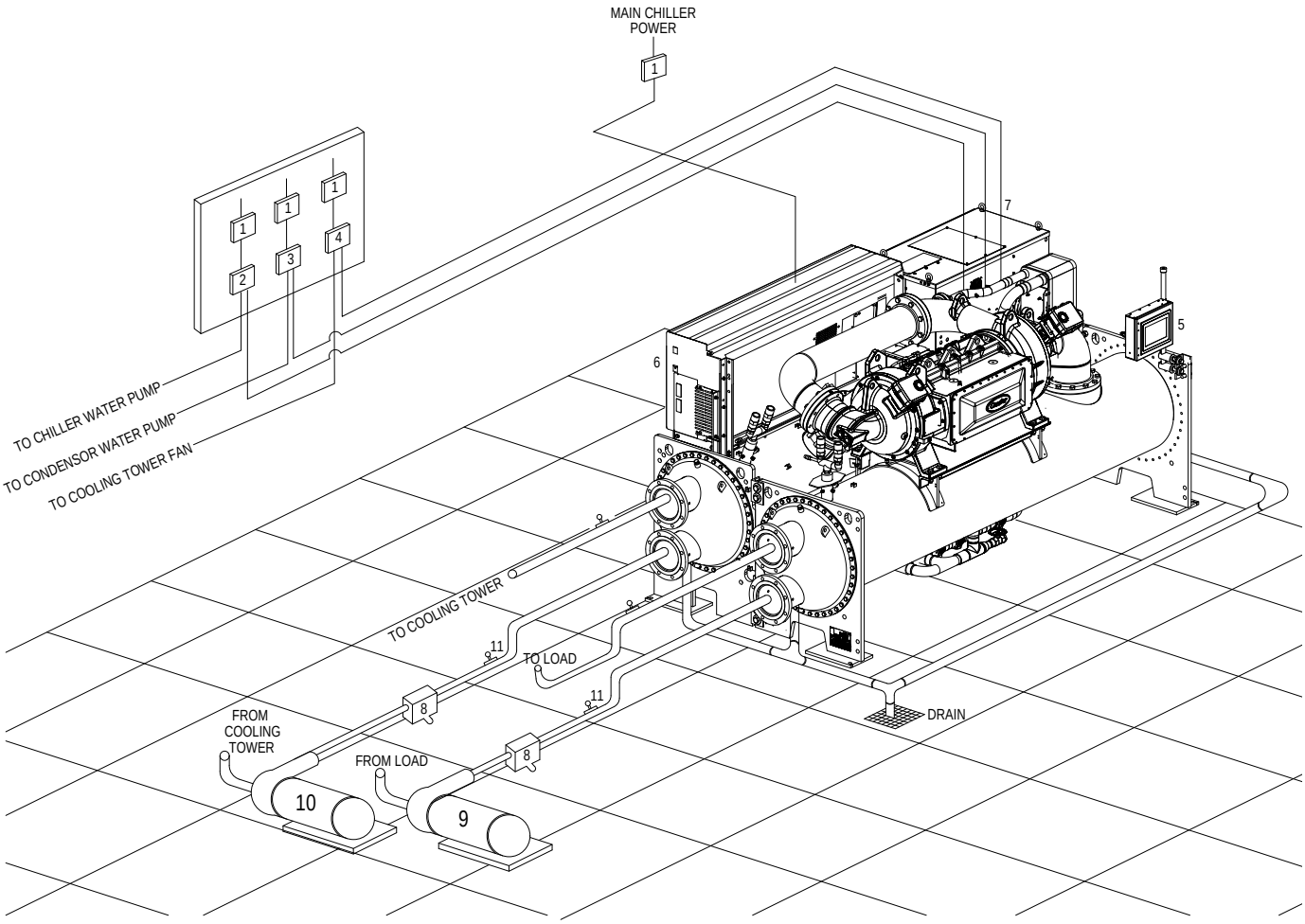

1 — Disconnect
2 — Chilled Water Pump Starter
3 — Condenser Water Pump Starter
4 — Cooling Tower Fan Starter (Low Fan, High Fan)
5 — HMI
6 — Unit-Mounted VFD
7— Power Panel
8 — Strainers
9 — Chilled Water Pump
10 — Condenser Water Pump
11 — Pressure Gages
12 — Local Disconnect (hidden - in power panel)

Piping
Control Wiring
Power Wiring

NOTES:

1. Wiring and piping shown are for general point-of-connection only and are not intended to show details for a specific installation. Certified field wiring and dimensional diagrams are available on request.
2. All wiring must comply with applicable codes.
3. Wiring not shown for optional devices such as:
   - Remote Start/Stop
   - Remote Alarms
   - Optional Safety Device
   - 4 to 20 mA Resets
   - Optional Remote Sensors
4. IMPORTANT: Carrier suggests that a structural engineer be consulted if transmission of vibrations from mechanical equipment is of concern.
5. Isolation valves are recommended on the evaporator and condenser water piping to each chiller for service.
6. Operating environment — Chiller should be installed in an indoor environment where the ambient temperature is 40 to 104°F (4 to 40°C) with a relative humidity (non-condensing) of 95% or less. To ensure that electrical components operate properly, do not locate the chiller in an area exposed to dust, dirt, corrosive fumes, or excessive heat and humidity.
7. Disconnection must be incorporated in the fixed wiring in accordance with the local country-specific requirements or NFPA (National Fire Protection Association).
8. Tophat is shipped loose and field assembled.
9. Strainers are typically located on the suction side of the water pumps. It is acceptable to install strainers on either side of the pump.

19MV2 Chiller with Unit-Mounted VFD Diagram — Standard Tier Option

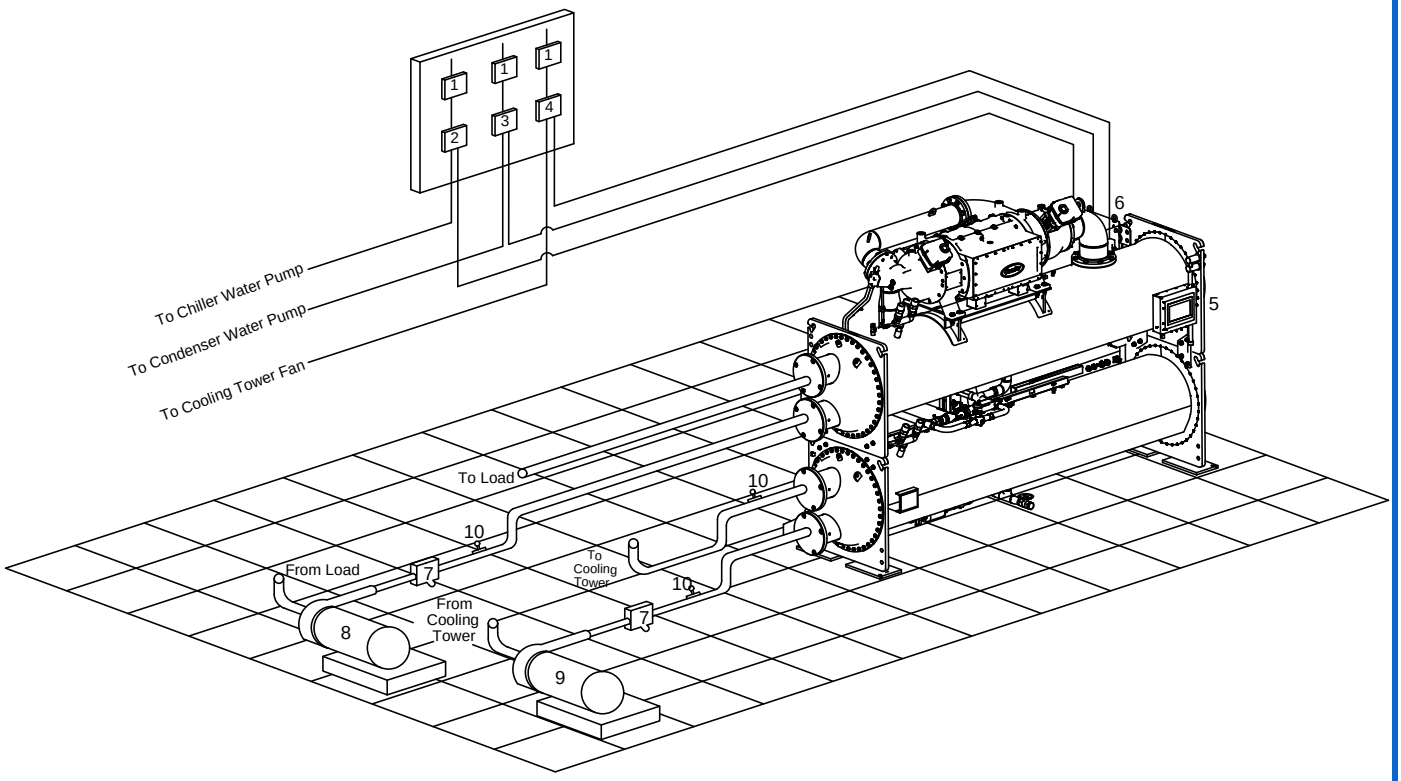

LEGEND
1 — Disconnect
2 — Chilled Water Pump Starter
3 — Condenser Water Pump Starter
4 — Cooling Tower Fan Starter (Low Fan, High Fan)
5 — HMI
6 — Power Panel
7 — Strainers
8 — Chilled Water Pump
9 — Condenser Water Pump
10 — Pressure Gages
11 — Local Disconnect (hidden - in power panel)
Piping
Control Wiring
Power Wiring

NOTES:
1. Wiring and piping shown are for general point-of-connection only and are not intended to show details for a specific installation. Certified field wiring and dimensional diagrams are available on request.
2. All wiring must comply with applicable codes.
3. Wiring not shown for optional devices such as:
   a. Remote Start/Stop
   b. Remote Alarms
   c. Optional Safety Device
   d. 4 to 20 mA Resets
   e. Optional Remote Sensors
4. IMPORTANT: Carrier suggests that a structural engineer be consulted if transmission of vibrations from mechanical equipment is of concern.
5. Isolation valves are recommended on the evaporator and condenser water piping to each chiller for service.
6. Operating environment — Chiller should be installed in an indoor environment where the ambient temperature is 40 to 104°F (4 to 40°C) with a relative humidity (non-condensing) of 95% or less. To ensure that electrical components operate properly, do not locate the chiller in an area exposed to dust, dirt, corrosive fumes, or excessive heat and humidity.
7. Disconnection must be incorporated in the fixed wiring in accordance with the local country- specific requirements or NFPA (National Fire Protection Association).
8. Tophat is shipped loose and field assembled.
9. Strainers are typically located on the suction side of the water pumps. It is acceptable to install strainers on either side of the pump.

19MV3 Chiller with Unit-Mounted VFD Diagram — High Tier Option

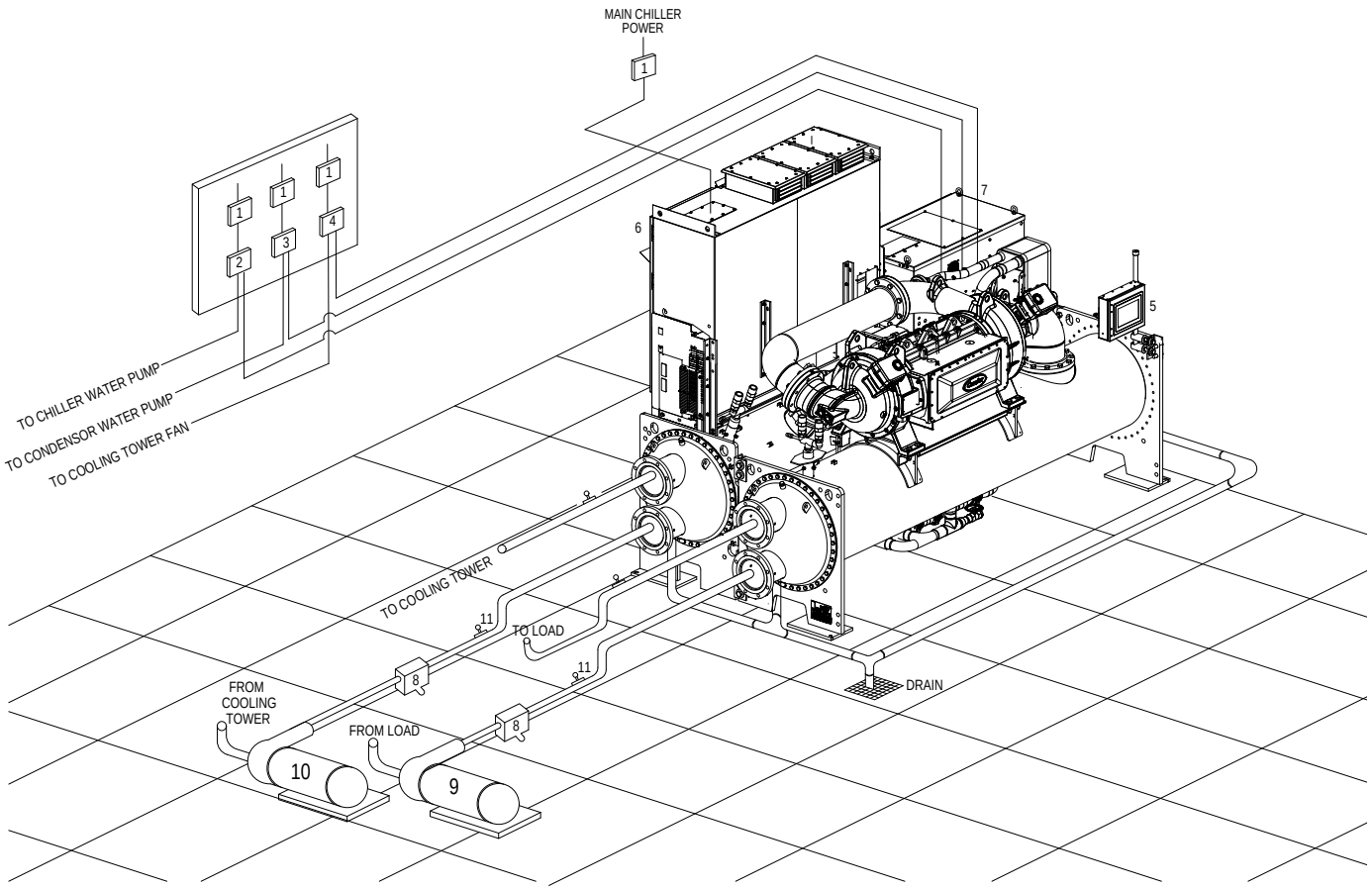

1 — Disconnect
2 — Chilled Water Pump Starter
3 — Condenser Water Pump Starter
4 — Cooling Tower Fan Starter (Low Fan, High Fan)
5 — HMI
6 — Unit-Mounted VFD
7— Power Panel
8 — Strainers
9 — Chilled Water Pump
10 — Condenser Water Pump
11 — Pressure Gages
12 — Local Disconnect (hidden - in power panel)
Piping
Control Wiring
Power Wiring

NOTES:
1. Wiring and piping shown are for general point-of-connection only and are not intended to show details for a specific installation. Certified field wiring and dimensional diagrams are available on request.
2. All wiring must comply with applicable codes.
3. Wiring not shown for optional devices such as:
   - Remote Start/Stop
   - Remote Alarms
   - Optional Safety Device
   - 4 to 20 mA Resets
   - Optional Remote Sensors
4. IMPORTANT: Carrier suggests that a structural engineer be consulted if transmission of vibrations from mechanical equipment is of concern.
5. Isolation valves are recommended on the evaporator and condenser water piping to each chiller for service.
6. Operating environment — Chiller should be installed in an indoor environment where the ambient temperature is 40 to 104°F (4 to 40°C) with a relative humidity (non-condensing) of 95% or less. To ensure that electrical components operate properly, do not locate the chiller in an area exposed to dust, dirt, corrosive fumes, or excessive heat and humidity.
7. Disconnection must be incorporated in the fixed wiring in accordance with the local country-specific requirements or NFPA (National Fire Protection Association).
8. Tophat is shipped loose and field assembled.
9. Strainers are typically located on the suction side of the water pumps. It is acceptable to install strainers on either side of the pump.

19MV Two-Stage Compressor Machine Footprint

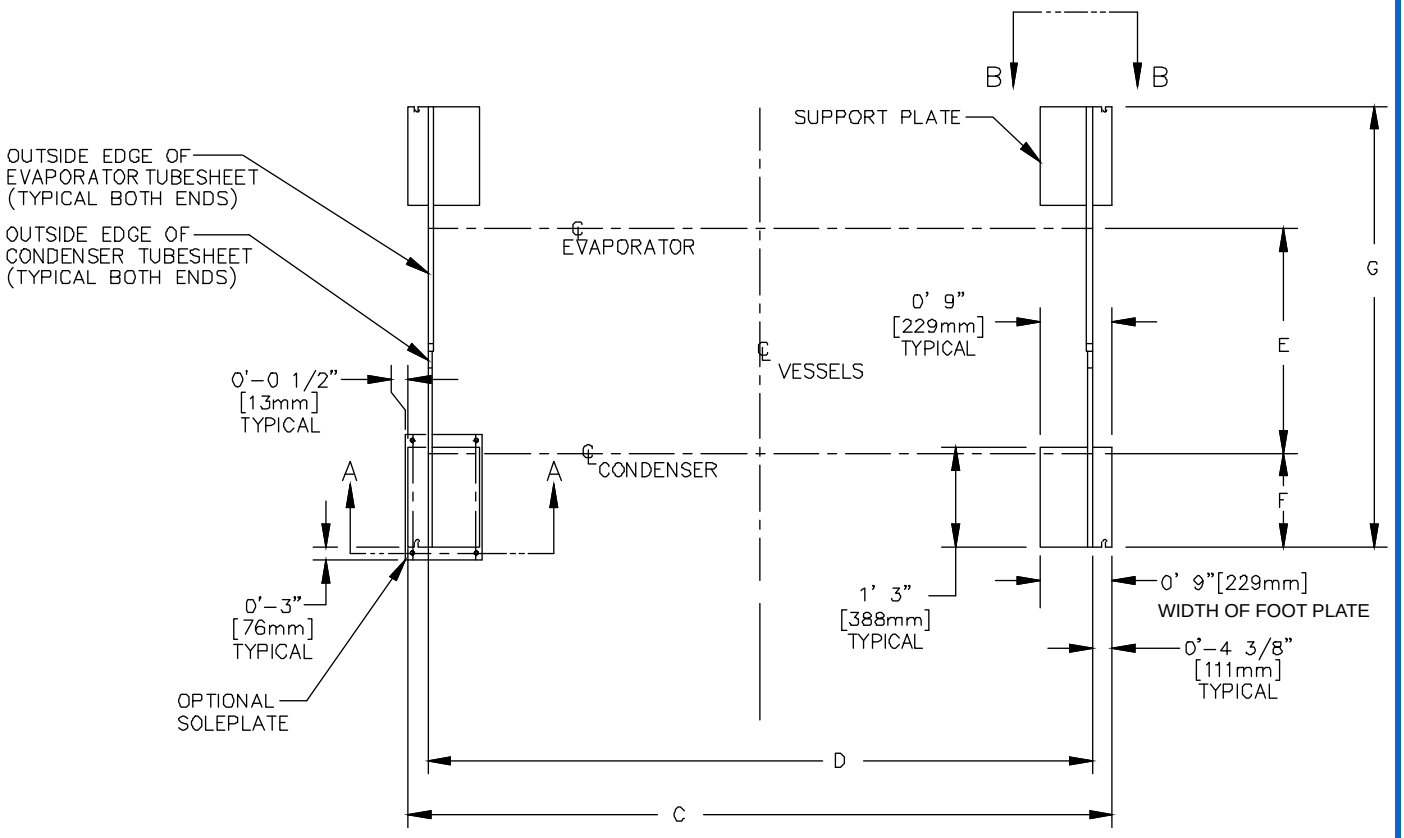

19MV HEAT EXCHANGER SIZE

FRAME	DIMENSION C		DIMENSION D		DIMENSION E		DIMENSION F		DIMENSION G	
	ft-in.	mm	ft-in.	mm	ft-in.	mm	ft-in.	mm	ft-in.	mm
1	11' - 9-1/4"	3588	11' - 2"	3404	0	0	1' - 6-3/4"	475	3' - 1-3/8"	950
	13' - 9-1/4"	4198	13' - 2"	4013	0	0	1' - 6-3/4"	475	3' - 1-3/8"	950
2	11' - 9-1/4"	3588	11' - 2"	3404	0	0	1' - 6-3/4"	475	3' - 1-3/8"	950
	13' - 9-1/4"	4198	13' - 2"	4013	0	0	1' - 6-3/4"	475	3' - 1-3/8"	950
3	11' - 9-1/4"	3588	11' - 2"	3404	2' - 11"	889	1' - 5-1/8"	435	5' - 10"	1778
	13' - 9-1/4"	4198	13' - 2"	4013	2' - 11"	889	1' - 5-1/8"	435	5' - 10"	1778
4	11' - 9-1/4"	3588	11' - 2"	3404	2' - 11"	889	1' - 4-3/4"	425	5' - 10"	1778
	13' - 9-1/4"	4198	13' - 2"	4013	2' - 11"	889	1' - 4-3/4"	425	5' - 10"	1778
5	11' - 9-1/4"	3588	11' - 2"	3404	3' - 3-1/4"	997	1' - 8"	997	7' - 6-1/2"	1994
	13' - 9-1/4"	4198	13' - 2"	4013	3' - 3-1/4"	997	1' - 8"	997	7' - 6-1/2"	1994

NOTE(S):
1. View A-A refers to accessory soleplate.
2. View B-B refers to standard support plate.
3. C dimension is measured from actual edge of footplate.
4. D dimension is measured from outside edge to outside edge of tubesheets.
5. E dimension is measured from center line to center line.
6. F dimension is measured from edge of tubesheets (extends past footplate). See certified drawings for actual maximum width.
7. G dimensions are from outermost edge of tubesheets (tubesheet extends slightly past footplate).

19MV Isolation with Accessory Soleplate Package

TYPICAL ISOLATION

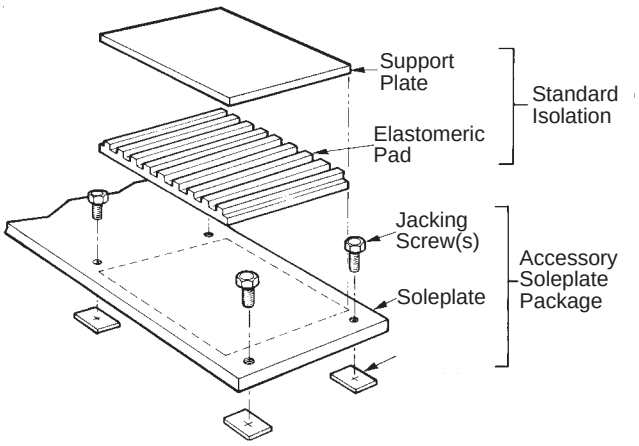

STANDARD ISOLATION

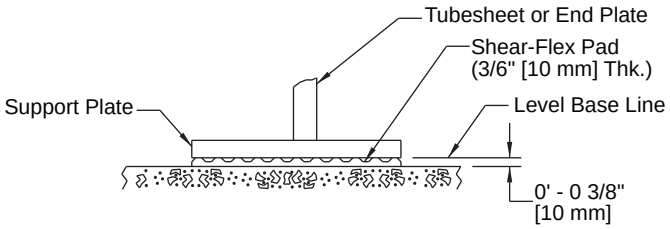

VIEW B-B

ISOLATION WITH STANDARD PACKAGE ONLY

NOTE: Isolation package includes 4 Shear-Flex isolation pads.

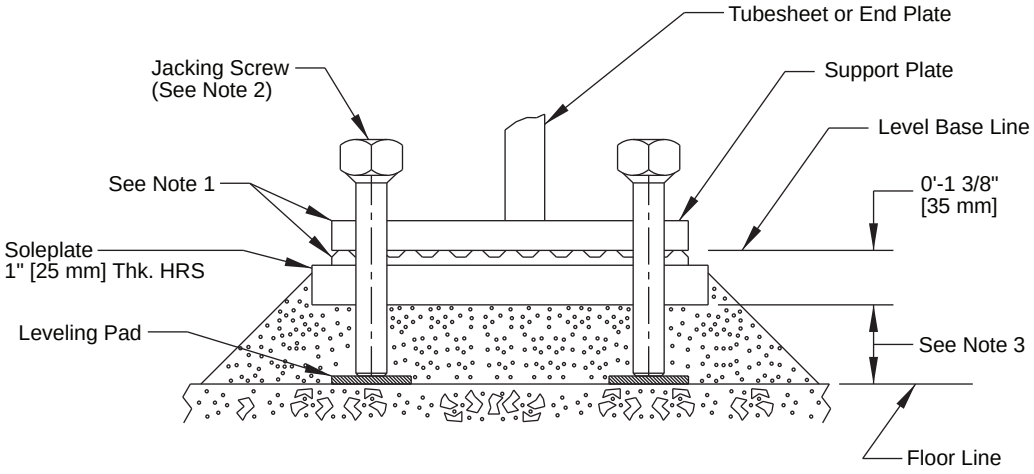

VIEW A-A

NOTES:

1. Optional soleplate package includes 4 soleplates, 16 jacking screws, and 16 leveling pads. Isolation package is also required.
2. Jacking screws to be removed after grout has set.
3. Thickness of grout will vary, depending on the amount necessary to level chiller. Use Ceilcote®[1] 748 OR MasterFlow™[1] 885, 1-1/2 in. (38.1 mm) to 2-1/4 in. (57 mm) thick. Both grouts have minimum shrinkage. MasterFLow is premixed.
4. For R-1234ze(E) guidelines please refer to service and installation manuals.

1. Third-party trademarks and logos are property of their respective owners.

19MV3 Nozzle Arrangements Nozzle-in-Head Waterboxes

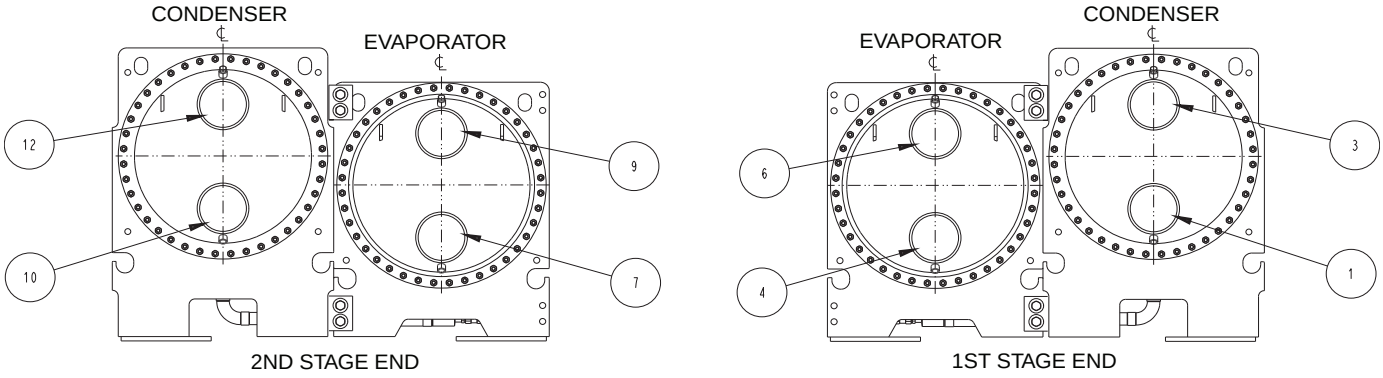

NOZZLE ARRANGEMENT CODES FOR NOZZLE-IN-HEAD WATERBOXES

EVAPORATOR WATERBOXES[a]			
PASS	In	Out	Arrangement Code[b]
2	7	9	C
	4	6	D

CONDENSER WATERBOXES[a]			
PASS	In	Out	Arrangement Code[b]
2	10	12	R
	1	3	S

NOTE(S):

a. Vents and drains are 3/4 in., FPT, located on waterbox head.
b. Refer to certified drawings.

19MV2 Nozzle Arrangements Nozzle-in-Head Waterboxes

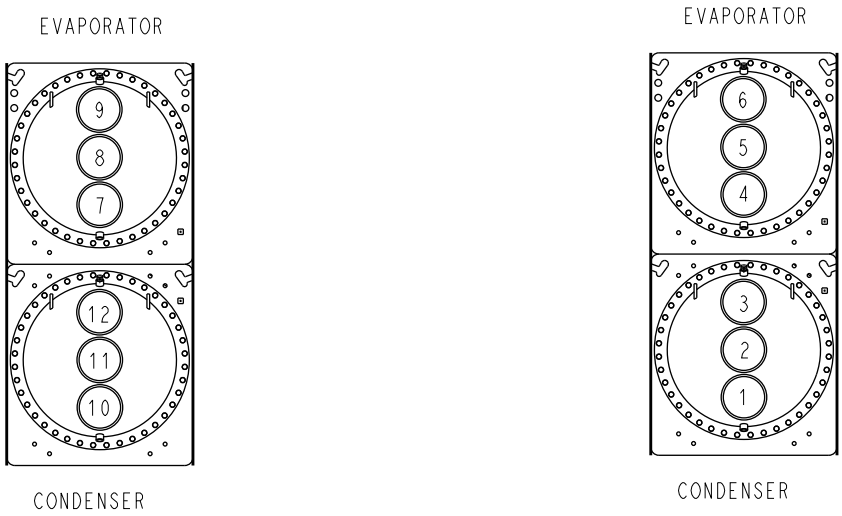

NOZZLE ARRANGEMENT CODES FOR NOZZLE-IN-HEAD WATERBOXES

EVAPORATOR WATERBOXES			
PASS	In	Out	Arrangement Code
1	8	5	A
	5	8	B
2	7	9	C
	4	6	D
3	7	6	E
	4	9	F

CONDENSER WATERBOXES			
PASS	In	Out	Arrangement Code
1	11	2	P
	2	11	Q
2	10	12	R
	1	3	S

19MV3 Nozzle Arrangements Marine Waterboxes

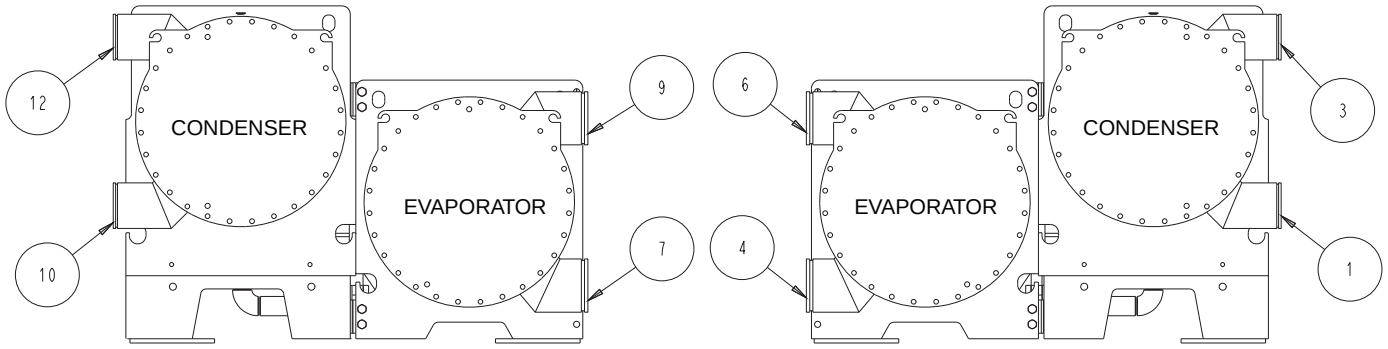

2ND STAGE END 1ST STAGE END

NOZZLE ARRANGEMENT CODES FOR MARINE WATERBOXES

EVAPORATOR WATERBOXES[a]			
PASS	In	Out	Arrangement Code[b]
2	7	9	C
	4	6	D

CONDENSER WATERBOXES[a]			
PASS	In	Out	Arrangement Code[b]
2	10	12	R
	1	3	S

NOTE(S):

a. Vents and drains are 3/4 in., FPT, located on waterbox head.
b. Refer to certified drawings.

19MV2 Nozzle Arrangements Marine Waterboxes

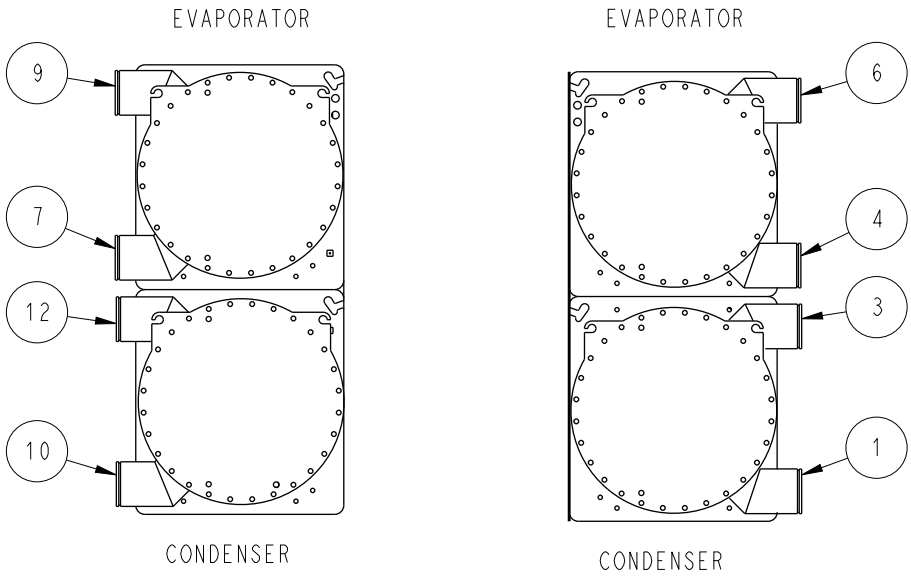

2nd Stage End 1st Stage End

NOZZLE ARRANGEMENT CODES FOR MARINE WATERBOXES

EVAPORATOR WATERBOXES[a]			
PASS	In	Out	Arrangement Code[b]
1	9	6	A
	6	9	B
2	7	9	C
	4	6	D
3	7	6	E
	4	9	F

CONDENSER WATERBOXES[a]			
PASS	In	Out	Arrangement Code[b]
1	12	3	P
	3	12	Q
2	10	12	R
	1	3	S

NOTE(S):

a. Vents and drains are 3/4 in., FPT, located on waterbox head.
b. Refer to certified drawings.

Application data (cont)

Relief Valve Locations[a]

LOCATION	FRAME SIZE	PRESSURE RELIEF DEVICE OUTLET SIZE
EVAPORATOR	2, 3, 4, 5	2 x 1-1/4 in. NPT Female Connector (installed with transfer valve)
CONDENSER		2 x 1-1/4 in. NPT Female Connector (installed with transfer valve)

NOTE(S):

a. All valves relieve at 185 psig (1275 kPa).

Relief Device Arrangements

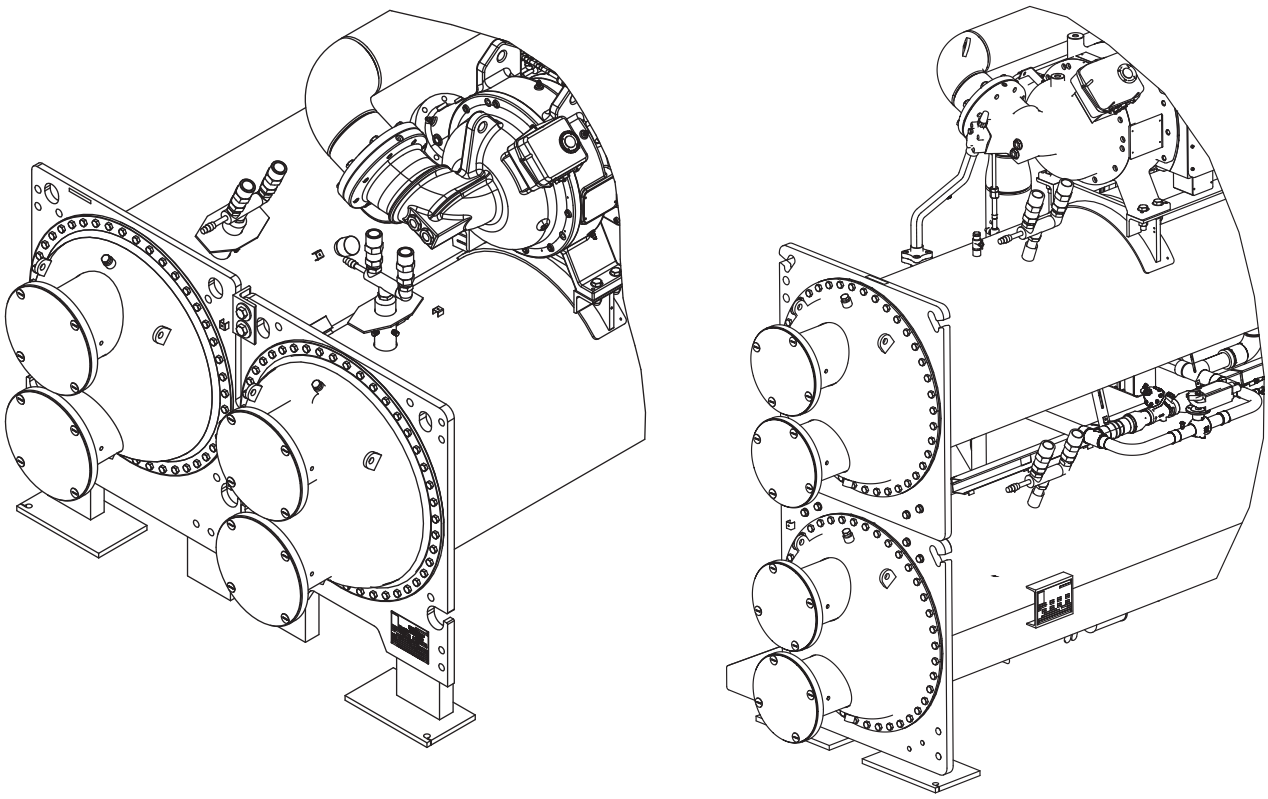

Application data (cont)

Vent and drain connections

Nozzle-in-head waterboxes have vent and drain connections on covers. Marine waterboxes have vent and drain connections on waterbox shells.

Provide high points of the chiller piping system with vents and the low points with drains. If shutoff valves are provided in the main water pipes near the unit, a minimal amount of system water is lost when the heat exchangers are drained. This reduces the time required for drainage and saves on the cost of re-treating the system water.

It is recommended that pressure gauges be provided at points of entering and leaving water to measure pressure drop through the heat exchanger. Gauges may be installed as shown in Pressure Gauge Location table. Pressure gauges installed at the vent and drain connections do not include nozzle pressure losses.

Use a reliable differential pressure gauge to measure pressure differential when determining water flow. Regular gauges of the required pressure range do not have the accuracy to provide accurate measurement of flow conditions.

Pressure Gauge Location

NUMBER OF PASSES	GAUGE LOCATION (EVAPORATOR OR CONDENSER)
2	Two gauges in waterbox with nozzles

ASME stamping

All 19MV heat exchangers are constructed in accordance with ASHRAE (American Society of Heating, Refrigerating, and Air-Conditioning Engineers) 15 Safety Code for Mechanical Refrigeration (latest edition). This code, in turn, requires conformance with ASME (American Society of Mechanical Engineers) Code for Unfired Pressure Vessels wherever applicable.

Each vessel is constructed and certified in accordance with ASME Section 8, Division 1.

Relief valve discharge pipe sizing

See page 27 for number of relief valves and locations.

Relief valve discharge piping size should be calculated per ASHRAE 15, latest edition, using the tabulated C factors for each vessel shown in the Rupture Disc Discharge Pipe Sizing table.

Carrier further recommends that an oxygen sensor be installed to protect personnel. Sensor should be able to sense the depletion or displacement of oxygen in the machine room below 19.5% volume oxygen per ASHRAE 15, latest edition.

Relief Valve Discharge Pipe Sizing

HEAT EXCHANGER	FRAME SIZE	REQUIRED C FACTOR R-134a [LBM AIR / MIN]	REQUIRED C FACTOR R-513A R-515B R1234ZE(E) [LBM AIR / MIN]	RATED C FACTOR [LBM AIR / MIN]	FIELD CONNECTION SIZE in. [FPT]
EVAPORATOR	21E to 21N	39.6	36.1	70.8	1-1/4
	23E to 23N	46.7	42.6	70.8	1-1/4
	31B to 31N	39.5	36.0	70.8	1-1/4
	33B to 33N	46.5	42.4	70.8	1-1/4
	41B to 41N	45.8	41.8	70.8	1-1/4
	43B to 43N	54.0	49.3	70.8	1-1/4
	51B to 51N	48.8	44.5	70.8	1-1/4
	53B to 53N	57.5	52.5	70.8	1-1/4
	31O to 31Z	39.5	36.0	70.8	1-1/4
	33O to 33Z	46.5	42.4	70.8	1-1/4
	41O to 41Z	45.8	41.8	70.8	1-1/4
	43O to 43Z	54.0	49.3	70.8	1-1/4
	51O to 51Z	48.8	44.5	70.8	1-1/4
	53O to 53Z	57.5	52.5	70.8	1-1/4
CONDENSER	21K to 21P	37.8	34.5	70.8	1-1/4
	23K to 23P	44.6	40.7	70.8	1-1/4
	31B to 31N	37.6	34.3	70.8	1-1/4
	33B to 33N	44.3	40.4	70.8	1-1/4
	41B to 41N	42.8	39.1	70.8	1-1/4
	43B to 43N	50.5	46.1	70.8	1-1/4
	51B to 51N	46.5	42.4	70.8	1-1/4
	53B to 53N	54.9	50.1	70.8	1-1/4

Design pressures

Design and test pressures for heat exchangers are listed below.

Design and Test Pressures for Heat Exchangers

VESSEL PRESSURES		SHELL SIDE (REFRIGERANT)		STANDARD TUBE SIDE (WATER)		OPTIONAL TUBE SIDE (WATER)	
		psig	kPa	psig	kPa	psig	kPa
EVAPORATOR	Design	185	1276	150	1034	300	2068
	Leak Test (min)	185	1276	150	1034	300	2068
	Hydrostatic Test	—	—	195	1344	390	2690
	Proof Test (min Pneumatic)	204	1407	—	—	—	—
CONDENSER	Design	185	1276	150	1034	300	2068
	Leak Test (min)	185	1276	150	1034	300	2068
	Hydrostatic Test	—	—	195	1344	390	2690
	Proof Test (min Pneumatic)	204	1407	—	—	—	—
ECONOMIZER	Design	185	1276	—	—	—	—
	Leak Test (min)	185	1276	—	—	—	—
	Hydrostatic Test	—	—	—	—	—	—
	Proof Test (min Pneumatic)	204	1407	—	—	—	—

Heat Exchanger Material Specifications

ITEM	MATERIAL	SPECIFICATION
SHELL	HR Steel	ASME SA516 GR .70
TUBE SHEET	HR Steel	ASME SA516 GR .70
FLAT COVERS	HR Steel	ASME/ASTM A516 GR.70
PIPE	Steel	ASME SA106 GRB/SA53 E/B
FLANGES	Steel	ASME B16.5
TUBES	Per Job Requirement	ASME SB359
DISHED COVER	HR Steel	ASTM A516 GR.70/GB713 Q345R
MARINE WATER BOX SHELL	HR Steel	ASME/ASTM A516 GR.70

Insulation

Factory insulation (optional)

The factory insulation option for the 19MV chillers include the following areas: evaporator (not including waterbox); suction line up to the compressor suction housing; compressor motor and motor cooling return lines; motor MBC cover; the liquid line, economizer, and economizer piping.

Insulation applied at the factory is 3/4 in. (19 mm) thick and has a thermal conductivity K value of 0.28 (Btu in.)/hr ft^2 °F [(0.0404 • W)/(m • °C)]. Insulation conforms with Underwriters Laboratories (UL) Standard 94, Classification 94HBF.

Insulation at jobsite

As indicated in the Condensation vs. Relative Humidity table, the factory insulation provides excellent protection against condensation under most operating conditions. If temperatures in the equipment area exceed the maximum design conditions, extra insulation is recommended. If the machine is to be field insulated, obtain the approximate areas from the Minimum Field-Installed Insulation Requirements table.

Insulation of waterbox is made only in the field and this area is not included in Minimum Field-Installed Insulation Requirements table. When insulating the covers, allow for service access and removal of covers. To estimate waterbox cover areas refer to certified drawings.

High humidity jobsite locations may require field supplied and installed insulation on the suction housing and lower half of the condenser.

Minimum Field-Installed Insulation Requirements[a,b]

FRAME SIZE	LENGTH (in.)	INSULATION AREA (sq ft)
Frame 2	134	125
	158	135
Frame 3	134	125
	158	135
Frame 4	134	155
	158	170
Frame 5	134	170
	158	185

NOTE(S):

a. Factory installed as shown on page 30.
b. Insulation amount includes only the amount of insulation required to insulate the sections of the chiller that would be included in the factory-installed insulation option.

Condensation vs. Relative Humidity[a]

AMOUNT OF CONDENSATION	ROOM DRY-BULB TEMP		
	80°F (27°C)	90°F (32°C)	100°F (38°C)
	% RELATIVE HUMIDITY		
NONE	80	76	70
SLIGHT	87	84	77
EXTENSIVE	94	91	84

NOTE(S):

a. These approximate figures are based on 35°F (1.7°C) saturated suction temperature. A 2°F (1.1°C) change in saturated suction temperature changes the relative humidity values by 1% in the same direction.

Unit location

The chiller should be installed in an indoor environment where the ambient temperature is 40 to 104°F (4 to 40°C) with a relative humidity (non-condensing) of 95% or less. To ensure that electrical components operate properly, do not locate the chiller in an area exposed to dust, dirt, corrosive fumes, or excessive heat and humidity.

19MV3 Standard Insulation Area

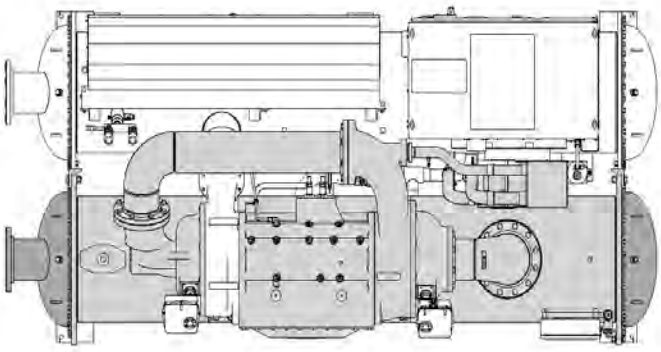

Top View

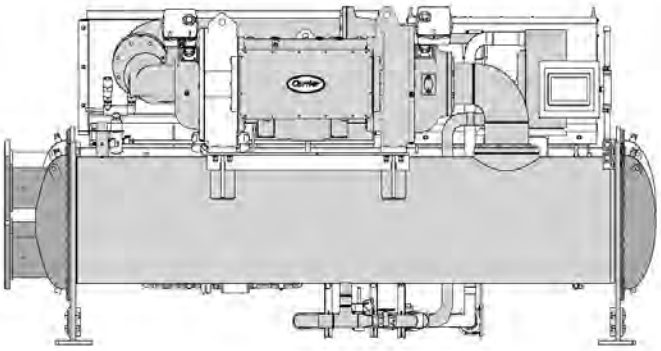

2nd Stage End

Front View

1st Stage End

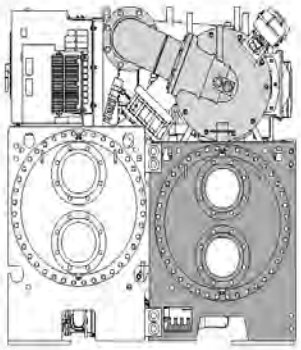

2nd Stage End

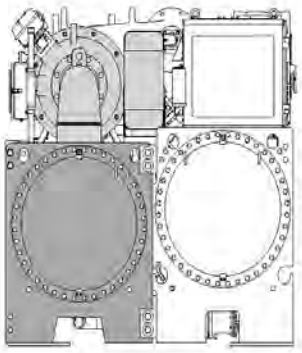

1st Stage End

NOTE: Economized configuration optional, and shown here as reference.

19MV2 Standard Insulation Area

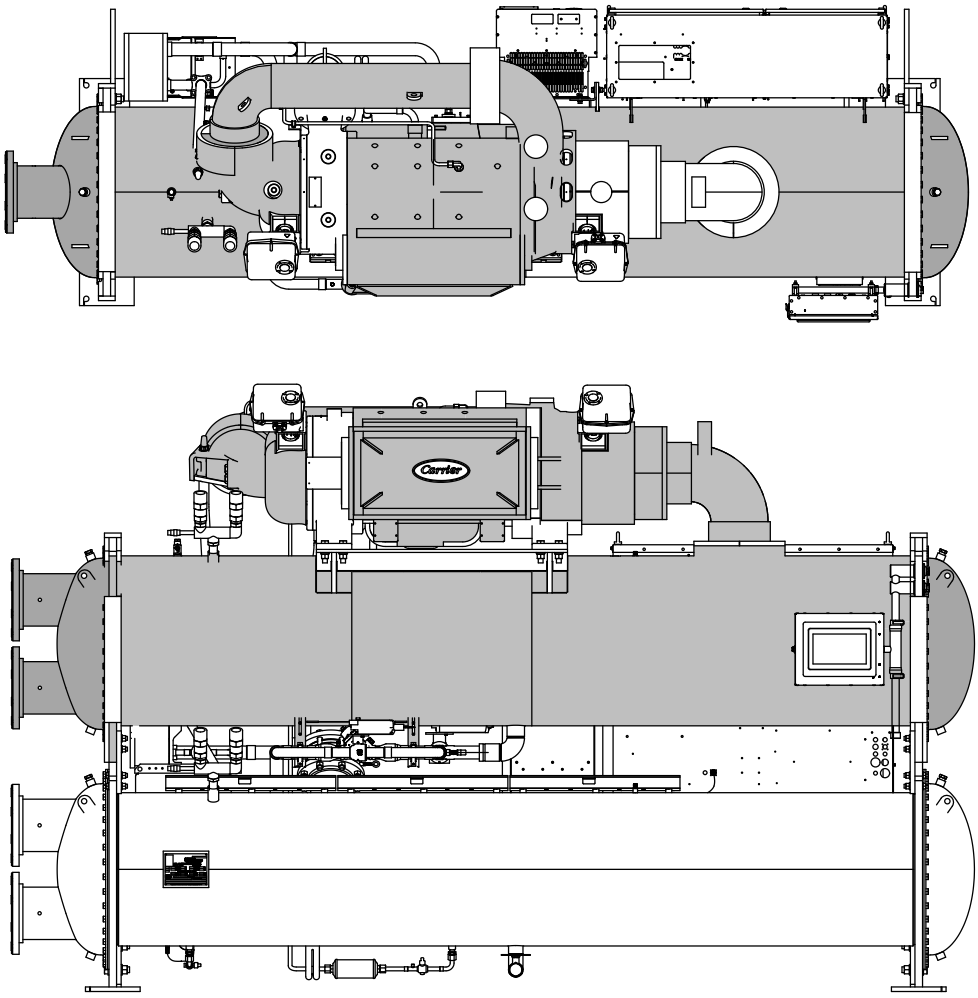

NOTE: Economized configuration optional, and shown here as reference.

Note about this specification:
This specification is in the "Masterformat" as published by the Construction Specification Institute. Please feel free to copy this specification directly into your building spec.

Packaged Semi-Hermetic Centrifugal Liquid Chiller

HVAC Guide Specifications — 19MV

Size Range: **19MV to 150 to 700 Nominal Tons (527 to 2,461 kW)**

Carrier Model Number: **19MV**

Part 1 — General

1.01 SYSTEM DESCRIPTION

A. Microprocessor-controlled liquid chiller shall use a semi-hermetic centrifugal compressor using Ultra low GWP PURE*tec*™ R-1234*ze*(E) or Low GWP R-513A or R-515B refrigerant.

B. If a manufacturer proposes a liquid chiller using R-123 or R-514A refrigerant, then the manufacturer shall include in the chiller price:

1. A vapor activated alarm system capable of responding to R-123 or R-514A levels of 10 ppm Allowable Exposure Limit (AEL).
2. External refrigerant storage tank and pumpout unit.
3. Zero emission purge unit capable of operating even when the chiller is not operating.
4. Back-up relief valve to rupture disk.
5. Chiller pressurizing system to prevent leakage of noncondensables into chiller during shutdown periods.
6. Plant room ventilation.

1.02 QUALITY ASSURANCE

A. Chiller performance shall be rated in accordance with AHRI (Air-Conditioning, Heating and Refrigeration Institute) Standard 550/590, latest edition. The chiller manufacturer, model number and refrigerant shall be listed on the AHRI.org website (www.ahridirectory.org).

B. Equipment and installation shall be in compliance with ANSI/ASHRAE (American National Standards Institute/American Society of Heating, Refrigerating and Air-Conditioning Engineers) 15 (latest edition).

C. Evaporator and condenser refrigerant side shall include ASME "U" stamp and nameplate certifying compliance with ASME Section VIII, Division 1 code for unfired pressure vessels.

D. Chiller shall be designed and constructed to meet UL (Underwriters Laboratories) and UL, Canada requirements and have labels appropriately affixed.

E. Centrifugal compressor impellers shall be dynamically balanced and over-speed tested by the manufacturer at a minimum of 120% design operating speed. Each compressor assembly shall undergo a mechanical run-in test to verify vibration levels are within acceptable limits.

F. Each compressor assembly shall be proof tested at a minimum 204 psig (1406 kPa) and leak tested at 185 psig (1276 kPa) with a tracer gas mixture.

G. Entire chiller assembly shall be proof tested at 204 psig (1406 kPa) and leak tested at 185 psig (1276 kPa) with a tracer gas mixture on the refrigerant side. The water side of each heat exchanger shall be hydrostatically tested at 1.3 times rated working pressure.

H. Prior to shipment, the chiller automated controls test shall be executed to check for proper wiring and ensure correct controls operation.

I. The unit-mounted VFD (variable frequency drive) shall be factory wired and tested to verify proper operation prior to shipment.

J. The management system governing the manufacture of this chiller shall be ISO 9001:2015 certified.

1.03 DELIVERY, STORAGE AND HANDLING

A. Unit shall be stored and handled in accordance with manufacturer's instructions.

B. Unit shall be shipped with all refrigerant piping and control wiring factory installed.

C. Unit shall be shipped charged with full charge of refrigerant R-515B or R-513A or a nitrogen holding charge as specified on the equipment schedule. R-1234*ze*(E) is field charge only.

D. Unit shall be shipped with firmly attached labels that indicate name of manufacturer, chiller model number, chiller serial number, and refrigerant used.

E. If the chiller is to be exported, the unit shall be sufficiently protected from the factory against sea water corrosion to be suitable for shipment in a standard open top, ocean shipping container (19MV heat exchanger frame sizes 3 and 4 only, standard tier VFD).

1.04 WARRANTY

Warranty shall include parts and labor for one year after start-up or 18 months from shipment, whichever occurs first.

Part 2 — Products

2.01 EQUIPMENT

A. General:
Factory assembled, single piece, liquid chiller shall consist of compressor, motor, variable frequency drive, lubrication system, evaporator, condenser, initial oil and refrigerant operating charges, microprocessor control system, and documentation required prior to start-up.

B. Compressor:

1. One high performance centrifugal compressor.
2. Compressor, motor, and transmission shall be semi-hermetically sealed into a common assembly and arranged for easy field servicing.
3. Connections to the compressor casing shall use gaskets to reduce the occurrence of refrigerant

leakage. Connections to the compressor shall be flanged or bolted for easy disassembly.

4. All pressure transducers shall have quick disconnects to allow replacement of the sensor without replacement of the entire sensor wire. Pressure transducers shall be capable of field calibration to ensure accurate readings and to avoid unnecessary transducer replacement. Pressure transducers and temperature sensors shall be serviceable without the need for refrigerant charge removal or isolation. The high pressure switch requires pulling of the refrigerant charge before changing.
5. The 19MV– unit has magnetic bearings and backup angular contact roller element bearings. The 19MVR unit has angular contact ball bearings which control the radial and axial movement of the shaft.
6. Centrifugal compressors shall use variable inlet guide vanes to provide capacity modulation while also providing pre-whirl of the refrigerant vapor entering the impeller for more efficient compression at all loads.
7. In the 19MVR unit, centrifugal compressors shall be provided with a factory-installed lubrication system to deliver oil under pressure to bearings and transmission. Included in the system shall be:
   a. Hermetic driven oil pump with factory-installed motor contactor with overload protection.
   b. Oil pressure regulator (19MVR rolling element bearing units).
   c. Oil filter with isolation valves to allow filter change without removal of refrigerant charge (19MVR rolling element bearing units).
   d. Oil sump heater controlled from unit microprocessor (19MVR rolling element bearing units).
   e. Oil reservoir temperature sensor with main control center digital readout (19MVR rolling element bearing units).
   f. When factory-mounted compressor motor starter or VFD is provided, all wiring to oil pump, oil heater, and controls shall be prewired in the factory.
   g. Compressor shall be fully field serviceable. Compressors which must be removed and returned to the factory for service shall be unacceptable.

C. Motor:

1. Compressor motor shall be of the semi-hermetic, liquid refrigerant cooled, permanent magnet type suitable for voltage shown on the equipment schedule.
   a. On 19MVR rolling element bearing units, an oil reservoir shall collect oil and refrigerant that leaks past the seal.
   b. A float device shall be provided to open when the reservoir is full, directing the refrigerant/oil mixture back into the compressor housing.
   c. A refrigerant sensor shall be located next to the open drive seal to detect leaks.
2. Motors shall be suitable for operation in a refrigerant atmosphere and shall be cooled by atomized refrigerant in contact with the motor windings.
3. Motor stator shall be arranged for service or removal with only minor compressor disassembly and without removing main refrigerant piping connections.
4. Full load operation of the motor shall not exceed nameplate rating.
5. At least one motor winding temperature sensor (and one spare) shall be provided.
6. Should the mechanical contractor choose to provide a chiller with an open motor instead of the specified semi-hermetic motor, the contractor shall install additional cooling equipment to dissipate the motor heat as per the following formula:

   Btuh = (FLkW motor) (0.05) (3413)

   Btuh = (FLkW motor) (171)

   and, alternately,

   Tons = Btuh / 12,000

   The additional piping, valves, air-handling equipment, insulation, wiring, switchgear changes, ductwork, and coordination with other trades shall be the responsibility of the mechanical contractor. Shop drawings reflecting any changes to the design shall be included in the submittal, and incorporated into the final as built drawings for the project.
7. Also, if an open motor is provided, a mechanical room thermostat shall be provided and set at 104°F (40°C). If this temperature is exceeded, the chillers shall shut down and an alarm signal shall be generated to the Central Energy Management System (EMS) display module prompting the service personnel to diagnose and repair the cause of the overtemperature condition. The mechanical contractor shall be responsible for all changes to the design, including coordination with temperature control, electrical and other trades. In addition, the electrical power consumption of any auxiliary ventilation and/or mechanical cooling required to maintain mechanical room conditions stated above shall be considered in the determination of conformance to the scheduled chiller energy efficiency requirement.

D. Evaporator and Condenser:

1. Evaporator shall be of shell and tube type construction, each in separate shells. Units shall be fabricated with high-performance tubing, minimum 1/4 in. (6 mm) steel shell and tube sheets with fabricated steel waterboxes.

a. Waterbox shall be nozzle-in-head waterbox (150 psig [1034 kPa]).

b. Waterbox shall have standard Victaulic grooves. Victaulic AGS grooves shall be provided for nominal 14 in. pipe and larger.

2. Condenser shall be of shell and tube type construction, each in separate shells. Units shall be fabricated with high-performance tubing, minimum 1/4 in. (6 mm) steel shell and tube sheets with fabricated steel waterboxes.

a. Waterbox shall be nozzle-in-head (150 psig [1034 kPa]).

b. Waterbox shall have standard Victaulic grooves. Victaulic AGS grooves shall be provided for nominal 14 in. pipe and larger.

3. Waterboxes shall have vents, drains, and covers to permit tube cleaning within the space shown on the drawings. A thermistor-type temperature sensor with quick connects shall be factory installed in each water nozzle.

4. Tubes shall be individually replaceable from either end of the heat exchanger without affecting the strength and durability of the tube sheet and without causing leakage in adjacent tubes.

5. Tubing shall be copper, high-efficiency type, with integral internal and external enhancement unless otherwise noted. Tubes shall be nominal 3/4 in. or 1 in. OD with nominal wall thickness of 0.025 in. measured at the root of the fin at the enhanced areas and nominal wall thickness of 0.049 in. where the tubes are in contact with the end tube sheets unless otherwise noted. Tubes shall be rolled into tube sheets and shall be individually replaceable. Tube sheet holes shall be double grooved for joint structural integrity.

6. Evaporator shall be designed to prevent liquid refrigerant from entering the compressor.

7. The condenser shell shall cool the condensed liquid refrigerant to a reduced temperature, thereby increasing the refrigeration cycle efficiency.

8. A reseating-type pressure relief valve shall be installed on each heat exchanger. If a non-reseating type is used, a backup reseating type shall be installed in series.

E. Refrigerant Flow Control:

1. 19MV3 Only —To maintain optimal part load efficiency at high or low lift, the chiller shall utilize (2) Electronic Expansion Valves (EXVs) in the liquid line between the condenser and the evaporator. When equipped, the economizer shall use a variable metering valve. To ensure good operating performance, the valve design will prevent refrigerant gas from the condenser from passing to the evaporator or economizer at full or part load.

2. By maintaining a liquid seal at the flow valve, bypassed hot gas from the condenser to the evaporator is eliminated. The float valve chamber shall have a bolted access cover to allow field inspection and the float valve shall be field serviceable.

F. Controls, Safeties, and Diagnostics:

1. Controls:

a. The chiller shall be provided with a factory-installed and wired microprocessor control center. The microprocessor can be configured for either English or SI units.

b. All chiller and starter monitoring shall be displayed at the chiller control panel.

c. The controls shall make use of non-volatile memory.

d. The chiller control system shall have the ability to interface and communicate directly to the building control system.

e. The default standard display screen shall simultaneously indicate the following minimum information:

1) Date and time of day
2) 24-character primary system status message
3) 24-character secondary status message
4) Chiller operating hours
5) Entering chilled water temperature
6) Leaving chilled water temperature
7) Evaporator refrigerant temperature
8) Entering condenser water temperature
9) Leaving condenser water temperature
10) Condenser refrigerant temperature
11) Percent motor rated load amps (RLA).

f. In addition to the default screen, status screens shall be accessible to view the status of every point monitored by the control center including:

1) Evaporator pressure
2) Condenser pressure
3) Oil supply pressure (19MVR rolling element bearing units)
4) Oil sump temperature (19MVR rolling element bearing units)
5) Bearing oil supply temperature (19MVR rolling element bearing units)
6) Compressor discharge temperature
7) Motor winding temperature
8) Number of compressor starts
9) Control point settings
10) Discrete output status of various devices
11) Compressor motor starter status
12) Optional spare input channels

13) Current and voltage for each phase

14) Frequency.

g. Schedule Function:

The chiller controls shall be configurable for manual or automatic start-up and shutdown. In automatic operation mode, the controls shall be capable of automatically starting and stopping the chiller according to a stored user programmable occupancy schedule. The controls shall include built-in provisions for accepting:

1) A minimum of two 365-day occupancy schedules.
2) A minimum of 8 separate occupied/unoccupied periods per day.
3) Daylight savings start/end.
4) A minimum of 18 user-defined holidays.
5) A means of configuring an occupancy timed override.
6) Chiller start-up and shutdown via remote contact closure.

h. Service Function:

The controls shall provide a password-protected service function which allows authorized individuals to view an alarm history file which shall contain the last 25 alarm/alert messages with time and date stamp. These messages shall be displayed in text form, not codes.

i. Network Window Function:

Each chiller control panel shall be capable of viewing multiple point values and statuses from other like controllers connected on a common network, including controller maintenance data. The operator shall be able to alter the remote controller's set points or time schedule and to force point values or statuses for those points that are operator forcible. The control panel shall also have access to the alarm history file of all like controllers connected on the network.

j. Pump Control:

Upon request to start the compressor, the control system shall start the chilled water pump and condenser water pumps, and verify that flows have been established.

k. Ramp Loading:

A user-configurable ramp loading rate, effective during the chilled water temperature pulldown period, shall control the rate of guide vane opening to prevent a rapid increase in compressor power consumption. The controls shall allow configuration of the ramp loading rate in either degrees/minute of chilled water temperature pulldown or percent motor amps/minute. During the ramp loading period, a message shall be displayed informing the operator that the chiller is operating in ramp loading mode.

l. Chilled Water Reset:

The control center shall allow reset of the chilled water temperature set point based on any one of the following criteria:

1) Chilled water reset based on an external 4 to 20 mA signal.
2) Chilled water reset based on a remote temperature sensor (such as outdoor air).
3) Chilled water reset based on water temperature rise across the evaporator.

m. Demand Limit:

The control center shall limit amp draw of the compressor to the rated load amps or to a lower value based on one of the following criteria:

1) Demand limit based on a user input ranging from 40% to 100% of compressor rated load amps.
2) Demand limit based on external 4 to 20 mA signal.

n. Controlled Compressor Shutdown:

The controls shall be capable of being configured to soft stop the compressor. When the stop button is pressed or remote contacts open with this feature active, the guide vanes shall close to a configured amperage level and the machine shall then shut down. The display shall indicate "shutdown in progress."

2. Safeties:

a. Unit shall automatically shut down when any of the following conditions occur. Each of these protective limits shall require manual reset and cause an alarm message to be displayed on the control panel screen, informing the operator of the shutdown cause.

1) Motor overcurrent
2) Over voltage[1]
3) Under voltage[1]
4) Single cycle dropout[1]
5) Bearing oil high temperature (19MVR rolling element bearing units)
6) Low evaporator refrigerant temperature
7) High condenser pressure
8) High motor temperature
9) High compressor discharge temperature
10) Prolonged surge
11) Loss of evaporator water flow
12) Loss of condenser water flow
13) Starter fault.

1. Shall not require manual reset or cause an alarm if auto-restart after power failure is enabled.

b. The control system shall detect conditions that approach protective limits and take self corrective action prior to an alarm occurring. The system shall automatically reduce chiller capacity when any of the following parameters are outside their normal operating range:
   1) High condenser pressure
   2) High motor temperature
   3) Low evaporator refrigerant temperature
   4) Surge prevention control
   5) High motor amps.

c. During the capacity override period, a prealarm (alert) message shall be displayed informing the operator which condition is causing the capacity override. Once the condition is again within acceptable limits, the override condition shall be terminated and the chiller shall revert to normal chilled water control. If during either condition the protective limit is reached, the chiller shall shut down and a message shall be displayed informing the operator which condition caused the shutdown and alarm.

d. Internal built-in safeties shall protect the chiller from loss of water flow. Differential pressure switches shall not be allowed to be the only form of freeze protection.

3. Diagnostics and Service:

a. A self-diagnostic controls test shall be an integral part of the control system to allow quick identification of malfunctioning components.

b. Once the controls test has been initiated, all pressure and temperature sensors shall be checked to ensure they are within normal operating range. A pump test shall automatically energize the chilled water pump, condenser water pump, and oil pump. The control system shall confirm that water flow and oil pressure have been established and require operator confirmation before proceeding to the next test. A guide vane actuator test shall open and close the guide vanes to check for proper operation. The operator manually acknowledges proper guide vane operation prior to proceeding to the next test.

c. In addition to the automated controls test, the controls shall provide a manual test which permits selection and testing of individual control components and inputs. A thermistor test and transducer test shall display and an actual reading shall be performed for each transducer and each thermistor installed on the chiller. All out-of-range sensors shall be identified.

4. Multiple Chiller Control:

   The chiller controls shall be supplied as standard with a two-chiller lead/lag and a third chiller standby system. The control system shall automatically start and stop a lag or second chiller on a two-chiller system. If one of the two chillers on line goes into a fault mode, the third standby chiller shall be automatically started.

   The two-chiller lead/lag system shall allow manual rotation of the lead chiller, include load balancing if configured, and allow a staggered restart of the chillers after a power failure.

G. Electrical Requirements:

1. Electrical contractor shall supply and install main electrical power line, disconnect switches, circuit breakers, and electrical protection devices per local code requirements and as indicated necessary by the chiller manufacturer.
2. Electrical contractor shall wire the chilled water pump, condenser water pump, and tower fan control circuit to the chiller control circuit.
3. Electrical contractor shall supply and install electrical wiring and devices required to interface the chiller controls with the building control system if applicable.
4. Electrical power shall be supplied to the unit at the voltage, phase, and frequency listed in the equipment schedule.

H. Piping Requirements — Instrumentation and Safeties:

a. Mechanical contractor shall supply and install pressure gauges in readily accessible locations in piping adjacent to the chiller such that they can be easily read from a standing position on the floor. Scale range shall be such that design values shall be indicated at approximately midscale.

b. Gauges shall be installed in the entering and leaving water lines of the evaporator and condenser.

I. Isolator Pads:

Chiller manufacturer shall furnish neoprene isolator pads for mounting equipment on a level concrete surface.

J. Start-up:

1. The chiller manufacturer shall provide a factory-trained representative, employed by the chiller manufacturer, to perform the start-up procedures as outlined in the Start-up, Operation, and Maintenance manual provided by the chiller manufacturer.
2. Manufacturer shall supply the following literature:
   a. Start-up, operation, and maintenance instructions.
   b. Installation instructions.
   c. Field wiring diagrams.
   d. One complete set of certified drawings.

K. Special Features:

1. Soleplate Package Accessory:

   Unit manufacturer shall furnish a soleplate package consisting of soleplates, jacking screws, leveling pads, and neoprene pads.

2. Spring Isolators Accessory:

   Field furnished and selected for the desired degree of isolation.

3. Spare Sensors with Leads Accessory:

   Unit manufacturer shall furnish additional temperature sensors and leads.

4. Stand-Alone Pumpout Unit Accessory (R-513A units only):

   A free-standing pumpout shall be provided. The pumpout unit shall use a scroll compressor with water-cooled condenser. Condenser water piping and 3-phase motor power shall be installed at the jobsite by the installing contractor.

5. Separate Storage Tank and Pumpout Unit Accessory (R-513A units only):

   A free-standing refrigerant storage tank and pumpout unit shall be provided. The storage vessels shall be designed per ASME Section VIII Division 1 code with 185 psig (1276 kPa) design pressure. Double relief valves per ANSI/ASHRAE 15, latest edition, shall be provided. The tank shall include a liquid level gauge and pressure gauge. The pumpout unit shall use a scroll compressor with water cooled condenser. Condenser water piping and 3-phase motor power shall be installed at the jobsite by the installing contractor.

6. Refrigerant Charge:

   The chiller shall ship from the factory fully charged with R-515B or R-513A refrigerant. R-1234ze(E) is field charge only.

7. Thermal Insulation:

   Unit manufacturer shall insulate the evaporator shell, economizer, low side compressor suction elbow, motor shell, and motor cooling lines. Insulation shall be 3/4 in. (19 mm) thick with a thermal conductivity not exceeding 0.28 (Btu in.)/hr ft^2 F [(0.0404 • W)/(m • °C)] and shall conform to UL standard 94, classification 94 HBF.

8. Evaporator and Condenser Tubes:

   Contact local Carrier representative for other tube offerings.

9. Evaporator and Condenser Passes:

   Unit manufacturer shall provide the evaporator with 2 pass configuration on the water side.

10. Marine Waterboxes, 150 psig (1034 kPa):

    Unit manufacturer shall furnish marine style waterboxes on evaporator and/or condenser rated at 150 psig (1034 kPa).

11. Flanged Waterbox Nozzles:

    Unit manufacturer shall furnish standard flanged piping connections on the evaporator and/or condenser.

12. Hinges:

    Unit manufacturer shall furnish hinges on waterboxes to facilitate tube cleaning.

13. Unit-Mounted Variable Frequency Drive (VFD) without Built-In Harmonic Filter (available for low voltage only, 19MV3 only):

    a. Design:

       1) VFD shall be air cooled, microprocessor based, pulse width modulated (PWM) design. Water cooled designs are not acceptable.

       2) Output power devices shall be insulated gate bipolar transistors (IGBTs).

       3) Converter section with full-wave fixed diode bridge rectifier shall convert incoming fixed voltage/frequency to fixed DC voltage.

       4) DC link shall filter and smooth the converted DC voltage.

       5) Transistorized inverter and control regulator shall convert fixed DC voltage to a sinusoidal PWM waveform.

       6) Integrated controls shall coordinate motor speed and guide vane position to optimize chiller performance over a wide variety of operating conditions.

       7) Surge prevention and surge protection algorithms shall take action to prevent surge and move chiller operation away from surge.

    b. Enclosure:

       1) Pre-painted, unit-mounted cabinet protected against limited ingress of dust and water splashing shall include hinged doors and removable lifting lugs.

       2) Electrical system shall have a short circuit interrupt and withstand rating of at least 100,000 amps.

       3) Provisions to padlock main disconnect handle in the “Off” position shall be provided. Mechanical interlock to prevent opening cabinet door with disconnect in the “On” position or moving disconnect to the “ON” position while the door is open shall be provided.

       4) Provisions shall be made for top entry of incoming line power cables.

14. Heat Sink:

    The heat sink shall be air cooled.

    a. VFD Rating:

       1) Drive shall be suitable for nameplate voltage ±10%.

2) Drive shall be suitable for continuous operation at 100% of nameplate amps and 150% of nameplate amps for 3 seconds.
3) Drive shall comply with applicable UL, CE, and NEMA standards.
4) Drive shall be suitable for operation in ambient temperatures between 40 and 104°F (4.4 and 40°C), 95% humidity (non-condensing) for altitudes up to 8250 ft (2500 m) above sea level; altitude derating applies after 1000 m. Specific drive performance at jobsite ambient temperature and elevation shall be provided by manufacturer in the bid.

b. User Interface:

Displays shall provide interface for programming and display of VFD and chiller parameters. Viewable parameters include:

1) Operating, configuration, and fault messages.
2) Frequency in hertz.

c. VFD Performance:

1) VFD full load efficiency shall meet or exceed 97% at 100% VFD Rated ampacity.
2) Displacement Input Power Factor shall meet or exceed 94% soft start, linear acceleration, coast to stop.
3) Base motor frequency shall be up to 480 Hz; adjustable frequency range from 0 to 480 Hz.

d. Chiller Electrical Service (single point power):

1) Chiller shall have input circuit breaker with minimum 100,000 amp interrupt capacity.
2) Chiller shall have standard 15 amp branch oil pump circuit breaker to provide power for chiller oil pump.
3) Chiller shall have standard 3 kva control power transformer with circuit breaker to provide power for oil heater, VFD controls and chiller controls.
4) The branch oil pump circuit breaker and control power transformer shall be factory wired.
5) Input power shall be 380/480 vac, ±10 percent, 3 phase, 50/60 Hz, ±3 Hz.

e. Discrete Outputs:

115-v discrete contact outputs shall be provided for:

1) Circuit breaker shunt trip
2) Chilled water pump
3) Condenser water pump
4) Alarm status.

f. Analog Output:

An analog (4 to 20 mA) output for head pressure reference shall be provided. This signal shall be suitable to control a 2-way or 3-way water regulating valve in the condenser piping.

g. Protection — the following shall be supplied:

1) Under-voltage
2) Over voltage
3) Phase loss
4) Phase reversal
5) Ground fault
6) Phase unbalance protection
7) Single cycle voltage loss protection
8) Programmable auto restart after loss of power
9) Motor overload protection (NEMA Class 10)
10) Motor overtemperature protection.

h. VFD Testing:

VFD shall be factory mounted, wired and tested on the chiller prior to shipment.

15. Unit-Mounted Variable Frequency Drive (VFD), Active Front-End, Low Harmonic VFD (PowerFlex 755TL)

a. Design:

1) VFD is air-cooled, microprocessor-based, pulse width modulated (PWM) design.
2) Input and output power devices shall be insulated gate bipolar transistors (IGBTs).
3) Active rectifier shall convert incoming voltage / frequency to DC voltage. Input current and voltage shall be regulated.
4) Transistorized inverter and control regulator shall convert DC voltage to a sinusoidal PWM waveform.
5) Integrated chiller controls shall coordinate motor speed and guide vane position to optimize chiller performance over all chiller operating conditions.
6) Surge prevention and surge protection algorithms shall take action to prevent surge and move chiller operation away from surge.

b. Enclosure:

1) Pre-painted unit mounted, NEMA 1 (IP20) or NEMA 12 (IP54) cabinet shall include hinged, lockable doors and removable lifting lugs.
2) VFD power modules shall have a short circuit interrupt and withstand rating of

100,000 amps (35,000 amps for 575-v units).

3) Provisions to padlock main disconnect handle in the "Off" positions shall be provided. Mechanical interlock to prevent opening cabinet door with disconnect in the "On" position or moving disconnect to the "On" position while the door is open shall be provided.

4) Provisions shall be made for top entry of incoming line power cables.

c. Heat Sink:

The heat sink shall be air cooled.

d. VFD Rating:

1) Drive shall be suitable for continuous operation at nameplate voltage ±10%.

2) Drive shall be suitable for continuous operation at 100% of nameplate amps and 150% of nameplate amps for 3 sec.

3) Drive shall comply with applicable ANSI, NEMA, UL, CE Standards.

4) Drive shall be suitable for operation in ambient temperatures between 40 and 104°F (4.4 and 40°C), 95% humidity (non-condensing) for altitudes up to 6000 ft (1829 m) above sea level. Derating required above 3300 ft (1000 m). Specific drive performance at jobsite ambient temperature and elevation shall be provided by manufacturer in the bid.

e. User Interface:

A single display shall provide interface for programming and display of VFD and chiller parameters. Viewable parameters include:

1) Operating, configuration, and fault messages

2) Frequency in Hz

3) Load and line side voltage and current (at the VFD)

4) kW (line and load side)

5) IGBT temperatures

f. VFD Performance:

1) VFD voltage total harmonic distortion (THD) and harmonic current total demand distortion (TDD) shall not exceed IEEE-519 requirements using the VFD circuit breaker input terminals as the point of common coupling (PCC). Product will meet IEEE-519 requirements at input CB terminals.

2) VFD full load efficiency shall meet or exceed 96% at 100% VFD rated ampacity.

a) Active rectifier shall regulate unity displacement power factor to 0.99 or higher at full load.

b) Soft start, linear acceleration, coast to stop.

c) Base motor frequency shall be up to 480 Hz. Adjustable frequency range from 0 to 480 Hz.

g. VFD Electrical Service (single point power):

1) VFD shall have input circuit breaker with minimum 65,000 amp interrupt capacity, 100,000 amp interrupt available.

2) VFD shall have standard 15 amp branch circuit breaker to provide power for chiller oil pump.

3) VFD shall have standard control power transformer with circuit breaker to provide power for oil heater, VFD controls and chiller controls.

4) The branch oil pump circuit breaker and control power transformer shall be factory wired.

5) Nameplate voltage shall range between 380 and 460 ±10%, 3 phase, 50/60 Hz ±2% Hz.

h. Discrete Outputs:

115-v discrete contact outputs shall be provided for field wired:

1) Chilled water pump

2) Condenser water pump

3) Alarm status

4) Tower fan low

5) Tower fan high

i. Analog Output:

An analog (4 to 20 mA) output for head pressure reference shall be provided. This signal shall be suitable to control a 2-way or 3-way water regulating valve in the condenser piping.

j. Protection (the following shall be supplied):

1) Under-voltage

2) Over voltage

3) Phase loss

4) Phase reversal

5) Ground fault

6) Phase unbalance protection

7) Single cycle voltage loss protection

8) Programmable auto restart after loss of power

9) Motor overload protection

k. VFD Testing:

VFD shall be factory mounted, wired and tested on the chiller prior to shipment.

l. VFD Certifications and Standards:

1) CE Standard including:

a) Low Voltage Directive

Guide specifications (cont)

b) EMC Directive
c) Machinery Directive
d) Standards applied; EN 61800-3/ EN 61800-5-1
e) EMC Directive (2014/30/EU)
f) Low Voltage Directive (2014/35/EU)
g) RoHS Directive (2011/65/EU)

2) UL 61800-5-1 and 61800-5-2
3) cUL
4) UKCA (EMC, LVD, MD, RHoS).
5) TÜV and Rheinland Standards (with Safe I/O) applied:
   a) IEC 61508 PARTS 1…7
   b) EN 61800-3 EN 61800-5-1
   c) IEC 61800-5-2 EN
   d) ISO 13849-1
   e) IEC 62061
   f) ISO 60204-1
   g) Machinery Directive (2006/42/EC)

Product Submittal for Hi Delta®- Type Heating Boiler Models 992C-2342C

Date: 4/11/2025 Job: _____ Location: _____

Equipment Tags: _____ Engineer: _____ Contractor: _____

Model: H9-2002C Notes: _____

Prepared by: _____ Indoor ☐ Outdoor ☒ Gas Type: Natural Gas ☒ Propane ☐

100% Factory fire-tested

Thermal efficiency: 84%

Versa IC® Controller with LCD display

Maximum setpoint: 220°F (104°C)

Maximum outlet temperature: 240°F (116°C)

Minimum non-condensing inlet temperature: 105°F (41°C)

Thermal shock proof heat exchanger

Limited 20-year thermal shock warranty

Limited 10-year heat exchanger warranty (closed-loop)

Full safety diagnostics with fault history

Polytuf powder-coated cabinet

No combustible floor shield required

Fan-assisted

Patented burner security blanket

Cascade up to 8 heaters – no external sequencer needed

Cascade in parallel or sequential modulation modes

SCAQMD Rule 1146.2 certified, Low NOx < 20 ppm (992C-2002C)

Proudly assembled in the USA

Raypak® A Rheem® Company

Product Submittal for Hi Delta®- Type

Job: _____

Features and Options

Heat Exchanger

- Headers
  - ■ Glass-lined cast iron (standard)
  - ☐ A-1 Bronze (optional)
- ASME H-Stamped; 160 PSIG MAWP
- National Board registered
- Fin tubing
  - ■ Copper (standard)
  - ☐ A-3 Cupronickel
- ASME steel tube sheet
- Silicone high temp. O-rings
- ASME Pressure relief valve
  - ■ 60 PSIG (standard)
  - ☐ ____PSIG (optional)
- T&P Gauge
- Water connections
  - ■ Left-hand (standard)
  - ☐ A-6 Right-hand

Power

- 120V, 60Hz, 1Ø, Power supply
- 120/24V, 60Hz, Transformer

Control

- Versa IC® Integrated control
- 100% Shutoff/lockout
- Hot Surface Ignition (HSI)
- Cascade up to 8 heaters
- Parallel and sequential modulation cascade modes
- Water temperature sensors 10kΩ (2 mtd, 3 loose, 1 well)
- Ignition Module
  - ■ 3-Try (standard)
  - ☐ C-6 Single-try
- Remote flame sensor
- High limit, manual-reset, fixed 240°F (104°C)
- On/off power switch
- Flow switch
- Blocked vent pressure switch
- Low gas pressure switch, manual-reset
- Combustion air proving switch
- Programmable pump time delays
- Pump outputs
  - Boiler
  - System–pilot duty
  - DHW indirect–pilot duty
- Enable/disable
- LCD Display; status, fault and diagnostics
- Modbus RTU BMS Port (Up to 115K baud rate, see Manual 241515)
  - ☐ B-85 – BMS Gateway – BACnet MS/TP, BACnet IP, N2 Metasys or Modbus TCP
  - ☐ B-86 – BMS Gateway – LonWorks
- Cold water protection function
  - ☐ CWR Variable-speed pump
  - ■ CWS Proportional valve

Gas Train

- Manual gas shutoff valve(s)
- Combo valve(s)
- Firing mode
  - ☐ H8 3-Stage (model 992C only)
  - ■ H9 4-Stage (models 1262C-2342C)
- Fuel
  - ■ Natural gas
  - ☐ Propane gas (minimum grade HD-5, excludes model 2002C)
  - ☐ G-20 4" W.C. NAT supply pressure
- Design Certified - ANSI Z21.13/CSA 4.9

Construction

- Indoor/outdoor construction
- Front controls enclosed
- PolyTuf powder-coat finish CSA low-lead certified (≤ .25% Lead)

Venting

- Vent location
  - ■ Top (standard)
  - ☐ D-14 Rear flue exhaust tee
- Vent termination cap
  - ■ D-11 Vent termination, outdoor
  - ☐ D-15 Vent termination, sidewall (Cat III)
  - ☐ Indoor, vertical (by others)
- Combustion air
  - ☐ D-12 Barometric damper w/o thermoswitch
  - ☐ D-16 Air intake elbow
  - ☐ D-17 In-line filter kit (TruSeal only)
  - ☐ D-18 Boiler vent adapter (Cat III & IV)
  - ☐ D-19 Vent termination cap adapter (Cat III & IV)
  - ☐ D-20 Vent termination vertical (Cat I)
  - ☐ D-21* Truseal direct vent air intake (factory-installed)
  - ☐ D-22* Truseal direct vent air intake (field-installed) (*must be used with D-17 inline filter kit)
  - ☐ D-23 Outdoor vent supports
  - ☐ D-37 Motorized combustion air damper (field-installed)

Options

- ☐ A-20 30 PSIG MAWP
- ■ B-32 Outdoor air sensor
- ☐ B-65 Indirect tank aquastat control
- ☐ E-5 Alarm with 4" bell
- ■ F-10 Low water cut-off, remote probe
- ■ I-1 Adj. high limit, auto-reset 240°F (115.6°C) max
- ☐ I-2 Adj. high limit, manual-reset, 240°F (115.6°C) max
- ☐ I-5 Adj. high limit, manual-reset, 200°F (93.3°C) max
- ☐ I-13 Adj. high limit, auto-reset, 200°F (93.3°C) max
- ☐ M-1 Safety valve, motorized
- ☐ M-10 Safety valve, solenoid
- ☐ M-15 Gas vent valve (requires either M-1 or M-10)
- ■ P__ Pump: 1.5 HP, 120V, 1Ø, 60Hz
  - ☐ Bronze ■ Cast Iron
  - ☐ Mounted ■ Loose
  - ■ Front ☐ Rear
- ☐ S-2 High gas pressure switch, manual-reset
- ☐ X-1 SureRack® Kit
- ☐ X-2 SureRack Add-on
- ☐ X-3 SureRack restraint brackets
- ☐ Z-4 T&P relief valve
- ☐ Z-9 Thermometer
- ☒ G-12 CAL CODE/S-1 LOW GAS SAFETY

Additional Options or Accessories

- ☒ B-31WELLASSEMBLY/P-29CWASVALVE

Multi-Boiler Temperature Controllers

- ☐ TempTracker Mod+ Hybrid
- ☐ B-36, 2-4 Heaters
- ☐ B-37, 5-10 Heaters
- ☐ B-38, 11-16 Heaters
- ☐ B-39* EMS 4-20 mA remote setpoint interface module
- ☐ B-62* BACnet MS/TP Interface (*requires B-36 to B-38)

Raypak® A Rheem® Company

Product Submittal for Hi Delta®- Type

Job: _____

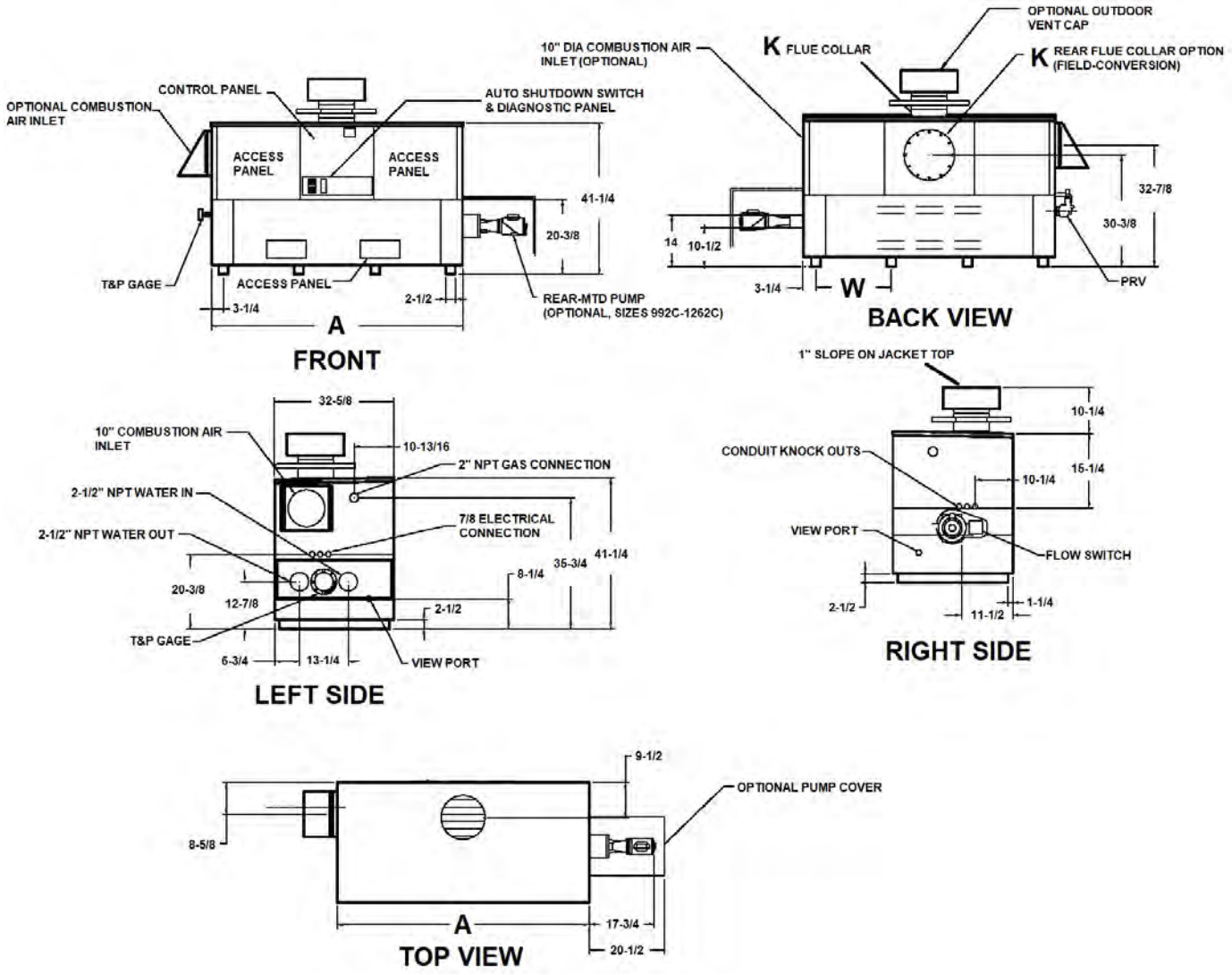

SPECIFICATIONS								
Model	MBTUH (kW)		Dimensions - Inches (mm)					
	Input	Output	Firing Stages	A Width	Flue Collar K	W	Amp. Draw*	Approx. Shipping Wt. Lbs. (Kg)
☐ 992C	990 (290)	832 (244)	3	57-1/8 (1451)	10 (254)	16-13/16 (427)	<12	900 (408)
☐ 1262C	1260 (369)	1058 (310)	4	68-1/2 (1740)	12 (305)	20-9/16 (522)	<12	1010 (458)
☐ 1532C	1530 (448)	1285 (377)	4	79-7/8 (2029)	12 (305)	24-3/8 (619)	<12	1225 (556)
☐ 1802C	1800 (528)	1512 (443)	4	91-1/8 (2315)	14 (356)	28-1/8 (714)	<12	1350 (612)
■ 2002C	1999 (586)	1679 (492)	4	102-1/2 (2604)	14 (356)	31-15/16 (811)	<12	1450 (658)
☐ 2072C	2070 (607)	1739 (510)	4	102-1/2 (2604)	14 (356)	31-15/16 (811)	<12	1450 (658)
☐ 2342C	2340 (686)	1966 (576)	4	113-7/8 (2892)	16 (406)	35-11/16 (902)	<12	1520 (689)

*Without pump

NOTES:
1.Rates shown are for natural or propane gas, and elevations up to 4,500 feet (1372 m). De-rate above 4,500 ft.
2.Required natural gas pressure is 5.6" – 10.5" (178 - 267) WC. Required propane gas pressure is 11 - 13" (279 - 330) WC.

Raypak® A Rheem® Company

Product Submittal for Hi Delta®- Type

Job: _____

RATES OF FLOW AND PRESSURE DROPS										
Model	20°F ΔT		30°F ΔT		Minimum Flow			Maximum Flow*		
	GPM (L/min)	ΔP (FT.)	GPM (L/min)	ΔP (FT.)	GPM (L/min)	ΔP (FT.)	ΔT °F (°C)	GPM (L/min)	ΔP (FT.)	ΔT °F (°C)
☐ 992C	84 (318)	5.6	56 (212)	2.5	43 (163)	1.5	39 (21.6)	132 (500)	14	13 (7.2)
☐ 1262C	107 (406)	10	71 (269)	4.5	54 (205)	2.6	39 (21.6)	132 (500)	15.5	16 (8.8)
☐ 1532C	130 (493)	16	86 (326)	7.1	66 (250)	4.1	39 (21.6)	132 (500)	16.5	20 (11.1)
☐ 1802C			102 (387)	10.8	78 (296)	6	39 (21.6)	132 (500)	18	23 (12.7)
■ 2002C			113 (428)	14	86 (326)	8.1	39 (21.6)	132 (500)	19.5	26 (14.4)
☐ 2072C			117 (443)	15	89 (337)	8.7	39 (21.6)	132 (500)	19.5	27 (14.9)
☐ 2342C			132 (500)	21	101 (383)	12	39 (21.6)	132 (500)	21	30 (16.6)

*Basis is 40°F ΔT for minimum flow, 132 GPM for maximum flow.

Outdoor Unit Heat Pump Ductless System

Outdoor Model: **37MARAQ24AA3**

Carrier

Turn to the experts

Job Data: _____ **Location:** _____

Tag #: _____ **Carrier#:** _____

Date: _____

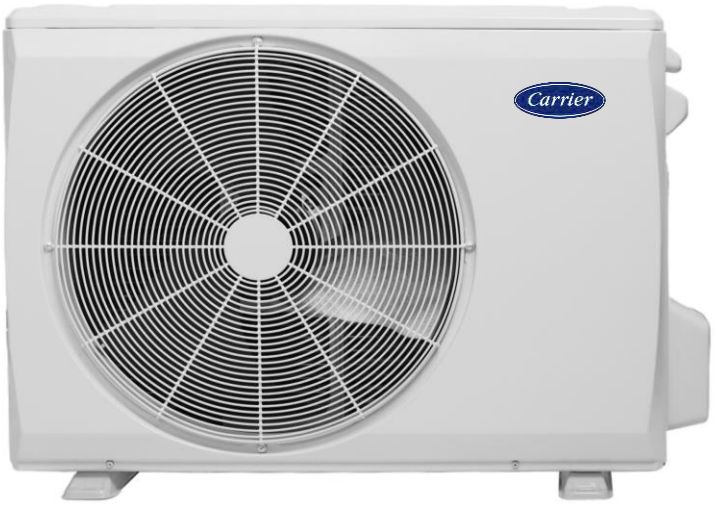

OUTDOOR STANDARD FEATURES

- Variable Speed (Inverter)
- Factory installed Base Pan Heater
- Factory installed Crankcase Heater
- Low Voltage Controls
- Auto-Restart function
- Condenser High Temp Protection
- Quiet operation
- Anti-corrosive fin coating

RESIDENTIAL APPLICATION LIMITED WARRANTY*

- Ten (10) years if properly registered within ninety (90) days after original installation, parts are warranted to the original purchaser for a period of ten (10) years. Otherwise, parts warranty is five (5) years.

NOTE: Images for illustration purposes only. Actual models may be slightly different.

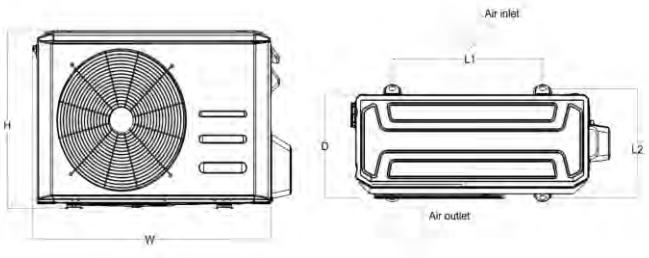

OUTDOOR UNIT DIMENSIONS						
Capacity	**Unit**	**W**	**D**	**H**	**L1**	**L2**
9K/12K	mm	765	303	555	452.4	313.82
	inch	30.12	11.93	21.85	17.81	12.36
18K	mm	890	342	673	663	379.59
	inch	35.04	13.46	26.5	26.1	14.94
24K ~ 36K	mm	946	410	810	672.96	454.8
	inch	37.24	16.14	31.89	26.49	17.19

Outdoor - Heat Pump			
System	**Outdoor Model #**		37MARAQ24AA3
	Outdoor Size		24000
Electrical	Voltage, Phase, Cycle	V/Ph/Hz	208-230/1/60
	MCA	A.	24
	MOPA	A.	25
	SCCR	kA	5
Operating Range	Cooling Outdoor DB Min - Max	°F(°C)	-13~122(-25～50)
	Heating Outdoor DB Min - Max	°F(°C)	-13~75(-25～24)
Piping	Min. Piping Length	ft (m)	9.8 (3)
	Standard Piping Length	ft. (m)	24.6 (7.5)
	Total Piping Length	ft (m)	164.04(50)
	Piping Lift*	ft (m)	82.02(25)
	Pipe Connection Size - Liquid	in (mm)	3/8in(9.52mm)
	Pipe Connection Size - Suction	in (mm)	5/8in(15.9mm)
Refrigerant	Refrigerant Type		R454B
	Charge	lbs (kg)	4.41(2.0)
	Add'l Refrigerant (between Std & Max Piping Lengths)	Oz/ft (g/m)	0.32(30)
Outdoor Coil	Face Area	Sq. Ft.	8.18
	No. Rows		2.6
	Fins per inch		20
	Circuits		6
Compressor	Type		ROTARY
	Model		KTM240D46UKT2
	Oil Type		ESTER OIL
	Oil Charge	Fl. Oz.	20.97
	Rated Current	RLA	1.05
Airflow & Sound	Airflow	CFM	2237.9
	Sound Pressure	dB(A)	58
Dimensions	Height	in (mm)	31.89(810)
	Width	in (mm)	37.24(946)
	Depth	in (mm)	16.14(410)
	Net Weight	lbs (kg)	122.14(55.4)
	Shipping Height	in (mm)	34.84(885)
	Shipping Width	in (mm)	42.91(1090)
	Shipping Depth	in (mm)	19.68(500)
	Shipping Net Weight	lbs (kg)	132.28(60)

*** Condensing unit above or below indoor unit**

AHRI CERTIFIED www.ahridirectory.org Unitary Small HP AHRI Standard 210/240

C SP US

Puron Advance™

Carrier Corporation Copyright 2024 • Atlanta, GA, 30339
SUBJECT TO CHANGE WITHOUT NOTICE

High Wall Heat Pump Ductless System

Indoor Model: 45MAHAQ24XA3

Turn to the experts

Job Data: _____ **Location:** _____

Tag #: _____ **Carrier#:** _____

Date: _____

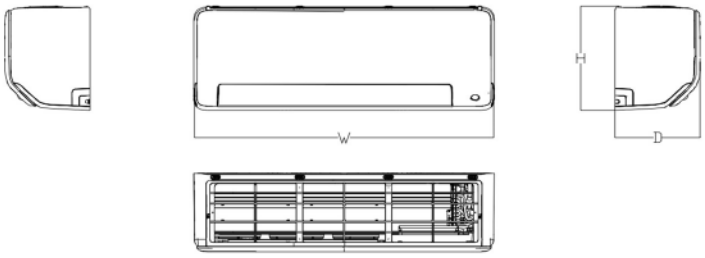

INDOOR STANDARD FEATURES
- Modes: Cool, Heat, Dry, Fan, Auto
- Four fan speeds
- Sleep Mode
- Turbo Mode
- Follow Me (senses temperature at handheld remote)
- Auto-Restart function
- Quiet indoor operation
- Anti-corrosive fin coating

RESIDENTIAL APPLICATION LIMITED WARRANTY*
- Ten (10) years if properly registered within ninety (90) days after original installation, parts are warranted to the original purchaser for a period of ten (10) years. Otherwise, parts warranty is five (5) years.

NOTE: Images for illustration purposes only. Actual models may be slightly different.

INDOOR UNIT DIMENSIONS				
Capacity	Unit	W	D	H
6K/9K/12K	mm	795	225	295
	inch	31.3	8.86	11.61
18K	mm	965	239	319
	inch	37.99	9.41	12.56
24K ~ 36K	mm	1140	275	370
	inch	44.88	10.83	14.57

45MAHAQ24XA3			
System	Indoor Model #		45MAHAQ24XA3
	Indoor Size		24000
Electrical	Voltage, Phase, Cycle	V/Ph/Hz	208/230-1-60
	Power Supply		Indoor unit powered by outdoor unit
	MCA	A.	3
Operating Range	Cooling Indoor DB Min - Max	°F(°C)	60~90(16～32)
	Heating Indoor DB Min - Max	°F(°C)	32~86(0～30)
Indoor Coil	Face Area	Sq. Ft.	3.6
	No. Rows		3
	Fins per inch		20
	Circuits		7
Indoor Unit	Number of Fan Speeds		1000/850/630
	Airflow (highest to lowest)	CFM	812.3 / 618.0 / 412.0 / 317.8 / /
	Sound Pressure (highest to lowest)	dB(A)	54.5/43.5/38.5/27/16
	Moisture Removal	L/h	2.7
	Air Throw Data	ft(m)	30.1(9.18)
Dimensions	Height	in (mm)	14.57(370)
	Width	in (mm)	44.88(1140)
	Depth	in (mm)	10.83(275)
	Net Weight	lbs (kg)	43.65(19.8)
	Shipping Height	in (mm)	13.98(355)
	Shipping Width	in (mm)	48.43(1230)
	Shipping Depth	in (mm)	17.91(455)
	Shipping Net Weight	lbs (kg)	55.56(25.2)
CONTROLS			
Standard	Wireless Remote Controller (°F/°C Convertible)		
Optional	Wired Remote Control 7 Day Programmable		KSACN1401AAA
	Wired Remote Control with Timer Function		KSACN1201AAA
	Wi-Fi™ Kit High Wall		KSAIF0701AAA
	24V Mini Interface		KSAIC0601230

Carrier Corporation Copyright 2024 • Atlanta, GA, 30339
SUBJECT TO CHANGE WITHOUT NOTICE

Puron Advance™

SUBMITTAL

Project

Climatec - City of Esc - City Hall

Date

Saturday, April 12, 2025

Shawn Harlan
Sigler - Brea
205 Puente Street
Brea CA

Table Of Contents

Project: Climatec - City of Esc - City Hall
Prepared By: Shawn Harlan

04/13/2025
09:04AM

ID 3,16 ..... **3**
Unit Report 4
Certified Drawing 5
Performance Summary 8
ID 14 ..... **11**
Unit Report 12
Performance Summary 13
System Parameters 13
Electrical Data 13
Acoustic Summary 14
Certified Drawing 15

ID 3,16

Tag Cover Sheet
Unit Report
Certified Drawing
Performance Report

Unit Report For ID 3,16

Project: Climatec - City of Esc - City Hall
Prepared By: Shawn Harlan

04/13/2025
09:04AM

Unit Parameters

Unit Model: **50FEQM12A2M6-0A0A0**
Unit Size: **12 (10 Tons)**
Volts-Phase-Hertz: **460-3-60**
Heating Type: **Heat Pump**
Refrigerant: **R-454B**
Heat Control: **Two-Stage Cooling, Single Circuit**
Duct Cfg: **Horizontal Supply / Horizontal Return**

Dimensions (ft. in.) & Weight (lb.) ***

Unit Length: **7' 4.125"**
Unit Width: **4' 11.5"**
Unit Height: **4' 1.375"**
Total Operating Weight: **972** lb

*** Weights and Dimensions are approximate. Weight does not include unit packaging. Approximate dimensions are provided primarily for shipping purposes. For exact dimensions and weights, refer to appropriate product data catalog.

Lines and Filters

Return Air Filter Type: **Throwaway**
Return Air Filter Quantity: **4**
Return Air Filter Size: **20 x 20 x 2**

Selection includes construction throwaway filter into the base fan curve.

Unit Configuration

Standard/Medium Static - EcoBlue Vane Axial Fan
Al/Cu - Al/Cu - Louvered Hail Guards
Standard Electromechanical Controls (can be used with field installed economizers and dampers)
Standard

Warranty Information

1-Year parts (STD.)
5-Year Compressor (std.)

No optional warranties were selected.

NOTE: Please see Warranty Catalog 500-089 for explanation of policies and ordering methods.

Ordering Information

Part Number	Description	Quantity
50FEQM12A2M6-0A0A0	Rooftop Unit	1
Field Installed Accessories		
CRWINSTR001A00	Winter Start Package	1

Certified Drawing for ID 3,16

Project: Climatec - City of Esc - City Hall
Prepared By: Shawn Harlan

04/13/2025
09:04AM

NOTES:

1. DIMENSIONS ARE IN INCHES. DIMENSIONS IN [ ] ARE IN MILLIMETERS.
2. CENTER OF GRAVITY
3. DIRECTION OF AIR FLOW
4. ALL VIEW DRAWN USING 3RD ANGLE

UNIT	OUTDOOR COIL TYPE	H
50FEQ-12	RTPF	15 7/8 [403]
RTPF - ROUND TUBE, PLATE FIN (COPPER/ALUM)		

Carrier
THIS DOCUMENT IS THE PROPERTY OF CARRIER CORPORATION AND IS DELIVERED UPON THE EXPRESS CONDITION THAT THE CONTENTS WILL NOT BE DISCLOSED OR USED WITHOUT CARRIER CORPORATION'S WRITTEN CONSENT.
SUBMISSION OF THESE DRAWINGS OR DOCUMENTS DOES NOT CONSTITUTE PART PERFORMANCE OR ACCEPTANCE OF CONTRACT.

	CONNECTION SIZES
A	1 3/8" [35] DIA FIELD POWER SUPPLY HOLE
B	2 1/2" [64] DIA POWER SUPPLY KNOCKOUT
C	1 3/4" [51] DIA GAUGE ACCESS PLUG
D	7/8" [22] DIA FIELD CONTROL WIRING HOLE
E	3/4"-14 NPT CONDENSATE DRAIN
G	2" [51] DIA POWER SUPPLY KNOCK-OUT

THRU-THE-BASE CHART THESE HOLES REQUIRED FOR USE CRBTMPWR002A01			
	THREADED CONDUIT SIZE	WIRE USE	REQ'D HOLE SIZES (MAX.)
W	1/2"	ACC.	7/8" [22.2]
X	1/2"	24V	7/8" [22.2]
Y	1 1/4" (002)	POWER	1 3/4" [44.4]
	FOR "THRU-THE-BASEPAN" FACTORY OPTION, FITTINGS FOR ONLY X & Y ARE PROVIDED		

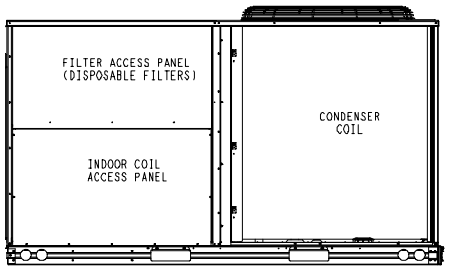

BACK

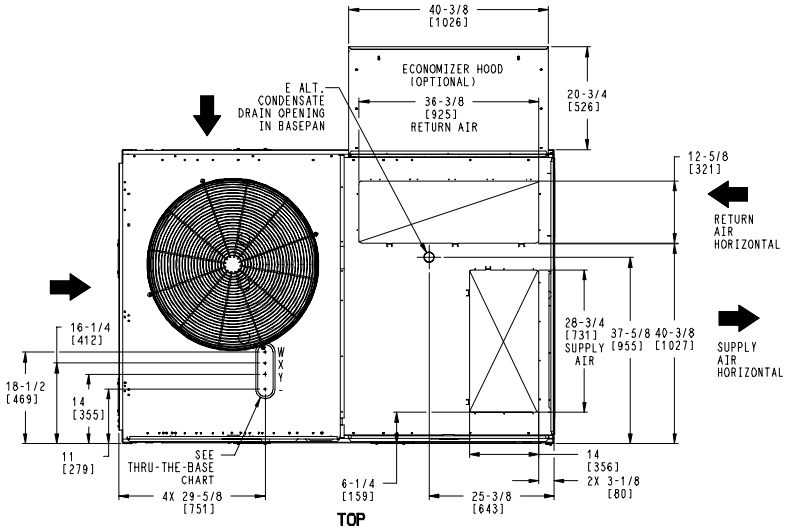

TOP

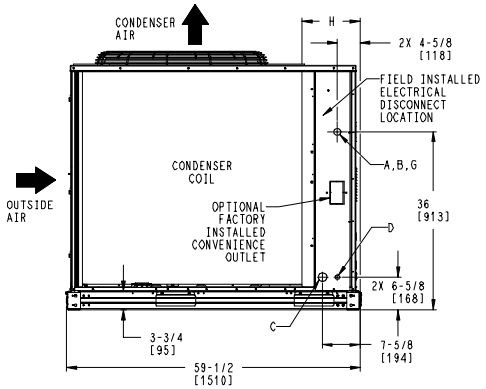

LEFT

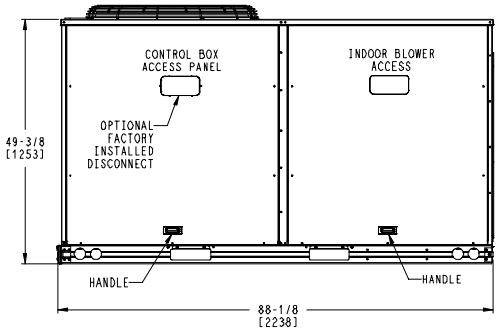

FRONT

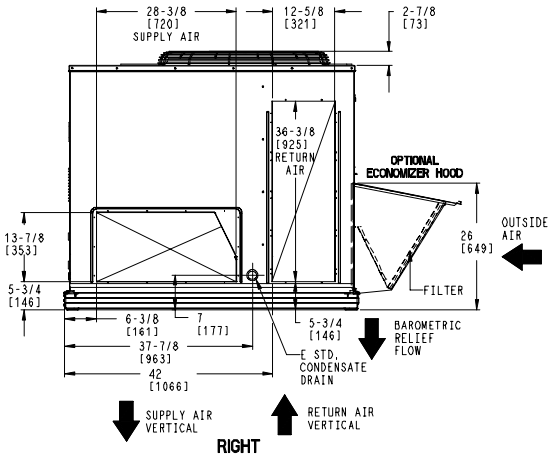

RIGHT

ITC CLASSIFICATION	SHEET	DATE	SUPERCEDES			REV
U.S. ECCN:NSR	1 OF 3	02/20/24	-	50FEQ 12 SINGLE ZONE ELECTRICAL HEAT PUMP	48TM009810	-

Certified Drawing for ID 3,16

Project: Climatec - City of Esc - City Hall
Prepared By: Shawn Harlan

04/13/2025
09:04AM

UNIT	OUTDOOR COIL TYPE	STD. UNIT WEIGHT***		CORNER WEIGHT (A)		CORNER WEIGHT (B)		CORNER WEIGHT (C)		CORNER WEIGHT (D)		C.G.		
		LBS.	KG.	LBS.	KG.	LBS.	KG.	LBS.	KG.	LBS.	KG.	X	Y	Z
50FEQ-12	RTPF	955	433	239	108	194	88	234	106	288	131	39 1/2 [1003]	32 1/2 [826]	19 1/8 [486]
RTPF - ROUND TUBE, PLATE FIN (COPPER/ALUM)														

*** STANDARD UNIT WEIGHT IS WITHOUT ELECTRIC HEAT AND WITHOUT PACKAGING.
FOR OTHER OPTIONS AND ACCESSORIES, REFER TO THE PRODUCT DATA CATALOG.

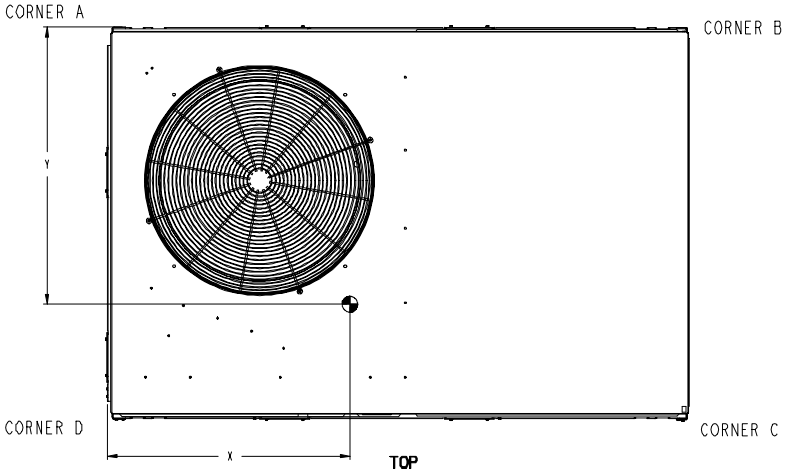

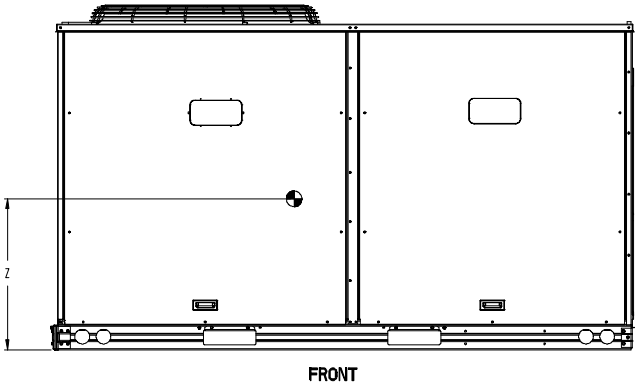

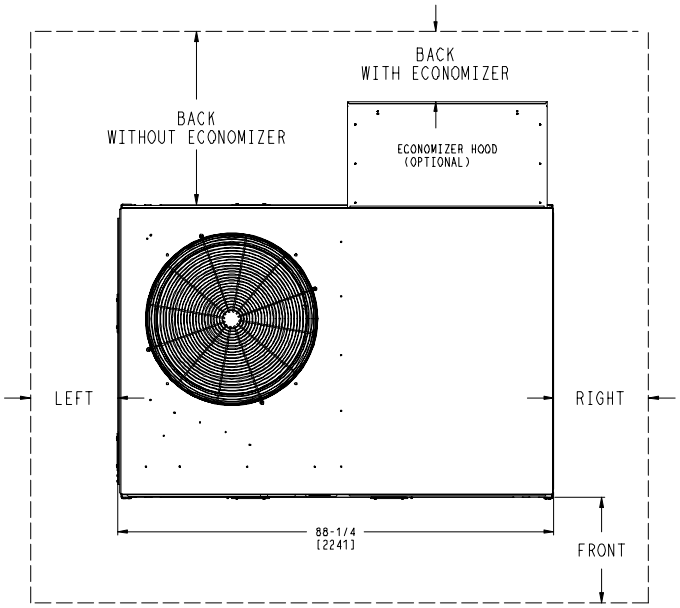

NOTE:

1. FOR ALL MINIMUM CLEARANCES LOCAL CODES OR JURISDICTIONS MAY PREVAIL.

	CLEARANCE	
	SERVICE WITH:	SERVICE WITH:
SURFACE	CONDUCTIVE BARRIER	NONCONDUCTIVE BARRIER
FRONT	48 [1219mm]	36 [914mm]
LEFT	48 [1219mm]	42 [1067mm]
BACK W/O ECON	48 [1219mm]	42 [1067mm]
BACK W/ECON	36 [914mm]	36 [914mm]
RIGHT	36 [914mm]	36 [914mm]
TOP	72 [1829mm]	72 [1829mm]

ITC CLASSIFICATION	SHEET	DATE	SUPERCEDES			REV
U.S. ECCN:NSR	2 OF 3	02/20/24	-	50FEQ 12 SINGLE ZONE ELECTRICAL HEAT PUMP	48TM009810	-

THIS DOCUMENT IS THE PROPERTY OF CARRIER CORPORATION AND IS DELIVERED UPON THE EXPRESS CONDITION THAT THE CONTENTS WILL NOT BE DISCLOSED OR USED WITHOUT CARRIER CORPORATION'S WRITTEN CONSENT.

SUBMISSION OF THESE DRAWINGS OR DOCUMENTS DOES NOT CONSTITUTE PART PERFORMANCE OR ACCEPTANCE OF CONTRACT.

Certified Drawing for ID 3,16

Project: Climatec - City of Esc - City Hall
Prepared By: Shawn Harlan

04/13/2025
09:04AM

Carrier | THIS DOCUMENT IS THE PROPERTY OF CARRIER CORPORATION AND IS DELIVERED UPON THE EXPRESS CONDITION THAT THE CONTENTS WILL NOT BE DISCLOSED OR USED WITHOUT CARRIER CORPORATION'S WRITTEN CONSENT. | SUBMISSION OF THESE DRAWINGS OR DOCUMENTS DOES NOT CONSTITUTE PART PERFORMANCE OR ACCEPTANCE OF CONTRACT.

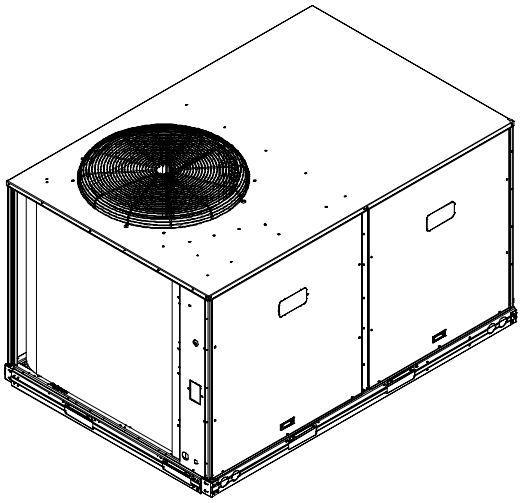

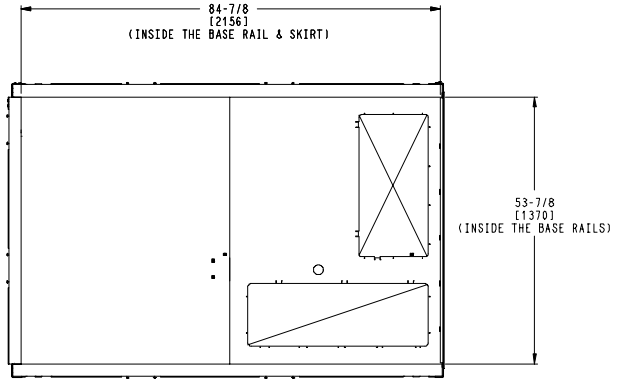

INSIDE BASERAIL DIMENSIONS
BOTTOM

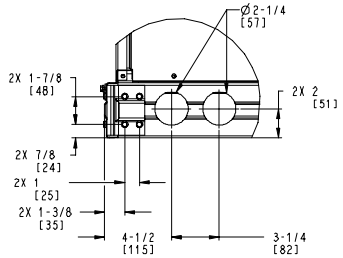

DETAIL **B**
TYP 2 PLCS

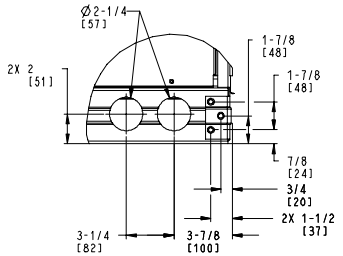

DETAIL **C**
TYP 2 PLCS

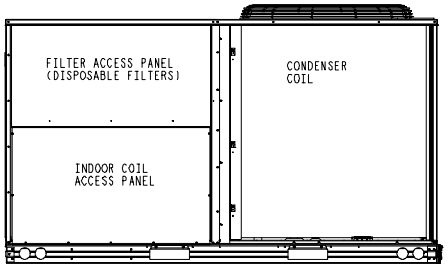

BACK

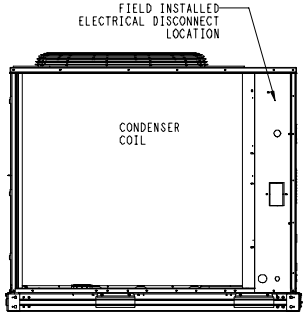

LEFT

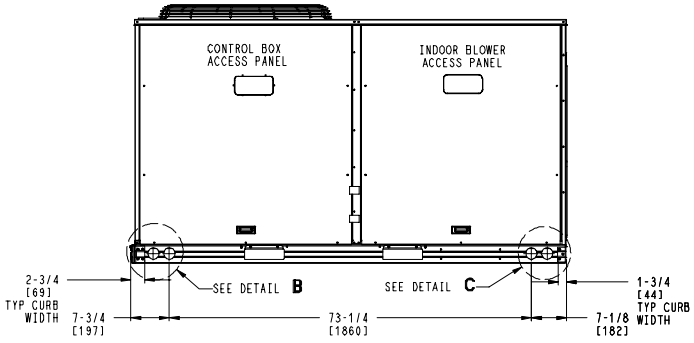

FRONT

ITC CLASSIFICATION	SHEET	DATE	SUPERCEDES			REV
U.S. ECCN:NSR	3 OF 3	02/20/24	-	50FEQ 12 SINGLE ZONE ELECTRICAL HEAT PUMP	48TM009810	-

Performance Summary For ID 3,16

Project: Climatec - City of Esc - City Hall 04/13/2025
Prepared By: Shawn Harlan 09:04AM

Part Number:50FEQM12A2M6-0A0A0

Refrigerant:	**R-454B**	
ARI EER:	**11.00**	
Application EER (Rooftop Unit only):	**11.07**	
IEER:	**15.0**	

Base Unit Dimensions

Unit Length:	**88.1**	in
Unit Width:	**59.5**	in
Unit Height:	**49.4**	in

Operating Weight

Base Unit Weight:	**955**	lb
Al/Cu - Al/Cu - Louvered Hail Guards:	**16**	lb
Accessories		
Winter Start Package:	**1**	lb
Total Operating Weight:	**972**	lb

Unit

Unit Voltage-Phase-Hertz:	**460-3-60**	
Air Discharge:	**Horizontal**	
Fan Drive Type:	**Vane Axial**	
Actual Airflow:	**4000**	CFM
Site Altitude:	**0**	ft

Cooling Performance

Condenser Entering Air DB:	**95.0**	F
Evaporator Entering Air DB:	**80.0**	F
Evaporator Entering Air WB:	**67.0**	F
Entering Air Enthalpy:	**31.44**	BTU/lb
Evaporator Leaving Air DB:	**57.6**	F
Evaporator Leaving Air WB:	**56.9**	F
Evaporator Leaving Air Enthalpy:	**24.35**	BTU/lb
Unit Discharge Air DB:	**58.8**	F
Unit Discharge Air WB:	**57.4**	F
Unit Discharge Air Enthalpy:	**24.62**	BTU/lb
Gross Cooling Capacity:	**127.67**	MBH
Net Cooling Capacity:	**122.65**	MBH
Gross Sensible Capacity:	**96.60**	MBH
Net Sensible Capacity:	**91.58**	MBH
Compressor Power Input:	**9.01**	kW
Coil Bypass Factor:	**0.041**	

Heating Performance

Outdoor Ambient Temperature:	**47.0**	F
Entering Air Indoor Coil DB:	**70.0**	F
Leaving Air Indoor Coil DB:	**96.4**	F
Total Heating Capacity:	**113.90**	MBH
Integrated Heating Capacity:	**113.90**	MBH
Heating Power Input:	**9.40**	kW
High Temperature COP:	**3.40**	
Low Temperature COP:	**2.25**	

Supply Fan

External Static Pressure:	**1.00**	in wg
Fan RPM:	**1716**	
Fan Power:	**1.72**	BHP
NOTE:	**Selected IFM RPM Range: 1100 - 2000**	

Selection includes construction throwaway filter into the base fan curve. This filter is not MERV Rated.

Performance Summary For ID 3,16

Project: Climatec - City of Esc - City Hall
Prepared By: Shawn Harlan

04/13/2025
09:04AM

Electrical Data

Voltage Range:	**414 - 506**
Compressor #1 RLA:	**8.3**
Compressor #1 LRA:	**58**
Compressor #2 RLA:	**8.3**
Compressor #2 LRA:	**58**
Indoor Fan Motor Type:	**MED**
Indoor Fan Motor FLA (Total):	**3**
Power Supply MCA:	**30**
Power Supply MOCP (Fuse or HACR):	**35**
Disconnect Size FLA:	**31**
Disconnect Size LRA:	**127**
Electrical Convenience Outlet:	**None**
Outdoor Fan [Qty / FLA (ea)]:	**1 / 7.4**

Control Panel SCCR: 5kA RMS at Rated Symmetrical Voltage

Acoustics

Sound Power Levels, db re 10E-12 Watts

	Discharge	Inlet	Outdoor
63 Hz	91.6	53.3	88.1
125 Hz	86.7	81.0	90.0
250 Hz	82.0	75.5	85.9
500 Hz	79.7	72.0	83.0
1000 Hz	80.8	71.1	81.6
2000 Hz	77.4	65.8	78.5
4000 Hz	71.7	56.3	76.4
8000 Hz	63.6	49.1	75.5
A-Weighted	84.7	75.3	87.0

Advanced Acoustics

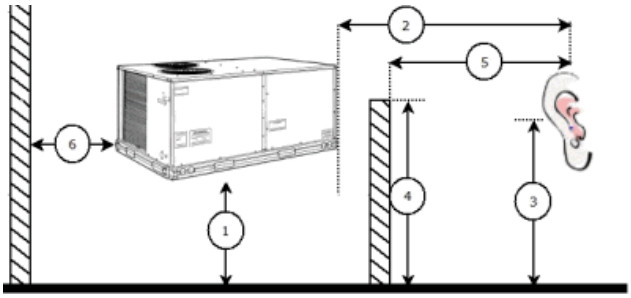

Advanced Accoustics Parameters

1. Unit height above ground:	**30.0**	ft
2. Horizontal distance from unit to receiver:	**50.0**	ft
3. Receiver height above ground:	**5.7**	ft
4. Height of obstruction:	**0.0**	ft
5. Horizontal distance from obstruction to receiver:	**0.0**	ft
6. Horizontal distance from unit to obstruction:	**0.0**	ft

Detailed Acoustics Information

Performance Summary For ID 3,16

Project: Climatec - City of Esc - City Hall
Prepared By: Shawn Harlan

04/13/2025
09:04AM

Octave Band Center Freq. Hz	63	125	250	500	1k	2k	4k	8k	Overall
A	88.1	90.0	85.9	83.0	81.6	78.5	76.4	75.5	94.0 Lw
B	61.9	73.9	77.3	79.8	81.6	79.7	77.4	74.4	87.0 LwA
C	55.7	57.6	53.5	50.6	49.2	46.1	44.0	43.1	61.6 Lp
D	29.5	41.5	44.9	47.4	49.2	47.3	45.0	42.0	54.6 LpA

Legend
A Sound Power Levels at Unit's Acoustic Center, Lw
B A-Weighted Sound Power Levels at Unit's Acoustic Center, LwA
C Sound Pressure Levels at Specific Distance from Unit, Lp
D A-Weighted Sound Pressure Levels at Specific Distance from Unit, LpA

Calculation methods used in this program are patterned after the ASHRAE Guide; other ASHRAE Publications and the AHRI Acoustical Standards. While a very significant effort has been made to insure the technical accuracy of this program, it is assumed that the user is knowledgeable in the art of system sound estimation and is aware of the tolerances involved in real world acoustical estimation. This program makes certain assumptions as to the dominant sound sources and sound paths which may not always be appropriate to the real system being estimated. Because of this, no assurances can be offered that this software will always generate an accurate sound prediction from user supplied input data. If in doubt about the estimation of expected sound levels in a space, an Acoustical Engineer or a person with sound prediction expertise should be consulted.

Fan Curve

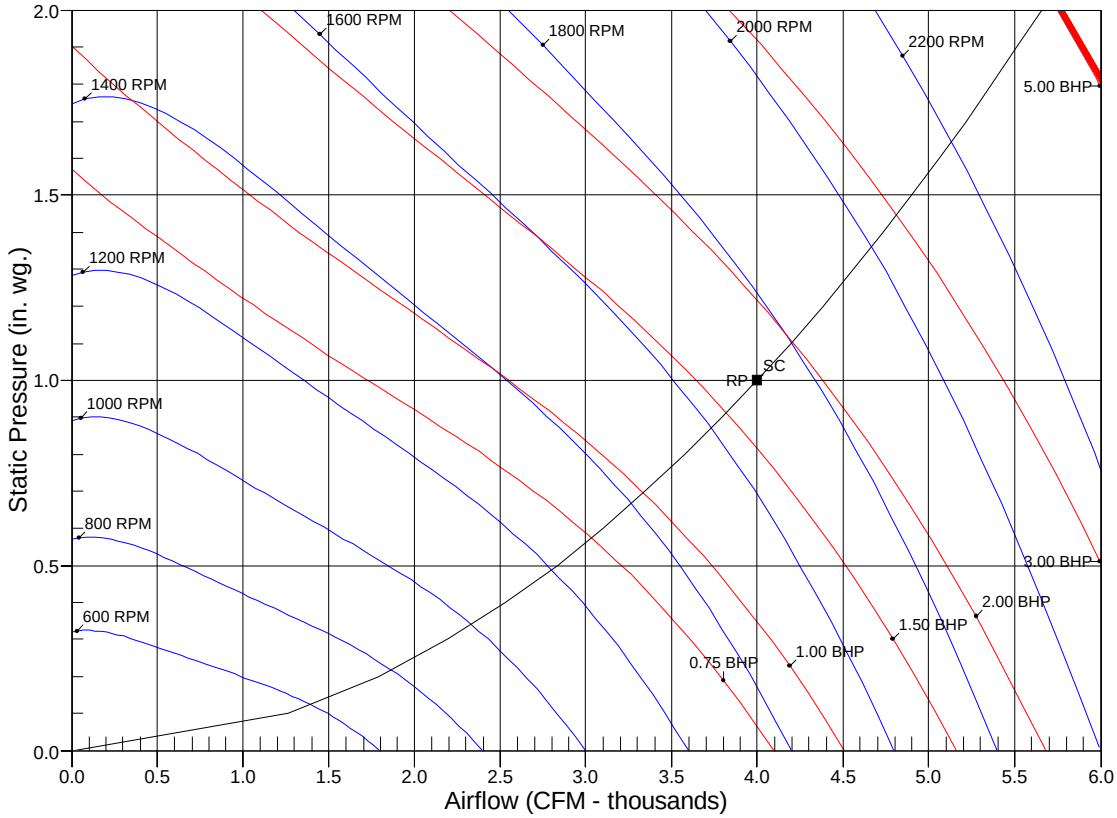

RPM = 1716 BHP = 1.72 Maximum RPM = 2200 Maximum BHP = 5.00
SC - System Curve RP - Rated Point

ID 14

Submittal Cover Sheet
Unit Report
Performance Summary Report
Acoustic Summary
Certified Drawings

Unit Report For ID 14

Project: Climatec - City of Esc - City Hall
Prepared By: Shawn Harlan

04/13/2025

Outdoor Unit Parameters

Unit Model:	**27SCA**	
Unit Size:	**2 Tons (Size 24)**	
Voltage:	**208/230-1-60**	V-Ph-Hz

Indoor Coil Parameters

Unit Model:	**FT5A**	
Unit Size:	**24,000 Btuh**	
Cabinet Insulation:	**Singular, TXV**	
Voltage:	**208-1-60**	V-Ph-Hz
Refrigerant Type:	**Puron Advance**	
Heating Size:	**No Heat**	

Outdoor Unit Dimensions and Weight

Unit Length:	**31.1875**	in
Unit Width:	**31.1875**	in
Unit Height:	**35.5**	in
Unit Shipping Weight:	**196.**	lb

Indoor Coil Dimensions and Weight

Unit Length:	**22.06**	in
Unit Width:	**17.6**	in
Unit Height:	**42.69**	in
Unit Shipping Weight:	**124.**	lb

RESIDENTIAL APPLICATIONS

This warranty is to the original purchasing owner and subsequent owners only to the extent and as stated in the Warranty Conditions and below. The limited warranty period in years, depending on the part and the claimant, is as shown in the table below.

Limited Warranty (Years)		
Item	**Original Owner**	**Subsequent Owner**
Parts	10* (or 5)	5
Compressor	10* (or 5)	5

***If properly registered within 90 days of original installation, otherwise 5 years (except in California and Quebec and other jurisdictions that prohibit warranty benefits conditioned on registration). See Warranty Conditions below.**

OTHER APPLICATIONS

The warranty period is five (5) years on the compressor, and one (1) year on all other parts. The warranty is the original owner only and is not available for subsequent owners.

Ordering Information

Part Number	Description	Quantity
Outdoor Unit		
27SCA524A003	27SCA Comfort Single Stage Heat Pump with Puron Refrigerant Advanced 2 Tons Cooling	1
	15 SEER @ ARI Conditions	
Indoor Coil		
FT5ANXB24L00	Performance Series Fan Coil with Puron Advance 208/230-1-60	1
	Singular, TXV	
	Aluminum	

The Product and Ratings Data in this program is subject to change at any time and without notice. Please refer to the latest product literature and the AHRI directory at www.ahridirectory.org for the most up-to-date information.

Performance Summary For ID 14

Project: Climatec - City of Esc - City Hall
Prepared By: Shawn Harlan
04/13/2025

System Performance

System:	**27SCA/FT5A**	
System Quantity:	**1**	
Altitude:	**0.0**	ft
Linear Pipe Length:	**0.0**	ft
COP @ 47 F:	**3.88**	
COP @ 17 F:	**2.62**	
SEER @ ARI Conditions:	**15.5**	
EER @ ARI Conditions:	**12.0**	
HSPF @ ARI Conditions:	**7.8**	

Actual Clg Airflow:	**800.0**	CFM
Standard Clg Airflow:	**800.0**	CFM
Total Net Clg Capacity:	**22.81**	MBH
Net Sensible Clg Capacity:	**17.23**	MBH
Htg HP Capacity:	**24.06**	MBH
Htg HP Integrated Capacity:	**24.06**	MBH
Heating HP Compressor Power:	**1.73**	kW
Total System Power:	**2.41**	kW

System Parameters

Outdoor Unit Parameters

Unit Model:	**27SCA524A003**	
Unit Size (Nominal):	**2 Tons (Size 24)**	
Voltage:	**208/230-1-60**	V-Ph-Hz
Clg Ent Air DB Ambient:	**95.0**	°F
Htg Ent Air DB Ambient:	**47.0**	°F

Indoor Coil Parameters

Unit Model:	**FT5ANXB24L00**	
Unit Size (Nominal):	**24,000 Btuh**	
Voltage:	**208-1-60**	V-Ph-Hz
Ent Air DB:	**80.00**	°F
Ent Air WB:	**67.00**	°F
Ent Enthalpy:	**31.44**	BTU/lb
Lvg Air DB:	**60.05**	°F
Lvg Air WB:	**58.11**	°F
Lvg Enthalpy:	**25.10**	BTU/lb
Htg Ent Air DB:	**70.0**	°F
Htg Lvg Air DB:	**97.8**	°F
Heating Size (Nominal):	**No Heat**	
Total External Static Pressure:	**0.50**	in wg

Electrical Data

Outdoor Electrical Data

Unit Voltage:	**208/230-1-60**	V-Ph-Hz
Fan Motor FLA:	**0.60**	Amps
MCA:	**13.5**	Amps
Max Fuse:	**20**	Amps
Operating Range Min:	**197**	V
Operating Range Max:	**253**	V
Compressor RLA:	**10.3**	Amps
Compressor LRA:	**64.4**	Amps

Indoor Electrical Data:

(For units with no factory installed electric heaters)

Unit Voltage:	**208-1-60**	V-Ph-Hz
Unit FLA:	**4.0**	Amps
Unit MCA:	**5.0**	Amps
Unit MOCP:	**15.0**	Amps
Unit Min Wire Size:	**14.0**	
Unit Fuse/Ckt Bkr Amps:	**15.0**	Amps
Motor HP:	**1/2**	HP

Notice: Indoor Elect. data is for 208-1-60 voltage

The Product and Ratings Data in this program is subject to change at any time and without notice. Please refer to the latest product literature and the AHRI directory at www.ahridirectory.org for the most up-to-date information.

Acoustic Summary For ID 14

Project: Climatec - City of Esc - City Hall 04/13/2025
Prepared By: Shawn Harlan

Outdoor Unit Parameters:

Unit Model: **27SCA**
Unit Size: **2 Tons (Size 24)**
Variations: **Standard**

Octave Band Center Frequency, Hz	125	250	500	1k	2k	4k	8k	dBA
Sound Power,dB	66.3	64.7	64.2	64.4	59.2	55.6	54.7	
A-Weighted Sound Power, dBA								71.0

Indoor Coil Parameters:

Unit Model: **FT5A**
Unit Size: **24,000 Btuh**
Cabinet Insulation: **Singular, TXV**

Octave Band Center Frequency, Hz	63	125	250	500	1k	2k	4k
Sound Power,dB	72.0	68.0	64.0	61.0	59.0	57.0	53.0

The Product and Ratings Data in this program is subject to change at any time and without notice. Please refer to the latest product literature and the AHRI directory at www.ahridirectory.org for the most up-to-date information.

Certified Drawing For ID 14

Project: Climatec - City of Esc - City Hall
Prepared By: Shawn Harlan

04/13/2025

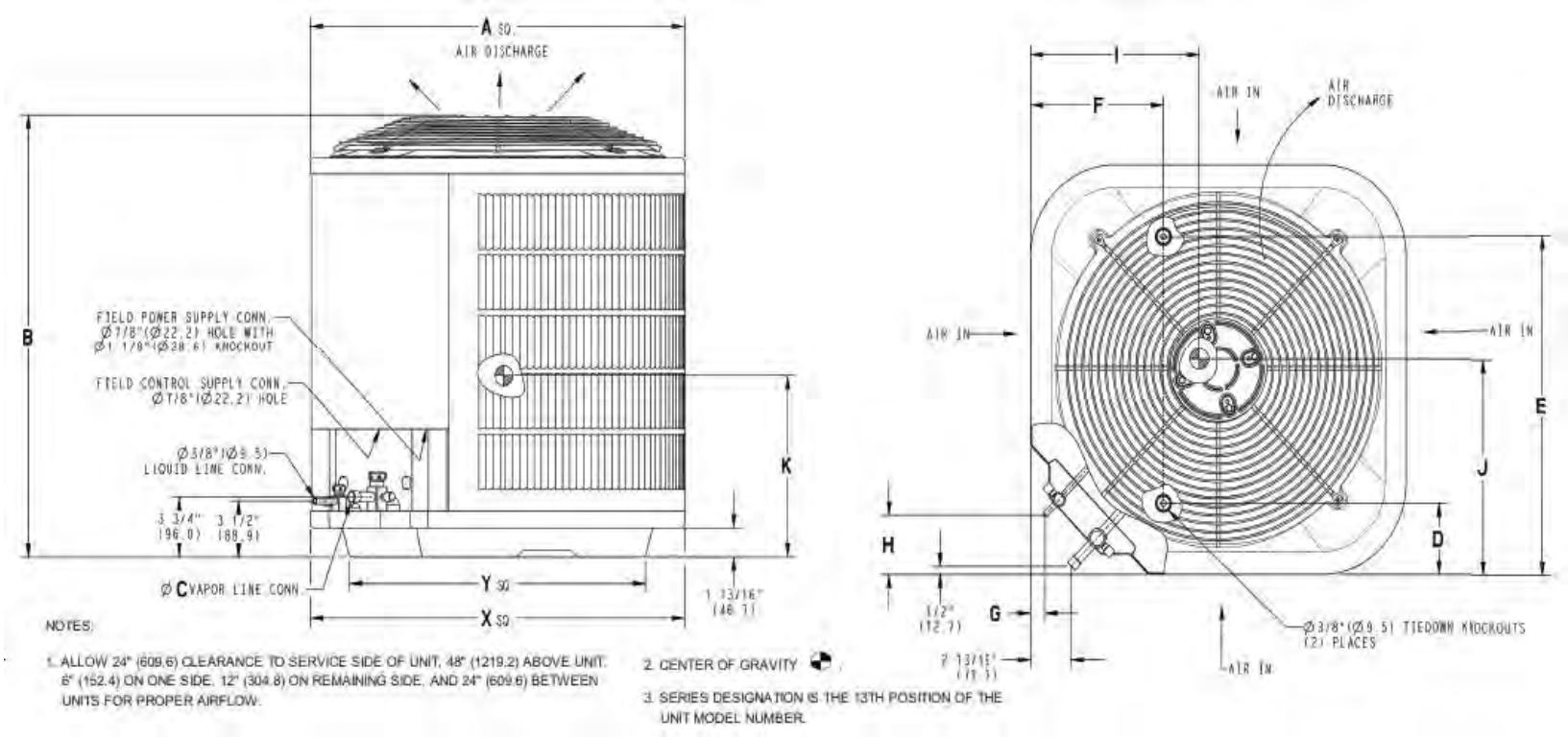

Outdoor Model

Unit Model:	**27SCA**	
Unit Size:	**2 Tons (Size 24)**	
Voltage:	**208/230-1-60**	V-Ph-Hz
SEER:	**15**	
PartNumber:	**27SCA524A003**	

Shipping Dimensions and Weights	Outdoor Unit
Height	39.81 in
Width	34.25 in
Length	34.25 in
Operating Weight	176. lb
Shipping Weight	196. lb

Dimensions										
A	B	C	D	E	F	G	H	I	J	K
31.19 in	35.50 in	0.63 in	6.56 in	24.69 in	9.13 in	1.13 in	3.81 in	13.00 in	15.13 in	16.50 in

The Product and Ratings Data in this program is subject to change at any time and without notice. Please refer to the latest product literature and the AHRI directory at www.ahridirectory.org for the most up-to-date information.

Certified Drawing For ID 14

Project: Climatec - City of Esc - City Hall
Prepared By: Shawn Harlan

04/13/2025

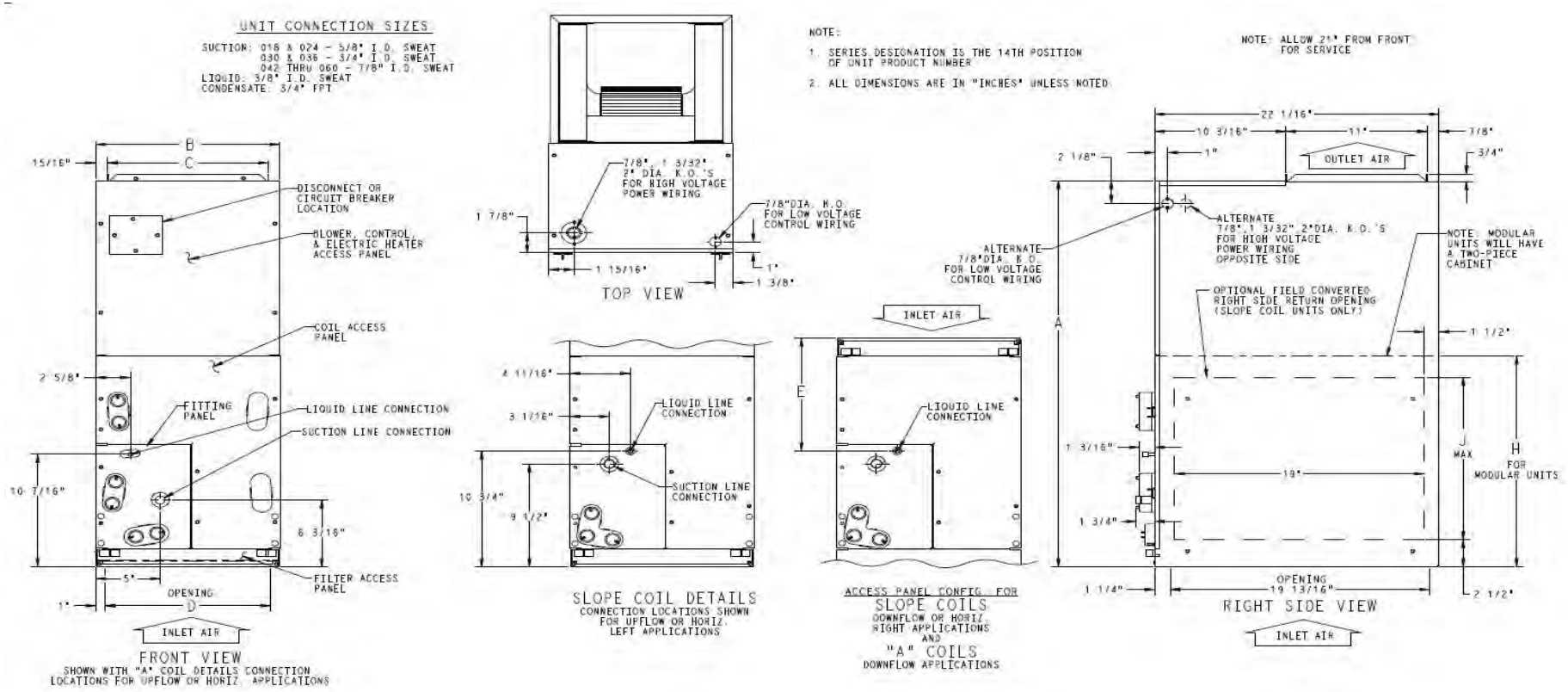

Indoor Coil

Unit Model: **FT5A**
Unit Size: **24,000 Btuh**
Voltage: **208-1-60** V-Ph-Hz
Cabinet Insulation: **Singular, TXV**
PartNumber: **FT5ANXB24L00**

Dimensions and Weights	Indoor Coil
Height	42.69 in
Width	17.63 in
Length	22.06 in
Shipping Weight	124. lb

Dimensions								
A	B	C	D	E	F	G	H	J
42.69 in	17.63 in	15.75 in	15.63 in	10.75 in	18.56 in	18.25 in	--	--

The Product and Ratings Data in this program is subject to change at any time and without notice. Please refer to the latest product literature and the AHRI directory at www.ahridirectory.org for the most up-to-date information.

Certified Drawing For ID 14

Project: Climatec - City of Esc - City Hall
Prepared By: Shawn Harlan

04/13/2025

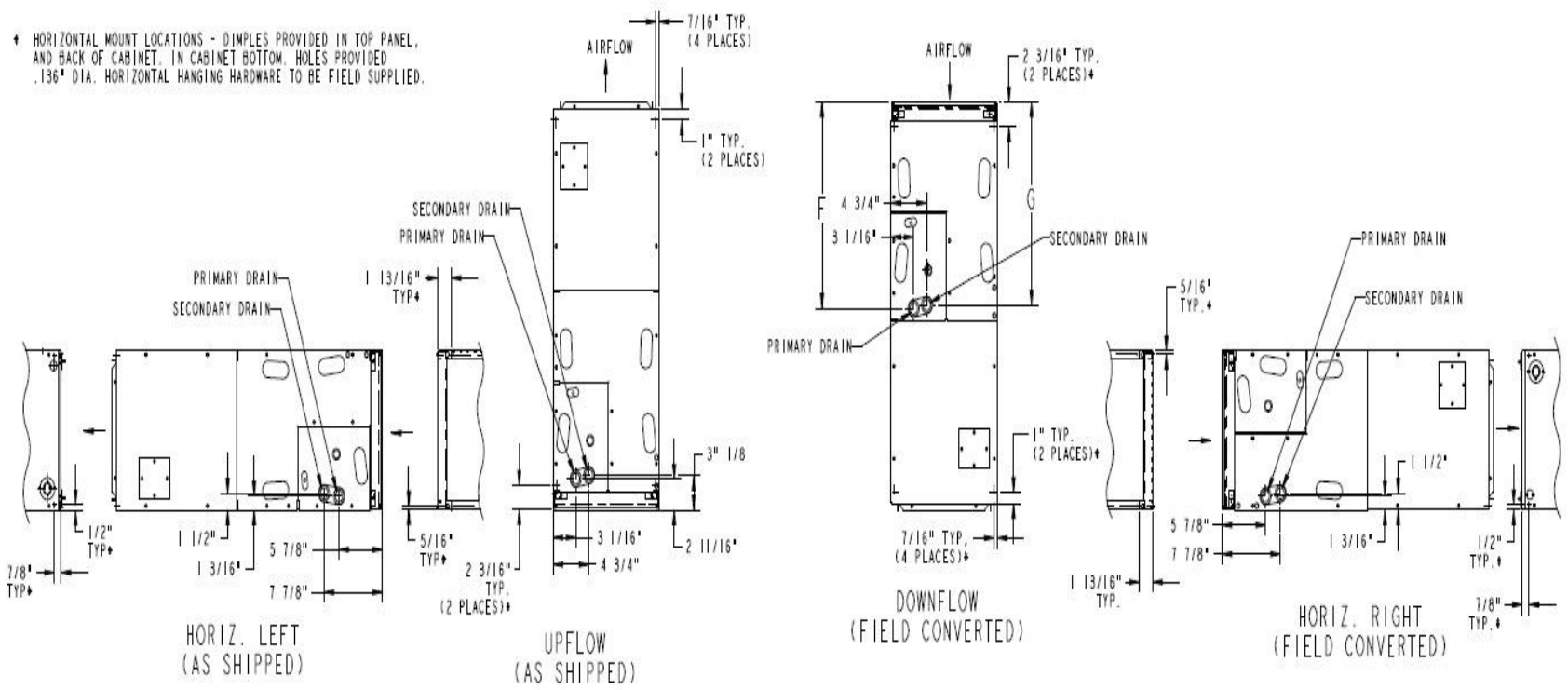

A-COIL

Indoor Coil

Unit Model:	**FT5A**	
Unit Size:	**24,000 Btuh**	
Voltage:	**208-1-60**	V-Ph-Hz
PartNumber:	**FT5ANXB24L00**	

The Product and Ratings Data in this program is subject to change at any time and without notice. Please refer to the latest product literature and the AHRI directory at www.ahridirectory.org for the most up-to-date information.

SUBMITTAL

Project

Climatec - City of Esc - City Hall

Date

Saturday, April 12, 2025

Shawn Harlan
Sigler - Brea
205 Puente Street
Brea CA

Table Of Contents

Project: Climatec - City of Esc - City Hall 04/12/2025
Prepared By: Shawn Harlan 04:29PM

ID 3,16 ..... **3**
Unit Report 4
Certified Drawing 5
Performance Summary 8

ID 3,16

Tag Cover Sheet
Unit Report
Certified Drawing
Performance Report

Unit Report For ID 3,16

Project: Climatec - City of Esc - City Hall
Prepared By: Shawn Harlan

04/12/2025
04:29PM

Unit Parameters

Unit Model: **50FEQM12A2M6-0A0A0**
Unit Size: **12 (10 Tons)**
Volts-Phase-Hertz: **460-3-60**
Heating Type: **Heat Pump**
Refrigerant: **R-454B**
Heat Control: **Two-Stage Cooling, Single Circuit**
Duct Cfg: **Horizontal Supply / Horizontal Return**

Dimensions (ft. in.) & Weight (lb.) ***

Unit Length: **7' 4.125"**
Unit Width: **4' 11.5"**
Unit Height: **4' 1.375"**
Total Operating Weight: **972** lb

*** Weights and Dimensions are approximate. Weight does not include unit packaging. Approximate dimensions are provided primarily for shipping purposes. For exact dimensions and weights, refer to appropriate product data catalog.

Lines and Filters

Return Air Filter Type: **Throwaway**
Return Air Filter Quantity: **4**
Return Air Filter Size: **20 x 20 x 2**

Selection includes construction throwaway filter into the base fan curve.

Unit Configuration

Standard/Medium Static - EcoBlue Vane Axial Fan
Al/Cu - Al/Cu - Louvered Hail Guards
Standard Electromechanical Controls (can be used with field installed economizers and dampers)
Standard

Warranty Information

1-Year parts (STD.)
5-Year Compressor (std.)

No optional warranties were selected.

NOTE: Please see Warranty Catalog 500-089 for explanation of policies and ordering methods.

Ordering Information

Part Number	Description	Quantity
50FEQM12A2M6-0A0A0	Rooftop Unit	1
Field Installed Accessories		
CRWINSTR001A00	Winter Start Package	1

Certified Drawing for ID 3,16

Project: Climatec - City of Esc - City Hall
Prepared By: Shawn Harlan

04/12/2025
04:29PM

NOTES:

1. DIMENSIONS ARE IN INCHES. DIMENSIONS IN [ ] ARE IN MILLIMETERS.
2. CENTER OF GRAVITY
3. DIRECTION OF AIR FLOW
4. ALL VIEW DRAWN USING 3RD ANGLE

UNIT	OUTDOOR COIL TYPE	H
50FEQ-12	RTPF	15 7/8 [403]
RTPF - ROUND TUBE, PLATE FIN (COPPER/ALUM)		

Carrier
THIS DOCUMENT IS THE PROPERTY OF CARRIER CORPORATION AND IS DELIVERED UPON THE EXPRESS CONDITION THAT THE CONTENTS WILL NOT BE DISCLOSED OR USED WITHOUT CARRIER CORPORATION'S WRITTEN CONSENT.
SUBMISSION OF THESE DRAWINGS OR DOCUMENTS DOES NOT CONSTITUTE PART PERFORMANCE OR ACCEPTANCE OF CONTRACT.

	CONNECTION SIZES
A	1 3/8" [35] DIA FIELD POWER SUPPLY HOLE
B	2 1/2" [64] DIA POWER SUPPLY KNOCKOUT
C	1 3/4" [51] DIA GAUGE ACCESS PLUG
D	7/8" [22] DIA FIELD CONTROL WIRING HOLE
E	3/4"-14 NPT CONDENSATE DRAIN
G	2" [51] DIA POWER SUPPLY KNOCK-OUT

THRU-THE-BASE CHART THESE HOLES REQUIRED FOR USE CRBTMPWR002A01			
	THREADED CONDUIT SIZE	WIRE USE	REQ'D HOLE SIZES (MAX.)
W	1/2"	ACC.	7/8" [22.2]
X	1/2"	24V	7/8" [22.2]
Y	1 1/4" (002)	POWER	1 3/4" [44.4]
	FOR "THRU-THE-BASEPAN" FACTORY OPTION, FITTINGS FOR ONLY X & Y ARE PROVIDED		

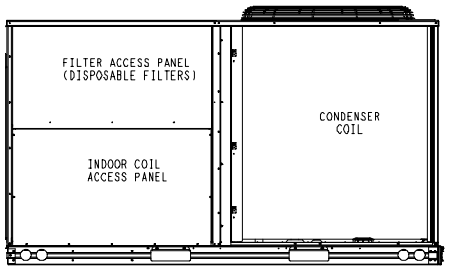

BACK

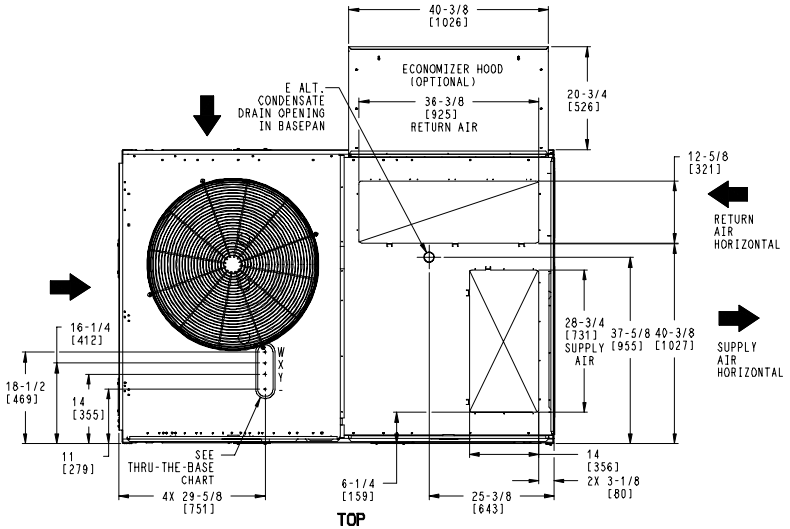

TOP

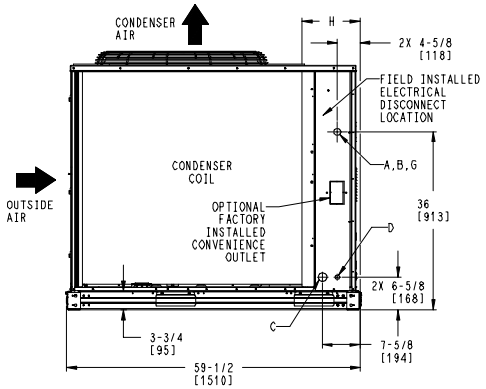

LEFT

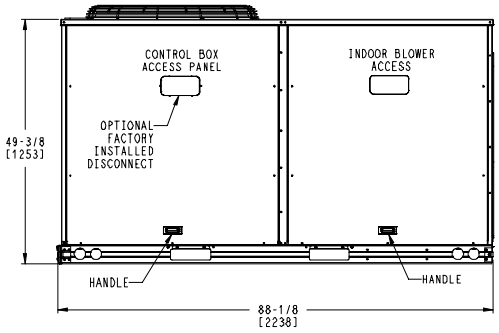

FRONT

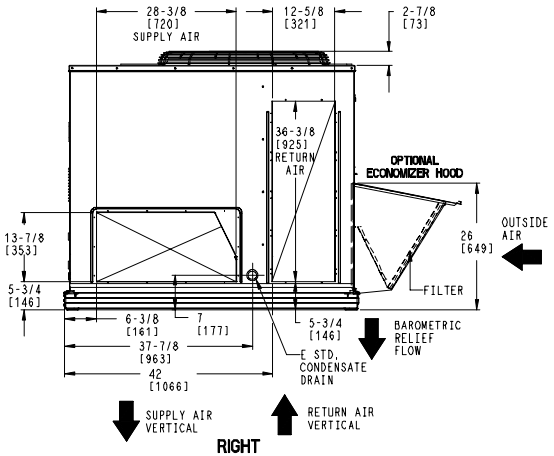

RIGHT

ITC CLASSIFICATION	SHEET	DATE	SUPERCEDES			REV
U.S. ECCN:NSR	1 OF 3	02/20/24	-	50FEQ 12 SINGLE ZONE ELECTRICAL HEAT PUMP	48TM009810	-

Certified Drawing for ID 3,16

Project: Climatec - City of Esc - City Hall
Prepared By: Shawn Harlan

04/12/2025
04:29PM

UNIT	OUTDOOR COIL TYPE	STD. UNIT WEIGHT***		CORNER WEIGHT (A)		CORNER WEIGHT (B)		CORNER WEIGHT (C)		CORNER WEIGHT (D)		C.G.		
		LBS.	KG.	LBS.	KG.	LBS.	KG.	LBS.	KG.	LBS.	KG.	X	Y	Z
50FEQ-12	RTPF	955	433	239	108	194	88	234	106	288	131	39 1/2 [1003]	32 1/2 [826]	19 1/8 [486]
RTPF - ROUND TUBE, PLATE FIN (COPPER/ALUM)														

*** STANDARD UNIT WEIGHT IS WITHOUT ELECTRIC HEAT AND WITHOUT PACKAGING.
FOR OTHER OPTIONS AND ACCESSORIES, REFER TO THE PRODUCT DATA CATALOG.

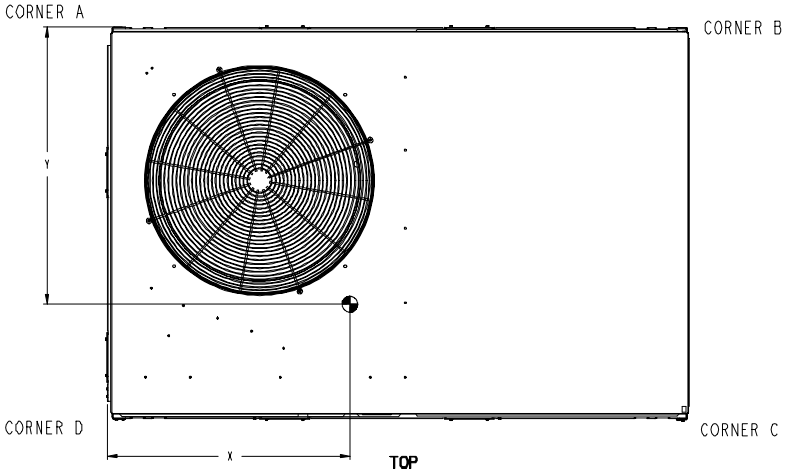

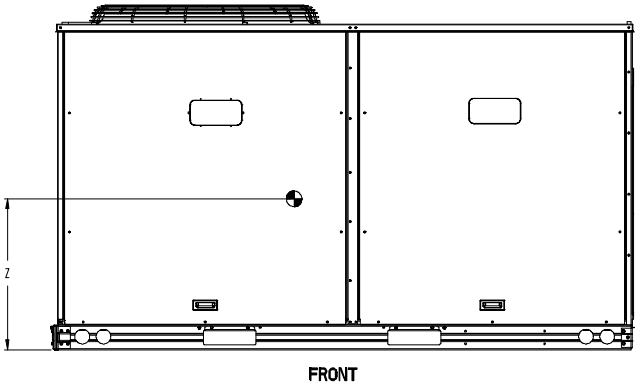

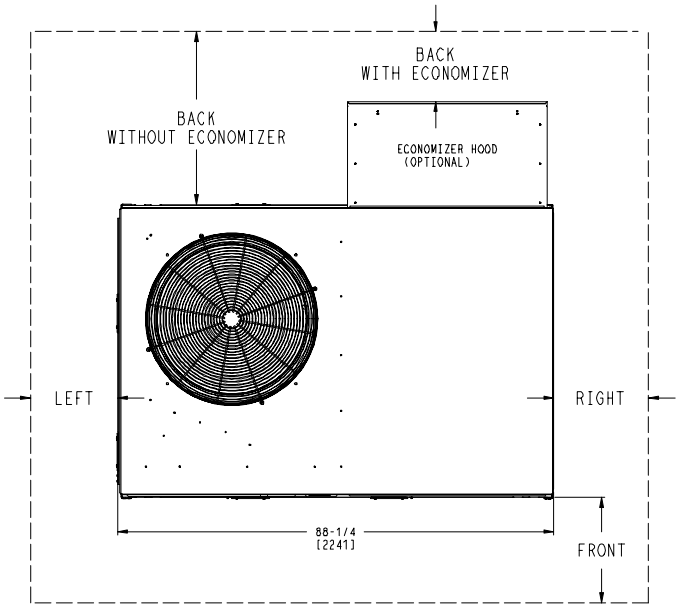

NOTE:

1. FOR ALL MINIMUM CLEARANCES LOCAL CODES OR JURISDICTIONS MAY PREVAIL.

	CLEARANCE	
	SERVICE WITH:	SERVICE WITH:
SURFACE	CONDUCTIVE BARRIER	NONCONDUCTIVE BARRIER
FRONT	48 [1219mm]	36 [914mm]
LEFT	48 [1219mm]	42 [1067mm]
BACK W/O ECON	48 [1219mm]	42 [1067mm]
BACK W/ECON	36 [914mm]	36 [914mm]
RIGHT	36 [914mm]	36 [914mm]
TOP	72 [1829mm]	72 [1829mm]

ITC CLASSIFICATION	SHEET	DATE	SUPERCEDES			REV
U.S. ECCN:NSR	2 OF 3	02/20/24	-	50FEQ 12 SINGLE ZONE ELECTRICAL HEAT PUMP	48TM009810	-

THIS DOCUMENT IS THE PROPERTY OF CARRIER CORPORATION AND IS DELIVERED UPON THE EXPRESS CONDITION THAT THE CONTENTS WILL NOT BE DISCLOSED OR USED WITHOUT CARRIER CORPORATION'S WRITTEN CONSENT.

SUBMISSION OF THESE DRAWINGS OR DOCUMENTS DOES NOT CONSTITUTE PART PERFORMANCE OR ACCEPTANCE OF CONTRACT.

Certified Drawing for ID 3,16

Project: Climatec - City of Esc - City Hall
Prepared By: Shawn Harlan

04/12/2025
04:29PM

Carrier
THIS DOCUMENT IS THE PROPERTY OF CARRIER CORPORATION AND IS DELIVERED UPON THE EXPRESS CONDITION THAT THE CONTENTS WILL NOT BE DISCLOSED OR USED WITHOUT CARRIER CORPORATION'S WRITTEN CONSENT.
SUBMISSION OF THESE DRAWINGS OR DOCUMENTS DOES NOT CONSTITUTE PART PERFORMANCE OR ACCEPTANCE OF CONTRACT.

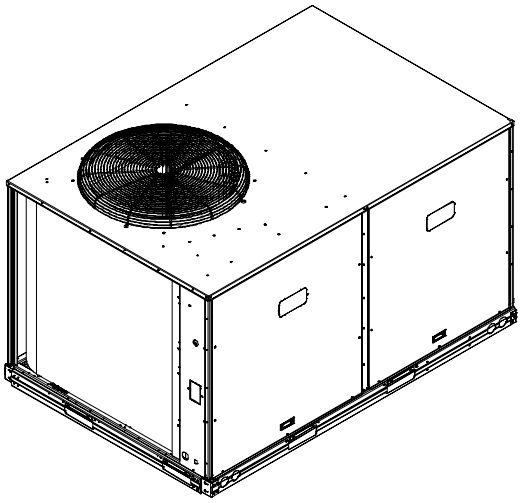

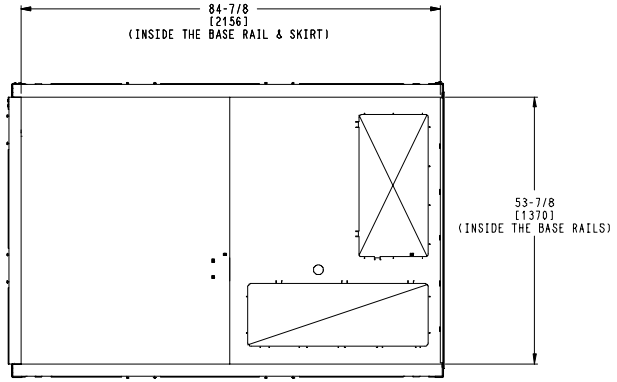

INSIDE BASERAIL DIMENSIONS
BOTTOM

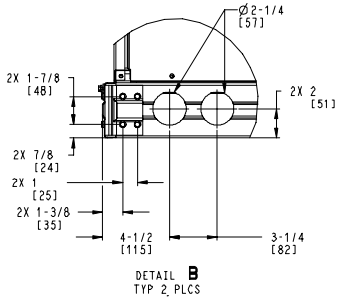

DETAIL **B**
TYP 2 PLCS

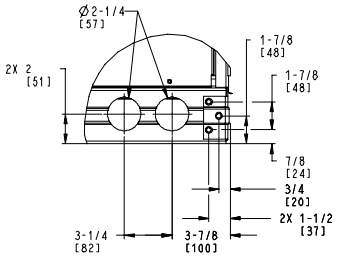

DETAIL **C**
TYP 2 PLCS

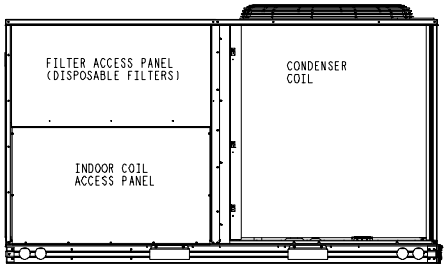

BACK

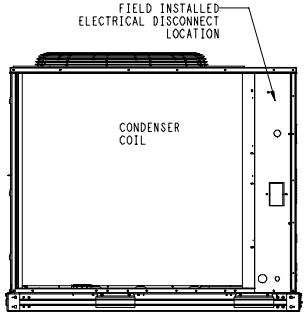

LEFT

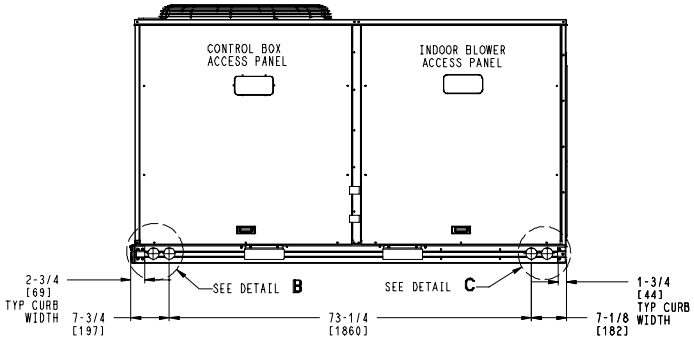

FRONT

ITC CLASSIFICATION	SHEET	DATE	SUPERCEDES			REV
U.S. ECCN:NSR	3 OF 3	02/20/24	-	50FEQ 12 SINGLE ZONE ELECTRICAL HEAT PUMP	48TM009810	-

Performance Summary For ID 3,16

Project: Climatec - City of Esc - City Hall 04/12/2025
Prepared By: Shawn Harlan 04:29PM

Part Number:50FEQM12A2M6-0A0A0

Refrigerant:	**R-454B**	
ARI EER:	**11.00**	
Application EER (Rooftop Unit only):	**11.07**	
IEER:	**15.0**	
Base Unit Dimensions		
Unit Length:	**88.1**	in
Unit Width:	**59.5**	in
Unit Height:	**49.4**	in
Operating Weight		
Base Unit Weight:	**955**	lb
Al/Cu - Al/Cu - Louvered Hail Guards:	**16**	lb
Accessories		
Winter Start Package:	**1**	lb
Total Operating Weight:	**972**	lb
Unit		
Unit Voltage-Phase-Hertz:	**460-3-60**	
Air Discharge:	**Horizontal**	
Fan Drive Type:	**Vane Axial**	
Actual Airflow:	**4000**	CFM
Site Altitude:	**0**	ft
Cooling Performance		
Condenser Entering Air DB:	**95.0**	F
Evaporator Entering Air DB:	**80.0**	F
Evaporator Entering Air WB:	**67.0**	F
Entering Air Enthalpy:	**31.44**	BTU/lb
Evaporator Leaving Air DB:	**57.6**	F
Evaporator Leaving Air WB:	**56.9**	F
Evaporator Leaving Air Enthalpy:	**24.35**	BTU/lb
Unit Discharge Air DB:	**58.8**	F
Unit Discharge Air WB:	**57.4**	F
Unit Discharge Air Enthalpy:	**24.62**	BTU/lb
Gross Cooling Capacity:	**127.67**	MBH
Net Cooling Capacity:	**122.65**	MBH
Gross Sensible Capacity:	**96.60**	MBH
Net Sensible Capacity:	**91.58**	MBH
Compressor Power Input:	**9.01**	kW
Coil Bypass Factor:	**0.041**	
Heating Performance		
Outdoor Ambient Temperature:	**47.0**	F
Entering Air Indoor Coil DB:	**70.0**	F
Leaving Air Indoor Coil DB:	**96.4**	F
Total Heating Capacity:	**113.90**	MBH
Integrated Heating Capacity:	**113.90**	MBH
Heating Power Input:	**9.40**	kW
High Temperature COP:	**3.40**	
Low Temperature COP:	**2.25**	
Supply Fan		
External Static Pressure:	**1.00**	in wg
Fan RPM:	**1716**	
Fan Power:	**1.72**	BHP
NOTE:	**Selected IFM RPM Range: 1100 - 2000**	

Selection includes construction throwaway filter into the base fan curve. This filter is not MERV Rated.

Performance Summary For ID 3,16

Project: Climatec - City of Esc - City Hall
Prepared By: Shawn Harlan

04/12/2025
04:29PM

Electrical Data

Voltage Range:	**414 - 506**
Compressor #1 RLA:	**8.3**
Compressor #1 LRA:	**58**
Compressor #2 RLA:	**8.3**
Compressor #2 LRA:	**58**
Indoor Fan Motor Type:	**MED**
Indoor Fan Motor FLA (Total):	**3**
Power Supply MCA:	**30**
Power Supply MOCP (Fuse or HACR):	**35**
Disconnect Size FLA:	**31**
Disconnect Size LRA:	**127**
Electrical Convenience Outlet:	**None**
Outdoor Fan [Qty / FLA (ea)]:	**1 / 7.4**

Control Panel SCCR: 5kA RMS at Rated Symmetrical Voltage

Acoustics

Sound Power Levels, db re 10E-12 Watts

	Discharge	Inlet	Outdoor
63 Hz	91.6	53.3	88.1
125 Hz	86.7	81.0	90.0
250 Hz	82.0	75.5	85.9
500 Hz	79.7	72.0	83.0
1000 Hz	80.8	71.1	81.6
2000 Hz	77.4	65.8	78.5
4000 Hz	71.7	56.3	76.4
8000 Hz	63.6	49.1	75.5
A-Weighted	84.7	75.3	87.0

Advanced Acoustics

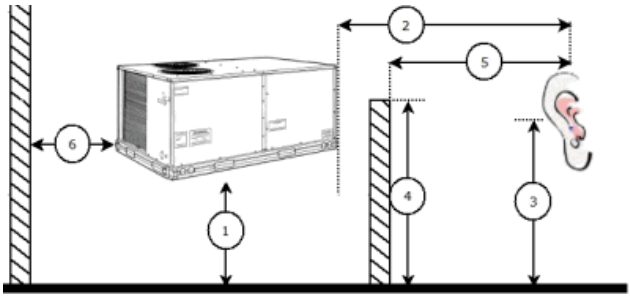

Advanced Accoustics Parameters

1. Unit height above ground:	**30.0**	ft
2. Horizontal distance from unit to receiver:	**50.0**	ft
3. Receiver height above ground:	**5.7**	ft
4. Height of obstruction:	**0.0**	ft
5. Horizontal distance from obstruction to receiver:	**0.0**	ft
6. Horizontal distance from unit to obstruction:	**0.0**	ft

Detailed Acoustics Information

Performance Summary For ID 3,16

Project: Climatec - City of Esc - City Hall
Prepared By: Shawn Harlan

04/12/2025
04:29PM

Octave Band Center Freq. Hz	63	125	250	500	1k	2k	4k	8k	Overall
A	88.1	90.0	85.9	83.0	81.6	78.5	76.4	75.5	94.0 Lw
B	61.9	73.9	77.3	79.8	81.6	79.7	77.4	74.4	87.0 LwA
C	55.7	57.6	53.5	50.6	49.2	46.1	44.0	43.1	61.6 Lp
D	29.5	41.5	44.9	47.4	49.2	47.3	45.0	42.0	54.6 LpA

Legend
A Sound Power Levels at Unit's Acoustic Center, Lw
B A-Weighted Sound Power Levels at Unit's Acoustic Center, LwA
C Sound Pressure Levels at Specific Distance from Unit, Lp
D A-Weighted Sound Pressure Levels at Specific Distance from Unit, LpA

Calculation methods used in this program are patterned after the ASHRAE Guide; other ASHRAE Publications and the AHRI Acoustical Standards. While a very significant effort has been made to insure the technical accuracy of this program, it is assumed that the user is knowledgeable in the art of system sound estimation and is aware of the tolerances involved in real world acoustical estimation. This program makes certain assumptions as to the dominant sound sources and sound paths which may not always be appropriate to the real system being estimated. Because of this, no assurances can be offered that this software will always generate an accurate sound prediction from user supplied input data. If in doubt about the estimation of expected sound levels in a space, an Acoustical Engineer or a person with sound prediction expertise should be consulted.

Fan Curve

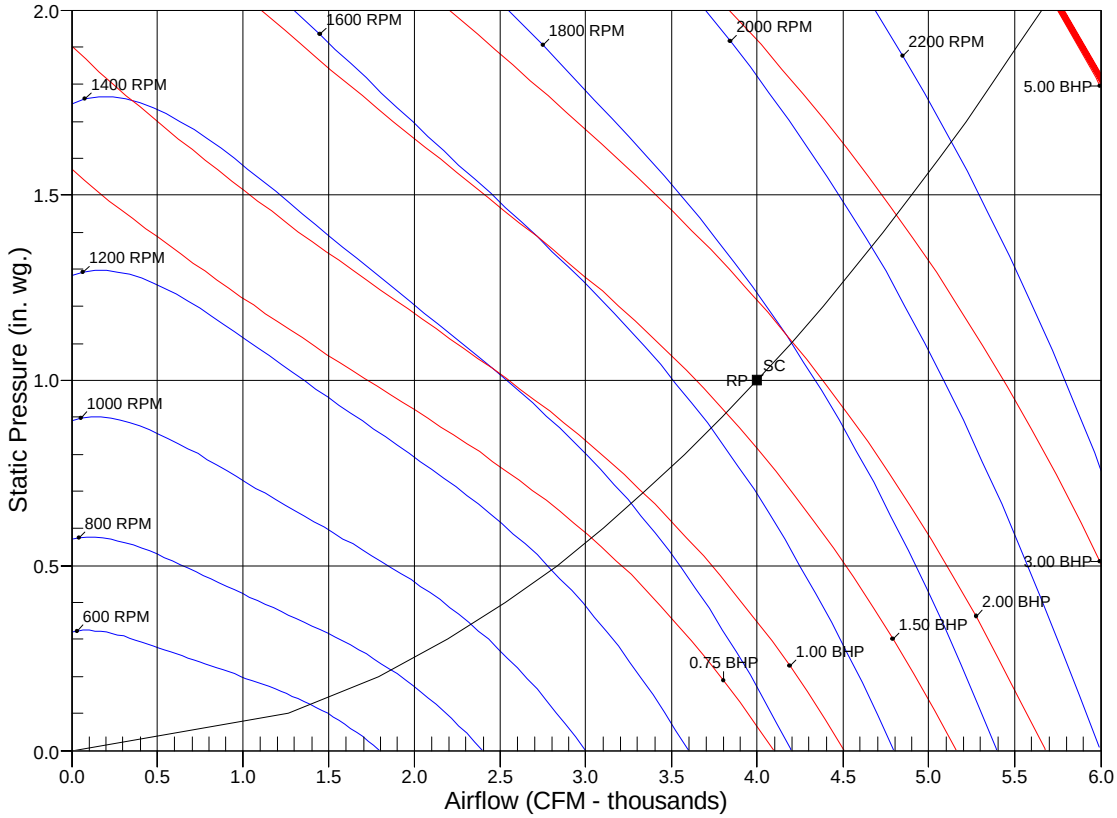

RPM = 1716 BHP = 1.72 Maximum RPM = 2200 Maximum BHP = 5.00
SC - System Curve RP - Rated Point

Cover Sheet

Submitted by: Shawn Harlan

Project Name: Climatec - City of Escondido City Hall Air Cooled Chiller

Tag Name: ID 10

Date: 4/12/2025

Unit Report

Submitted by: Shawn Harlan

Project Name: Climatec - City of Escondido City Hall Air Chiller

Tag Name: ID 10

Tag Name: ID 10
30RC Air Cooled Scroll Chiller

Unit Information

Model Number		30RC-04066-4---23
Unit Quantity		1
Condenser Type		Air Cooled
Compressor Type		Digital Scroll (Includes Sound Blankets)
Communication		CCN, BACnet IP & BACnet MS/TP
Manufacturing Source		Charlotte, USA
ASHRAE 90.1		2007, 2010, 2013/2016, 2019
Refrigerant Type		R-32
Independent Refrigerant Circuits		2
Rigging Weight	lb	2304
Operating Weight	lb	2384
Refrigerant Weight	lb	41
Unit Dimensions (L x W x H)	in	95 x 88 x 66
Baserail Dimensions (L x W)	in	95 x 88

Chiller Warranty Information (Note: for US and Canada only)

Warranty
First year - Parts only (standard)
Complete Unit Year 2 Parts & Labor

Unit Startups

Startup
Start-up & Complete Unit 1st Year Labor, 1st Unit

Extended Leadtime Options

No R-Quotes Specified

Ordering Information

Part Number	Description	Quantity
	Base Unit	1
	4.3" Control Panel Colored Display	
	BACnet IP & BACnet MS/TP	
	Energy Management Module	
	Evaporator Heater (Freeze Protection)	
	10 kA SCCR	
	Suction Line Insulation	
	Digital Scroll Compressor (Includes Sound Blankets)	
	Al/Cu Condenser Coil	
	Greenspeed Intelligence: High-Efficiency Variable Condenser Fans	
	Terminal Block	
	Brazed Plate Heat Exchanger (BPHE)	
	Single Point Power	
	Full Hail Guards	
	Low Sound - Includes Aero-Acoustic Fans	
30RC-04066-4---23	30RC Air Cooled Scroll Chiller	

Tag Name: ID 10
30RC Air Cooled Scroll Chiller

Non Contractual Picture

Unit Information

Model Number		30RC-04066-4---23
Unit Quantity		1
Condenser Type		Air Cooled
Compressor Type		Digital Scroll (Includes Sound Blankets)
Communication		CCN, BACnet IP & BACnet MS/TP
Manufacturing Source		Charlotte, USA
ASHRAE 90.1		2007, 2010, 2013/2016, 2019
Refrigerant Type		R-32
Independent Refrigerant Circuits		2
Rigging Weight	lb	2304
Operating Weight	lb	2384
Refrigerant Weight	lb	41
Unit Dimensions (L x W x H)	in	95 x 88 x 66
Baserail Dimensions (L x W)	in	95 x 88

Unit Features

- 4.3" Control Panel Colored Display
- BACnet IP & BACnet MS/TP
- Energy Management Module
- Evaporator Heater (Freeze Protection)
- 10 kA SCCR
- Suction Line Insulation
- Digital Scroll Compressor (Includes Sound Blankets)
- Al/Cu Condenser Coil
- Greenspeed Intelligence: High-Efficiency Variable Condenser Fans
- Terminal Block
- Brazed Plate Heat Exchanger (BPHE)
- Single Point Power
- Full Hail Guards
- Low Sound - Includes Aero-Acoustic Fans

Operating Conditions

Evaporator		Brazed Plate Heat Exchanger (BPHE)
Fluid Type		**Fresh Water**
Fluid Concentration	%	0
Fluid Volume	gal	7.20
Fouling Factor	(hr-sqft-F)/BTU	0.000100
Leaving Fluid Temperature	°F	44.00
Entering Fluid Temperature	°F	54.00
Fluid Flow	gpm	92.30
Min. Fluid Flow	gpm	49.93
Min. Part Load Fluid Flow	gpm	35.95
Pressure Drop	ft wg	3.34
Condenser		Al/Cu Condenser Coil
Entering Air Temperature	°F	95.0
Min. Outdoor Operating Temp	°F	-20.0
Number of Fans		3
Total Condenser Fan Airflow	CFM	33221
Altitude	ft	0

Performance Information

Cooling Capacity	Tons	38.58
Chiller Pressure Drop	ft wg	10
Total Compressor Power	kW	42.95
Total Fan Motor Power	kW	3.937
Total Unit Power (without pump)	kW	46.89
Minimum Capacity	%	9
Capacity Control Steps		44
Cooling Efficiency (EER)	BTU/(W-hr)	9.874
IPLV.IP	BTU/(W-hr)	16.14

Electrical Information

Unit Voltage		460-3-60
Electrical Connection		Single Point Power
SCCR		10 kA SCCR
Minimum Voltage	V	414
Maximum Voltage	V	506
Nominal Voltage	V	460
MCA	A	90.11
MOCP	A	110.0
ICF	A	209.7
RecFuse Size	A	100.0

Integrated Part Load Value (AHRI)					
IPLV.IP	BTU/(W-hr)	16.14			
Unit Performance					
Percent Full Load Capacity	%	100.0	75.0	50.0	25.0
Percent Full Load Power	%	100.0	53.1	28.5	12.3
Cooling Capacity	Tons	38.58	28.94	19.29	9.646
Unit Power Input	kW	46.89	24.91	13.38	5.789
Cooling Efficiency (EER)	BTU/(W-hr)	9.874	13.94	17.30	19.99
Evaporator Data					
Fluid Entering Temperature	°F	54.00	51.50	49.00	46.50
Fluid Leaving Temperature	°F	44.00	44.00	44.00	44.00
Fluid Flow Rate	gpm	92.30	92.30	92.30	92.30
Fouling Factor	(hr-sqft-F)/BTU	0.000100	0.000100	0.000100	0.000100
Pressure Drop	ft wg	10	9.2	8.46	7.81
Condenser Data					
Entering Air Temperature	°F	95.0	80.0	65.0	55.0

Values given are interpolated and are not directly measurable under laboratory conditions

Acoustic Report

Submitted by: Shawn Harlan

P Climatec - City of Escondido City Hall Air C **ne:** ller

Tag Name: ID 10

A-weighted Sound Power Levels

Octave Band Center Frequency	Hz	63	125	250	500	1000	2000	4000	8000	Total
Full Load	dBA	73.0	70.5	76.5	82.0	85.0	81.0	75.0	72.5	88.5
75% Load	dBA	71.5	65.5	71.5	76.0	77.5	76.0	74.0	67.0	83.0
50% Load	dBA	73.5	70.0	75.0	80.0	82.5	79.5	74.5	70.5	87.0
25% Load	dBA	75.5	62.0	67.5	77.0	77.5	77.0	73.5	67.0	83.5

A-weighted Sound Pressure Levels

Octave Band Center Frequency	Hz	63	125	250	500	1000	2000	4000	8000	Total
Full Load	dBA	45.0	42.5	48.5	54.0	57.0	53.0	47.0	44.5	60.5
75% Load	dBA	43.5	37.5	43.5	48.0	49.5	48.0	46.0	39.0	55.0
50% Load	dBA	45.5	42.0	47.0	52.0	54.5	51.5	46.5	42.5	58.5
25% Load	dBA	47.5	34.0	39.5	49.0	49.5	49.0	45.5	39.0	55.5

Acoustic Notes

1 - Height Above Ground: Chiller = 0.0 ft
2 - Horizontal Distance to Receiver: Chiller = 30.0 ft
3 - Vertical Height of Receiver: Chiller = 3.0 ft
Estimated Sound Power levels - dB re: 1 picowatt
Estimated Sound Pressure levels - dB re: 20 micropascal
Estimated sound levels given above are assumed to originate at the acoustic center of the unit.

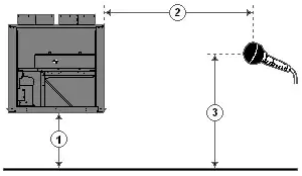

Estimated average sound pressure Lp at a given distance on a reflective surface in a free field environment.

NOTES:
1. DIMENSIONS SHOWN ARE IN INCHES, DIMENSIONS IN [ ] ARE IN MM.
2. DO NOT CAP OR OTHERWISE OBSTRUCT THE LIQUID LINE TEMPERATURE RELIEF.
3. 7/8 [22.2] DIAM. PILOT HOLE PROVIDED FOR LOCATION FIELD POWER WIRING ACTUAL HOLE REQUIRED DEPENDS ON FIELD WIRING SIZING.
4. ⌀ 0.5 [13] HOLE AND 0.8 [21] X 0.4 [11] SLOT USED FOR MOUNTING UNIT ON FRONT AND REAR BASE RAIL.
5. UNIT MUST HAVE SERVICE CLEARANCES AS FOLLOWS:
   TOP - DO NOT RESTRICT.
   COIL SIDE - 42 [1067] FROM SOLID SURFACE.
   PANEL SIDE - 48 [1219] PER NEC.
6. CARRIER DOES NOT RECOMEND INSTALLATION IN A PIT.
7. UNIT CAN BE HANDLED USING THE FORK TRUCK LIFT POCKETS (MINIMUM OF 60 [1524] FORK LENGTH).
8. WATER CONNECTIONS RECESSED 0 [0] INSIDE UNIT.
   ALL WATER DRAIN AND VENTING HOLES ARE 1/8" NPT.

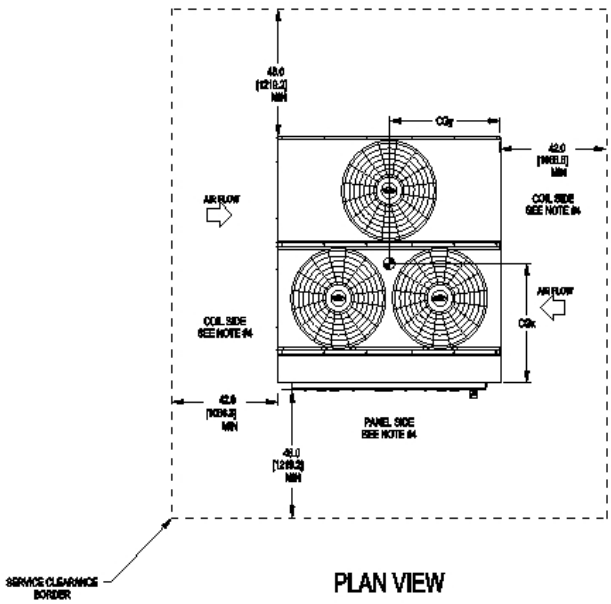

PLAN VIEW

CENTER OF GRAVITY INCH [MM]			ENTERING WATER (EW) INCH [MM]			LEAVING WATER (LW) INCH [MM]			MACHINE OPTIONS		
CGx	CGy	CGz	X ±.25	Y ±.25	Z ±.25	X ±.25	Y ±.25	Z ±.25	PUMP	[illegible]	COIL TYPE
35.6 [905]	47.0 [1190]	26.5 [672]	1.1 [28]	44.0 [1117]	31.7 [805]	1.1 [28]	44.0 [1117]	11.2 [284]	--	✓	CU-AL
CONNECTION TYPE: 2-1/2" GROOVED											

Carrier

JOB NAME:
job_name

BUYER:
buyer_name

SALES ENG.:
sales_eng

MODEL NO.:
model_number

JOB NO.:
job_number

P.O. NO.:
p.o._number

PREPARED BY:
prepared_by

ELECTRICAL CHARACTERISTICS:
elect_char.

JOBSITE LOCATION:
Job_Location 1
Job_Location 2

SALES OFFICE:
sales_office

REFRIGERANT NO.:
refrig_no

NOTES:
Notes_1
Notes_2

30RC 0447 STD
MACHINE ASSEMBLY
PLAN VIEW

DATE:4/12/2025

REVISION: _rev#

THIS DOCUMENT IS THE PROPERTY OF CARRIER CORP. AND IS DELIVERED UPON THE EXPRESS CONDITION THAT THE CONTENTS WILL NOT BE DISCLOSED OR USED WITHOUT CARRIER CORP. WRITTEN CONSENT.

SUBMISSION OF THESE ORDERS OR DOCUMENTS DOES NOT CONSTITUTE PART PERFORMANCE OR ACCEPTANCE OF CONTRACT.

CARRIER DWG # [illegible]
REV. - SHT 01 OF 01
DATE: [illegible]
SUPERSEDES DWG. DATED:
-

30RC

SHT 1 OF 4

NOTES:
1. DIMENSIONS SHOWN ARE IN INCHES, DIMENSIONS IN [ ] ARE IN MM.
2. DO NOT CAP OR OTHERWISE OBSTRUCT THE LIQUID LINE TEMPERATURE RELIEF.
3. 7/8 [22.2] DIAM. PILOT HOLE PROVIDED FOR LOCATION FIELD POWER WIRING ACTUAL HOLE REQUIRED DEPENDS ON FIELD WIRING SIZING.
4. ⌀ 0.5 [13] HOLE AND 0.8 [21] X 0.4 [11] SLOT USED FOR MOUNTING UNIT ON FRONT AND REAR BASE RAIL.
5. UNIT MUST HAVE SERVICE CLEARANCES AS FOLLOWS:
   TOP - DO NOT RESTRICT.
   COIL SIDE - 42 [1067] FROM SOLID SURFACE.
   PANEL SIDE - 48 [1219] PER NEC.
6. CARRIER DOES NOT RECOMEND INSTALLATION IN A PIT.
7. UNIT CAN BE HANDLED USING THE FORK TRUCK LIFT POCKETS (MINIMUM OF 60 [1524] FORK LENGTH).
8. WATER CONNECTIONS RECESSED 0 [0] INSIDE UNIT. ALL WATER DRAIN AND VENTING HOLES ARE 1/4" NPT.

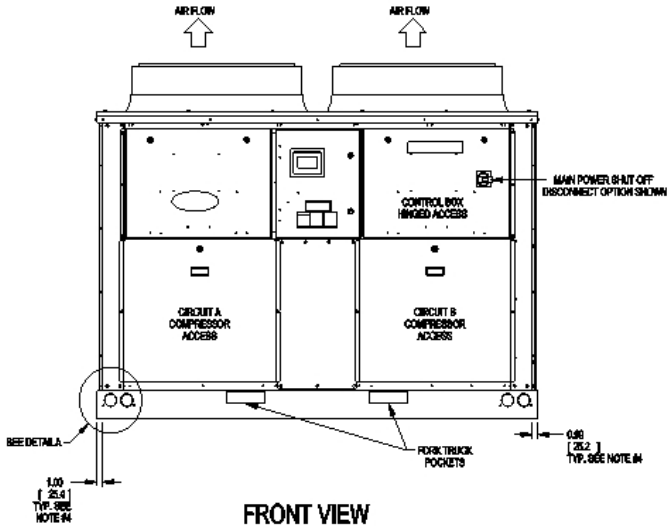

FRONT VIEW

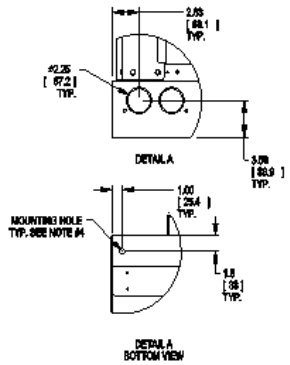

CENTER OF GRAVITY INCH [MM]			ENTERING WATER (EW) INCH [MM]			LEAVING WATER (LW) INCH [MM]			MACHINE OPTIONS		
CGx	CGy	CGz	X ± .25	Y ± .25	Z ± .25	X ± .25	Y ± .25	Z ± .25	PUMP	GREENSPEED	COIL TYPE
35.6 [905]	47.0 [1195]	26.5 [672]	1.1 [28]	44.0 [1117]	31.7 [806]	1.1 [28]	44.0 [1117]	11.2 [284]	-	✓	CU-AL
CONNECTION TYPE: 2-1/2" GROOVED											

Carrier

JOB NAME: job_name

BUYER: buyer_name

SALES ENG.: sales_eng

MODEL NO.: model_number

JOB NO.: job_number

P.O. NO.: p.o._number

PREPARED BY: prepared_by

ELECTRICAL CHARACTERISTICS: elect_char.

JOBSITE LOCATION: Job_Location 1 Job_Location 2

SALES OFFICE: sales_office

REFRIGERANT NO.: refrig_no

NOTES: Notes_1 Notes_2

30RC #401 STD MACHINE ASSEMBLY FRONT VIEW

DATE:4/12/2025

REVISION: _rev#

THIS DOCUMENT IS THE PROPERTY OF CARRIER CORP. AND IS DELIVERED UPON THE EXPRESS CONDITION THAT THE CONTENTS WILL NOT BE DISCLOSED OR USED WITHOUT CARRIER CORP. WRITTEN CONSENT.

SUBMISSION OF THESE INSERTS OR DOCUMENTS DOES NOT CONSTITUTE PART PERFORMANCE OR ACCEPTANCE OF CONTRACT.

CARRIER DWG # 30RC-401-STD-F

REV. - SHT 01 OF 01

DATE: 04/29/2025

SUPERSEDES DWG. DATED: -

30RC

SHT 2 OF 4

SUBMITTAL

Project

Climatec - City of Esc - Don E Anderson

Date

Saturday, April 12, 2025

Shawn Harlan
Sigler - Brea
205 Puente Street
Brea CA

Table Of Contents

Project: Climatec - City of Esc - Don E Anderson 04/12/2025
Prepared By: Shawn Harlan 05:47PM

ID 1,2 ..... **3**
Unit Report 4
Certified Drawing 5
Performance Summary 6

ID 1,2

Tag Cover Sheet
Unit Report
Certified Drawing
Performance Report

Unit Report For ID 1,2

Project: Climatec - City of Esc - Don E Anderson 04/12/2025
Prepared By: Shawn Harlan 05:47PM

Unit Parameters

Unit Model: **50NT-B48---3**
Unit Size: **48 (4 Tons)**
Volts-Phase-Hertz: **208-1-60**
Heating Type: **Heat Pump**
Refrigerant: **R-454B**
Duct Cfg: **Horizontal/Horizontal**

Dimensions (ft. in.) & Weight (lb.) ***

Unit Length: **4' 0.25"**
Unit Width: **3' 8.1875"**
Unit Height: **3' 8.75"**

*** Weights and Dimensions are approximate. Weight does not include roof curbs, unit packaging, field installed accessories or factory installed options. Approximate dimensions are provided primarily for shipping purposes. For exact dimensions and weights, refer to appropriate product data catalog.

Base Unit Weight (Does not include any accessories):
412 lb

Warranty Information

1 year warranty on parts
5 yearwarranty on compressor

No optional warranties were selected.

NOTE: Please see Warranty Catalog 500-089 for explanation of policies and ordering methods.

Ordering Information

Part Number	Description	Quantity
50NT-B48---3	Rooftop Unit	1

Certified Drawing for ID 1,2

Project: Climatec - City of Esc - Don E Anderson
Prepared By: Shawn Harlan

04/12/2025
05:47PM

CARRIER / BRYANT HP (LARGE CHASSIS)

COOLING CAPACITY	UNIT WT.		UNIT HEIGHT IN/MM		CENTER OF GRAVITY IN/MM					
	LB	KG	"A"		X		Y		Z	
36	409	184.2	54-3/4	1391	20-1/2	521	17-1/2	445	17-3/8	441
42	430	193.3	54-3/4	1391	20-1/2	521	17-1/2	445	17-3/8	448
48	412	193.3	44-3/4	1137	20-1/2	521	17-1/2	445	17-3/8	448
60	461	225.0	48-3/4	1238	20-1/2	521	17-1/2	445	18	457

UNIT	CORNER WEIGHT LB/KG							
	"1"		"2"		"3"		"4"	
36	89.2	40.5	79.0	35.8	79.0	51.5	113.4	57.8
42	93.8	42.6	83.2	37.7	83.2	54.2	119.4	60.6
48	89.6	40.6	79.8	36.2	79.8	51.7	114.0	58.4
60	99.9	45.3	88.8	40.3	88.8	58.1	128.1	65.5

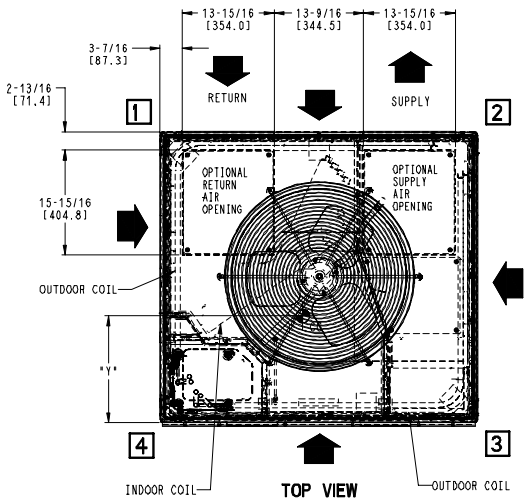

REQUIRED CLEARANCES TO COMBUSTIBLE MATL.

	INCHES [MM]
TOP OF UNIT	14 [355.6]
DUCT SIDE OF UNIT	2 [50.8]
SIDE OPPOSITE DUCTS	14 [355.6]
BOTTOM OF UNIT	0 [0.0]
ELECTRICAL PANEL	36 [914.4]

NEC. REQUIRED CLEARANCES.

	INCHES [MM]
BETWEEN UNITS, POWER ENTRY SIDE	42 [1066.8]
UNIT AND UNGROUNDED SURFACES, POWER ENTRY SIDE	36 [914.0]
UNIT AND BLOCK OR CONCRETE WALLS AND OTHER GROUNDED SURFACES, POWER ENTRY SIDE	42 [1066.8]

REQUIRED CLEARANCE FOR OPERATION AND SERVICING

	INCHES [MM]
EVAP. COIL ACCESS SIDE	36 [914.0]
POWER ENTRY SIDE (EXCEPT FOR NEC REQUIREMENTS)	42 [1066.8]
UNIT TOP	48 [1219.2]
SIDE OPPOSITE DUCTS	36 [914.0]
DUCT PANEL	12 [304.8]*

*MINIMUM DISTANCES: IF UNIT IS PLACED LESS THAN 12 [304.8] FROM WALL SYSTEM, THEN SYSTEM PERFORMANCE MAYBE COMPROMISED.

DIMENSIONS IN [] ARE IN MILLIMETERS

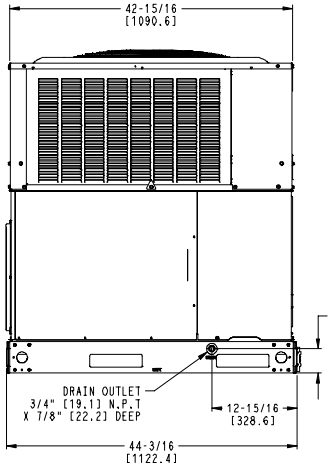

LEFT SIDE VIEW

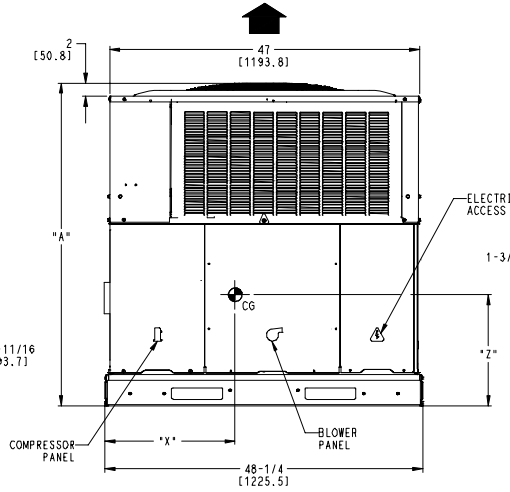

FRONT VIEW

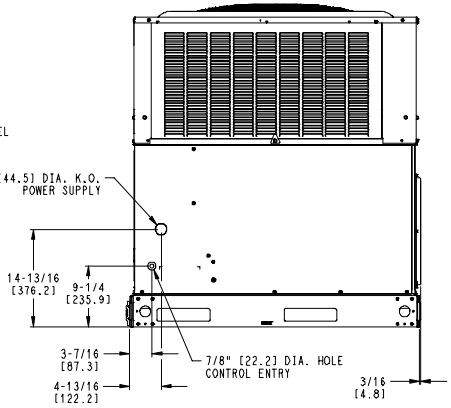

RIGHT SIDE VIEW

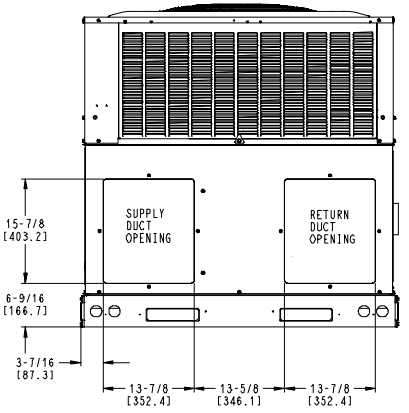

REAR VIEW

U.S. EXPORT CLASSIFICATION: NOT SUBJECT TO REGULATION (NLR)

12/20/23	ORIG. DRW	SINGLE ZONE ELECTRIC COOLING & HEAT(LG)	SD5986-4	-

Performance Summary For ID 1,2

Project: Climatec - City of Esc - Don E Anderson 04/12/2025
Prepared By: Shawn Harlan 05:47PM

Part Number:50NT-B48---3

Refrigerant:	**R-454B**	
ARI SEER2:	**13.40**	
Application EER (Rooftop Unit only):	**0.00**	

Base Unit Dimensions

Unit Length:	**48.3**	in
Unit Width:	**44.2**	in
Unit Height:	**44.8**	in
Base Unit Weight (Does not include any accessories):	**412**	lb

Unit

Unit Voltage-Phase-Hertz:	**208-1-60**	
Air Discharge:	**Horizontal**	
Fan Drive Type:	**Direct**	
Actual Airflow:	**1590**	CFM
Site Altitude:	**0**	ft

Cooling Performance

Condenser Entering Air DB:	**95.0**	F
Evaporator Entering Air DB:	**80.0**	F
Evaporator Entering Air WB:	**67.0**	F
Entering Air Enthalpy:	**31.44**	BTU/lb
Evaporator Leaving Air DB:	**59.0**	F
Evaporator Leaving Air WB:	**57.5**	F
Evaporator Leaving Air Enthalpy:	**24.73**	BTU/lb
Unit Discharge Air DB:	**0.0**	F
Unit Discharge Air WB:	**0.0**	F
Unit Discharge Air Enthalpy:	**0.00**	BTU/lb
Net Cooling Capacity:	**47.98**	MBH
Net Sensible Capacity:	**36.13**	MBH
Total Unit Power Input:	**4.10**	kW
Coil Bypass Factor:	**0.000**	

Heating Performance

Outdoor Ambient Temperature:	**47.0**	F
Entering Air Indoor Coil DB:	**70.0**	F
Leaving Air Indoor Coil DB:	**94.9**	F
Total Heating Capacity:	**42.84**	MBH
Integrated Heating Capacity:	**42.84**	MBH
Heating Power Input:	**3.51**	kW
High Temperature COP:	**3.70**	
Low Temperature COP:	**2.26**	
HSPF2:	**6.7**	

Supply Fan

External Static Pressure:	**0.50**	in wg
Options / Accessories Static Pressure		
Wet Coil:	**0.11**	in wg
Application External Static (ESP + Unit Opts/Acc.):	**0.61**	in wg
Fan Power:	**0.57**	BHP
Fan Motor Size, hp:	**1**	
NOTE:	**Medium Motor Speed, Horz**	

Selection includes construction throwaway filter into the base fan curve. This filter is not MERV Rated.

Electrical Data

Minimum Voltage:	**197**	
Maximum Voltage:	**253**	

Performance Summary For ID 1,2

Project: Climatec - City of Esc - Don E Anderson
Prepared By: Shawn Harlan

04/12/2025
05:47PM

Compressor RLA: **19.4**
Compressor LRA: **102**
Outdoor Fan FLA (ea): **1.2**
Indoor Fan Motor FLA (Total): **6.9**
Power Supply MCA: **32.4**
Power Supply MOCP (Fuse or HACR): **50**

Control Panel SCCR: 5kA RMS at Rated Symmetrical Voltage

Acoustics

Sound Rating: **74.0** db
Sound Power Levels, db re 10E-12 Watts

	Discharge	Inlet	Outdoor
63 Hz	NA	NA	NA
125 Hz	NA	NA	56.9
250 Hz	NA	NA	59.3
500 Hz	NA	NA	63.9
1000 Hz	NA	NA	64.5
2000 Hz	NA	NA	61.7
4000 Hz	NA	NA	55.4
8000 Hz	NA	NA	47.4

Advanced Acoustics

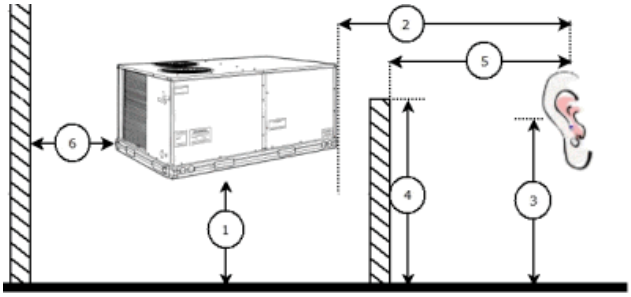

Advanced Accoustics Parameters

1. Unit height above ground: **30.0** ft
2. Horizontal distance from unit to receiver: **50.0** ft
3. Receiver height above ground: **5.7** ft
4. Height of obstruction: **0.0** ft
5. Horizontal distance from obstruction to receiver: **0.0** ft
6. Horizontal distance from unit to obstruction: **0.0** ft

Detailed Acoustics Information

Octave Band Center Freq. Hz	63	125	250	500	1k	2k	4k	8k	Overall
A	0.0	56.9	59.3	63.9	64.5	61.7	55.4	47.4	69.3 Lw
B	-26.2	40.8	50.7	60.7	64.5	62.9	56.4	46.3	68.2 LwA
C	0.0	24.5	26.9	31.5	32.1	29.3	23.0	15.0	36.9 Lp
D	-26.2	8.4	18.3	28.3	32.1	30.5	24.0	13.9	35.8 LpA

Legend

Performance Summary For ID 1,2

Project: Climatec - City of Esc - Don E Anderson 04/12/2025
Prepared By: Shawn Harlan 05:47PM

A Sound Power Levels at Unit's Acoustic Center, Lw
B A-Weighted Sound Power Levels at Unit's Acoustic Center, LwA
C Sound Pressure Levels at Specific Distance from Unit, Lp
D A-Weighted Sound Pressure Levels at Specific Distance from Unit, LpA

Calculation methods used in this program are patterned after the ASHRAE Guide; other ASHRAE Publications and the AHRI Acoustical Standards. While a very significant effort has been made to insure the technical accuracy of this program, it is assumed that the user is knowledgeable in the art of system sound estimation and is aware of the tolerances involved in real world acoustical estimation. This program makes certain assumptions as to the dominant sound sources and sound paths which may not always be appropriate to the real system being estimated. Because of this, no assurances can be offered that this software will always generate an accurate sound prediction from user supplied input data. If in doubt about the estimation of expected sound levels in a space, an Acoustical Engineer or a person with sound prediction expertise should be consulted.

SUBMITTAL

Project

Climatec - City of Esc - EVCC

Date

Saturday, April 12, 2025

Shawn Harlan
Sigler - Brea
205 Puente Street
Brea CA

Table Of Contents

Project: Climatec - City of Esc - EVCC
Prepared By: Shawn Harlan

04/12/2025
05:52PM

ID 6,7,11-13,20 ..... **3**
Unit Report 4
Certified Drawing 5
Performance Summary 8

ID 6,7,11-13,20

Tag Cover Sheet
Unit Report
Certified Drawing
Performance Report

Unit Report For ID 6,7,11-13,20

Project: Climatec - City of Esc - EVCC
Prepared By: Shawn Harlan

04/12/2025
05:52PM

Unit Parameters

Unit Model: **50GEQM06A2M5-0A0A0**
Unit Size: **06 (5 Tons)**
Volts-Phase-Hertz: **208-3-60**
Heating Type: **Heat Pump**
Refrigerant: **R-454B**
Heat Control: **Two Stage Cooling, Single Circuit**
Duct Cfg: **Vertical Supply / Vertical Return**

Dimensions (ft. in.) & Weight (lb.) ***

Unit Length: **6' 2.375"**
Unit Width: **3' 10.625"**
Unit Height: **3' 5.375"**
Total Operating Weight: **613** lb

*** Weights and Dimensions are approximate. Weight does not include unit packaging. Approximate dimensions are provided primarily for shipping purposes. For exact dimensions and weights, refer to appropriate product data catalog.

Lines and Filters

Return Air Filter Type: **Throwaway**
Return Air Filter Quantity: **4**
Return Air Filter Size: **16 x 16 x 2**

Selection includes construction throwaway filter into the base fan curve.

Unit Configuration

Standard/Medium Static - EcoBlue Vane Axial Fan
Al/Cu - Al/Cu - Louvered Hail Guards
Standard Electromechanical Controls (can be used with field installed economizers and dampers)
Standard

Warranty Information

5-Year compressor parts (STD.)
1-Year parts (STD.)

No optional warranties were selected.

NOTE: Please see Warranty Catalog 500-089 for explanation of policies and ordering methods.

Ordering Information

Part Number	Description	Quantity
50GEQM06A2M5-0A0A0	Rooftop Unit	1

Certified Drawing for ID 6,7,11-13,20

Project: Climatec - City of Esc - EVCC
Prepared By: Shawn Harlan

04/12/2025
05:52PM

NOTES:

1. DIMENSIONS ARE IN INCHES, DIMENSIONS IN [ ] ARE IN MILLIMETERS.
2. CENTER OF GRAVITY
3. DIRECTION OF AIR FLOW
4. ALL VIEW DRAWN USING 3RD ANGLE

Carrier
THIS DOCUMENT IS THE PROPERTY OF CARRIER CORPORATION AND IS DELIVERED UPON THE EXPRESS CONDITION THAT THE CONTENTS WILL NOT BE DISCLOSED OR USED WITHOUT CARRIER CORPORATION'S WRITTEN CONSENT.
SUBMISSION OF THESE DRAWINGS OR DOCUMENTS DOES NOT CONSTITUTE PART PERFORMANCE OR ACCEPTANCE OF CONTRACT.

UNIT	J	K
50GEQ*04	33 3/8 [847]	18 5/8 [472]
50GEQ*05	41 3/8 [1051]	14 7/8 [378]
50GEQ*06	41 3/8 [1051]	14 7/8 [378]

	CONNECTION SIZES
A	1 3/8" [35] DIA FIELD POWER SUPPLY HOLE
B	2" [51] DIA POWER SUPPLY KNOCKOUT
C	1 3/4" [44] DIA GAUGE ACCESS PLUG
D	7/8" [22] DIA FIELD CONTROL WIRING HOLE
E	3/4"-14 NPT CONDENSATE DRAIN
G	2 1/2 " [64] DIA POWER SUPPLY KNOCK-OUT

THRU-THE-BASE CHART
THESE HOLES REQUIRED FOR USE CRBTMPWR008A00, 009A00

	THREADED CONDUIT SIZE	WIRE USE	REQ'D HOLE SIZES (MAX.)
W	1/2"	115V	7/8" [22.2]
X	1/2"	24V	7/8" [22.2]
Y *	3/4"	POWER	1 1/8" [28.6]
Z**	(009A00) 1/2" FPT	GAS	1 1/8" [28.6]
	FOR "THRU-THE-BASEPAN" FACTORY OPTION, FITTINGS FOR ONLY X,Y, & Z ARE PROVIDED		
*	SELECT EITHER 3/4" OR 1/2" FOR POWER, DEPENDING ON WIRE SIZE		
**	(008A00) PROVIDES 3/4" FPT THRU CURB FLANGE & FITTING.		

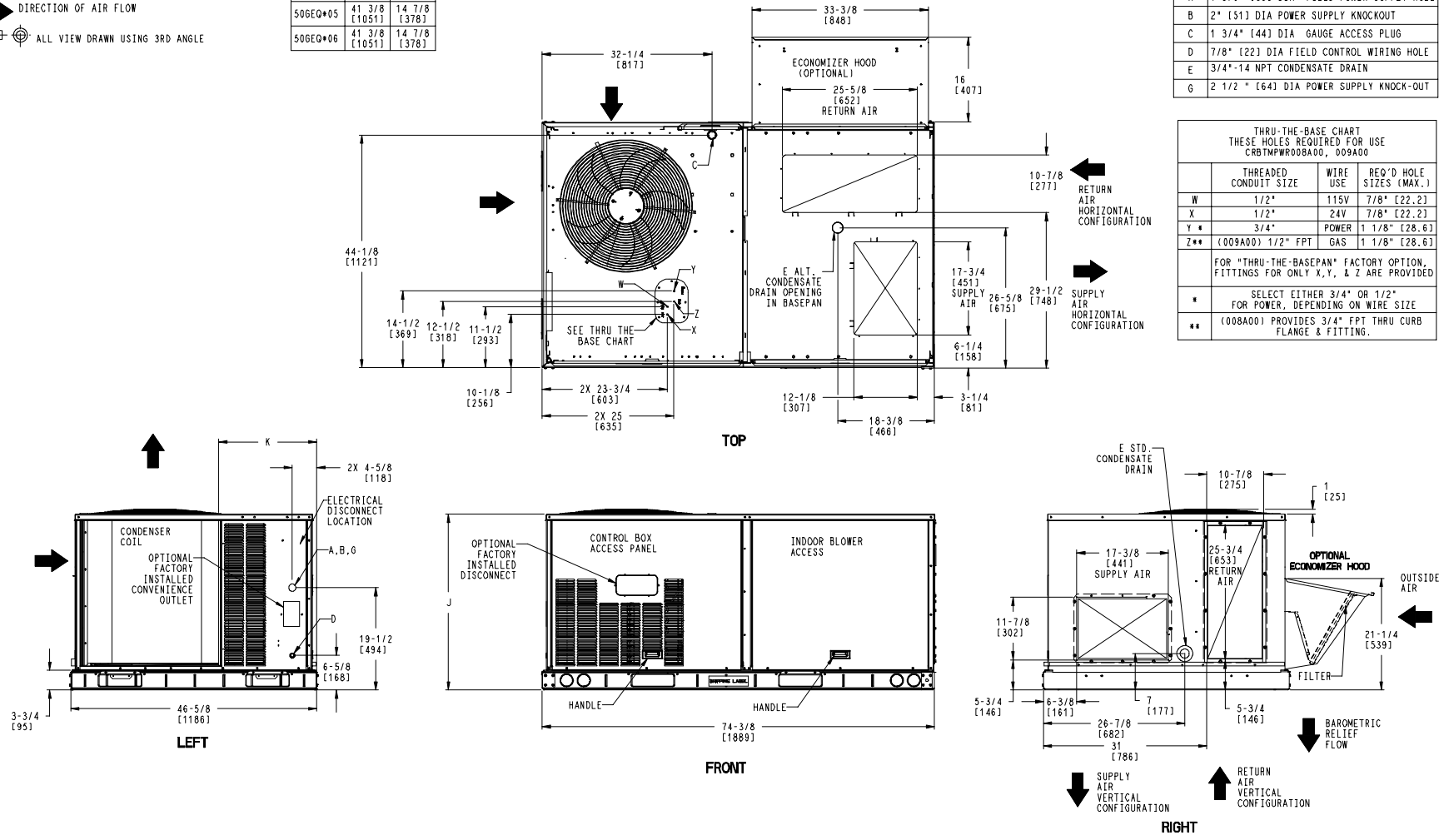

ITC CLASSIFICATION	SHEET	DATE	SUPERCEDES	50GEQ 04-06 SINGLE PACKAGE HEAT PUMP		REV
U.S. ECCN:NSR	1 OF 3	9/9/24	9/15/23		48TC006647	A

Certified Drawing for ID 6,7,11-13,20

Project: Climatec - City of Esc - EVCC
Prepared By: Shawn Harlan

04/12/2025
05:52PM

UNIT	STD. UNIT WEIGHT *		CORNER WEIGHT (A)		CORNER WEIGHT (B)		CORNER WEIGHT (C)		CORNER WEIGHT (D)		C.G.		HEIGHT
	LBS.	KG.	LBS.	KG.	LBS.	KG.	LBS.	KG.	LBS.	KG.	X	Y	Z
50GEQ*04	475	215	128	58	120	54	110	50	117	53	36 [914]	22 3/8 [568]	16 1/8 [410]
50GEQ*05	594	269	163	74	148	67	135	61	149	68	35 3/8 [898]	22 5/16 [557]	16 1/2 [419]
50GEQ*06	596	270	163	74	148	67	135	61	149	68	35 3/8 [898]	22 5/16 [557]	16 1/2 [419]

*- STANDARD UNIT WEIGHT IS WITHOUT ELECTRIC HEAT AND WITHOUT PACKAGING.
FOR OTHER OPTIONS AND ACCESSORIES REFER TO THE PRODUCT DATA CATALOG.

Carrier
THIS DOCUMENT IS THE PROPERTY OF CARRIER CORPORATION AND IS DELIVERED UPON THE EXPRESS CONDITION THAT THE CONTENTS WILL NOT BE DISCLOSED OR USED WITHOUT CARRIER CORPORATION'S WRITTEN CONSENT.
SUBMISSION OF THESE DRAWINGS OR DOCUMENTS DOES NOT CONSTITUTE PART PERFORMANCE OR ACCEPTANCE OF CONTRACT.

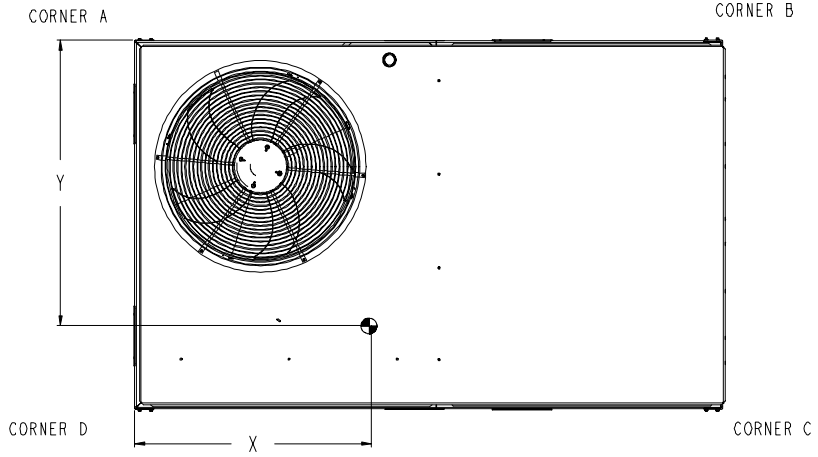

TOP

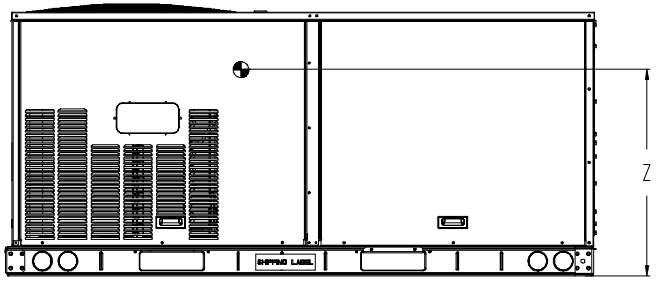

FRONT

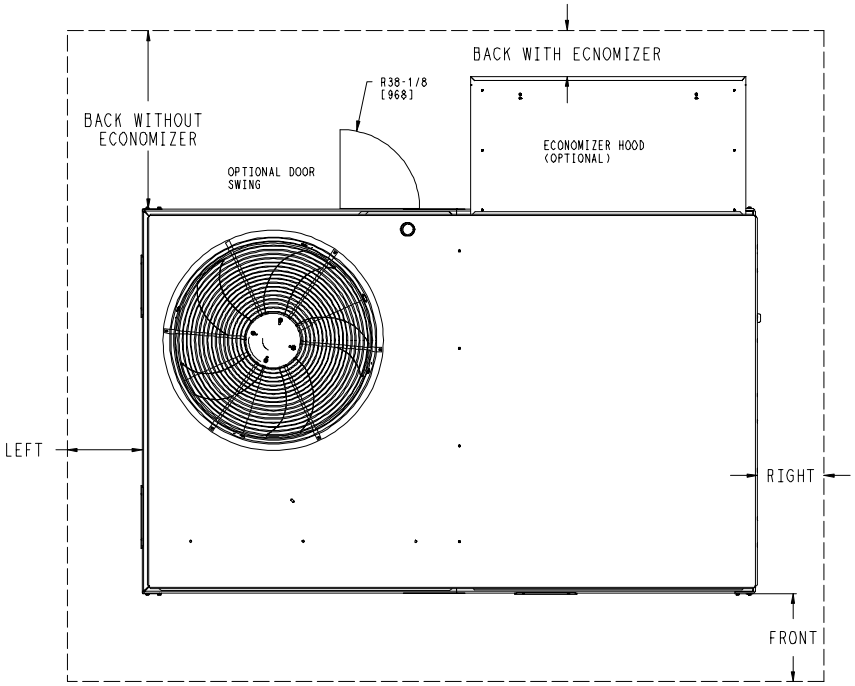

NOTE:

1. FOR ALL MINIMUM CLEARANCES LOCAL CODES OR JURISDICTIONS MAY PREVAIL.

	CLEARANCE		
	SERVICE WITH:	SERVICE WITH:	OPERATING
SURFACE	CONDUCTIVE BARRIER	NONCONDUCTIVE BARRIER	CLEARANCE
FRONT	48 [1219mm]	36 [914mm]	18 [457mm]
LEFT	48 [1219mm]	42 [1067mm]	18 [457mm]
BACK W/O ECON	48 [1219mm]	42 [1067mm]	18 [457mm]
BACK W/ECON	36 [914mm]	36 [914mm]	18 [457mm]
RIGHT	36 [914mm]	36 [914mm]	18 [457mm]
TOP	72 [1829mm]	72 [1829mm]	72 [1829mm]

ITC CLASSIFICATION	SHEET	DATE	SUPERCEDES			REV
U.S. ECCN:NSR	2 OF 3	9/9/24	9/15/23	50GEQ 04-06 SINGLE PACKAGE HEAT PUMP	48TC006647	A

Certified Drawing for ID 6,7,11-13,20

Project: Climatec - City of Esc - EVCC
Prepared By: Shawn Harlan

04/12/2025
05:52PM

Carrier | THIS DOCUMENT IS THE PROPERTY OF CARRIER CORPORATION AND IS DELIVERED UPON THE EXPRESS CONDITION THAT THE CONTENTS WILL NOT BE DISCLOSED OR USED WITHOUT CARRIER CORPORATION'S WRITTEN CONSENT. | SUBMISSION OF THESE DRAWINGS OR DOCUMENTS DOES NOT CONSTITUTE PART PERFORMANCE OR ACCEPTANCE OF CONTRACT.

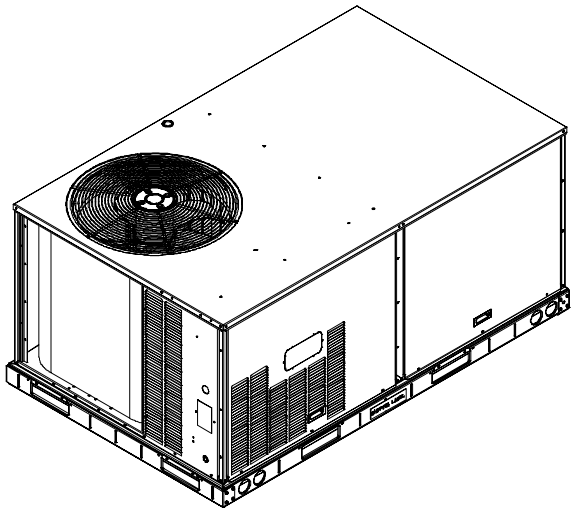

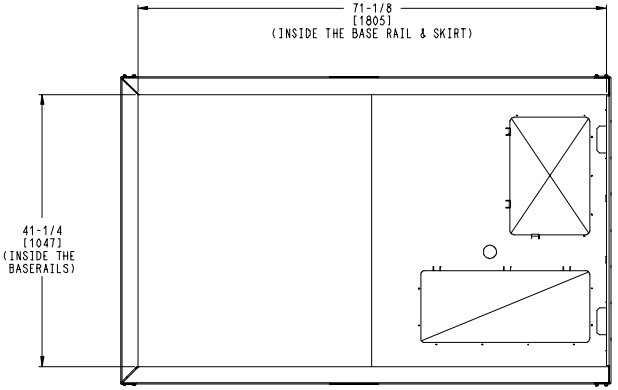

INSIDE BASERAIL DIMENSIONS
BOTTOM

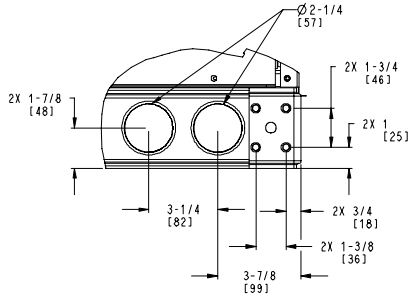

DETAIL **C**
TYP 4 PLCS

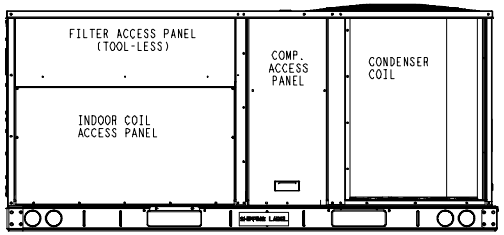

BACK

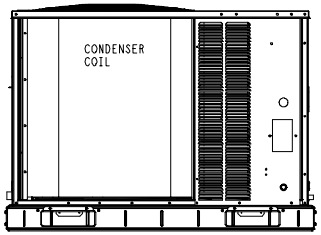

LEFT

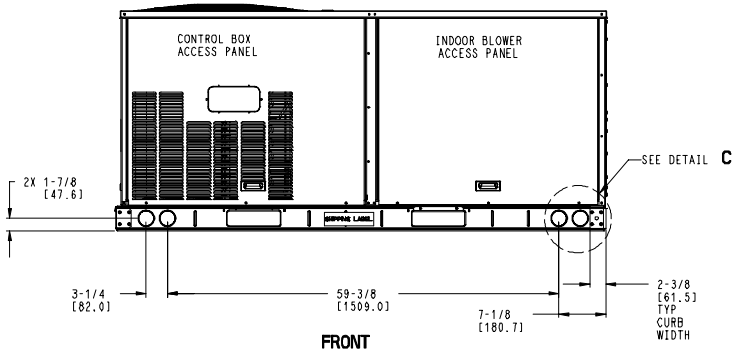

FRONT

ITC CLASSIFICATION	SHEET	DATE	SUPERCEDES			REV
U.S. ECCN:NSR	3 OF 3	9/9/24	9/15/23	50GEQ 04-06 SINGLE PACKAGE HEAT PUMP	48TC006647	A

Performance Summary For ID 6,7,11-13,20

Project: Climatec - City of Esc - EVCC
Prepared By: Shawn Harlan

04/12/2025
05:52PM

Part Number:50GEQM06A2M5-0A0A0

Refrigerant:	**R-454B**	
ARI SEER:	**17.00**	
ARI SEER2:	**16.00**	
Application EER (Rooftop Unit only):	**11.77**	

Base Unit Dimensions

Unit Length:	**74.4**	in
Unit Width:	**46.6**	in
Unit Height:	**41.4**	in

Operating Weight

Base Unit Weight:	**596**	lb
Al/Cu - Al/Cu - Louvered Hail Guards:	**17**	lb
Total Operating Weight:	**613**	lb

Unit

Unit Voltage-Phase-Hertz:	**208-3-60**	
Air Discharge:	**Vertical**	
Fan Drive Type:	**Direct Drive**	
Actual Airflow:	**2000**	CFM
Site Altitude:	**0**	ft

Cooling Performance

Condenser Entering Air DB:	**95.0**	F
Evaporator Entering Air DB:	**80.0**	F
Evaporator Entering Air WB:	**67.0**	F
Entering Air Enthalpy:	**31.44**	BTU/lb
Evaporator Leaving Air DB:	**57.3**	F
Evaporator Leaving Air WB:	**57.1**	F
Evaporator Leaving Air Enthalpy:	**24.49**	BTU/lb
Unit Discharge Air DB:	**58.5**	F
Unit Discharge Air WB:	**57.6**	F
Unit Discharge Air Enthalpy:	**24.78**	BTU/lb
Gross Cooling Capacity:	**62.53**	MBH
Net Cooling Capacity:	**59.91**	MBH
Gross Sensible Capacity:	**49.01**	MBH
Net Sensible Capacity:	**46.39**	MBH
Compressor Power Input:	**4.02**	kW
Coil Bypass Factor:	**0.014**	

Heating Performance

Outdoor Ambient Temperature:	**47.0**	F
Entering Air Indoor Coil DB:	**70.0**	F
Leaving Air Indoor Coil DB:	**95.2**	F
Total Heating Capacity:	**54.50**	MBH
Integrated Heating Capacity:	**54.50**	MBH
Heating Power Input:	**4.20**	kW
High Temperature COP:	**3.80**	
Low Temperature COP:	**2.50**	
HSPF:	**7.2**	
High Temperature COP2:	**3.80**	
Low Temperature COP2:	**2.50**	
HSPF2:	**7.2**	

Supply Fan

External Static Pressure:	**1.00**	in wg
Fan RPM:	**2036**	
Fan Power:	**0.90**	BHP

Performance Summary For ID 6,7,11-13,20

Project: Climatec - City of Esc - EVCC
Prepared By: Shawn Harlan

04/12/2025
05:52PM

NOTE: **Selected IFM RPM Range: 1228 - 2390**

Selection includes construction throwaway filter into the base fan curve. This filter is not MERV Rated.

Electrical Data

Voltage Range:	**187 - 253**
Compressor #1 RLA:	**15.4**
Compressor #1 LRA:	**150**
Indoor Fan Motor Type:	**MED**
Indoor Fan Motor FLA (Total):	**9.2**
Power Supply MCA:	**30**
Power Supply MOCP (Fuse or HACR):	**45**
Disconnect Size FLA:	**30**
Disconnect Size LRA:	**166**
Electrical Convenience Outlet:	**None**
Outdoor Fan [Qty / FLA (ea)]:	**1 / 1.3**

Control Panel SCCR: 5kA RMS at Rated Symmetrical Voltage

Acoustics

Sound Power Levels, db re 10E-12 Watts

	Discharge	Inlet	Outdoor
63 Hz	92.3	90.8	85.6
125 Hz	83.5	79.7	84.7
250 Hz	77.6	72.4	80.5
500 Hz	73.9	66.4	76.0
1000 Hz	70.7	68.5	72.4
2000 Hz	67.7	59.3	68.0
4000 Hz	64.3	53.1	62.8
8000 Hz	60.4	46.8	59.3
A-Weighted	77.2	72.6	79.0

Advanced Acoustics

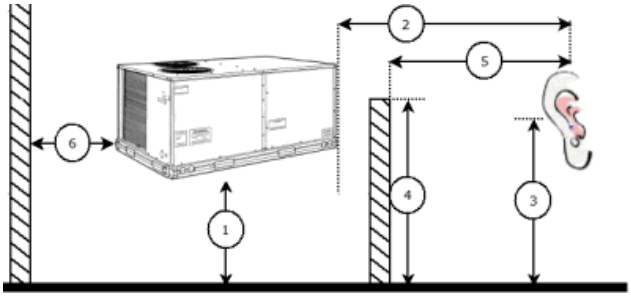

Advanced Accoustics Parameters

1. Unit height above ground:	**30.0**	ft
2. Horizontal distance from unit to receiver:	**50.0**	ft
3. Receiver height above ground:	**5.7**	ft
4. Height of obstruction:	**0.0**	ft
5. Horizontal distance from obstruction to receiver:	**0.0**	ft
6. Horizontal distance from unit to obstruction:	**0.0**	ft

Detailed Acoustics Information

Performance Summary For ID 6,7,11-13,20

Project: Climatec - City of Esc - EVCC
Prepared By: Shawn Harlan

04/12/2025
05:52PM

Octave Band Center Freq. Hz	63	125	250	500	1k	2k	4k	8k	Overall
A	85.6	84.7	80.5	76.0	72.4	68.0	62.8	59.3	89.2 Lw
B	59.4	68.6	71.9	72.8	72.4	69.2	63.8	58.2	78.5 LwA
C	53.2	52.3	48.1	43.6	40.0	35.6	30.4	26.9	56.8 Lp
D	27.0	36.2	39.5	40.4	40.0	36.8	31.4	25.8	46.1 LpA

Legend
A Sound Power Levels at Unit's Acoustic Center, Lw
B A-Weighted Sound Power Levels at Unit's Acoustic Center, LwA
C Sound Pressure Levels at Specific Distance from Unit, Lp
D A-Weighted Sound Pressure Levels at Specific Distance from Unit, LpA

Calculation methods used in this program are patterned after the ASHRAE Guide; other ASHRAE Publications and the AHRI Acoustical Standards. While a very significant effort has been made to insure the technical accuracy of this program, it is assumed that the user is knowledgeable in the art of system sound estimation and is aware of the tolerances involved in real world acoustical estimation. This program makes certain assumptions as to the dominant sound sources and sound paths which may not always be appropriate to the real system being estimated. Because of this, no assurances can be offered that this software will always generate an accurate sound prediction from user supplied input data. If in doubt about the estimation of expected sound levels in a space, an Acoustical Engineer or a person with sound prediction expertise should be consulted.

Fan Curve

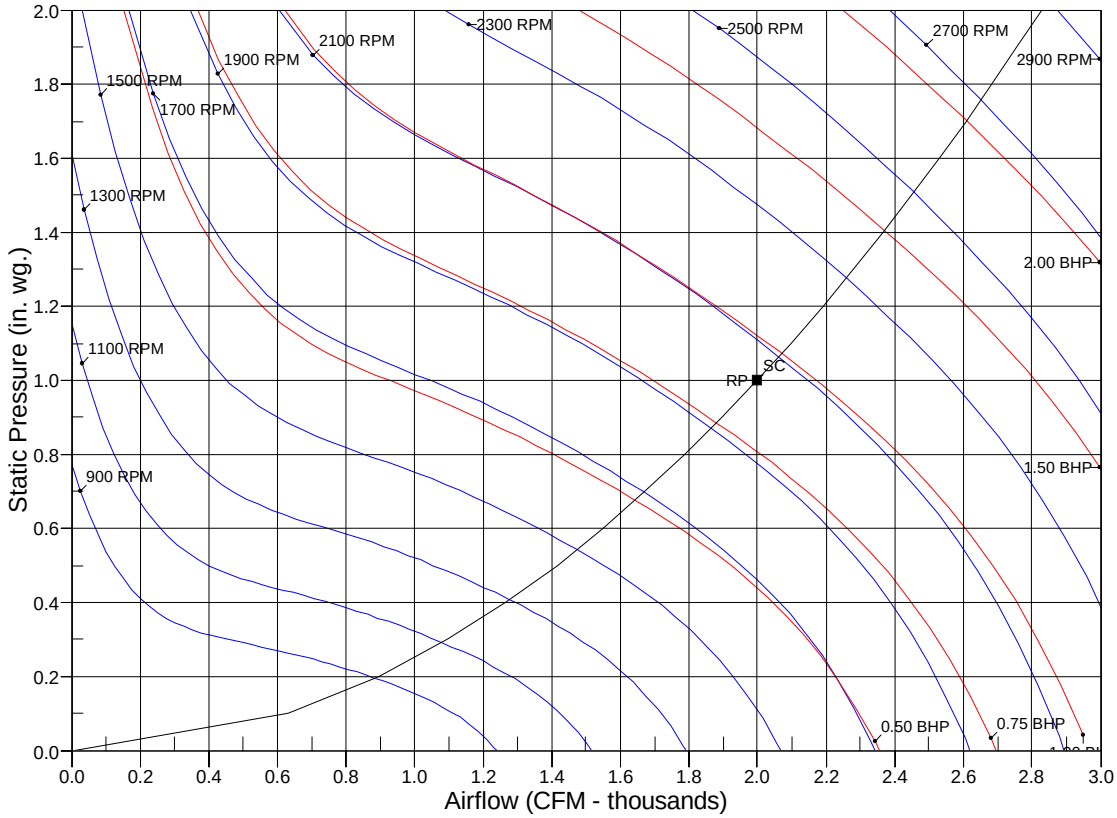

RPM = 2036 BHP = 0.90 Maximum RPM = 2836 Maximum BHP = 3.00
SC - System Curve RP - Rated Point

SUBMITTAL

Project

Climatec - City of Esc - Fire Station 1

Date

Saturday, April 12, 2025

Shawn Harlan
Sigler - Brea
205 Puente Street
Brea CA

Table Of Contents

Project: Climatec - City of Esc - Fire Station 1 04/12/2025
Prepared By: Shawn Harlan 07:47AM

ID 1 **3**
Unit Report 4
Certified Drawing 5
Performance Summary 8
ID 2 **11**
Unit Report 12
Certified Drawing 13
Performance Summary 16
ID 3 **19**
Unit Report 20
Certified Drawing 21
Performance Summary 24
ID 4 **27**
Unit Report 28
Certified Drawing 29
Performance Summary 30
ID 5 **34**
Unit Report 35
Certified Drawing 36
Performance Summary 39
ID 6 **42**
Unit Report 43
Certified Drawing 44
Performance Summary 47
ID 8 **50**
Unit Report 51
Certified Drawing 52
Performance Summary 55
ID 9 **59**
Unit Report 60
Certified Drawing 61
Performance Summary 64

ID 1

Tag Cover Sheet
Unit Report
Certified Drawing
Performance Report

Unit Report For ID 1

Project: Climatec - City of Esc - Fire Station 1 04/12/2025
Prepared By: Shawn Harlan 07:47AM

Unit Parameters

Unit Model: **50GEQM04A2M5-0A0A0**
Unit Size: **04 (3 Tons)**
Volts-Phase-Hertz: **208-3-60**
Heating Type: **Heat Pump**
Refrigerant: **R-454B**
Heat Control: **Two Stage Cooling, Single Circuit**
Duct Cfg: **Horizontal Supply / Horizontal Return**

Dimensions (ft. in.) & Weight (lb.) ***

Unit Length: **6' 2.375"**
Unit Width: **3' 10.625"**
Unit Height: **3' 5.375"**
Total Operating Weight: **580** lb

*** Weights and Dimensions are approximate. Weight does not include unit packaging. Approximate dimensions are provided primarily for shipping purposes. For exact dimensions and weights, refer to appropriate product data catalog.

Lines and Filters

Return Air Filter Type: **Throwaway**
Return Air Filter Quantity: **2**
Return Air Filter Size: **16 x 25 x 2**

Selection includes construction throwaway filter into the base fan curve.

Unit Configuration

Standard/Medium Static - EcoBlue Vane Axial Fan
Al/Cu - Al/Cu - Louvered Hail Guards
Standard Electromechanical Controls (can be used with field installed economizers and dampers)
Standard

Warranty Information

5-Year compressor parts (STD.)
1-Year parts (STD.)

No optional warranties were selected.

NOTE: Please see Warranty Catalog 500-089 for explanation of policies and ordering methods.

Ordering Information

Part Number	Description	Quantity
50GEQM04A2M5-0A0A0	Rooftop Unit	1

Certified Drawing for ID 1

Project: Climatec - City of Esc - Fire Station 1
Prepared By: Shawn Harlan

04/12/2025
07:47AM

NOTES:

1. DIMENSIONS ARE IN INCHES, DIMENSIONS IN [ ] ARE IN MILLIMETERS.
2. CENTER OF GRAVITY
3. DIRECTION OF AIR FLOW
4. ALL VIEW DRAWN USING 3RD ANGLE

UNIT	J	K
50GEQ*04	33 3/8 [847]	18 5/8 [472]
50GEQ*05	41 3/8 [1051]	14 7/8 [378]
50GEQ*06	41 3/8 [1051]	14 7/8 [378]

Carrier
THIS DOCUMENT IS THE PROPERTY OF CARRIER CORPORATION AND IS DELIVERED UPON THE EXPRESS CONDITION THAT THE CONTENTS WILL NOT BE DISCLOSED OR USED WITHOUT CARRIER CORPORATION'S WRITTEN CONSENT.
SUBMISSION OF THESE DRAWINGS OR DOCUMENTS DOES NOT CONSTITUTE PART PERFORMANCE OR ACCEPTANCE OF CONTRACT.

	CONNECTION SIZES
A	1 3/8" [35] DIA FIELD POWER SUPPLY HOLE
B	2" [51] DIA POWER SUPPLY KNOCKOUT
C	1 3/4" [44] DIA GAUGE ACCESS PLUG
D	7/8" [22] DIA FIELD CONTROL WIRING HOLE
E	3/4"-14 NPT CONDENSATE DRAIN
G	2 1/2 " [64] DIA POWER SUPPLY KNOCK-OUT

THRU-THE-BASE CHART
THESE HOLES REQUIRED FOR USE CRBTMPWR008A00, 009A00

	THREADED CONDUIT SIZE	WIRE USE	REQ'D HOLE SIZES (MAX.)
W	1/2"	115V	7/8" [22.2]
X	1/2"	24V	7/8" [22.2]
Y *	3/4"	POWER	1 1/8" [28.6]
Z**	(009A00) 1/2" FPT	GAS	1 1/8" [28.6]
	FOR "THRU-THE-BASEPAN" FACTORY OPTION, FITTINGS FOR ONLY X,Y, & Z ARE PROVIDED		
*	SELECT EITHER 3/4" OR 1/2" FOR POWER, DEPENDING ON WIRE SIZE		
**	(008A00) PROVIDES 3/4" FPT THRU CURB FLANGE & FITTING.		

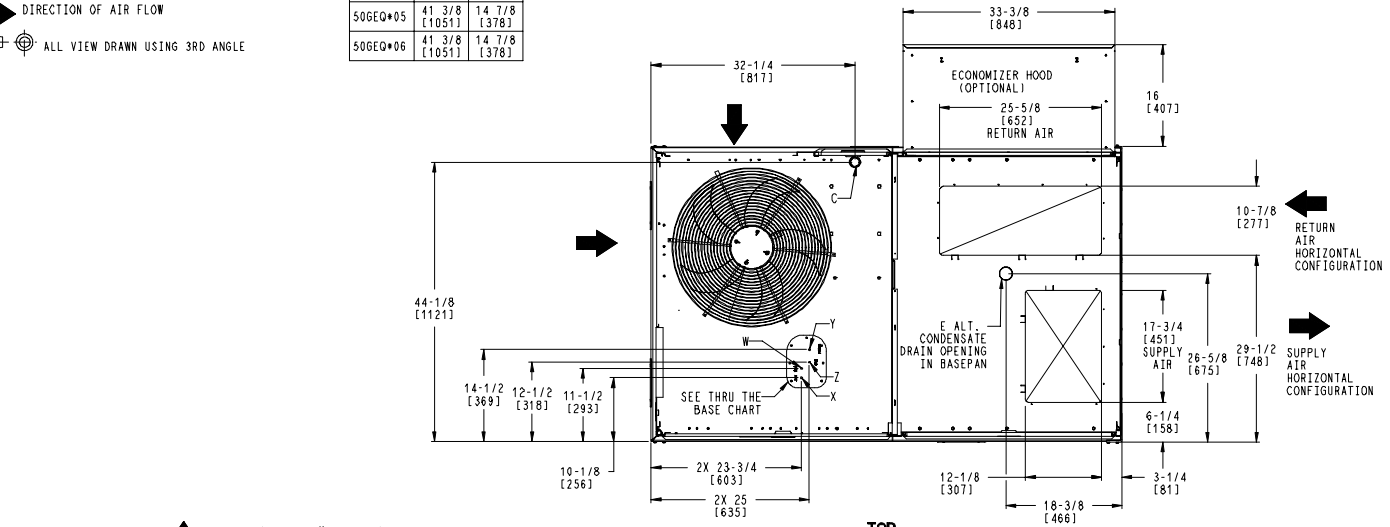

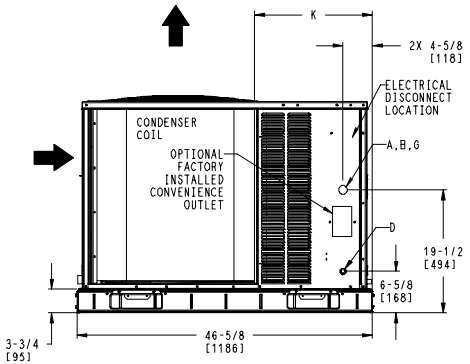

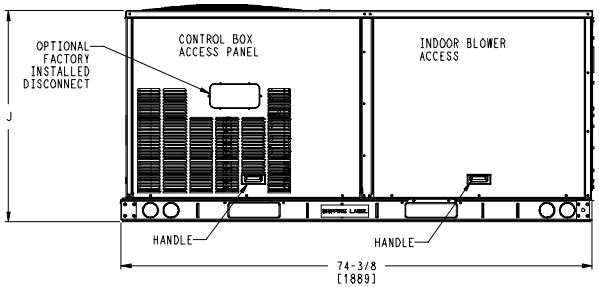

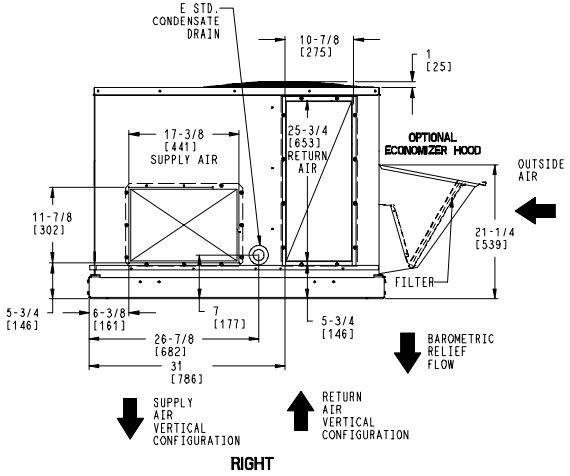

ITC CLASSIFICATION	SHEET	DATE	SUPERCEDES			REV
U.S. ECCN:NSR	1 OF 3	9/9/24	9/15/23	50GEQ 04-06 SINGLE PACKAGE HEAT PUMP	48TC006647	A

Certified Drawing for ID 1

Project: Climatec - City of Esc - Fire Station 1
Prepared By: Shawn Harlan

04/12/2025
07:47AM

UNIT	STD. UNIT WEIGHT *		CORNER WEIGHT (A)		CORNER WEIGHT (B)		CORNER WEIGHT (C)		CORNER WEIGHT (D)		C.G.		HEIGHT
	LBS.	KG.	LBS.	KG.	LBS.	KG.	LBS.	KG.	LBS.	KG.	X	Y	Z
50GEQ*04	475	215	128	58	120	54	110	50	117	53	36 [914]	22 3/8 [568]	16 1/8 [410]
50GEQ*05	594	269	163	74	148	67	135	61	149	68	35 3/8 [898]	22 5/16 [557]	16 1/2 [419]
50GEQ*06	596	270	163	74	148	67	135	61	149	68	35 3/8 [898]	22 5/16 [557]	16 1/2 [419]

*- STANDARD UNIT WEIGHT IS WITHOUT ELECTRIC HEAT AND WITHOUT PACKAGING.
FOR OTHER OPTIONS AND ACCESSORIES REFER TO THE PRODUCT DATA CATALOG.

Carrier
THIS DOCUMENT IS THE PROPERTY OF CARRIER CORPORATION AND IS DELIVERED UPON THE EXPRESS CONDITION THAT THE CONTENTS WILL NOT BE DISCLOSED OR USED WITHOUT CARRIER CORPORATION'S WRITTEN CONSENT.
SUBMISSION OF THESE DRAWINGS OR DOCUMENTS DOES NOT CONSTITUTE PART PERFORMANCE OR ACCEPTANCE OF CONTRACT.

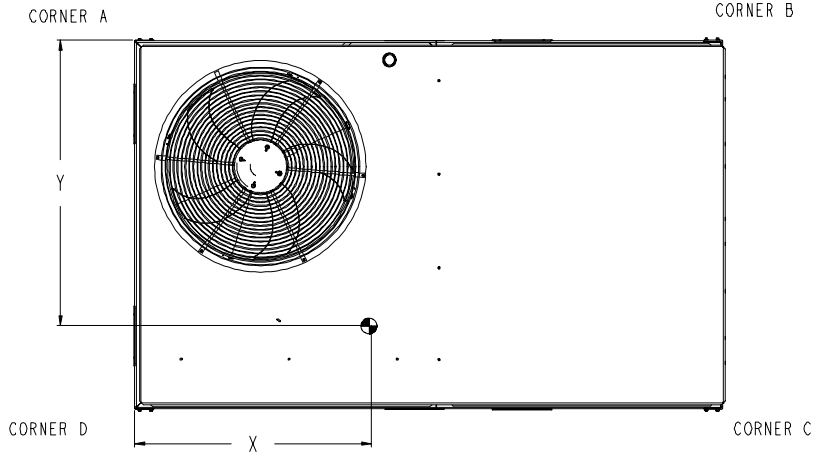

TOP

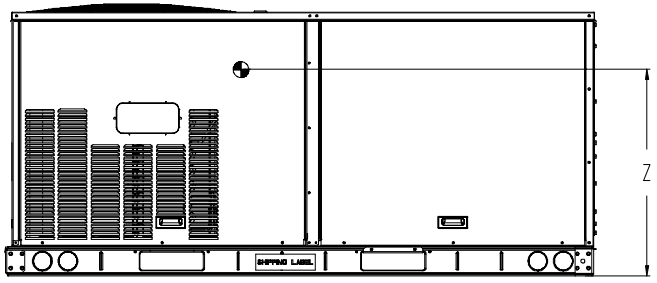

FRONT

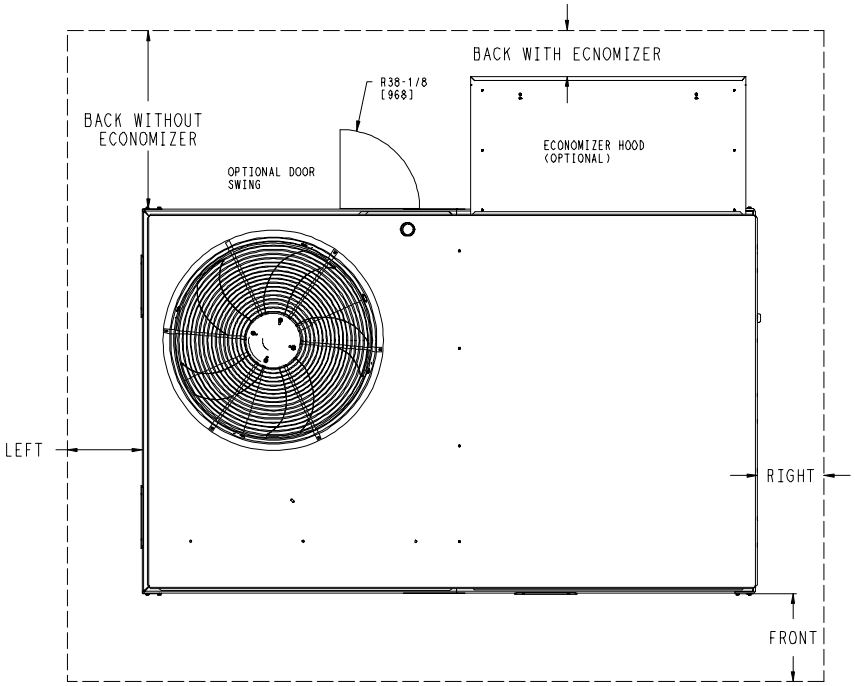

NOTE:

1. FOR ALL MINIMUM CLEARANCES LOCAL CODES OR JURISDICTIONS MAY PREVAIL.

CLEARANCE			
	SERVICE WITH:	SERVICE WITH:	OPERATING
SURFACE	CONDUCTIVE BARRIER	NONCONDUCTIVE BARRIER	CLEARANCE
FRONT	48 [1219mm]	36 [914mm]	18 [457mm]
LEFT	48 [1219mm]	42 [1067mm]	18 [457mm]
BACK W/O ECON	48 [1219mm]	42 [1067mm]	18 [457mm]
BACK W/ECON	36 [914mm]	36 [914mm]	18 [457mm]
RIGHT	36 [914mm]	36 [914mm]	18 [457mm]
TOP	72 [1829mm]	72 [1829mm]	72 [1829mm]

ITC CLASSIFICATION	SHEET	DATE	SUPERCEDES			REV
U.S. ECCN:NSR	2 OF 3	9/9/24	9/15/23	50GEQ 04-06 SINGLE PACKAGE HEAT PUMP	48TC006647	A

Certified Drawing for ID 1

Project: Climatec - City of Esc - Fire Station 1
Prepared By: Shawn Harlan

04/12/2025
07:47AM

Carrier | THIS DOCUMENT IS THE PROPERTY OF CARRIER CORPORATION AND IS DELIVERED UPON THE EXPRESS CONDITION THAT THE CONTENTS WILL NOT BE DISCLOSED OR USED WITHOUT CARRIER CORPORATION'S WRITTEN CONSENT. | SUBMISSION OF THESE DRAWINGS OR DOCUMENTS DOES NOT CONSTITUTE PART PERFORMANCE OR ACCEPTANCE OF CONTRACT.

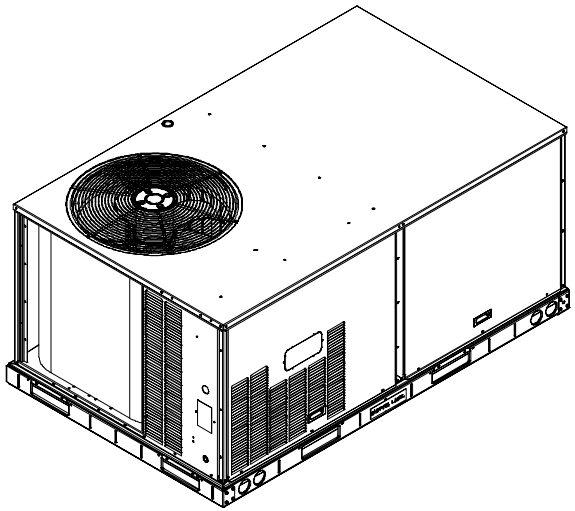

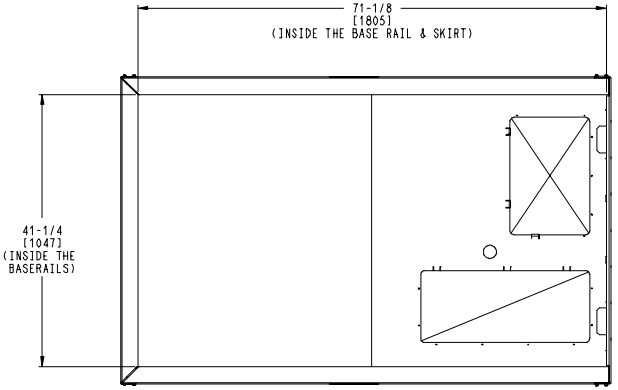

INSIDE BASERAIL DIMENSIONS
BOTTOM

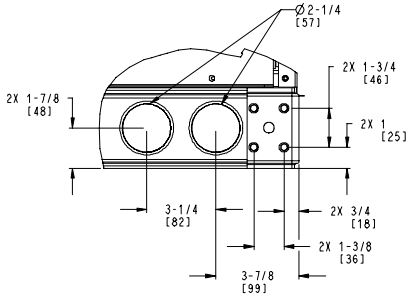

DETAIL **C**
TYP 4 PLCS

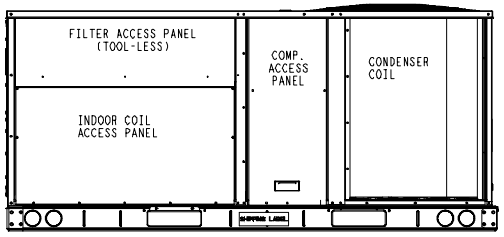

BACK

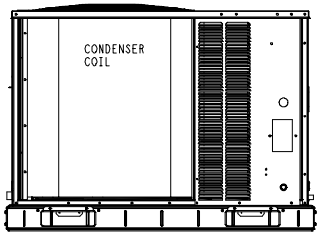

LEFT

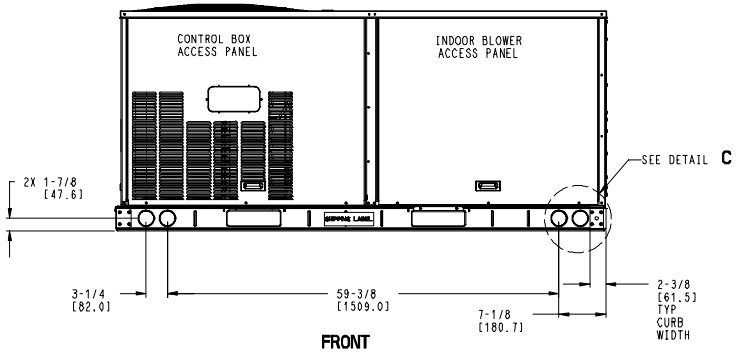

FRONT

ITC CLASSIFICATION	SHEET	DATE	SUPERCEDES			REV
U.S. ECCN:NSR	3 OF 3	9/9/24	9/15/23	50GEQ 04-06 SINGLE PACKAGE HEAT PUMP	48TC006647	A

Performance Summary For ID 1

Project: Climatec - City of Esc - Fire Station 1 04/12/2025
Prepared By: Shawn Harlan 07:47AM

Part Number:50GEQM04A2M5-0A0A0

Refrigerant:	**R-454B**	
ARI SEER:	**17.00**	
ARI SEER2:	**16.00**	
Application EER (Rooftop Unit only):	**12.00**	

Base Unit Dimensions

Unit Length:	**74.4**	in
Unit Width:	**46.6**	in
Unit Height:	**41.4**	in

Operating Weight

Base Unit Weight:	**567**	lb
Al/Cu - Al/Cu - Louvered Hail Guards:	**13**	lb
Total Operating Weight:	**580**	lb

Unit

Unit Voltage-Phase-Hertz:	**208-3-60**	
Air Discharge:	**Horizontal**	
Fan Drive Type:	**Direct Drive**	
Actual Airflow:	**1200**	CFM
Site Altitude:	**0**	ft

Cooling Performance

Condenser Entering Air DB:	**95.0**	F
Evaporator Entering Air DB:	**80.0**	F
Evaporator Entering Air WB:	**67.0**	F
Entering Air Enthalpy:	**31.44**	BTU/lb
Evaporator Leaving Air DB:	**58.5**	F
Evaporator Leaving Air WB:	**57.2**	F
Evaporator Leaving Air Enthalpy:	**24.52**	BTU/lb
Unit Discharge Air DB:	**59.6**	F
Unit Discharge Air WB:	**57.6**	F
Unit Discharge Air Enthalpy:	**24.80**	BTU/lb
Gross Cooling Capacity:	**37.36**	MBH
Net Cooling Capacity:	**35.86**	MBH
Gross Sensible Capacity:	**27.90**	MBH
Net Sensible Capacity:	**26.40**	MBH
Compressor Power Input:	**2.37**	kW
Coil Bypass Factor:	**0.027**	

Heating Performance

Outdoor Ambient Temperature:	**47.0**	F
Entering Air Indoor Coil DB:	**70.0**	F
Leaving Air Indoor Coil DB:	**96.1**	F
Total Heating Capacity:	**33.80**	MBH
Integrated Heating Capacity:	**33.80**	MBH
Heating Power Input:	**2.60**	kW
High Temperature COP:	**3.90**	
Low Temperature COP:	**2.40**	
HSPF:	**8.0**	
High Temperature COP2:	**3.90**	
Low Temperature COP2:	**2.40**	
HSPF2:	**6.7**	

Supply Fan

External Static Pressure:	**1.00**	in wg
Fan RPM:	**1916**	
Fan Power:	**0.51**	BHP

Performance Summary For ID 1

Project: Climatec - City of Esc - Fire Station 1 04/12/2025
Prepared By: Shawn Harlan 07:47AM

NOTE: **Selected IFM RPM Range: 1037 - 2190**

Selection includes construction throwaway filter into the base fan curve. This filter is not MERV Rated.

Electrical Data

Voltage Range:	**187 - 253**
Compressor #1 RLA:	**11.2**
Compressor #1 LRA:	**82**
Indoor Fan Motor Type:	**MED**
Indoor Fan Motor FLA (Total):	**5.1**
Power Supply MCA:	**22**
Power Supply MOCP (Fuse or HACR):	**30**
Disconnect Size FLA:	**22**
Disconnect Size LRA:	**93**
Electrical Convenience Outlet:	**None**
Outdoor Fan [Qty / FLA (ea)]:	**1 / 2.6**

Control Panel SCCR: 5kA RMS at Rated Symmetrical Voltage

Acoustics

Sound Power Levels, db re 10E-12 Watts

	Discharge	Inlet	Outdoor
63 Hz	92.0	85.8	85.6
125 Hz	83.3	78.7	84.7
250 Hz	76.1	69.6	80.5
500 Hz	68.7	62.3	76.0
1000 Hz	66.1	63.7	72.4
2000 Hz	63.0	55.4	68.0
4000 Hz	59.0	49.6	62.8
8000 Hz	56.9	43.0	59.3
A-Weighted	74.2	68.9	79.0

Advanced Acoustics

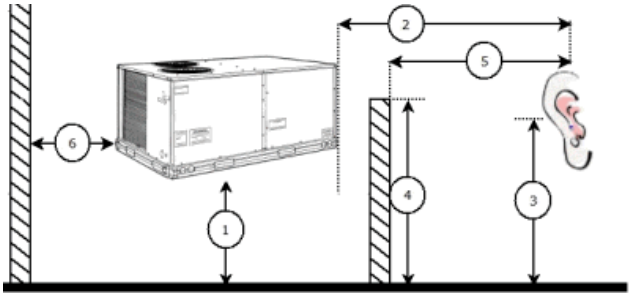

Advanced Accoustics Parameters

1. Unit height above ground: **30.0** ft
2. Horizontal distance from unit to receiver: **50.0** ft
3. Receiver height above ground: **5.7** ft
4. Height of obstruction: **0.0** ft
5. Horizontal distance from obstruction to receiver: **0.0** ft
6. Horizontal distance from unit to obstruction: **0.0** ft

Detailed Acoustics Information

Performance Summary For ID 1

Project: Climatec - City of Esc - Fire Station 1 04/12/2025
Prepared By: Shawn Harlan 07:47AM

Octave Band Center Freq. Hz	63	125	250	500	1k	2k	4k	8k	Overall
A	85.6	84.7	80.5	76.0	72.4	68.0	62.8	59.3	89.2 Lw
B	59.4	68.6	71.9	72.8	72.4	69.2	63.8	58.2	78.5 LwA
C	53.2	52.3	48.1	43.6	40.0	35.6	30.4	26.9	56.8 Lp
D	27.0	36.2	39.5	40.4	40.0	36.8	31.4	25.8	46.1 LpA

Legend
A Sound Power Levels at Unit's Acoustic Center, Lw
B A-Weighted Sound Power Levels at Unit's Acoustic Center, LwA
C Sound Pressure Levels at Specific Distance from Unit, Lp
D A-Weighted Sound Pressure Levels at Specific Distance from Unit, LpA

Calculation methods used in this program are patterned after the ASHRAE Guide; other ASHRAE Publications and the AHRI Acoustical Standards. While a very significant effort has been made to insure the technical accuracy of this program, it is assumed that the user is knowledgeable in the art of system sound estimation and is aware of the tolerances involved in real world acoustical estimation. This program makes certain assumptions as to the dominant sound sources and sound paths which may not always be appropriate to the real system being estimated. Because of this, no assurances can be offered that this software will always generate an accurate sound prediction from user supplied input data. If in doubt about the estimation of expected sound levels in a space, an Acoustical Engineer or a person with sound prediction expertise should be consulted.

Fan Curve

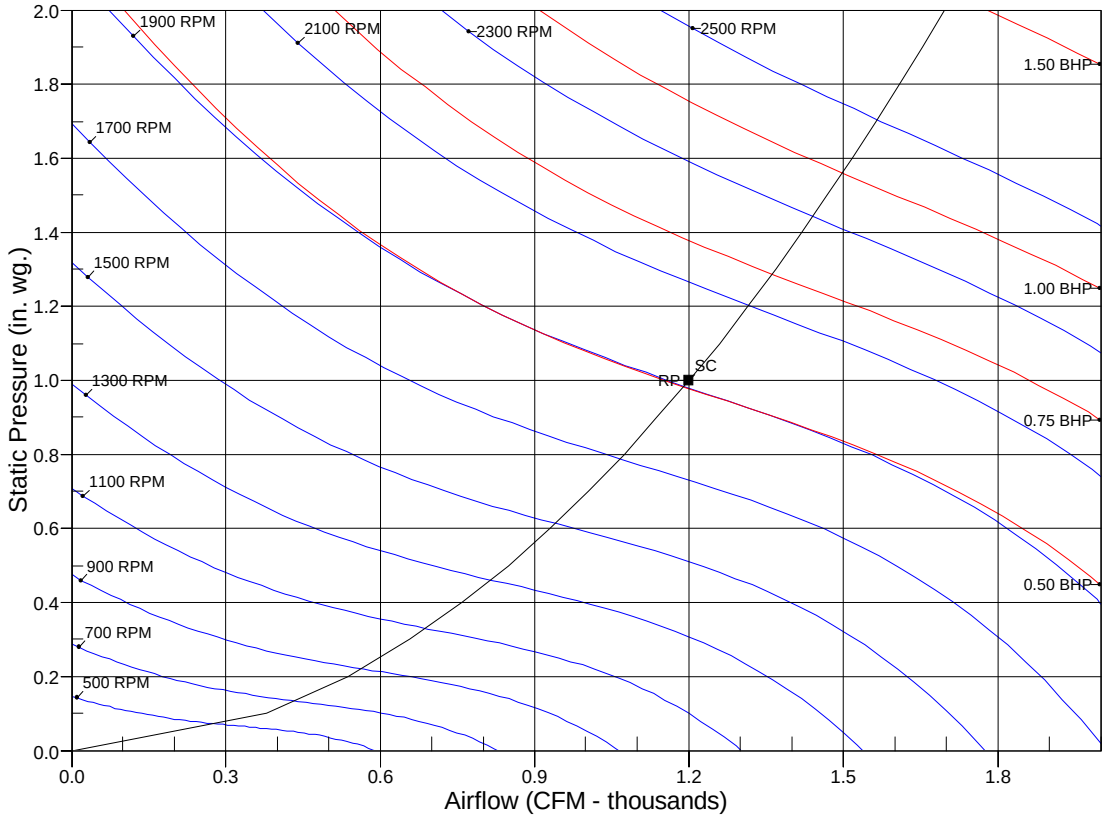

RPM = 1916 BHP = 0.51 Maximum RPM = 2490 Maximum BHP = 3.00
SC - System Curve RP - Rated Point

ID 2

Tag Cover Sheet
Unit Report
Certified Drawing
Performance Report

Unit Report For ID 2

Project: Climatec - City of Esc - Fire Station 1 04/12/2025
Prepared By: Shawn Harlan 07:47AM

Unit Parameters

Unit Model: **50FEQM07A2M5-0A0A0**
Unit Size: **07 (6 Tons)**
Volts-Phase-Hertz: **208-3-60**
Heating Type: **Heat Pump**
Refrigerant: **R-454B**
Heat Control: **Two Stage Cooling, Single Circuit (07)**
Duct Cfg: **Horizontal Supply / Horizontal Return**

Dimensions (ft. in.) & Weight (lb.) ***

Unit Length: **6' 2.375"**
Unit Width: **3' 10.625"**
Unit Height: **3' 5.375"**
Total Operating Weight: **636** lb

*** Weights and Dimensions are approximate. Weight does not include unit packaging. Approximate dimensions are provided primarily for shipping purposes. For exact dimensions and weights, refer to appropriate product data catalog.

Lines and Filters

Return Air Filter Type: **Throwaway**
Return Air Filter Quantity: **4**
Return Air Filter Size: **16 x 16 x 2**

Selection includes construction throwaway filter into the base fan curve.

Unit Configuration

Standard/Medium Static - EcoBlue Vane Axial Fan
Al/Cu - Al/Cu - Louvered Hail Guards
Standard Electromechanical Controls (can be used with field installed economizers and dampers)
Standard Packaging

Warranty Information

5-Year compressor parts (STD.)
1-Year parts (STD.)

No optional warranties were selected.

NOTE: Please see Warranty Catalog 500-089 for explanation of policies and ordering methods.

Ordering Information

Part Number	Description	Quantity
50FEQM07A2M5-0A0A0	Rooftop Unit	1
Field Installed Accessories		
CRPWREXH028A01	Horizontal Power Exhaust	1

Certified Drawing for ID 2

Project: Climatec - City of Esc - Fire Station 1
Prepared By: Shawn Harlan

04/12/2025
07:47AM

NOTES:

1. DIMENSIONS ARE IN INCHES. DIMENSIONS IN [ ] ARE IN MILLIMETERS.
2. CENTER OF GRAVITY
3. DIRECTION OF AIR FLOW
4. ALL VIEW DRAWN USING 3RD ANGLE

UNIT	J	K
50FEQ*04	33 3/8 [847]	18 5/8 [472]
50FEQ*05	33 3/8 [847]	14 7/8 [377]
50FEQ*06	41 3/8 [1051]	14 7/8 [377]
50FEQ*07	41 3/8 [1051]	14 7/8 [377]

Carrier
THIS DOCUMENT IS THE PROPERTY OF CARRIER CORPORATION AND IS DELIVERED UPON THE EXPRESS CONDITION THAT THE CONTENTS WILL NOT BE DISCLOSED OR USED WITHOUT CARRIER CORPORATION'S WRITTEN CONSENT.
SUBMISSION OF THESE DRAWINGS OR DOCUMENTS DOES NOT CONSTITUTE PART PERFORMANCE OR ACCEPTANCE OF CONTRACT.

	CONNECTION SIZES
A	1 3/8" [35] DIA FIELD POWER SUPPLY HOLE
B	2" [51] DIA POWER SUPPLY KNOCKOUT
C	1 3/4" [44] DIA GAUGE ACCESS PLUG
D	7/8" [22] DIA FIELD CONTROL WIRING HOLE
E	3/4"-14 NPT CONDENSATE DRAIN
G	2 1/2 " [64] DIA POWER SUPPLY KNOCK-OUT

THRU-THE-BASE CHART
THESE HOLES REQUIRED FOR USE CRBTMPWR008A00, 009A00

	THREADED CONDUIT SIZE	WIRE USE	REQ'D HOLE SIZES (MAX.)
W	1/2"	115V	7/8" [22.2]
X	1/2"	24V	7/8" [22.2]
Y *	3/4"	POWER	1 1/8" [28.6]
Z**	(009A00) 1/2" FPT	GAS	1 1/8" [28.6]
	FOR "THRU-THE-BASEPAN" FACTORY OPTION, FITTINGS FOR ONLY X,Y, & Z ARE PROVIDED		
*	SELECT EITHER 3/4" OR 1/2" FOR POWER, DEPENDING ON WIRE SIZE		
**	(008A00) PROVIDES 3/4" FPT THRU CURB FLANGE & FITTING.		

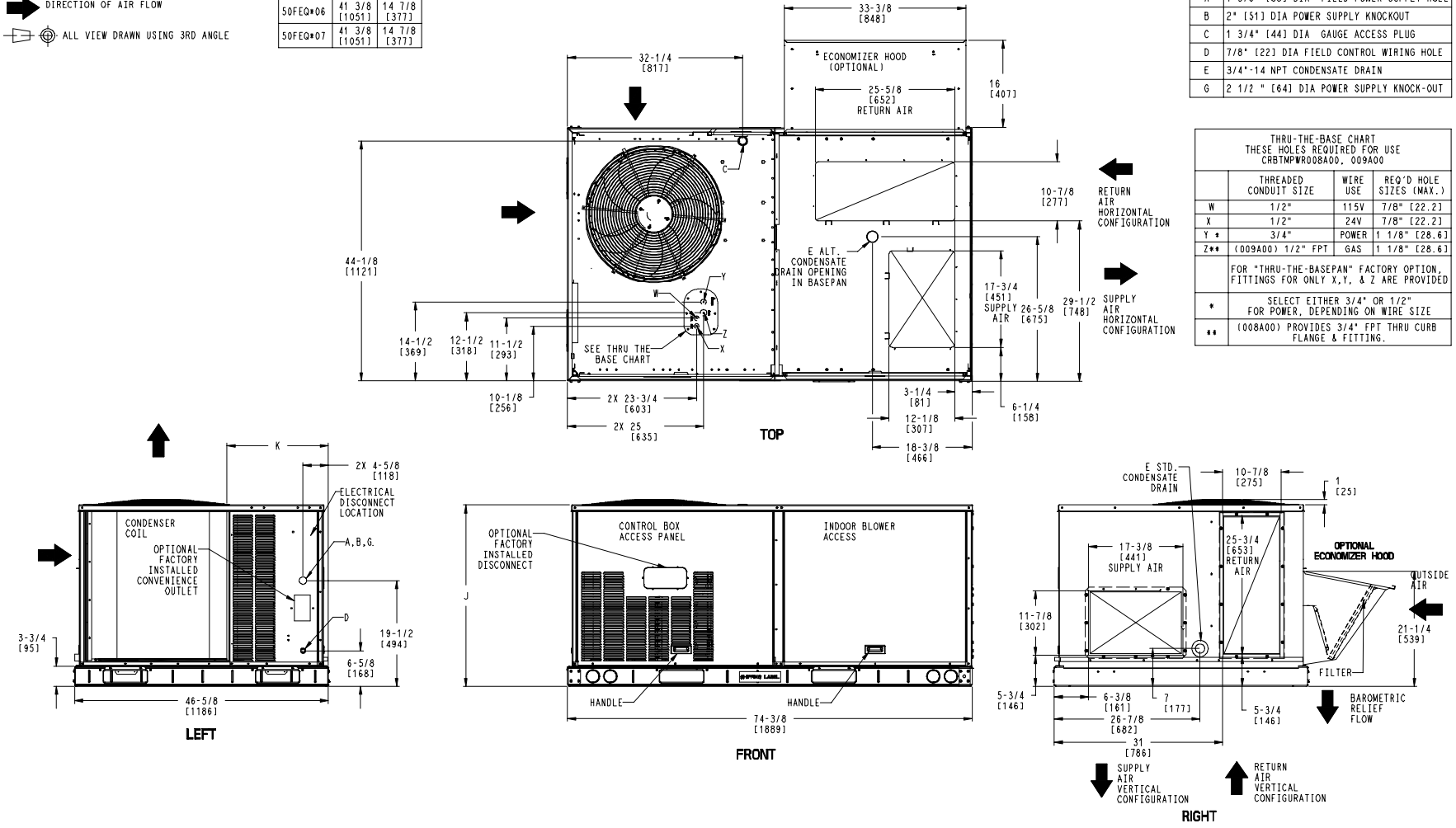

ITC CLASSIFICATION	SHEET	DATE	SUPERCEDES			REV
U.S. ECCN:NSR	1 OF 3	08/30/24	01/17/24	50FEQ 04-07 SINGLE PACKAGE HEAT PUMP	48TC007000	A

Certified Drawing for ID 2

Project: Climatec - City of Esc - Fire Station 1
Prepared By: Shawn Harlan

04/12/2025
07:47AM

UNIT	STD. UNIT WEIGHT♦		CORNER WEIGHT (A)		CORNER WEIGHT (B)		CORNER WEIGHT (C)		CORNER WEIGHT (D)		C.G.		HEIGHT
	LBS.	KG.	LBS.	KG.	LBS.	KG.	LBS.	KG.	LBS.	KG.	X	Y	Z
50FEQ*04	476	216	128	58	120	54	110	50	118	54	36 [914]	22 3/8 [568]	16 1/8 [410]
50FEQ*05	473	215	127	58	119	54	110	50	117	53	36 [914]	22 3/8 [568]	16 1/8 [410]
50FEQ*06	584	265	158	72	145	66	134	61	147	67	35 1/2 [902]	22 1/2 [572]	16 1/2 [419]
50FEQ*07	589	267	161	73	146	66	134	61	147	67	35 3/8 [898]	22 5/16 [557]	16 1/2 [419]

♦ STANDARD UNIT WEIGHT IS WITHOUT ELECTRIC HEAT AND WITHOUT PACKAGING.
FOR OTHER OPTIONS AND ACCESSORIES, REFER TO THE PRODUCT DATA CATALOG.

Carrier
THIS DOCUMENT IS THE PROPERTY OF CARRIER CORPORATION AND IS DELIVERED UPON THE EXPRESS CONDITION THAT THE CONTENTS WILL NOT BE DISCLOSED OR USED WITHOUT CARRIER CORPORATION'S WRITTEN CONSENT.
SUBMISSION OF THESE DRAWINGS OR DOCUMENTS DOES NOT CONSTITUTE PART PERFORMANCE OR ACCEPTANCE OF CONTRACT.

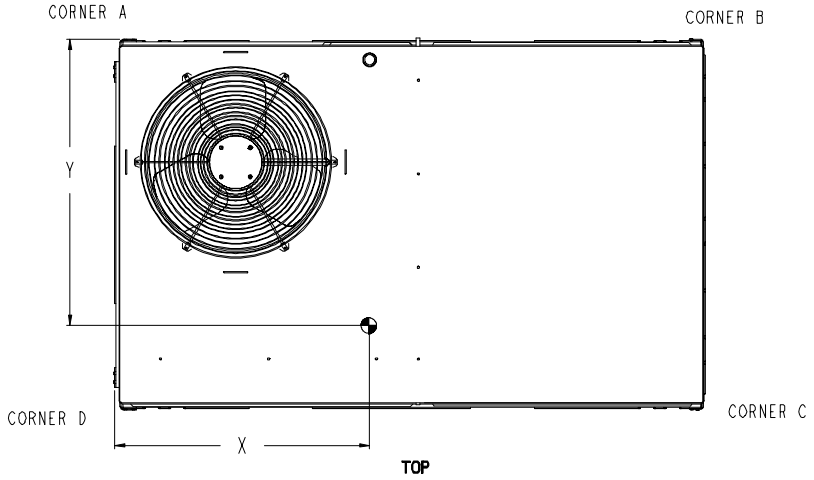

TOP

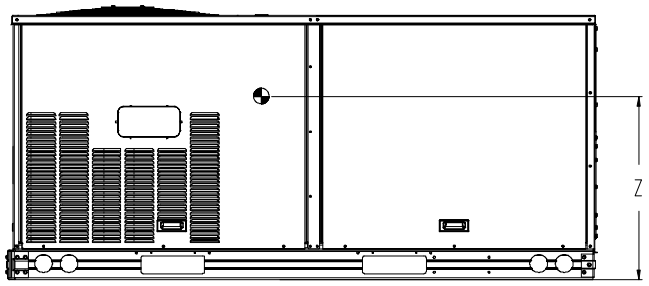

FRONT

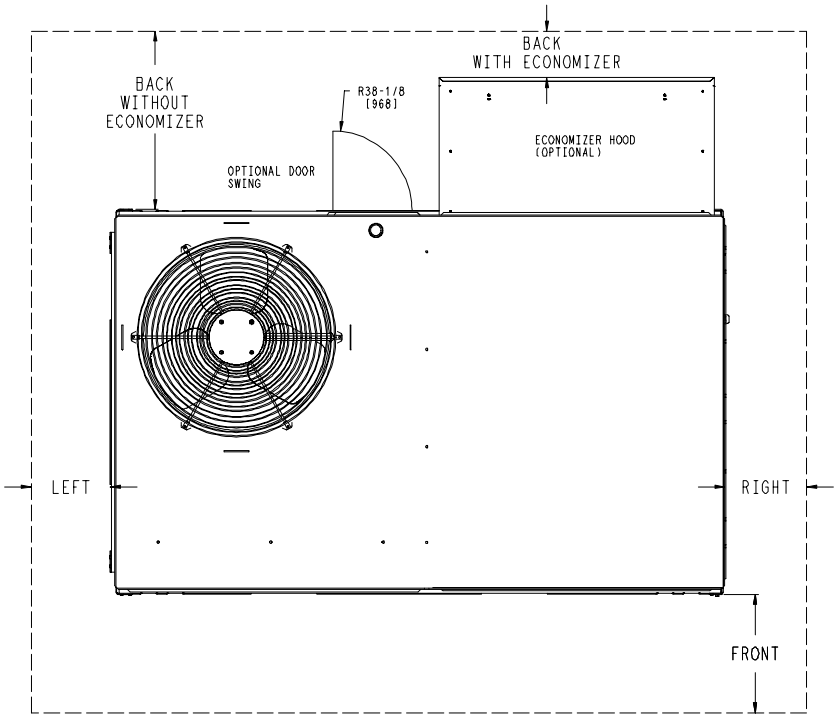

NOTE:

1. FOR ALL MINIMUM CLEARANCES LOCAL CODES OR JURISDICTIONS MAY PREVAIL.

	CLEARANCE		
	SERVICE WITH:	SERVICE WITH:	OPERATING
SURFACE	CONDUCTIVE BARRIER	NONCONDUCTIVE BARRIER	CLEARANCE
FRONT	48 [1219mm]	36 [914mm]	18 [457mm]
LEFT	48 [1219mm]	42 [1067mm]	18 [457mm]
BACK W/O ECON	48 [1219mm]	42 [1067mm]	18 [457mm]
BACK W/ECON	36 [914mm]	36 [914mm]	18 [457mm]
RIGHT	36 [914mm]	36 [914mm]	18 [457mm]
TOP	72 [1829mm]	72 [1829mm]	72 [1829mm]

ITC CLASSIFICATION	SHEET	DATE	SUPERCEDES			REV
U.S. ECCN:NSR	2 OF 3	08/30/24	01/17//24	50FEQ 04-07 SINGLE PACKAGE HEAT PUMP	48TC007000	A

Certified Drawing for ID 2

Project: Climatec - City of Esc - Fire Station 1
Prepared By: Shawn Harlan

04/12/2025
07:47AM

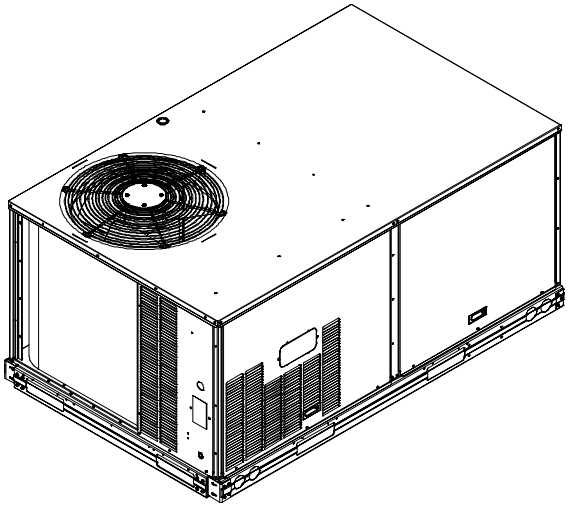

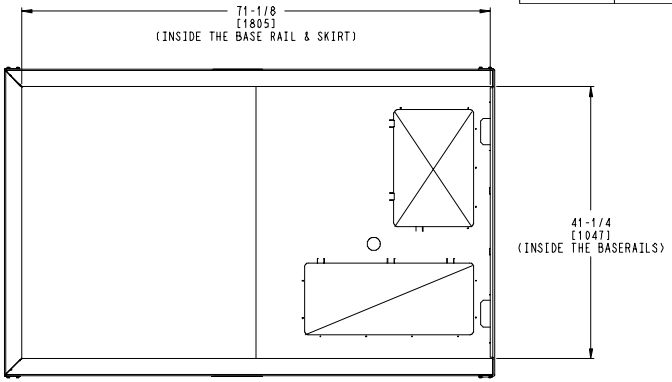

INSIDE BASERAIL DIMENSIONS
BOTTOM

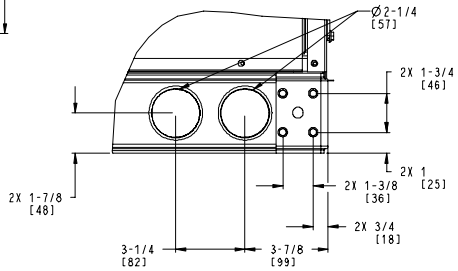

DETAIL C
TYP 4 PLCS

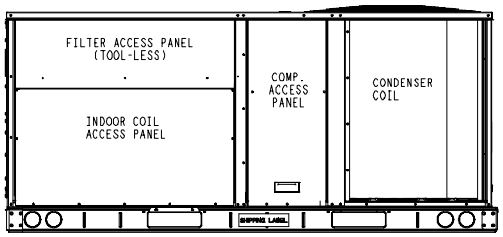

BACK

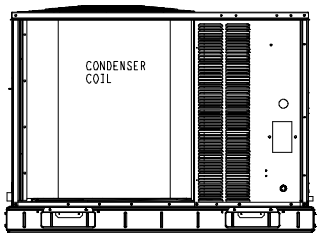

LEFT

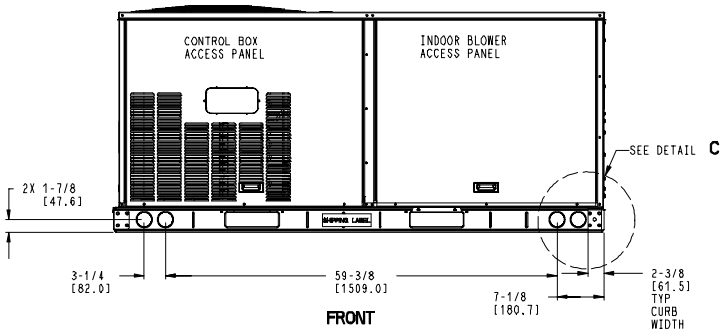

FRONT

ITC CLASSIFICATION	SHEET	DATE	SUPERCEDES			REV
U.S. ECCN:NSR	3 OF 3	08/30/24	01/17/24	50FEQ 04-07 SINGLE PACKAGE HEAT PUMP	48TC007000	A

Performance Summary For ID 2

Project: Climatec - City of Esc - Fire Station 1 04/12/2025
Prepared By: Shawn Harlan 07:47AM

Part Number:50FEQM07A2M5-0A0A0

Refrigerant:	**R-454B**	
ARI EER:	**11.20**	
Application EER (Rooftop Unit only):	**10.99**	
IEER:	**15.0**	
Base Unit Dimensions		
Unit Length:	**74.4**	in
Unit Width:	**46.6**	in
Unit Height:	**41.4**	in
Operating Weight		
Base Unit Weight:	**589**	lb
Al/Cu - Al/Cu - Louvered Hail Guards:	**17**	lb
Accessories		
Horizontal Power Exhaust:	**30**	lb
Total Operating Weight:	**636**	lb
Unit		
Unit Voltage-Phase-Hertz:	**208-3-60**	
Air Discharge:	**Horizontal**	
Fan Drive Type:	**Vane Axial**	
Actual Airflow:	**2400**	CFM
Site Altitude:	**0**	ft
Cooling Performance		
Condenser Entering Air DB:	**95.0**	F
Evaporator Entering Air DB:	**80.0**	F
Evaporator Entering Air WB:	**67.0**	F
Entering Air Enthalpy:	**31.44**	BTU/lb
Evaporator Leaving Air DB:	**57.9**	F
Evaporator Leaving Air WB:	**57.4**	F
Evaporator Leaving Air Enthalpy:	**24.67**	BTU/lb
Unit Discharge Air DB:	**59.1**	F
Unit Discharge Air WB:	**57.9**	F
Unit Discharge Air Enthalpy:	**24.96**	BTU/lb
Gross Cooling Capacity:	**73.11**	MBH
Net Cooling Capacity:	**70.01**	MBH
Gross Sensible Capacity:	**57.24**	MBH
Net Sensible Capacity:	**54.14**	MBH
Compressor Power Input:	**5.16**	kW
Coil Bypass Factor:	**0.018**	
Heating Performance		
Outdoor Ambient Temperature:	**47.0**	F
Entering Air Indoor Coil DB:	**70.0**	F
Leaving Air Indoor Coil DB:	**96.9**	F
Total Heating Capacity:	**69.80**	MBH
Integrated Heating Capacity:	**69.80**	MBH
Heating Power Input:	**5.10**	kW
High Temperature COP:	**3.40**	
Low Temperature COP:	**2.25**	
Supply Fan		
External Static Pressure:	**1.00**	in wg
Options / Accessories Static Pressure		
Power Exhaust:	**(Fan Data Includes Drop)**	
Application External Static (ESP + Unit Opts/Acc.):	**1.00**	in wg
Fan RPM:	**2163**	

Performance Summary For ID 2

Project: Climatec - City of Esc - Fire Station 1 04/12/2025
Prepared By: Shawn Harlan 07:47AM

Fan Power: **1.07** BHP
NOTE: **Selected IFM RPM Range: 1378 - 2530**

Selection includes construction throwaway filter into the base fan curve. This filter is not MERV Rated.

Power Exhaust
Return Duct Static: **0.40** in wg
Max. Air To Exhaust: **1300** CFM

Electrical Data
Voltage Range: **187 - 253**
Compressor #1 RLA: **21**
Compressor #1 LRA: **162**
Indoor Fan Motor Type: **MED**
Indoor Fan Motor FLA (Total): **5.5**
Power Supply MCA: **36**
Power Supply MOCP (Fuse or HACR): **50**
Disconnect Size FLA: **34**
Disconnect Size LRA: **176**
Electrical Convenience Outlet: **None**
Power Exhaust [Kit Qty / FLA(ea kit)]: **1 / 1.9**
Outdoor Fan [Qty / FLA (ea)]: **1 / 1.5**

Control Panel SCCR: 5kA RMS at Rated Symmetrical Voltage

Acoustics
Sound Power Levels, db re 10E-12 Watts

	Discharge	Inlet	Outdoor
63 Hz	92.0	90.7	85.6
125 Hz	83.4	80.5	84.7
250 Hz	77.7	72.7	80.5
500 Hz	75.4	67.7	76.0
1000 Hz	72.2	69.7	72.4
2000 Hz	69.8	60.7	68.0
4000 Hz	65.6	54.1	62.8
8000 Hz	61.2	48.0	59.3
A-Weighted	78.4	73.5	79.0

Advanced Acoustics

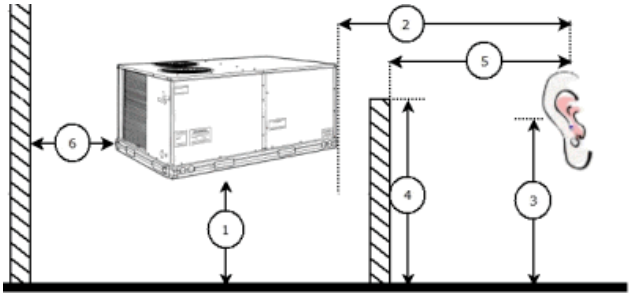

Advanced Accoustics Parameters
1. Unit height above ground: **30.0** ft
2. Horizontal distance from unit to receiver: **50.0** ft
3. Receiver height above ground: **5.7** ft
4. Height of obstruction: **0.0** ft
5. Horizontal distance from obstruction to receiver: **0.0** ft

Performance Summary For ID 2

Project: Climatec - City of Esc - Fire Station 1 04/12/2025
Prepared By: Shawn Harlan 07:47AM

6. Horizontal distance from unit to obstruction:.....**0.0** ft

Detailed Acoustics Information

Octave Band Center Freq. Hz	63	125	250	500	1k	2k	4k	8k	Overall
A	85.6	84.7	80.5	76.0	72.4	68.0	62.8	59.3	89.2 Lw
B	59.4	68.6	71.9	72.8	72.4	69.2	63.8	58.2	78.5 LwA
C	53.2	52.3	48.1	43.6	40.0	35.6	30.4	26.9	56.8 Lp
D	27.0	36.2	39.5	40.4	40.0	36.8	31.4	25.8	46.1 LpA

Legend
A Sound Power Levels at Unit's Acoustic Center, Lw
B A-Weighted Sound Power Levels at Unit's Acoustic Center, LwA
C Sound Pressure Levels at Specific Distance from Unit, Lp
D A-Weighted Sound Pressure Levels at Specific Distance from Unit, LpA

Calculation methods used in this program are patterned after the ASHRAE Guide; other ASHRAE Publications and the AHRI Acoustical Standards. While a very significant effort has been made to insure the technical accuracy of this program, it is assumed that the user is knowledgeable in the art of system sound estimation and is aware of the tolerances involved in real world acoustical estimation. This program makes certain assumptions as to the dominant sound sources and sound paths which may not always be appropriate to the real system being estimated. Because of this, no assurances can be offered that this software will always generate an accurate sound prediction from user supplied input data. If in doubt about the estimation of expected sound levels in a space, an Acoustical Engineer or a person with sound prediction expertise should be consulted.

Fan Curve

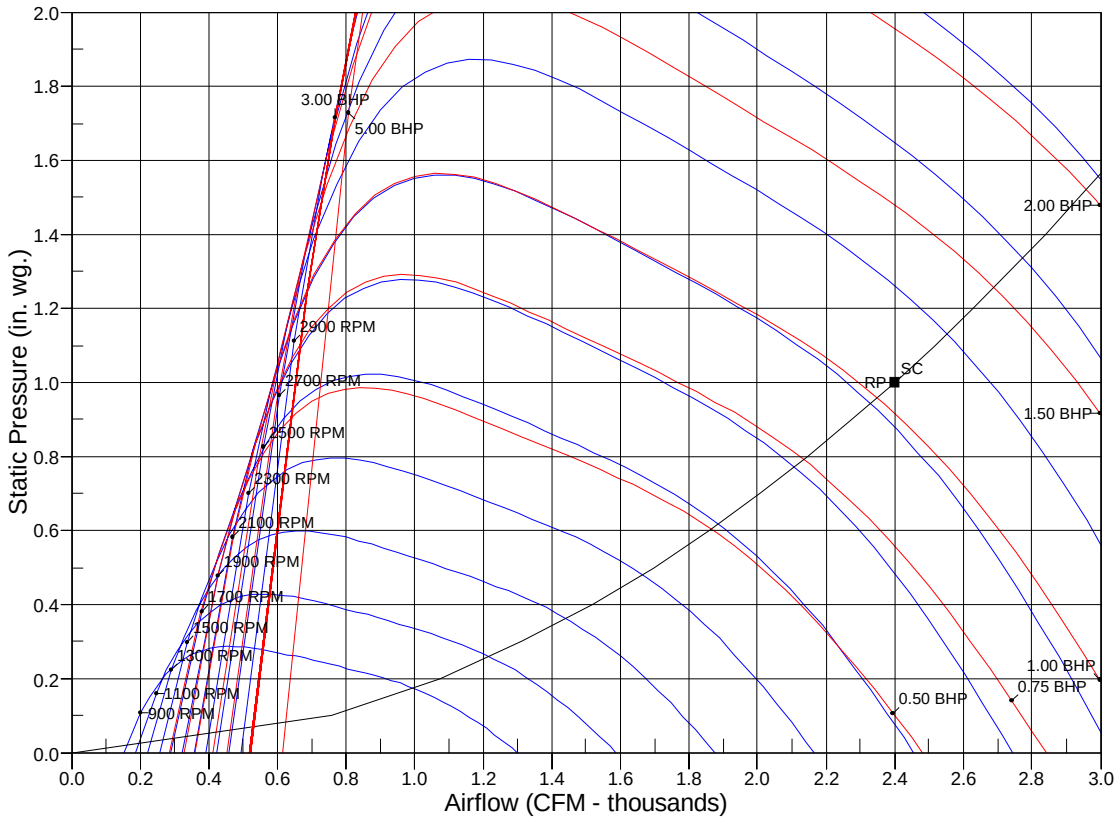

RPM = 2163 BHP = 1.07 Maximum RPM = 2836 Maximum BHP = 3.00
SC - System Curve RP - Rated Point

ID 3

Tag Cover Sheet
Unit Report
Certified Drawing
Performance Report

Unit Report For ID 3

Project: Climatec - City of Esc - Fire Station 1 04/12/2025
Prepared By: Shawn Harlan 07:47AM

Unit Parameters

Unit Model: **50GEQM06A2M5-0A0A0**
Unit Size: **06 (5 Tons)**
Volts-Phase-Hertz: **208-3-60**
Heating Type: **Heat Pump**
Refrigerant: **R-454B**
Heat Control: **Two Stage Cooling, Single Circuit**
Duct Cfg: **Horizontal Supply / Horizontal Return**

Dimensions (ft. in.) & Weight (lb.) ***

Unit Length: **6' 2.375"**
Unit Width: **3' 10.625"**
Unit Height: **3' 5.375"**
Total Operating Weight: **613** lb

*** Weights and Dimensions are approximate. Weight does not include unit packaging. Approximate dimensions are provided primarily for shipping purposes. For exact dimensions and weights, refer to appropriate product data catalog.

Lines and Filters

Return Air Filter Type: **Throwaway**
Return Air Filter Quantity: **4**
Return Air Filter Size: **16 x 16 x 2**

Selection includes construction throwaway filter into the base fan curve.

Unit Configuration

Standard/Medium Static - EcoBlue Vane Axial Fan
Al/Cu - Al/Cu - Louvered Hail Guards
Standard Electromechanical Controls (can be used with field installed economizers and dampers)
Standard

Warranty Information

5-Year compressor parts (STD.)
1-Year parts (STD.)

No optional warranties were selected.

NOTE: Please see Warranty Catalog 500-089 for explanation of policies and ordering methods.

Ordering Information

Part Number	Description	Quantity
50GEQM06A2M5-0A0A0	Rooftop Unit	1

Certified Drawing for ID 3

Project: Climatec - City of Esc - Fire Station 1
Prepared By: Shawn Harlan

04/12/2025
07:47AM

NOTES:

1. DIMENSIONS ARE IN INCHES, DIMENSIONS IN [ ] ARE IN MILLIMETERS.
2. CENTER OF GRAVITY
3. DIRECTION OF AIR FLOW
4. ALL VIEW DRAWN USING 3RD ANGLE

UNIT	J	K
50GEQ*04	33 3/8 [847]	18 5/8 [472]
50GEQ*05	41 3/8 [1051]	14 7/8 [378]
50GEQ*06	41 3/8 [1051]	14 7/8 [378]

Carrier
THIS DOCUMENT IS THE PROPERTY OF CARRIER CORPORATION AND IS DELIVERED UPON THE EXPRESS CONDITION THAT THE CONTENTS WILL NOT BE DISCLOSED OR USED WITHOUT CARRIER CORPORATION'S WRITTEN CONSENT.
SUBMISSION OF THESE DRAWINGS OR DOCUMENTS DOES NOT CONSTITUTE PART PERFORMANCE OR ACCEPTANCE OF CONTRACT.

	CONNECTION SIZES
A	1 3/8" [35] DIA FIELD POWER SUPPLY HOLE
B	2" [51] DIA POWER SUPPLY KNOCKOUT
C	1 3/4" [44] DIA GAUGE ACCESS PLUG
D	7/8" [22] DIA FIELD CONTROL WIRING HOLE
E	3/4"-14 NPT CONDENSATE DRAIN
G	2 1/2 " [64] DIA POWER SUPPLY KNOCK-OUT

THRU-THE-BASE CHART
THESE HOLES REQUIRED FOR USE CRBTMPWR008A00, 009A00

	THREADED CONDUIT SIZE	WIRE USE	REQ'D HOLE SIZES (MAX.)
W	1/2"	115V	7/8" [22.2]
X	1/2"	24V	7/8" [22.2]
Y *	3/4"	POWER	1 1/8" [28.6]
Z**	(009A00) 1/2" FPT	GAS	1 1/8" [28.6]
	FOR "THRU-THE-BASEPAN" FACTORY OPTION, FITTINGS FOR ONLY X,Y, & Z ARE PROVIDED		
*	SELECT EITHER 3/4" OR 1/2" FOR POWER, DEPENDING ON WIRE SIZE		
**	(008A00) PROVIDES 3/4" FPT THRU CURB FLANGE & FITTING.		

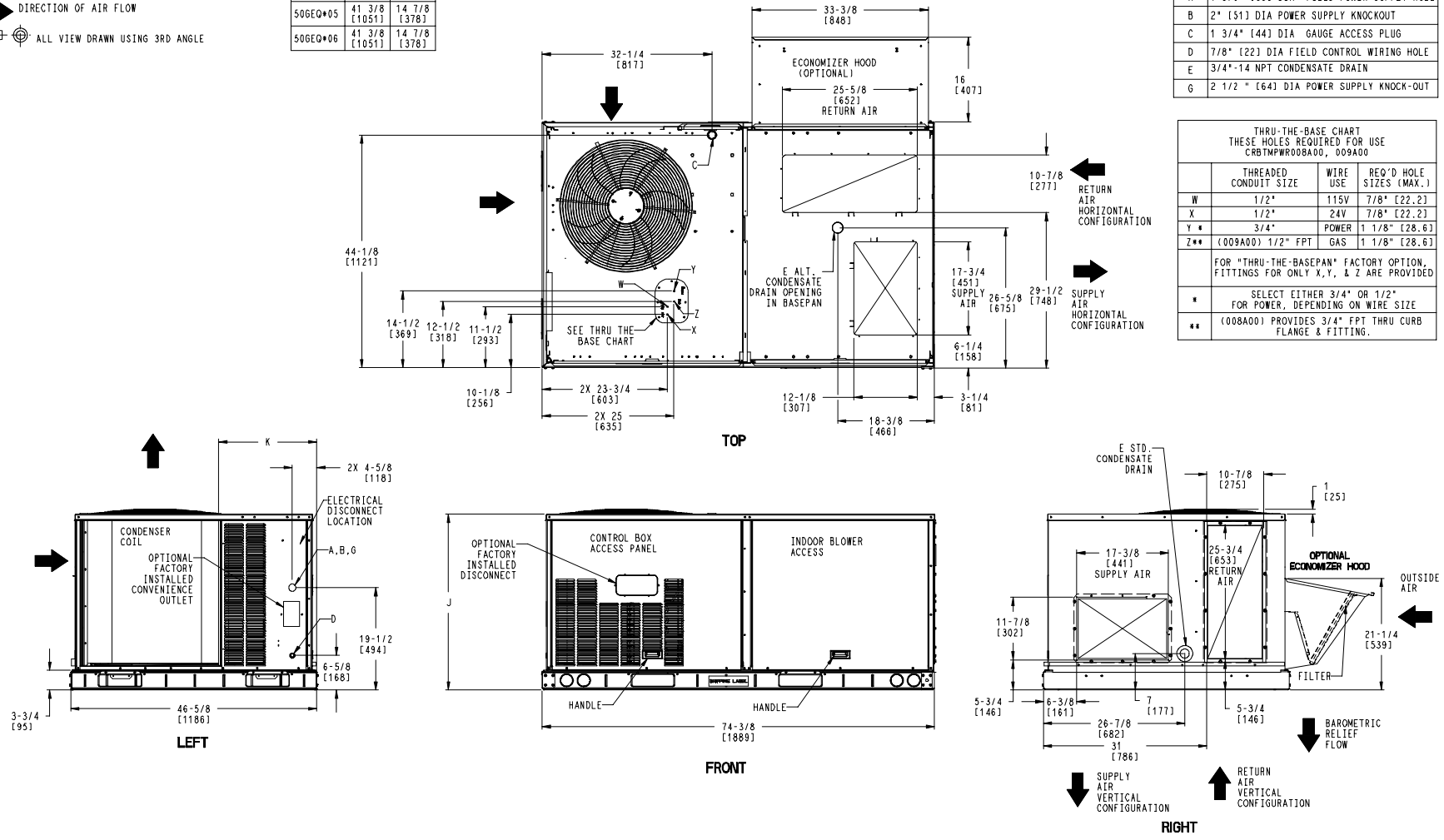

ITC CLASSIFICATION	SHEET	DATE	SUPERCEDES	50GEQ 04-06 SINGLE PACKAGE HEAT PUMP		REV
U.S. ECCN:NSR	1 OF 3	9/9/24	9/15/23		48TC006647	A

Certified Drawing for ID 3

Project: Climatec - City of Esc - Fire Station 1
Prepared By: Shawn Harlan

04/12/2025
07:47AM

UNIT	STD. UNIT WEIGHT *		CORNER WEIGHT (A)		CORNER WEIGHT (B)		CORNER WEIGHT (C)		CORNER WEIGHT (D)		C.G.		HEIGHT
	LBS.	KG.	LBS.	KG.	LBS.	KG.	LBS.	KG.	LBS.	KG.	X	Y	Z
50GEQ*04	475	215	128	58	120	54	110	50	117	53	36 [914]	22 3/8 [568]	16 1/8 [410]
50GEQ*05	594	269	163	74	148	67	135	61	149	68	35 3/8 [898]	22 5/16 [557]	16 1/2 [419]
50GEQ*06	596	270	163	74	148	67	135	61	149	68	35 3/8 [898]	22 5/16 [557]	16 1/2 [419]

*- STANDARD UNIT WEIGHT IS WITHOUT ELECTRIC HEAT AND WITHOUT PACKAGING.
FOR OTHER OPTIONS AND ACCESSORIES REFER TO THE PRODUCT DATA CATALOG.

Carrier
THIS DOCUMENT IS THE PROPERTY OF CARRIER CORPORATION AND IS DELIVERED UPON THE EXPRESS CONDITION THAT THE CONTENTS WILL NOT BE DISCLOSED OR USED WITHOUT CARRIER CORPORATION'S WRITTEN CONSENT.
SUBMISSION OF THESE DRAWINGS OR DOCUMENTS DOES NOT CONSTITUTE PART PERFORMANCE OR ACCEPTANCE OF CONTRACT.

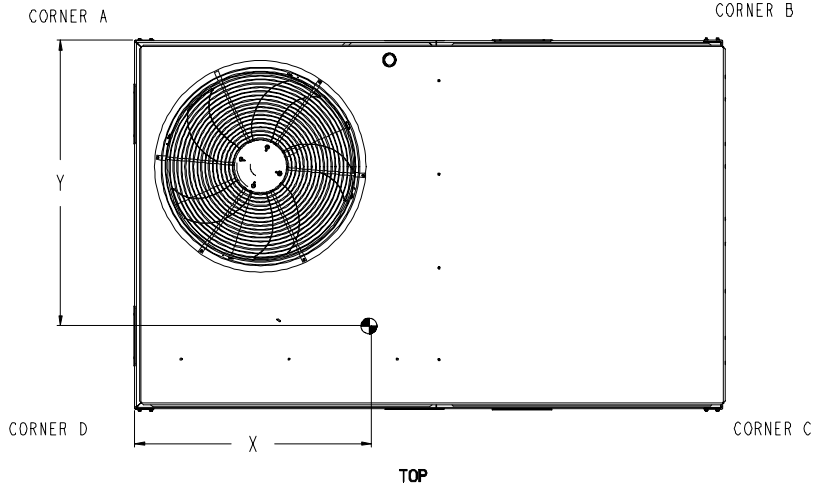

TOP

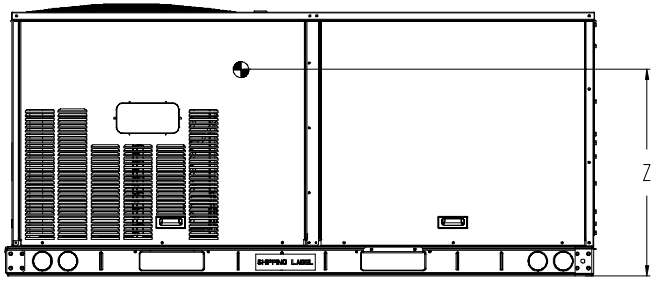

FRONT

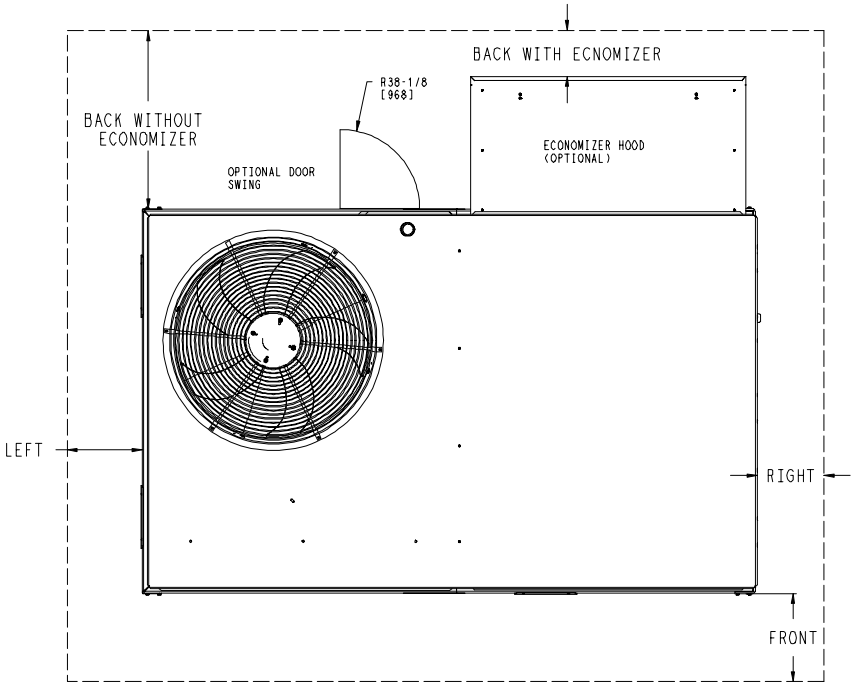

NOTE:

1. FOR ALL MINIMUM CLEARANCES LOCAL CODES OR JURISDICTIONS MAY PREVAIL.

	CLEARANCE		
	SERVICE WITH:	SERVICE WITH:	OPERATING
SURFACE	CONDUCTIVE BARRIER	NONCONDUCTIVE BARRIER	CLEARANCE
FRONT	48 [1219mm]	36 [914mm]	18 [457mm]
LEFT	48 [1219mm]	42 [1067mm]	18 [457mm]
BACK W/O ECON	48 [1219mm]	42 [1067mm]	18 [457mm]
BACK W/ECON	36 [914mm]	36 [914mm]	18 [457mm]
RIGHT	36 [914mm]	36 [914mm]	18 [457mm]
TOP	72 [1829mm]	72 [1829mm]	72 [1829mm]

ITC CLASSIFICATION	SHEET	DATE	SUPERCEDES			REV
U.S. ECCN:NSR	2 OF 3	9/9/24	9/15/23	50GEQ 04-06 SINGLE PACKAGE HEAT PUMP	48TC006647	A

Certified Drawing for ID 3

Project: Climatec - City of Esc - Fire Station 1
Prepared By: Shawn Harlan

04/12/2025
07:47AM

Carrier | THIS DOCUMENT IS THE PROPERTY OF CARRIER CORPORATION AND IS DELIVERED UPON THE EXPRESS CONDITION THAT THE CONTENTS WILL NOT BE DISCLOSED OR USED WITHOUT CARRIER CORPORATION'S WRITTEN CONSENT. | SUBMISSION OF THESE DRAWINGS OR DOCUMENTS DOES NOT CONSTITUTE PART PERFORMANCE OR ACCEPTANCE OF CONTRACT.

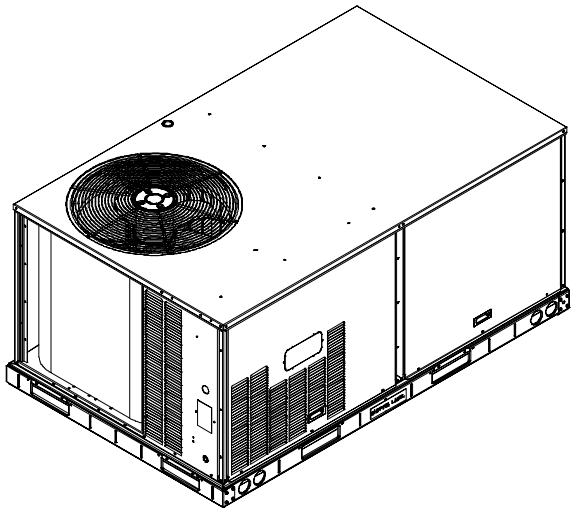

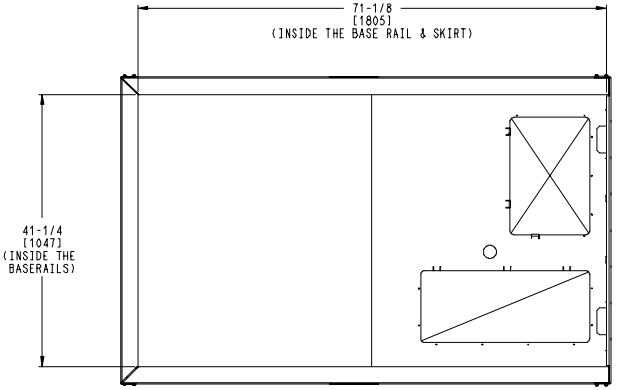

INSIDE BASERAIL DIMENSIONS
BOTTOM

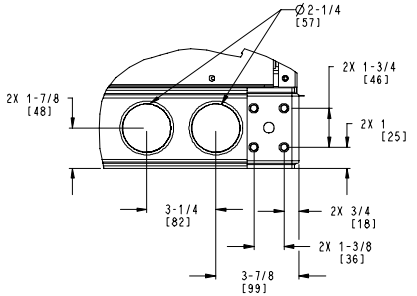

DETAIL **C**
TYP 4 PLCS

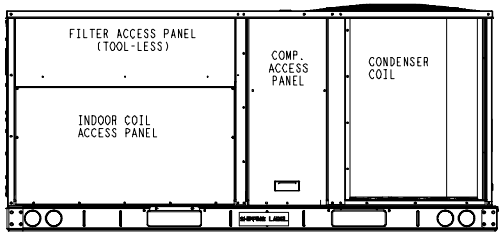

BACK

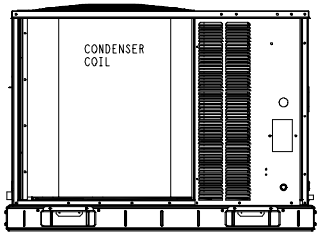

LEFT

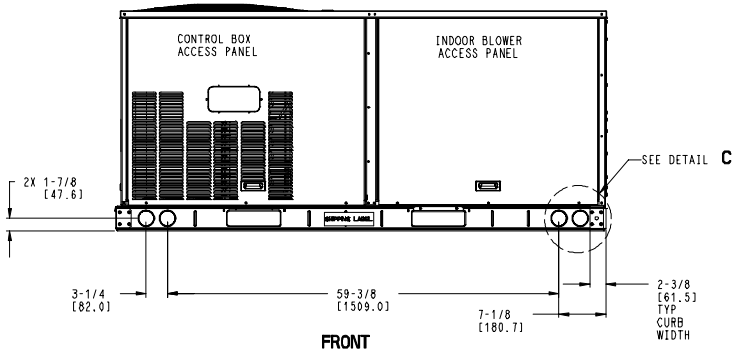

FRONT

ITC CLASSIFICATION	SHEET	DATE	SUPERCEDES			REV
U.S. ECCN:NSR	3 OF 3	9/9/24	9/15/23	50GEQ 04-06 SINGLE PACKAGE HEAT PUMP	48TC006647	A

Performance Summary For ID 3

Project: Climatec - City of Esc - Fire Station 1 04/12/2025
Prepared By: Shawn Harlan 07:47AM

Part Number:50GEQM06A2M5-0A0A0

Refrigerant:	**R-454B**	
ARI SEER:	**17.00**	
ARI SEER2:	**16.00**	
Application EER (Rooftop Unit only):	**11.92**	

Base Unit Dimensions

Unit Length:	**74.4**	in
Unit Width:	**46.6**	in
Unit Height:	**41.4**	in

Operating Weight

Base Unit Weight:	**596**	lb
Al/Cu - Al/Cu - Louvered Hail Guards:	**17**	lb
Total Operating Weight:	**613**	lb

Unit

Unit Voltage-Phase-Hertz:	**208-3-60**	
Air Discharge:	**Horizontal**	
Fan Drive Type:	**Direct Drive**	
Actual Airflow:	**2000**	CFM
Site Altitude:	**0**	ft

Cooling Performance

Condenser Entering Air DB:	**95.0**	F
Evaporator Entering Air DB:	**80.0**	F
Evaporator Entering Air WB:	**67.0**	F
Entering Air Enthalpy:	**31.44**	BTU/lb
Evaporator Leaving Air DB:	**57.3**	F
Evaporator Leaving Air WB:	**57.1**	F
Evaporator Leaving Air Enthalpy:	**24.49**	BTU/lb
Unit Discharge Air DB:	**58.4**	F
Unit Discharge Air WB:	**57.6**	F
Unit Discharge Air Enthalpy:	**24.76**	BTU/lb
Gross Cooling Capacity:	**62.53**	MBH
Net Cooling Capacity:	**60.07**	MBH
Gross Sensible Capacity:	**49.01**	MBH
Net Sensible Capacity:	**46.55**	MBH
Compressor Power Input:	**4.02**	kW
Coil Bypass Factor:	**0.014**	

Heating Performance

Outdoor Ambient Temperature:	**47.0**	F
Entering Air Indoor Coil DB:	**70.0**	F
Leaving Air Indoor Coil DB:	**95.2**	F
Total Heating Capacity:	**54.50**	MBH
Integrated Heating Capacity:	**54.50**	MBH
Heating Power Input:	**4.20**	kW
High Temperature COP:	**3.80**	
Low Temperature COP:	**2.50**	
HSPF:	**7.2**	
High Temperature COP2:	**3.80**	
Low Temperature COP2:	**2.50**	
HSPF2:	**7.2**	

Supply Fan

External Static Pressure:	**1.00**	in wg
Fan RPM:	**1995**	
Fan Power:	**0.85**	BHP

Performance Summary For ID 3

Project: Climatec - City of Esc - Fire Station 1 04/12/2025
Prepared By: Shawn Harlan 07:47AM

NOTE: **Selected IFM RPM Range: 1197 - 2390**

Selection includes construction throwaway filter into the base fan curve. This filter is not MERV Rated.

Electrical Data

Voltage Range:	**187 - 253**
Compressor #1 RLA:	**15.4**
Compressor #1 LRA:	**150**
Indoor Fan Motor Type:	**MED**
Indoor Fan Motor FLA (Total):	**9.2**
Power Supply MCA:	**30**
Power Supply MOCP (Fuse or HACR):	**45**
Disconnect Size FLA:	**30**
Disconnect Size LRA:	**166**
Electrical Convenience Outlet:	**None**
Outdoor Fan [Qty / FLA (ea)]:	**1 / 1.3**

Control Panel SCCR: 5kA RMS at Rated Symmetrical Voltage

Acoustics

Sound Power Levels, db re 10E-12 Watts

	Discharge	Inlet	Outdoor
63 Hz	91.7	90.2	85.6
125 Hz	82.8	79.0	84.7
250 Hz	76.9	72.0	80.5
500 Hz	73.4	65.7	76.0
1000 Hz	70.0	67.9	72.4
2000 Hz	67.1	58.7	68.0
4000 Hz	63.8	52.5	62.8
8000 Hz	60.1	46.3	59.3
A-Weighted	76.6	72.0	79.0

Advanced Acoustics

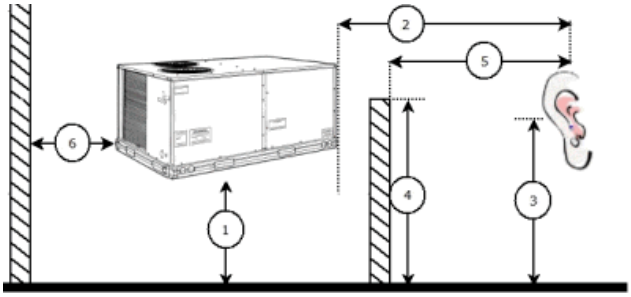

Advanced Accoustics Parameters

1. Unit height above ground:	**30.0**	ft
2. Horizontal distance from unit to receiver:	**50.0**	ft
3. Receiver height above ground:	**5.7**	ft
4. Height of obstruction:	**0.0**	ft
5. Horizontal distance from obstruction to receiver:	**0.0**	ft
6. Horizontal distance from unit to obstruction:	**0.0**	ft

Detailed Acoustics Information

Performance Summary For ID 3

Project: Climatec - City of Esc - Fire Station 1 04/12/2025
Prepared By: Shawn Harlan 07:47AM

Octave Band Center Freq. Hz	63	125	250	500	1k	2k	4k	8k	Overall
A	85.6	84.7	80.5	76.0	72.4	68.0	62.8	59.3	89.2 Lw
B	59.4	68.6	71.9	72.8	72.4	69.2	63.8	58.2	78.5 LwA
C	53.2	52.3	48.1	43.6	40.0	35.6	30.4	26.9	56.8 Lp
D	27.0	36.2	39.5	40.4	40.0	36.8	31.4	25.8	46.1 LpA

Legend
A Sound Power Levels at Unit's Acoustic Center, Lw
B A-Weighted Sound Power Levels at Unit's Acoustic Center, LwA
C Sound Pressure Levels at Specific Distance from Unit, Lp
D A-Weighted Sound Pressure Levels at Specific Distance from Unit, LpA

Calculation methods used in this program are patterned after the ASHRAE Guide; other ASHRAE Publications and the AHRI Acoustical Standards. While a very significant effort has been made to insure the technical accuracy of this program, it is assumed that the user is knowledgeable in the art of system sound estimation and is aware of the tolerances involved in real world acoustical estimation. This program makes certain assumptions as to the dominant sound sources and sound paths which may not always be appropriate to the real system being estimated. Because of this, no assurances can be offered that this software will always generate an accurate sound prediction from user supplied input data. If in doubt about the estimation of expected sound levels in a space, an Acoustical Engineer or a person with sound prediction expertise should be consulted.

Fan Curve

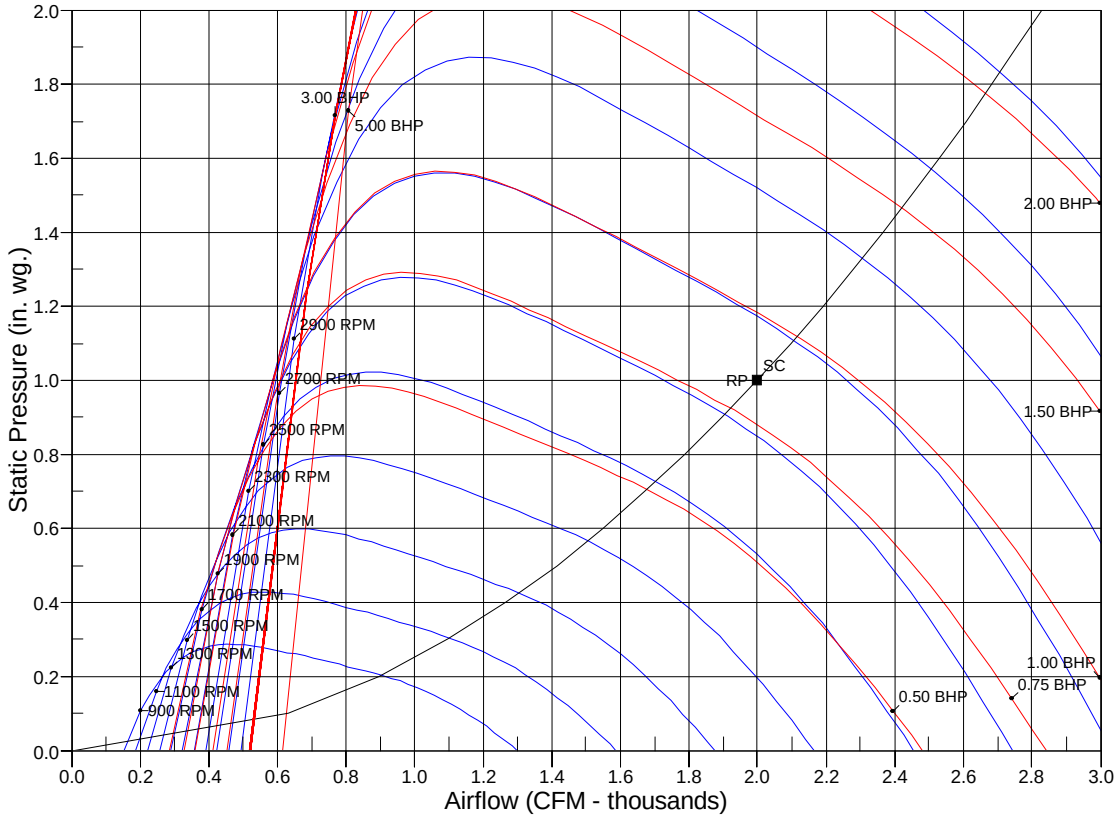

RPM = 1995 BHP = 0.85 Maximum RPM = 2836 Maximum BHP = 3.00
SC - System Curve RP - Rated Point

ID 4

Tag Cover Sheet
Unit Report
Certified Drawing
Performance Report

Unit Report For ID 4

Project: Climatec - City of Esc - Fire Station 1 04/12/2025
Prepared By: Shawn Harlan 07:47AM

Unit Parameters

Unit Model: **50FEQM07A2M5-0A0A0**
Unit Size: **07 (6 Tons)**
Volts-Phase-Hertz: **208-3-60**
Heating Type: **Heat Pump**
Refrigerant: **R-454B**
Heat Control: **Two Stage Cooling, Single Circuit (07)**
Duct Cfg: **Horizontal Supply / Horizontal Return**

Dimensions (ft. in.) & Weight (lb.) ***

Unit Length: **6' 2.375"**
Unit Width: **3' 10.625"**
Unit Height: **3' 5.375"**
Total Operating Weight: **606** lb

*** Weights and Dimensions are approximate. Weight does not include unit packaging. Approximate dimensions are provided primarily for shipping purposes. For exact dimensions and weights, refer to appropriate product data catalog.

Lines and Filters

Return Air Filter Type: **Throwaway**
Return Air Filter Quantity: **4**
Return Air Filter Size: **16 x 16 x 2**

Selection includes construction throwaway filter into the base fan curve.

Unit Configuration

Standard/Medium Static - EcoBlue Vane Axial Fan
Al/Cu - Al/Cu - Louvered Hail Guards
Standard Electromechanical Controls (can be used with field installed economizers and dampers)
Standard Packaging

Warranty Information

5-Year compressor parts (STD.)
1-Year parts (STD.)

No optional warranties were selected.

NOTE: Please see Warranty Catalog 500-089 for explanation of policies and ordering methods.

Ordering Information

Part Number	Description	Quantity
50FEQM07A2M5-0A0A0	Rooftop Unit	1

Certified Drawing for ID 4

Project: Climatec - City of Esc - Fire Station 1
Prepared By: Shawn Harlan

04/12/2025
07:47AM

NOTES:

1. DIMENSIONS ARE IN INCHES. DIMENSIONS IN [ ] ARE IN MILLIMETERS.
2. CENTER OF GRAVITY
3. DIRECTION OF AIR FLOW
4. ALL VIEW DRAWN USING 3RD ANGLE

UNIT	J	K
50FEQ*04	33 3/8 [847]	18 5/8 [472]
50FEQ*05	33 3/8 [847]	14 7/8 [377]
50FEQ*06	41 3/8 [1051]	14 7/8 [377]
50FEQ*07	41 3/8 [1051]	14 7/8 [377]

Carrier
THIS DOCUMENT IS THE PROPERTY OF CARRIER CORPORATION AND IS DELIVERED UPON THE EXPRESS CONDITION THAT THE CONTENTS WILL NOT BE DISCLOSED OR USED WITHOUT CARRIER CORPORATION'S WRITTEN CONSENT.
SUBMISSION OF THESE DRAWINGS OR DOCUMENTS DOES NOT CONSTITUTE PART PERFORMANCE OR ACCEPTANCE OF CONTRACT.

	CONNECTION SIZES
A	1 3/8" [35] DIA FIELD POWER SUPPLY HOLE
B	2" [51] DIA POWER SUPPLY KNOCKOUT
C	1 3/4" [44] DIA GAUGE ACCESS PLUG
D	7/8" [22] DIA FIELD CONTROL WIRING HOLE
E	3/4"-14 NPT CONDENSATE DRAIN
G	2 1/2 " [64] DIA POWER SUPPLY KNOCK-OUT

THRU-THE-BASE CHART
THESE HOLES REQUIRED FOR USE CRBTMPWR008A00, 009A00

	THREADED CONDUIT SIZE	WIRE USE	REQ'D HOLE SIZES (MAX.)
W	1/2"	115V	7/8" [22.2]
X	1/2"	24V	7/8" [22.2]
Y *	3/4"	POWER	1 1/8" [28.6]
Z**	(009A00) 1/2" FPT	GAS	1 1/8" [28.6]
	FOR "THRU-THE-BASEPAN" FACTORY OPTION, FITTINGS FOR ONLY X,Y, & Z ARE PROVIDED		
*	SELECT EITHER 3/4" OR 1/2" FOR POWER, DEPENDING ON WIRE SIZE		
**	(008A00) PROVIDES 3/4" FPT THRU CURB FLANGE & FITTING.		

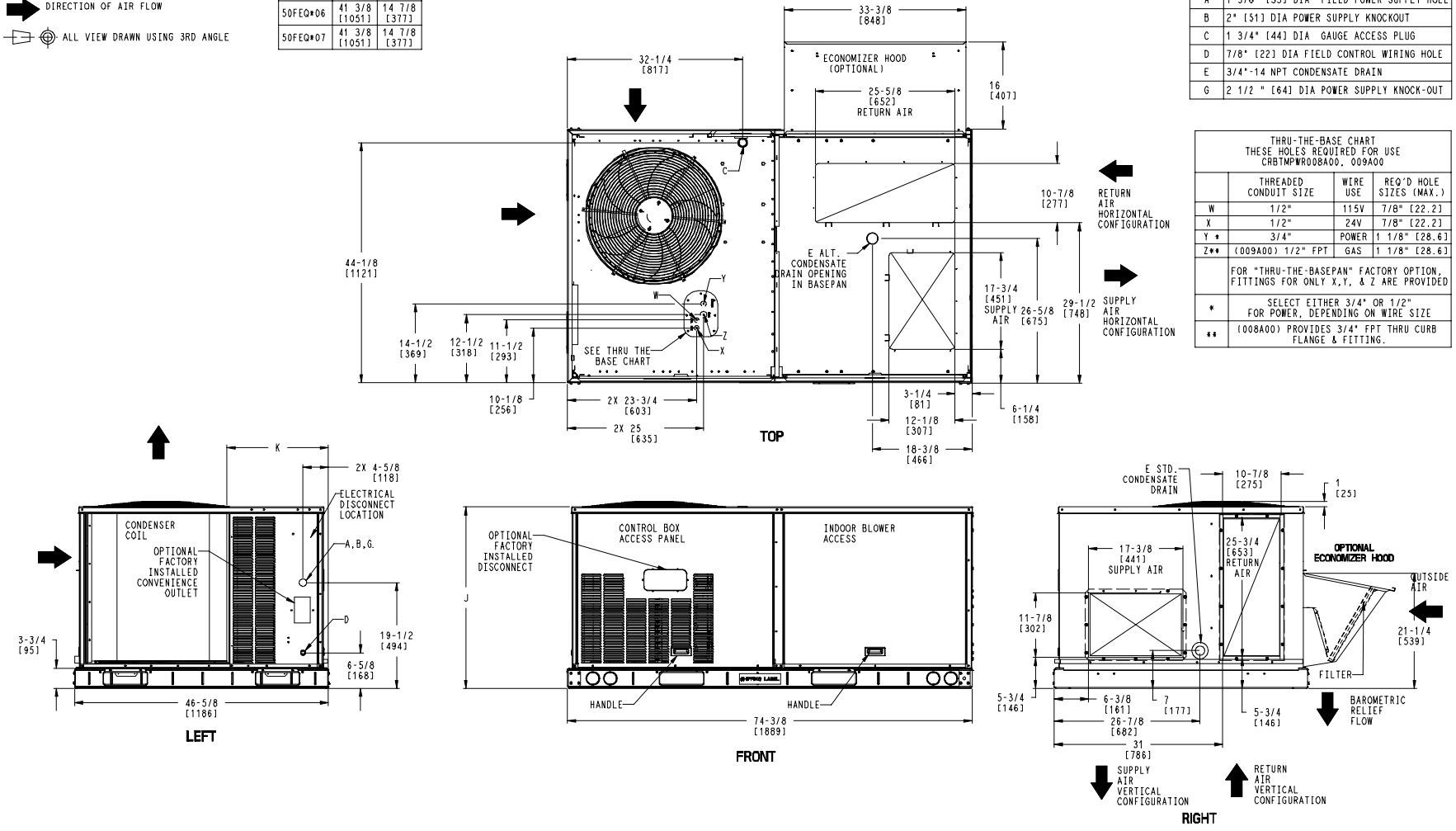

ITC CLASSIFICATION	SHEET	DATE	SUPERCEDES			REV
U.S. ECCN:NSR	1 OF 3	08/30/24	01/17/24	50FEQ 04-07 SINGLE PACKAGE HEAT PUMP	48TC007000	A

Performance Summary For ID 4

Project: Climatec - City of Esc - Fire Station 1
Prepared By: Shawn Harlan

04/12/2025
07:47AM

UNIT	STD. UNIT WEIGHT*		CORNER WEIGHT (A)		CORNER WEIGHT (B)		CORNER WEIGHT (C)		CORNER WEIGHT (D)		C.G.		HEIGHT
	LBS.	KG.	LBS.	KG.	LBS.	KG.	LBS.	KG.	LBS.	KG.	X	Y	Z
50FEQ*04	476	216	128	58	120	54	110	50	118	54	36 [914]	22 3/8 [568]	16 1/8 [410]
50FEQ*05	473	215	127	58	119	54	110	50	117	53	36 [914]	22 3/8 [568]	16 1/8 [410]
50FEQ*06	584	265	158	72	145	66	134	61	147	67	35 1/2 [902]	22 1/2 [572]	16 1/2 [419]
50FEQ*07	589	267	161	73	146	66	134	61	147	67	35 3/8 [898]	22 5/16 [557]	16 1/2 [419]

* STANDARD UNIT WEIGHT IS WITHOUT ELECTRIC HEAT AND WITHOUT PACKAGING.
FOR OTHER OPTIONS AND ACCESSORIES, REFER TO THE PRODUCT DATA CATALOG.

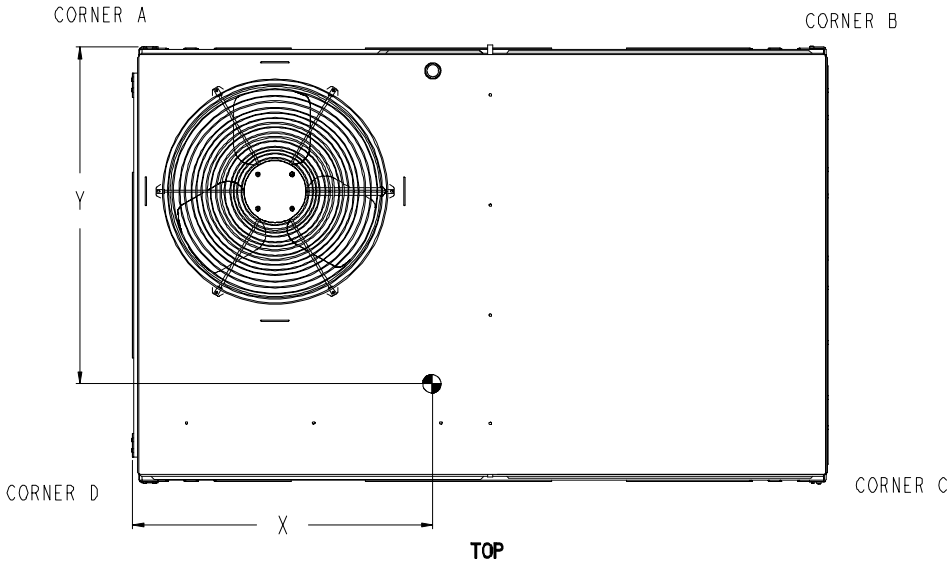

TOP

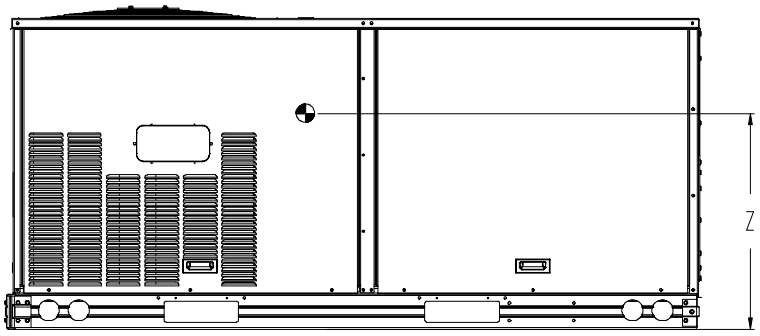

FRONT

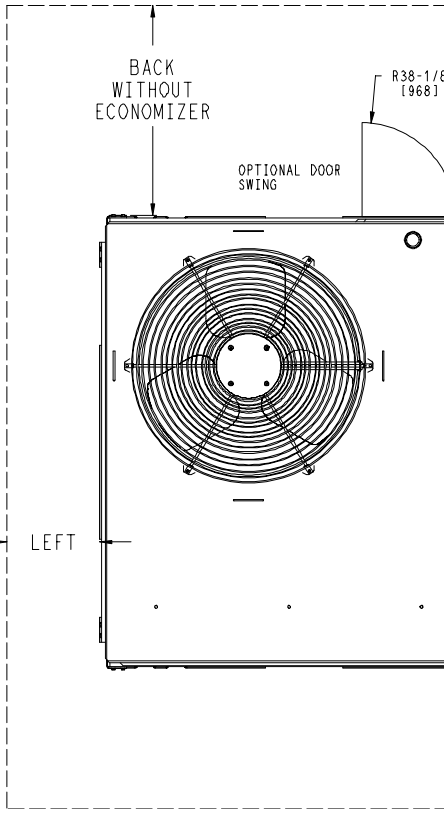

NOTE:
1. FOR ALL MINIMUM C

SURFACE
FRONT
LEFT
BACK W/O ECON
BACK W/ECON
RIGHT
TOP

ITC CLASSIFICATION	SHEET	DATE	SUPERCEDES	
U.S. ECCN:NSR	2 OF 3	08/30/24	01/17//24	50F

Part Number:50FEQM07A2M5-0A0A0

Refrigerant: **R-454B**
ARI EER: **11.20**
Application EER (Rooftop Unit only): **10.99**
IEER: **15.0**

Base Unit Dimensions
Unit Length: **74.4** in
Unit Width: **46.6** in

Performance Summary For ID 4

Project: Climatec - City of Esc - Fire Station 1 04/12/2025
Prepared By: Shawn Harlan 07:47AM

Unit Height:	**41.4**	in

Operating Weight

Base Unit Weight:	**589**	lb
Al/Cu - Al/Cu - Louvered Hail Guards:	**17**	lb
Total Operating Weight:	**606**	lb

Unit

Unit Voltage-Phase-Hertz:	**208-3-60**	
Air Discharge:	**Horizontal**	
Fan Drive Type:	**Vane Axial**	
Actual Airflow:	**2400**	CFM
Site Altitude:	**0**	ft

Cooling Performance

Condenser Entering Air DB:	**95.0**	F
Evaporator Entering Air DB:	**80.0**	F
Evaporator Entering Air WB:	**67.0**	F
Entering Air Enthalpy:	**31.44**	BTU/lb
Evaporator Leaving Air DB:	**57.9**	F
Evaporator Leaving Air WB:	**57.4**	F
Evaporator Leaving Air Enthalpy:	**24.67**	BTU/lb
Unit Discharge Air DB:	**59.1**	F
Unit Discharge Air WB:	**57.9**	F
Unit Discharge Air Enthalpy:	**24.96**	BTU/lb
Gross Cooling Capacity:	**73.11**	MBH
Net Cooling Capacity:	**70.01**	MBH
Gross Sensible Capacity:	**57.24**	MBH
Net Sensible Capacity:	**54.14**	MBH
Compressor Power Input:	**5.16**	kW
Coil Bypass Factor:	**0.018**	

Heating Performance

Outdoor Ambient Temperature:	**47.0**	F
Entering Air Indoor Coil DB:	**70.0**	F
Leaving Air Indoor Coil DB:	**96.9**	F
Total Heating Capacity:	**69.80**	MBH
Integrated Heating Capacity:	**69.80**	MBH
Heating Power Input:	**5.10**	kW
High Temperature COP:	**3.40**	
Low Temperature COP:	**2.25**	

Supply Fan

External Static Pressure:	**1.00**	in wg
Fan RPM:	**2163**	
Fan Power:	**1.07**	BHP
NOTE:	**Selected IFM RPM Range: 1378 - 2530**	

Selection includes construction throwaway filter into the base fan curve. This filter is not MERV Rated.

Electrical Data

Voltage Range:	**187 - 253**
Compressor #1 RLA:	**21**
Compressor #1 LRA:	**162**
Indoor Fan Motor Type:	**MED**
Indoor Fan Motor FLA (Total):	**5.5**
Power Supply MCA:	**34**
Power Supply MOCP (Fuse or HACR):	**50**
Disconnect Size FLA:	**32**
Disconnect Size LRA:	**174**
Electrical Convenience Outlet:	**None**
Outdoor Fan [Qty / FLA (ea)]:	**1 / 1.5**

Control Panel SCCR: 5kA RMS at Rated Symmetrical Voltage

Performance Summary For ID 4

Project: Climatec - City of Esc - Fire Station 1 04/12/2025
Prepared By: Shawn Harlan 07:47AM

Acoustics

Sound Power Levels, db re 10E-12 Watts

	Discharge	Inlet	Outdoor
63 Hz	92.0	90.7	85.6
125 Hz	83.4	80.5	84.7
250 Hz	77.7	72.7	80.5
500 Hz	75.4	67.7	76.0
1000 Hz	72.2	69.7	72.4
2000 Hz	69.8	60.7	68.0
4000 Hz	65.6	54.1	62.8
8000 Hz	61.2	48.0	59.3
A-Weighted	78.4	73.5	79.0

Advanced Acoustics

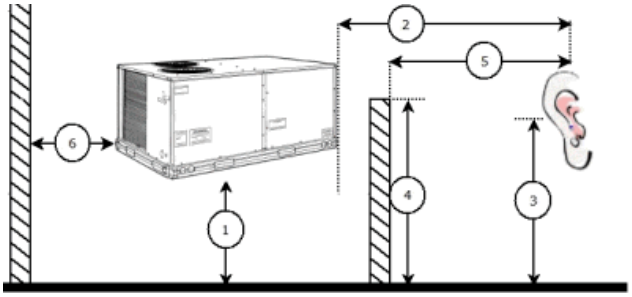

Advanced Accoustics Parameters

1. Unit height above ground: **30.0** ft
2. Horizontal distance from unit to receiver: **50.0** ft
3. Receiver height above ground: **5.7** ft
4. Height of obstruction: **0.0** ft
5. Horizontal distance from obstruction to receiver: **0.0** ft
6. Horizontal distance from unit to obstruction: **0.0** ft

Detailed Acoustics Information

Octave Band Center Freq. Hz	63	125	250	500	1k	2k	4k	8k	Overall
A	85.6	84.7	80.5	76.0	72.4	68.0	62.8	59.3	89.2 Lw
B	59.4	68.6	71.9	72.8	72.4	69.2	63.8	58.2	78.5 LwA
C	53.2	52.3	48.1	43.6	40.0	35.6	30.4	26.9	56.8 Lp
D	27.0	36.2	39.5	40.4	40.0	36.8	31.4	25.8	46.1 LpA

Legend
A Sound Power Levels at Unit's Acoustic Center, Lw
B A-Weighted Sound Power Levels at Unit's Acoustic Center, LwA
C Sound Pressure Levels at Specific Distance from Unit, Lp
D A-Weighted Sound Pressure Levels at Specific Distance from Unit, LpA

Calculation methods used in this program are patterned after the ASHRAE Guide; other ASHRAE Publications and the AHRI Acoustical Standards. While a very significant effort has been made to insure the technical accuracy of this program, it is assumed that the user is knowledgeable in the art of system sound estimation and is aware of the tolerances involved in real world acoustical

Performance Summary For ID 4

Project: Climatec - City of Esc - Fire Station 1 04/12/2025
Prepared By: Shawn Harlan 07:47AM

estimation. This program makes certain assumptions as to the dominant sound sources and sound paths which may not always be appropriate to the real system being estimated. Because of this, no assurances can be offered that this software will always generate an accurate sound prediction from user supplied input data. If in doubt about the estimation of expected sound levels in a space, an Acoustical Engineer or a person with sound prediction expertise should be consulted.

Fan Curve

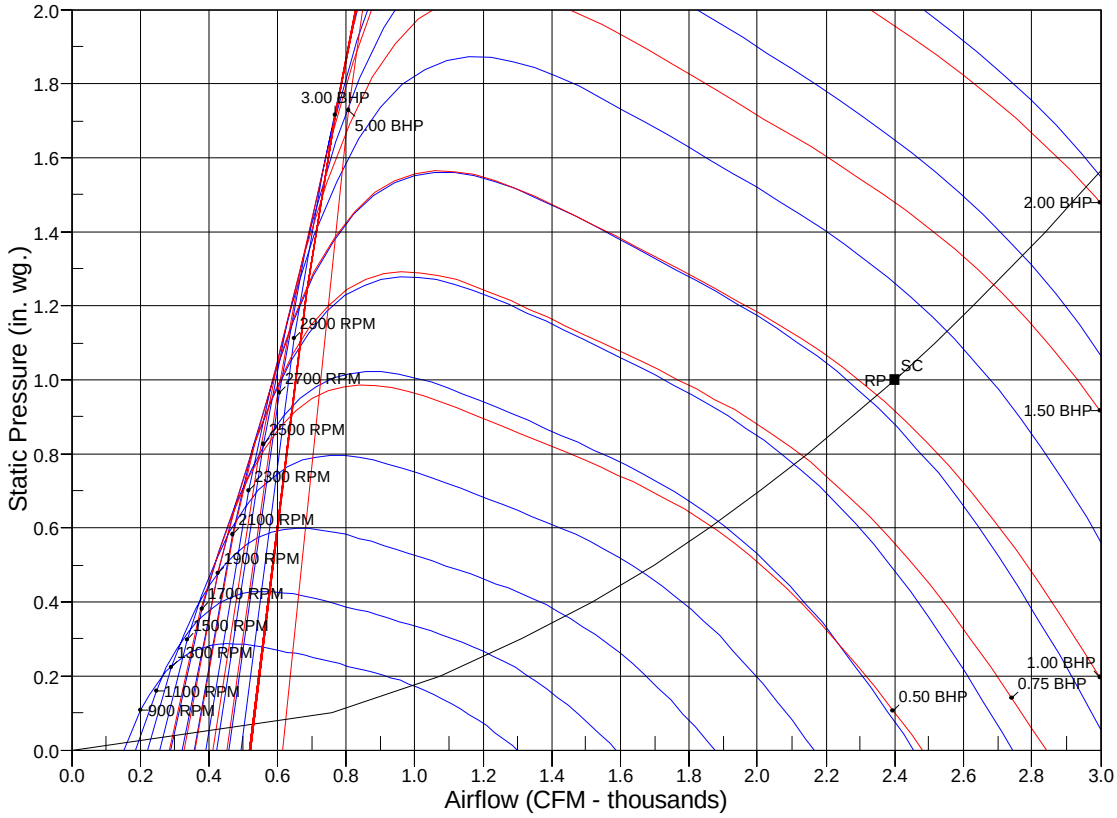

RPM = 2163 BHP = 1.07 Maximum RPM = 2836 Maximum BHP = 3.00
SC - System Curve RP - Rated Point

ID 5

Tag Cover Sheet
Unit Report
Certified Drawing
Performance Report

Unit Report For ID 5

Project: Climatec - City of Esc - Fire Station 1 04/12/2025
Prepared By: Shawn Harlan 07:47AM

Unit Parameters

Unit Model: **50GEQM05A2M5-0A0A0**
Unit Size: **05 (4 Tons)**
Volts-Phase-Hertz: **208-3-60**
Heating Type: **Heat Pump**
Refrigerant: **R-454B**
Heat Control: **Two Stage Cooling, Single Circuit**
Duct Cfg: **Horizontal Supply / Horizontal Return**

Dimensions (ft. in.) & Weight (lb.) ***

Unit Length: **6' 2.375"**
Unit Width: **3' 10.625"**
Unit Height: **3' 5.375"**
Total Operating Weight: **607** lb

*** Weights and Dimensions are approximate. Weight does not include unit packaging. Approximate dimensions are provided primarily for shipping purposes. For exact dimensions and weights, refer to appropriate product data catalog.

Lines and Filters

Return Air Filter Type: **Throwaway**
Return Air Filter Quantity: **4**
Return Air Filter Size: **16 x 16 x 2**

Selection includes construction throwaway filter into the base fan curve.

Unit Configuration

Standard/Medium Static - EcoBlue Vane Axial Fan
Al/Cu - Al/Cu - Louvered Hail Guards
Standard Electromechanical Controls (can be used with field installed economizers and dampers)
Standard

Warranty Information

5-Year compressor parts (STD.)
1-Year parts (STD.)

No optional warranties were selected.

NOTE: Please see Warranty Catalog 500-089 for explanation of policies and ordering methods.

Ordering Information

Part Number	Description	Quantity
50GEQM05A2M5-0A0A0	Rooftop Unit	1

Certified Drawing for ID 5

Project: Climatec - City of Esc - Fire Station 1
Prepared By: Shawn Harlan

04/12/2025
07:47AM

NOTES:

1. DIMENSIONS ARE IN INCHES, DIMENSIONS IN [ ] ARE IN MILLIMETERS.
2. CENTER OF GRAVITY
3. DIRECTION OF AIR FLOW
4. ALL VIEW DRAWN USING 3RD ANGLE

UNIT	J	K
50GEQ*04	33 3/8 [847]	18 5/8 [472]
50GEQ*05	41 3/8 [1051]	14 7/8 [378]
50GEQ*06	41 3/8 [1051]	14 7/8 [378]

Carrier
THIS DOCUMENT IS THE PROPERTY OF CARRIER CORPORATION AND IS DELIVERED UPON THE EXPRESS CONDITION THAT THE CONTENTS WILL NOT BE DISCLOSED OR USED WITHOUT CARRIER CORPORATION'S WRITTEN CONSENT.
SUBMISSION OF THESE DRAWINGS OR DOCUMENTS DOES NOT CONSTITUTE PART PERFORMANCE OR ACCEPTANCE OF CONTRACT.

	CONNECTION SIZES
A	1 3/8" [35] DIA FIELD POWER SUPPLY HOLE
B	2" [51] DIA POWER SUPPLY KNOCKOUT
C	1 3/4" [44] DIA GAUGE ACCESS PLUG
D	7/8" [22] DIA FIELD CONTROL WIRING HOLE
E	3/4"-14 NPT CONDENSATE DRAIN
G	2 1/2 " [64] DIA POWER SUPPLY KNOCK-OUT

THRU-THE-BASE CHART
THESE HOLES REQUIRED FOR USE CRBTMPWR008A00, 009A00

	THREADED CONDUIT SIZE	WIRE USE	REQ'D HOLE SIZES (MAX.)
W	1/2"	115V	7/8" [22.2]
X	1/2"	24V	7/8" [22.2]
Y *	3/4"	POWER	1 1/8" [28.6]
Z**	(009A00) 1/2" FPT	GAS	1 1/8" [28.6]
	FOR "THRU-THE-BASEPAN" FACTORY OPTION, FITTINGS FOR ONLY X,Y, & Z ARE PROVIDED		
*	SELECT EITHER 3/4" OR 1/2" FOR POWER, DEPENDING ON WIRE SIZE		
**	(008A00) PROVIDES 3/4" FPT THRU CURB FLANGE & FITTING.		

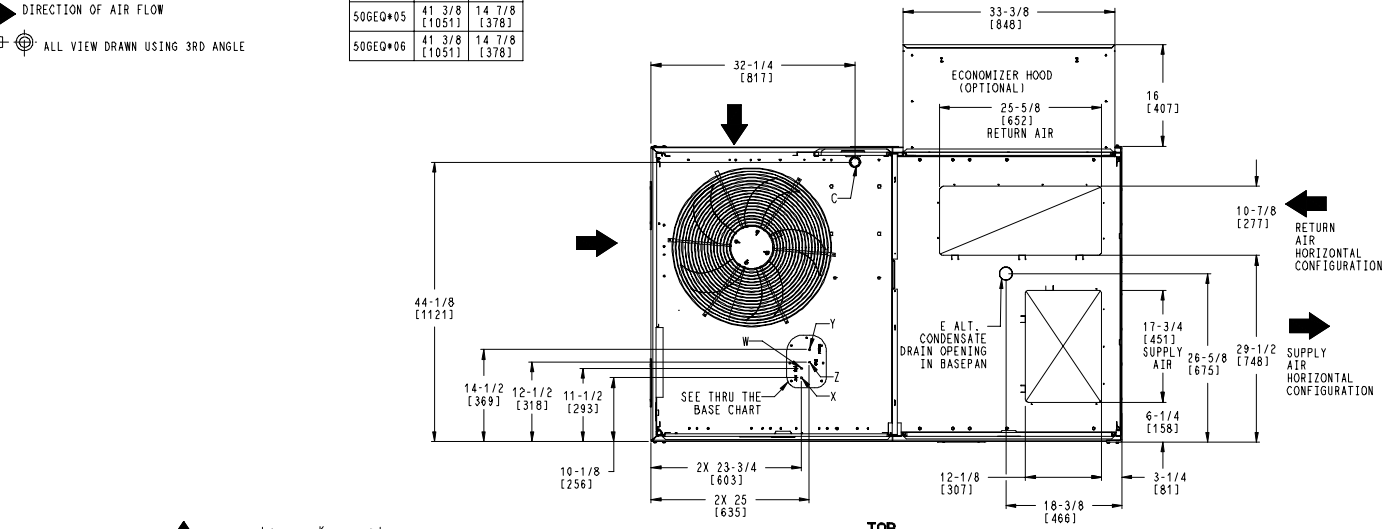

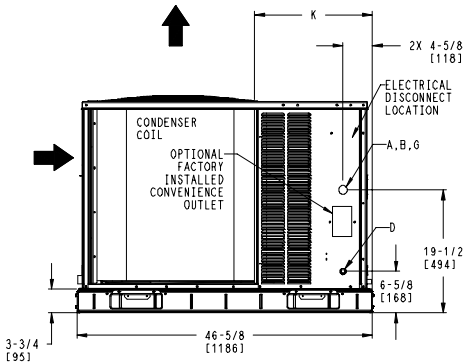

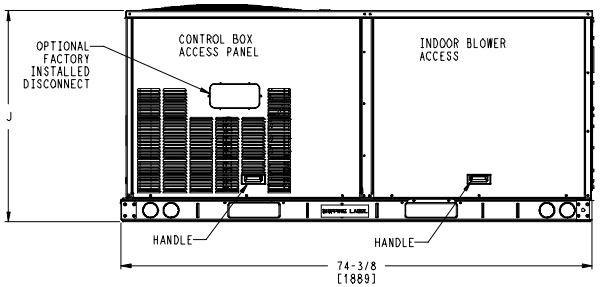

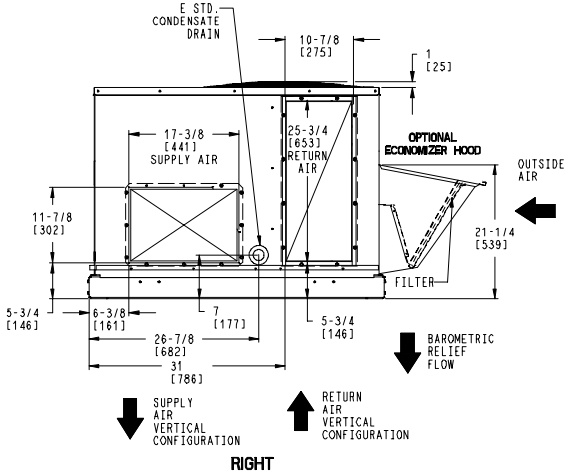

ITC CLASSIFICATION	SHEET	DATE	SUPERCEDES			REV
U.S. ECCN:NSR	1 OF 3	9/9/24	9/15/23	50GEQ 04-06 SINGLE PACKAGE HEAT PUMP	48TC006647	A

Certified Drawing for ID 5

Project: Climatec - City of Esc - Fire Station 1
Prepared By: Shawn Harlan

04/12/2025
07:47AM

UNIT	STD. UNIT WEIGHT *		CORNER WEIGHT (A)		CORNER WEIGHT (B)		CORNER WEIGHT (C)		CORNER WEIGHT (D)		C.G.		HEIGHT
	LBS.	KG.	LBS.	KG.	LBS.	KG.	LBS.	KG.	LBS.	KG.	X	Y	Z
50GEQ*04	475	215	128	58	120	54	110	50	117	53	36 [914]	22 3/8 [568]	16 1/8 [410]
50GEQ*05	594	269	163	74	148	67	135	61	149	68	35 3/8 [898]	22 5/16 [557]	16 1/2 [419]
50GEQ*06	596	270	163	74	148	67	135	61	149	68	35 3/8 [898]	22 5/16 [557]	16 1/2 [419]

*- STANDARD UNIT WEIGHT IS WITHOUT ELECTRIC HEAT AND WITHOUT PACKAGING.
FOR OTHER OPTIONS AND ACCESSORIES REFER TO THE PRODUCT DATA CATALOG.

Carrier
THIS DOCUMENT IS THE PROPERTY OF CARRIER CORPORATION AND IS DELIVERED UPON THE EXPRESS CONDITION THAT THE CONTENTS WILL NOT BE DISCLOSED OR USED WITHOUT CARRIER CORPORATION'S WRITTEN CONSENT.
SUBMISSION OF THESE DRAWINGS OR DOCUMENTS DOES NOT CONSTITUTE PART PERFORMANCE OR ACCEPTANCE OF CONTRACT.

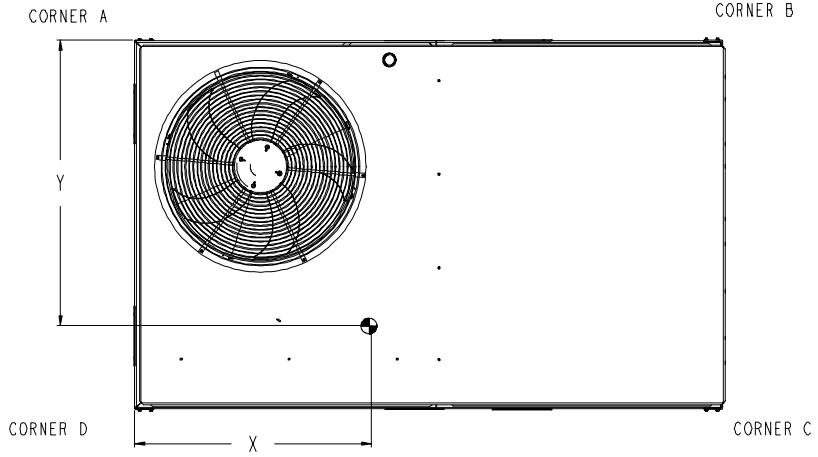

TOP

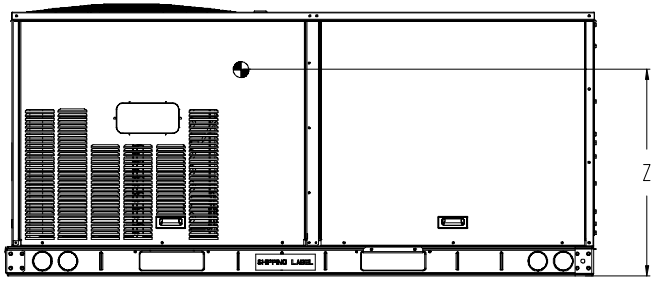

FRONT

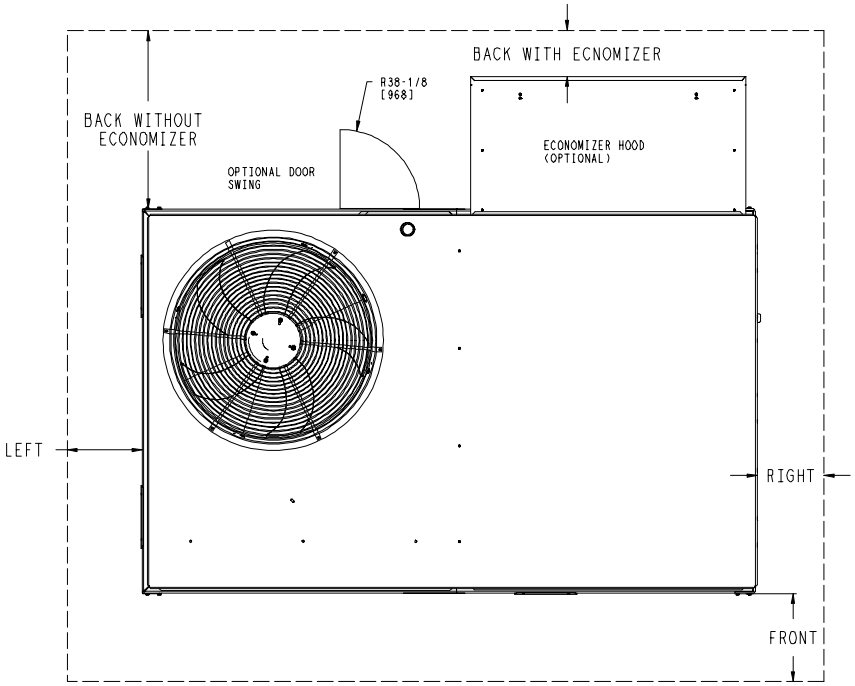

NOTE:

1. FOR ALL MINIMUM CLEARANCES LOCAL CODES OR JURISDICTIONS MAY PREVAIL.

CLEARANCE			
	SERVICE WITH:	SERVICE WITH:	OPERATING
SURFACE	CONDUCTIVE BARRIER	NONCONDUCTIVE BARRIER	CLEARANCE
FRONT	48 [1219mm]	36 [914mm]	18 [457mm]
LEFT	48 [1219mm]	42 [1067mm]	18 [457mm]
BACK W/O ECON	48 [1219mm]	42 [1067mm]	18 [457mm]
BACK W/ECON	36 [914mm]	36 [914mm]	18 [457mm]
RIGHT	36 [914mm]	36 [914mm]	18 [457mm]
TOP	72 [1829mm]	72 [1829mm]	72 [1829mm]

ITC CLASSIFICATION	SHEET	DATE	SUPERCEDES			REV
U.S. ECCN:NSR	2 OF 3	9/9/24	9/15/23	50GEQ 04-06 SINGLE PACKAGE HEAT PUMP	48TC006647	A

Certified Drawing for ID 5

Project: Climatec - City of Esc - Fire Station 1
Prepared By: Shawn Harlan

04/12/2025
07:47AM

Carrier | THIS DOCUMENT IS THE PROPERTY OF CARRIER CORPORATION AND IS DELIVERED UPON THE EXPRESS CONDITION THAT THE CONTENTS WILL NOT BE DISCLOSED OR USED WITHOUT CARRIER CORPORATION'S WRITTEN CONSENT. | SUBMISSION OF THESE DRAWINGS OR DOCUMENTS DOES NOT CONSTITUTE PART PERFORMANCE OR ACCEPTANCE OF CONTRACT.

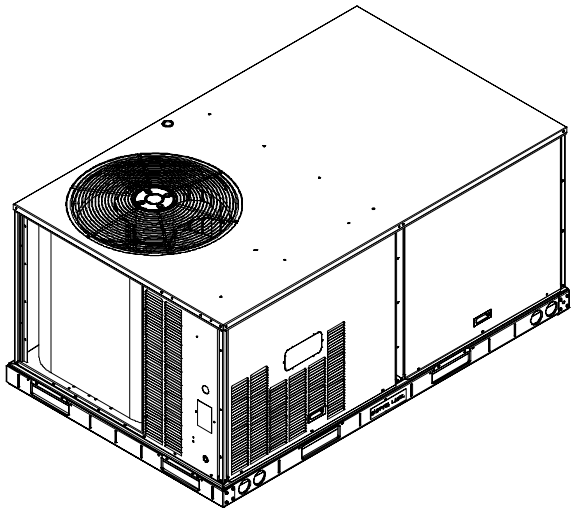

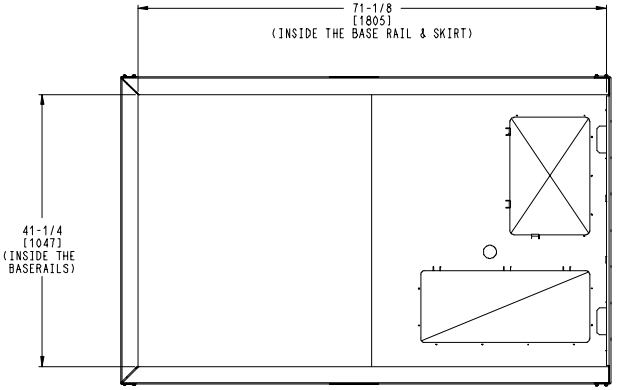

INSIDE BASERAIL DIMENSIONS
BOTTOM

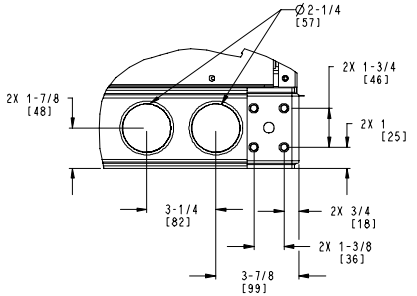

DETAIL **C**
TYP 4 PLCS

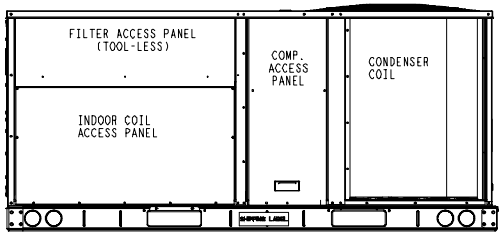

BACK

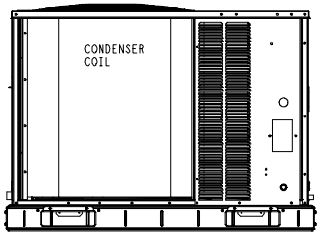

LEFT

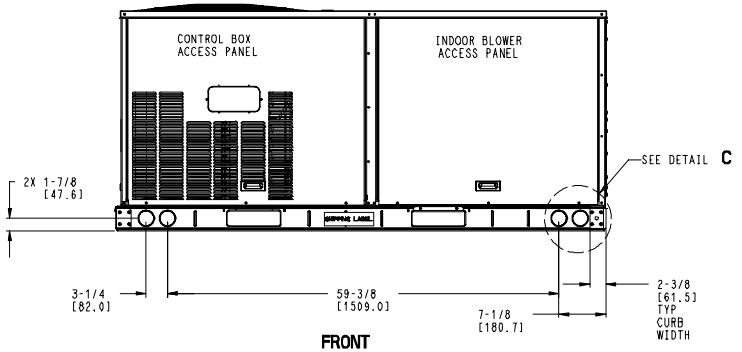

FRONT

ITC CLASSIFICATION	SHEET	DATE	SUPERCEDES			REV
U.S. ECCN:NSR	3 OF 3	9/9/24	9/15/23	50GEQ 04-06 SINGLE PACKAGE HEAT PUMP	48TC006647	A

Performance Summary For ID 5

Project: Climatec - City of Esc - Fire Station 1 04/12/2025
Prepared By: Shawn Harlan 07:47AM

Part Number:50GEQM05A2M5-0A0A0

Refrigerant:	**R-454B**	
ARI SEER:	**17.00**	
ARI SEER2:	**16.00**	
Application EER (Rooftop Unit only):	**12.19**	

Base Unit Dimensions

Unit Length:	**74.4**	in
Unit Width:	**46.6**	in
Unit Height:	**41.4**	in

Operating Weight

Base Unit Weight:	**594**	lb
Al/Cu - Al/Cu - Louvered Hail Guards:	**13**	lb
Total Operating Weight:	**607**	lb

Unit

Unit Voltage-Phase-Hertz:	**208-3-60**	
Air Discharge:	**Horizontal**	
Fan Drive Type:	**Direct Drive**	
Actual Airflow:	**1600**	CFM
Site Altitude:	**0**	ft

Cooling Performance

Condenser Entering Air DB:	**95.0**	F
Evaporator Entering Air DB:	**80.0**	F
Evaporator Entering Air WB:	**67.0**	F
Entering Air Enthalpy:	**31.44**	BTU/lb
Evaporator Leaving Air DB:	**58.4**	F
Evaporator Leaving Air WB:	**57.1**	F
Evaporator Leaving Air Enthalpy:	**24.48**	BTU/lb
Unit Discharge Air DB:	**59.5**	F
Unit Discharge Air WB:	**57.6**	F
Unit Discharge Air Enthalpy:	**24.76**	BTU/lb
Gross Cooling Capacity:	**50.11**	MBH
Net Cooling Capacity:	**48.11**	MBH
Gross Sensible Capacity:	**37.34**	MBH
Net Sensible Capacity:	**35.34**	MBH
Compressor Power Input:	**3.18**	kW
Coil Bypass Factor:	**0.000**	

Heating Performance

Outdoor Ambient Temperature:	**47.0**	F
Entering Air Indoor Coil DB:	**70.0**	F
Leaving Air Indoor Coil DB:	**95.9**	F
Total Heating Capacity:	**44.80**	MBH
Integrated Heating Capacity:	**44.80**	MBH
Heating Power Input:	**3.60**	kW
High Temperature COP:	**3.80**	
Low Temperature COP:	**2.50**	
HSPF:	**7.2**	
High Temperature COP2:	**3.80**	
Low Temperature COP2:	**2.50**	
HSPF2:	**7.2**	

Supply Fan

External Static Pressure:	**1.00**	in wg
Fan RPM:	**1856**	
Fan Power:	**0.69**	BHP

Performance Summary For ID 5

Project: Climatec - City of Esc - Fire Station 1 04/12/2025
Prepared By: Shawn Harlan 07:47AM

NOTE: **Selected IFM RPM Range: 1022 - 2170**

Selection includes construction throwaway filter into the base fan curve. This filter is not MERV Rated.

Electrical Data

Voltage Range:	**187 - 253**
Compressor #1 RLA:	**15.6**
Compressor #1 LRA:	**112**
Indoor Fan Motor Type:	**MED**
Indoor Fan Motor FLA (Total):	**7.1**
Power Supply MCA:	**28**
Power Supply MOCP (Fuse or HACR):	**40**
Disconnect Size FLA:	**28**
Disconnect Size LRA:	**125**
Electrical Convenience Outlet:	**None**
Outdoor Fan [Qty / FLA (ea)]:	**1 / 1.3**

Control Panel SCCR: 5kA RMS at Rated Symmetrical Voltage

Acoustics

Sound Power Levels, db re 10E-12 Watts

	Discharge	Inlet	Outdoor
63 Hz	92.1	89.8	85.6
125 Hz	82.9	78.0	84.7
250 Hz	76.6	71.8	80.5
500 Hz	71.7	64.1	76.0
1000 Hz	68.1	66.3	72.4
2000 Hz	64.9	57.2	68.0
4000 Hz	62.2	51.3	62.8
8000 Hz	59.2	44.9	59.3
A-Weighted	75.5	70.9	79.0

Advanced Acoustics

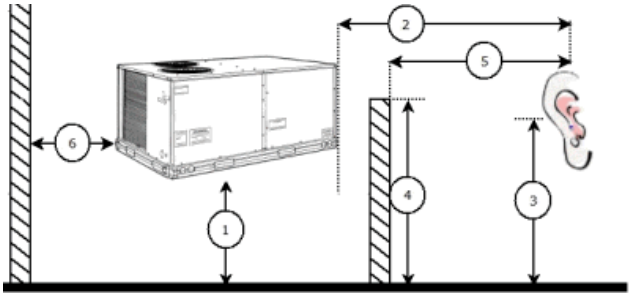

Advanced Accoustics Parameters

1. Unit height above ground:	**30.0**	ft
2. Horizontal distance from unit to receiver:	**50.0**	ft
3. Receiver height above ground:	**5.7**	ft
4. Height of obstruction:	**0.0**	ft
5. Horizontal distance from obstruction to receiver:	**0.0**	ft
6. Horizontal distance from unit to obstruction:	**0.0**	ft

Detailed Acoustics Information

Performance Summary For ID 5

Project: Climatec - City of Esc - Fire Station 1 04/12/2025
Prepared By: Shawn Harlan 07:47AM

Octave Band Center Freq. Hz	63	125	250	500	1k	2k	4k	8k	Overall
A	85.6	84.7	80.5	76.0	72.4	68.0	62.8	59.3	89.2 Lw
B	59.4	68.6	71.9	72.8	72.4	69.2	63.8	58.2	78.5 LwA
C	53.2	52.3	48.1	43.6	40.0	35.6	30.4	26.9	56.8 Lp
D	27.0	36.2	39.5	40.4	40.0	36.8	31.4	25.8	46.1 LpA

Legend
A Sound Power Levels at Unit's Acoustic Center, Lw
B A-Weighted Sound Power Levels at Unit's Acoustic Center, LwA
C Sound Pressure Levels at Specific Distance from Unit, Lp
D A-Weighted Sound Pressure Levels at Specific Distance from Unit, LpA

Calculation methods used in this program are patterned after the ASHRAE Guide; other ASHRAE Publications and the AHRI Acoustical Standards. While a very significant effort has been made to insure the technical accuracy of this program, it is assumed that the user is knowledgeable in the art of system sound estimation and is aware of the tolerances involved in real world acoustical estimation. This program makes certain assumptions as to the dominant sound sources and sound paths which may not always be appropriate to the real system being estimated. Because of this, no assurances can be offered that this software will always generate an accurate sound prediction from user supplied input data. If in doubt about the estimation of expected sound levels in a space, an Acoustical Engineer or a person with sound prediction expertise should be consulted.

Fan Curve

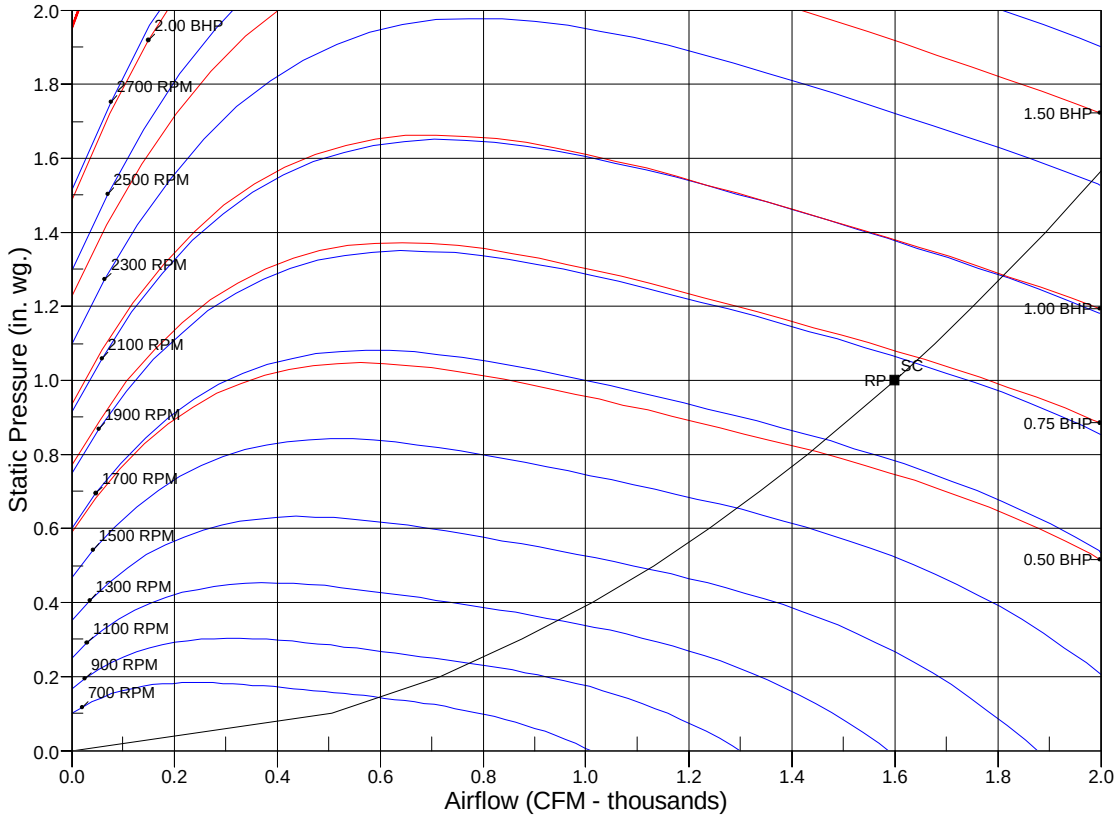

RPM = 1856 BHP = 0.69 Maximum RPM = 2660 Maximum BHP = 3.00
SC - System Curve RP - Rated Point

ID 6

Tag Cover Sheet
Unit Report
Certified Drawing
Performance Report

Unit Report For ID 6

Project: Climatec - City of Esc - Fire Station 1 04/12/2025
Prepared By: Shawn Harlan 07:47AM

Unit Parameters

Unit Model: **50GEQM06A2M5-0A0A0**
Unit Size: **06 (5 Tons)**
Volts-Phase-Hertz: **208-3-60**
Heating Type: **Heat Pump**
Refrigerant: **R-454B**
Heat Control: **Two Stage Cooling, Single Circuit**
Duct Cfg: **Horizontal Supply / Horizontal Return**

Dimensions (ft. in.) & Weight (lb.) ***

Unit Length: **6' 2.375"**
Unit Width: **3' 10.625"**
Unit Height: **3' 5.375"**
Total Operating Weight: **613** lb

*** Weights and Dimensions are approximate. Weight does not include unit packaging. Approximate dimensions are provided primarily for shipping purposes. For exact dimensions and weights, refer to appropriate product data catalog.

Lines and Filters

Return Air Filter Type: **Throwaway**
Return Air Filter Quantity: **4**
Return Air Filter Size: **16 x 16 x 2**

Selection includes construction throwaway filter into the base fan curve.

Unit Configuration

Standard/Medium Static - EcoBlue Vane Axial Fan
Al/Cu - Al/Cu - Louvered Hail Guards
Standard Electromechanical Controls (can be used with field installed economizers and dampers)
Standard

Warranty Information

5-Year compressor parts (STD.)
1-Year parts (STD.)

No optional warranties were selected.

NOTE: Please see Warranty Catalog 500-089 for explanation of policies and ordering methods.

Ordering Information

Part Number	Description	Quantity
50GEQM06A2M5-0A0A0	Rooftop Unit	1

Certified Drawing for ID 6

Project: Climatec - City of Esc - Fire Station 1
Prepared By: Shawn Harlan

04/12/2025
07:47AM

NOTES:

1. DIMENSIONS ARE IN INCHES, DIMENSIONS IN [ ] ARE IN MILLIMETERS.
2. CENTER OF GRAVITY
3. DIRECTION OF AIR FLOW
4. ALL VIEW DRAWN USING 3RD ANGLE

Carrier
THIS DOCUMENT IS THE PROPERTY OF CARRIER CORPORATION AND IS DELIVERED UPON THE EXPRESS CONDITION THAT THE CONTENTS WILL NOT BE DISCLOSED OR USED WITHOUT CARRIER CORPORATION'S WRITTEN CONSENT.
SUBMISSION OF THESE DRAWINGS OR DOCUMENTS DOES NOT CONSTITUTE PART PERFORMANCE OR ACCEPTANCE OF CONTRACT.

UNIT	J	K
50GEQ*04	33 3/8 [847]	18 5/8 [472]
50GEQ*05	41 3/8 [1051]	14 7/8 [378]
50GEQ*06	41 3/8 [1051]	14 7/8 [378]

	CONNECTION SIZES
A	1 3/8" [35] DIA FIELD POWER SUPPLY HOLE
B	2" [51] DIA POWER SUPPLY KNOCKOUT
C	1 3/4" [44] DIA GAUGE ACCESS PLUG
D	7/8" [22] DIA FIELD CONTROL WIRING HOLE
E	3/4"-14 NPT CONDENSATE DRAIN
G	2 1/2 " [64] DIA POWER SUPPLY KNOCK-OUT

THRU-THE-BASE CHART
THESE HOLES REQUIRED FOR USE CRBTMPWR008A00, 009A00

	THREADED CONDUIT SIZE	WIRE USE	REQ'D HOLE SIZES (MAX.)
W	1/2"	115V	7/8" [22.2]
X	1/2"	24V	7/8" [22.2]
Y *	3/4"	POWER	1 1/8" [28.6]
Z**	(009A00) 1/2" FPT	GAS	1 1/8" [28.6]
	FOR "THRU-THE-BASEPAN" FACTORY OPTION, FITTINGS FOR ONLY X,Y, & Z ARE PROVIDED		
*	SELECT EITHER 3/4" OR 1/2" FOR POWER, DEPENDING ON WIRE SIZE		
**	(008A00) PROVIDES 3/4" FPT THRU CURB FLANGE & FITTING.		

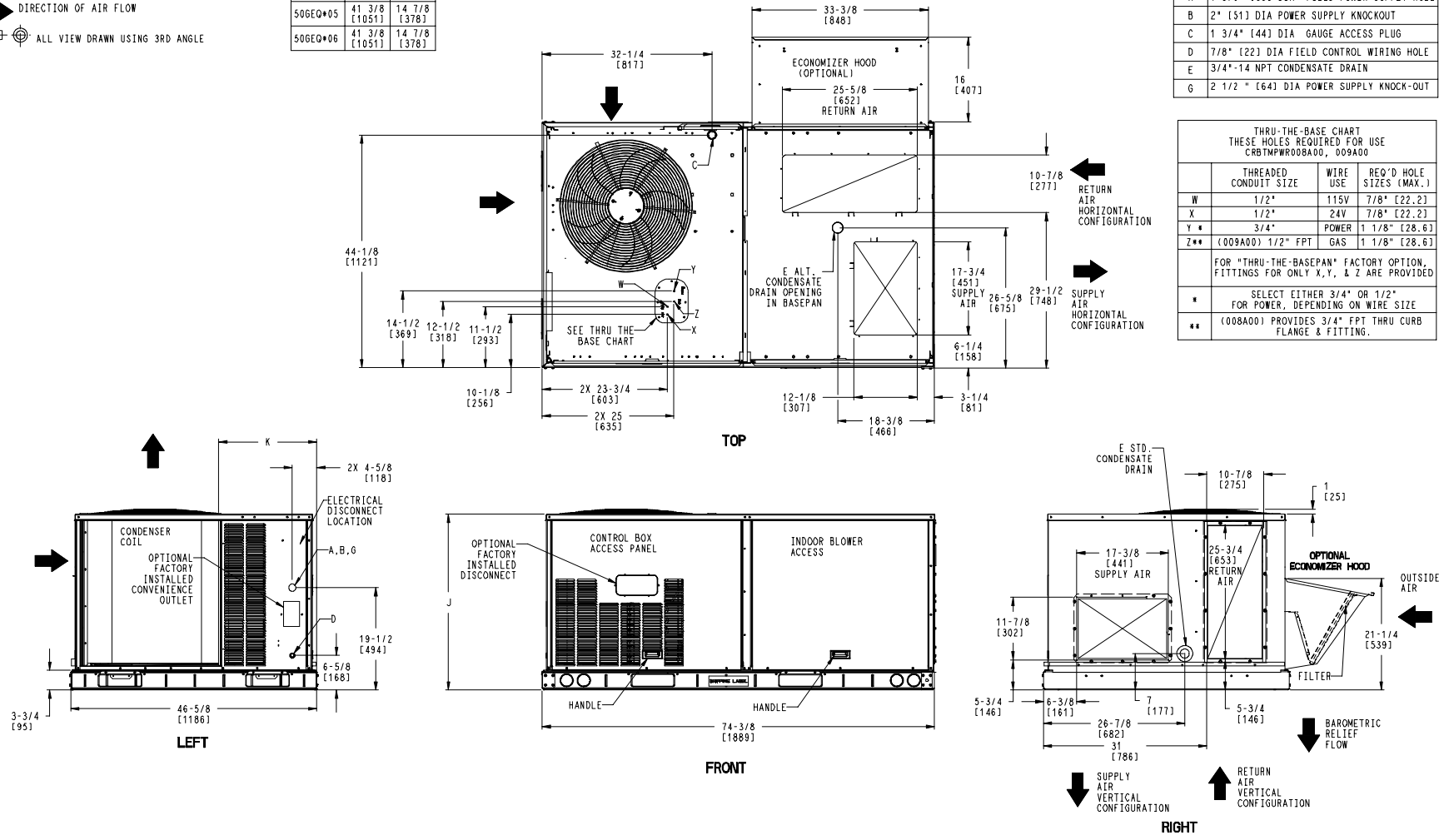

ITC CLASSIFICATION	SHEET	DATE	SUPERCEDES	50GEQ 04-06 SINGLE PACKAGE HEAT PUMP		REV
U.S. ECCN:NSR	1 OF 3	9/9/24	9/15/23		48TC006647	A

Certified Drawing for ID 6

Project: Climatec - City of Esc - Fire Station 1
Prepared By: Shawn Harlan

04/12/2025
07:47AM

UNIT	STD. UNIT WEIGHT *		CORNER WEIGHT (A)		CORNER WEIGHT (B)		CORNER WEIGHT (C)		CORNER WEIGHT (D)		C.G.		HEIGHT
	LBS.	KG.	LBS.	KG.	LBS.	KG.	LBS.	KG.	LBS.	KG.	X	Y	Z
50GEQ*04	475	215	128	58	120	54	110	50	117	53	36 [914]	22 3/8 [568]	16 1/8 [410]
50GEQ*05	594	269	163	74	148	67	135	61	149	68	35 3/8 [898]	22 5/16 [557]	16 1/2 [419]
50GEQ*06	596	270	163	74	148	67	135	61	149	68	35 3/8 [898]	22 5/16 [557]	16 1/2 [419]

*- STANDARD UNIT WEIGHT IS WITHOUT ELECTRIC HEAT AND WITHOUT PACKAGING.
FOR OTHER OPTIONS AND ACCESSORIES REFER TO THE PRODUCT DATA CATALOG.

Carrier
THIS DOCUMENT IS THE PROPERTY OF CARRIER CORPORATION AND IS DELIVERED UPON THE EXPRESS CONDITION THAT THE CONTENTS WILL NOT BE DISCLOSED OR USED WITHOUT CARRIER CORPORATION'S WRITTEN CONSENT.
SUBMISSION OF THESE DRAWINGS OR DOCUMENTS DOES NOT CONSTITUTE PART PERFORMANCE OR ACCEPTANCE OF CONTRACT.

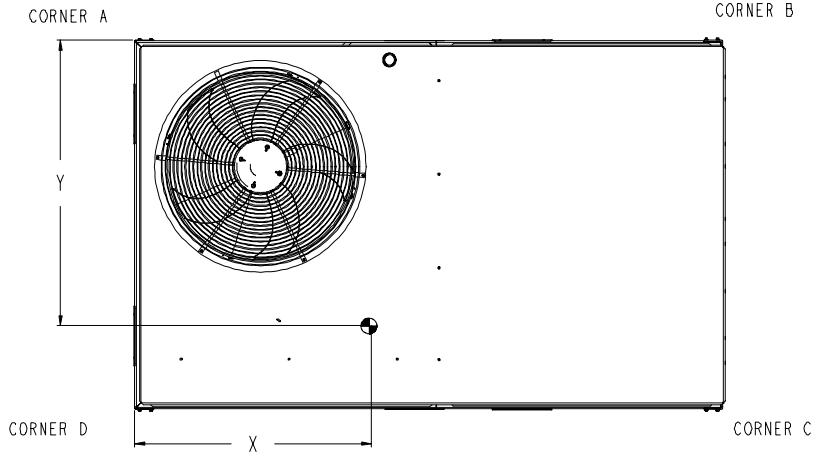

TOP

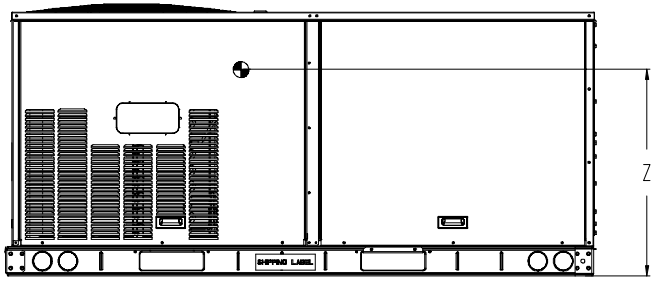

FRONT

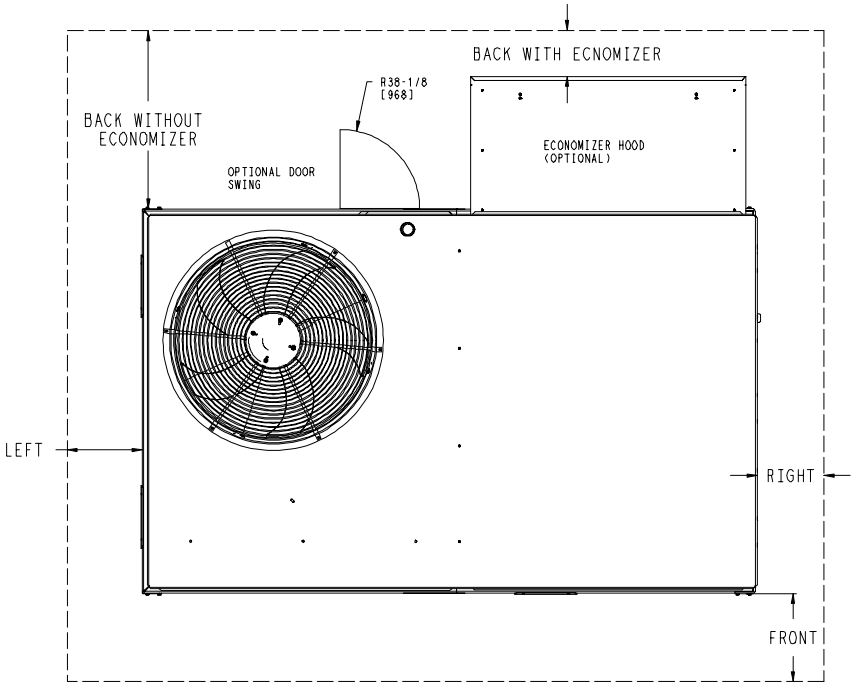

NOTE:

1. FOR ALL MINIMUM CLEARANCES LOCAL CODES OR JURISDICTIONS MAY PREVAIL.

CLEARANCE			
	SERVICE WITH:	SERVICE WITH:	OPERATING
SURFACE	CONDUCTIVE BARRIER	NONCONDUCTIVE BARRIER	CLEARANCE
FRONT	48 [1219mm]	36 [914mm]	18 [457mm]
LEFT	48 [1219mm]	42 [1067mm]	18 [457mm]
BACK W/O ECON	48 [1219mm]	42 [1067mm]	18 [457mm]
BACK W/ECON	36 [914mm]	36 [914mm]	18 [457mm]
RIGHT	36 [914mm]	36 [914mm]	18 [457mm]
TOP	72 [1829mm]	72 [1829mm]	72 [1829mm]

ITC CLASSIFICATION	SHEET	DATE	SUPERCEDES			REV
U.S. ECCN:NSR	2 OF 3	9/9/24	9/15/23	50GEQ 04-06 SINGLE PACKAGE HEAT PUMP	48TC006647	A

Carrier | THIS DOCUMENT IS THE PROPERTY OF CARRIER CORPORATION AND IS DELIVERED UPON THE EXPRESS CONDITION THAT THE CONTENTS WILL NOT BE DISCLOSED OR USED WITHOUT CARRIER CORPORATION'S WRITTEN CONSENT. | SUBMISSION OF THESE DRAWINGS OR DOCUMENTS DOES NOT CONSTITUTE PART PERFORMANCE OR ACCEPTANCE OF CONTRACT.

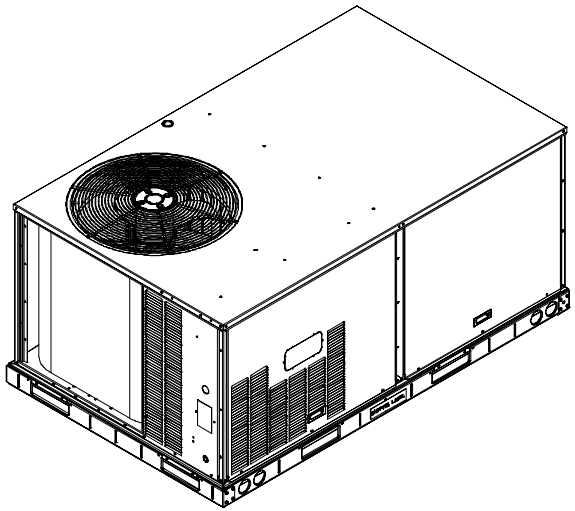

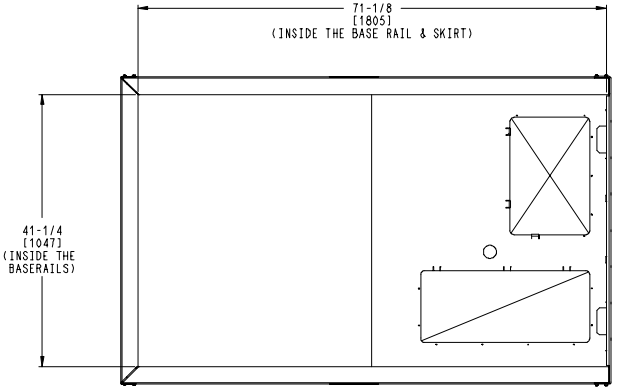

INSIDE BASERAIL DIMENSIONS
BOTTOM

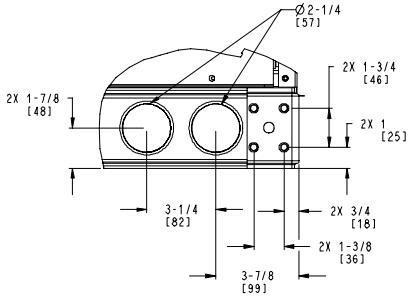

DETAIL **C**
TYP 4 PLCS

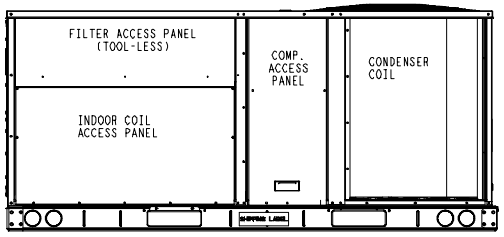

BACK

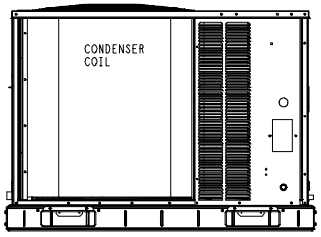

LEFT

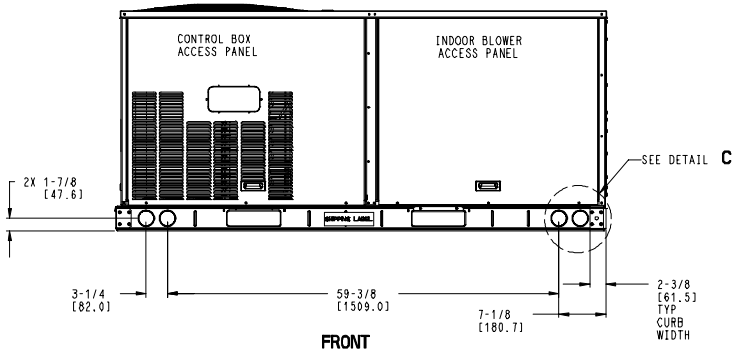

FRONT

ITC CLASSIFICATION	SHEET	DATE	SUPERCEDES			REV
U.S. ECCN:NSR	3 OF 3	9/9/24	9/15/23	50GEQ 04-06 SINGLE PACKAGE HEAT PUMP	48TC006647	A

Performance Summary For ID 6

Project: Climatec - City of Esc - Fire Station 1 04/12/2025
Prepared By: Shawn Harlan 07:47AM

Part Number:50GEQM06A2M5-0A0A0

Refrigerant:	**R-454B**	
ARI SEER:	**17.00**	
ARI SEER2:	**16.00**	
Application EER (Rooftop Unit only):	**11.92**	

Base Unit Dimensions

Unit Length:	**74.4**	in
Unit Width:	**46.6**	in
Unit Height:	**41.4**	in

Operating Weight

Base Unit Weight:	**596**	lb
Al/Cu - Al/Cu - Louvered Hail Guards:	**17**	lb
Total Operating Weight:	**613**	lb

Unit

Unit Voltage-Phase-Hertz:	**208-3-60**	
Air Discharge:	**Horizontal**	
Fan Drive Type:	**Direct Drive**	
Actual Airflow:	**2000**	CFM
Site Altitude:	**0**	ft

Cooling Performance

Condenser Entering Air DB:	**95.0**	F
Evaporator Entering Air DB:	**80.0**	F
Evaporator Entering Air WB:	**67.0**	F
Entering Air Enthalpy:	**31.44**	BTU/lb
Evaporator Leaving Air DB:	**57.3**	F
Evaporator Leaving Air WB:	**57.1**	F
Evaporator Leaving Air Enthalpy:	**24.49**	BTU/lb
Unit Discharge Air DB:	**58.4**	F
Unit Discharge Air WB:	**57.6**	F
Unit Discharge Air Enthalpy:	**24.76**	BTU/lb
Gross Cooling Capacity:	**62.53**	MBH
Net Cooling Capacity:	**60.07**	MBH
Gross Sensible Capacity:	**49.01**	MBH
Net Sensible Capacity:	**46.55**	MBH
Compressor Power Input:	**4.02**	kW
Coil Bypass Factor:	**0.014**	

Heating Performance

Outdoor Ambient Temperature:	**47.0**	F
Entering Air Indoor Coil DB:	**70.0**	F
Leaving Air Indoor Coil DB:	**95.2**	F
Total Heating Capacity:	**54.50**	MBH
Integrated Heating Capacity:	**54.50**	MBH
Heating Power Input:	**4.20**	kW
High Temperature COP:	**3.80**	
Low Temperature COP:	**2.50**	
HSPF:	**7.2**	
High Temperature COP2:	**3.80**	
Low Temperature COP2:	**2.50**	
HSPF2:	**7.2**	

Supply Fan

External Static Pressure:	**1.00**	in wg
Fan RPM:	**1995**	
Fan Power:	**0.85**	BHP

Performance Summary For ID 6

Project: Climatec - City of Esc - Fire Station 1 04/12/2025
Prepared By: Shawn Harlan 07:47AM

NOTE: **Selected IFM RPM Range: 1197 - 2390**

Selection includes construction throwaway filter into the base fan curve. This filter is not MERV Rated.

Electrical Data

Voltage Range:	**187 - 253**
Compressor #1 RLA:	**15.4**
Compressor #1 LRA:	**150**
Indoor Fan Motor Type:	**MED**
Indoor Fan Motor FLA (Total):	**9.2**
Power Supply MCA:	**30**
Power Supply MOCP (Fuse or HACR):	**45**
Disconnect Size FLA:	**30**
Disconnect Size LRA:	**166**
Electrical Convenience Outlet:	**None**
Outdoor Fan [Qty / FLA (ea)]:	**1 / 1.3**

Control Panel SCCR: 5kA RMS at Rated Symmetrical Voltage

Acoustics

Sound Power Levels, db re 10E-12 Watts

	Discharge	Inlet	Outdoor
63 Hz	91.7	90.2	85.6
125 Hz	82.8	79.0	84.7
250 Hz	76.9	72.0	80.5
500 Hz	73.4	65.7	76.0
1000 Hz	70.0	67.9	72.4
2000 Hz	67.1	58.7	68.0
4000 Hz	63.8	52.5	62.8
8000 Hz	60.1	46.3	59.3
A-Weighted	76.6	72.0	79.0

Advanced Acoustics

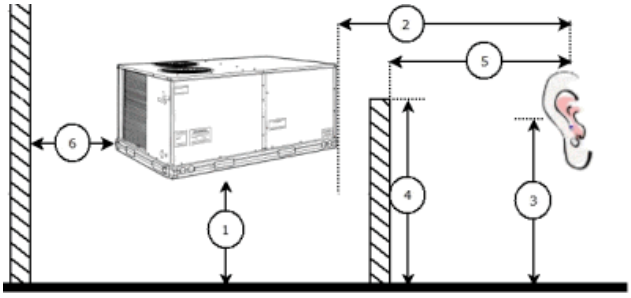

Advanced Accoustics Parameters

1. Unit height above ground:	**30.0**	ft
2. Horizontal distance from unit to receiver:	**50.0**	ft
3. Receiver height above ground:	**5.7**	ft
4. Height of obstruction:	**0.0**	ft
5. Horizontal distance from obstruction to receiver:	**0.0**	ft
6. Horizontal distance from unit to obstruction:	**0.0**	ft

Detailed Acoustics Information

Performance Summary For ID 6

Project: Climatec - City of Esc - Fire Station 1 04/12/2025
Prepared By: Shawn Harlan 07:47AM

Octave Band Center Freq. Hz	63	125	250	500	1k	2k	4k	8k	Overall
A	85.6	84.7	80.5	76.0	72.4	68.0	62.8	59.3	89.2 Lw
B	59.4	68.6	71.9	72.8	72.4	69.2	63.8	58.2	78.5 LwA
C	53.2	52.3	48.1	43.6	40.0	35.6	30.4	26.9	56.8 Lp
D	27.0	36.2	39.5	40.4	40.0	36.8	31.4	25.8	46.1 LpA

Legend
A Sound Power Levels at Unit's Acoustic Center, Lw
B A-Weighted Sound Power Levels at Unit's Acoustic Center, LwA
C Sound Pressure Levels at Specific Distance from Unit, Lp
D A-Weighted Sound Pressure Levels at Specific Distance from Unit, LpA

Calculation methods used in this program are patterned after the ASHRAE Guide; other ASHRAE Publications and the AHRI Acoustical Standards. While a very significant effort has been made to insure the technical accuracy of this program, it is assumed that the user is knowledgeable in the art of system sound estimation and is aware of the tolerances involved in real world acoustical estimation. This program makes certain assumptions as to the dominant sound sources and sound paths which may not always be appropriate to the real system being estimated. Because of this, no assurances can be offered that this software will always generate an accurate sound prediction from user supplied input data. If in doubt about the estimation of expected sound levels in a space, an Acoustical Engineer or a person with sound prediction expertise should be consulted.

Fan Curve

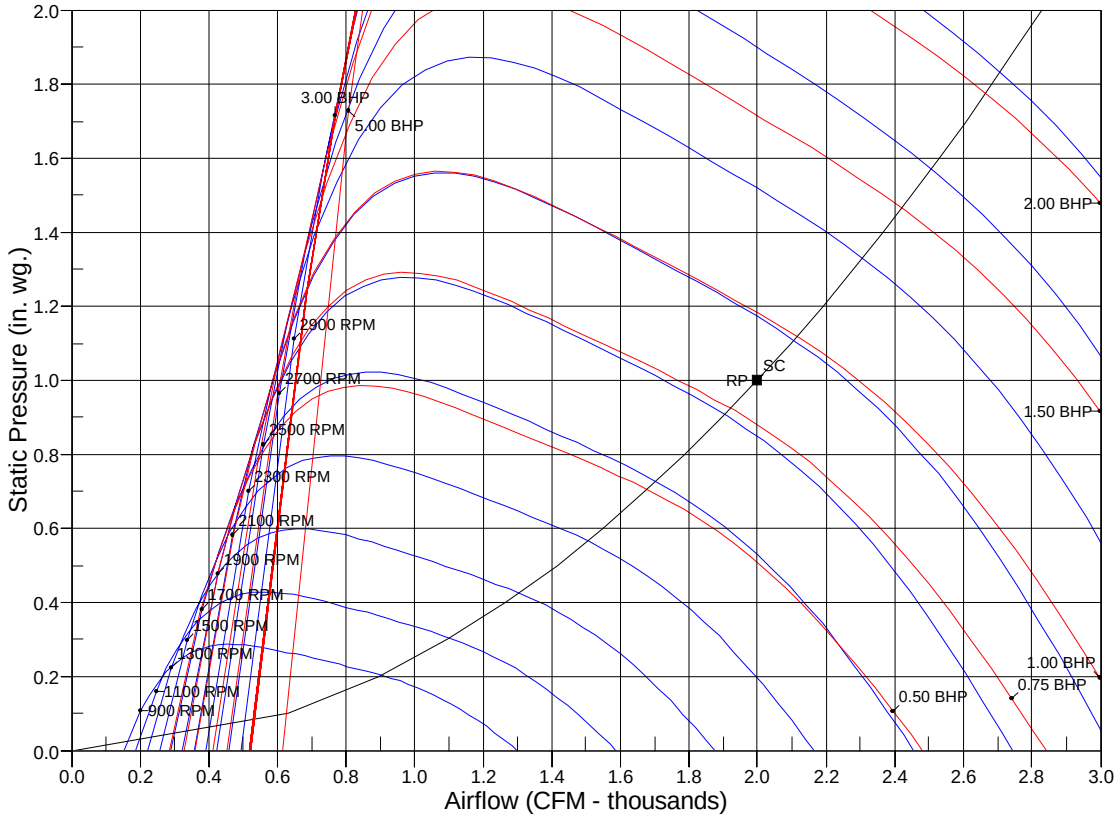

RPM = 1995 BHP = 0.85 Maximum RPM = 2836 Maximum BHP = 3.00
SC - System Curve RP - Rated Point

ID 8

Tag Cover Sheet
Unit Report
Certified Drawing
Performance Report

Unit Report For ID 8

Project: Climatec - City of Esc - Fire Station 1 04/12/2025
Prepared By: Shawn Harlan 07:47AM

Unit Parameters

Unit Model: **50FEQM12A2M5-0A0A0**
Unit Size: **12 (10 Tons)**
Volts-Phase-Hertz: **208-3-60**
Heating Type: **Heat Pump**
Refrigerant: **R-454B**
Heat Control: **Two-Stage Cooling, Single Circuit**
Duct Cfg: **Horizontal Supply / Horizontal Return**

Dimensions (ft. in.) & Weight (lb.) ***

Unit Length: **7' 4.125"**
Unit Width: **4' 11.5"**
Unit Height: **4' 1.375"**
Total Operating Weight: **1001** lb

*** Weights and Dimensions are approximate. Weight does not include unit packaging. Approximate dimensions are provided primarily for shipping purposes. For exact dimensions and weights, refer to appropriate product data catalog.

Lines and Filters

Return Air Filter Type: **Throwaway**
Return Air Filter Quantity: **4**
Return Air Filter Size: **20 x 20 x 2**

Selection includes construction throwaway filter into the base fan curve.

Unit Configuration

Standard/Medium Static - EcoBlue Vane Axial Fan
Al/Cu - Al/Cu - Louvered Hail Guards
Standard Electromechanical Controls (can be used with field installed economizers and dampers)
Standard

Warranty Information

1-Year parts (STD.)
5-Year Compressor (std.)

No optional warranties were selected.

NOTE: Please see Warranty Catalog 500-089 for explanation of policies and ordering methods.

Ordering Information

Part Number	Description	Quantity
50FEQM12A2M5-0A0A0	Rooftop Unit	1
Field Installed Accessories		
CRPWREXH028A01	Horizontal Power Exhaust	1

Certified Drawing for ID 8

Project: Climatec - City of Esc - Fire Station 1
Prepared By: Shawn Harlan

04/12/2025
07:47AM

NOTES:

1. DIMENSIONS ARE IN INCHES. DIMENSIONS IN [ ] ARE IN MILLIMETERS.
2. CENTER OF GRAVITY
3. DIRECTION OF AIR FLOW
4. ALL VIEW DRAWN USING 3RD ANGLE

UNIT	OUTDOOR COIL TYPE	H
50FEQ-12	RTPF	15 7/8 [403]
RTPF - ROUND TUBE, PLATE FIN (COPPER/ALUM)		

Carrier
THIS DOCUMENT IS THE PROPERTY OF CARRIER CORPORATION AND IS DELIVERED UPON THE EXPRESS CONDITION THAT THE CONTENTS WILL NOT BE DISCLOSED OR USED WITHOUT CARRIER CORPORATION'S WRITTEN CONSENT.
SUBMISSION OF THESE DRAWINGS OR DOCUMENTS DOES NOT CONSTITUTE PART PERFORMANCE OR ACCEPTANCE OF CONTRACT.

	CONNECTION SIZES
A	1 3/8" [35] DIA FIELD POWER SUPPLY HOLE
B	2 1/2" [64] DIA POWER SUPPLY KNOCKOUT
C	1 3/4" [51] DIA GAUGE ACCESS PLUG
D	7/8" [22] DIA FIELD CONTROL WIRING HOLE
E	3/4"-14 NPT CONDENSATE DRAIN
G	2" [51] DIA POWER SUPPLY KNOCK-OUT

THRU-THE-BASE CHART THESE HOLES REQUIRED FOR USE CRBTMPWR002A01			
	THREADED CONDUIT SIZE	WIRE USE	REQ'D HOLE SIZES (MAX.)
W	1/2"	ACC.	7/8" [22.2]
X	1/2"	24V	7/8" [22.2]
Y	1 1/4" (002)	POWER	1 3/4" [44.4]
	FOR "THRU-THE-BASEPAN" FACTORY OPTION, FITTINGS FOR ONLY X & Y ARE PROVIDED		

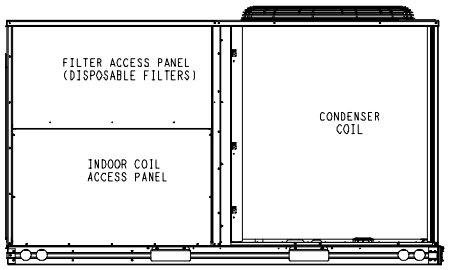

BACK

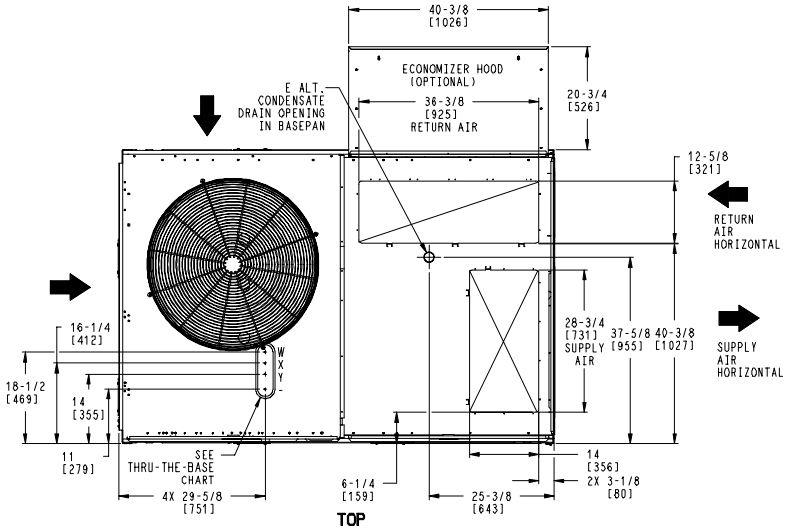

TOP

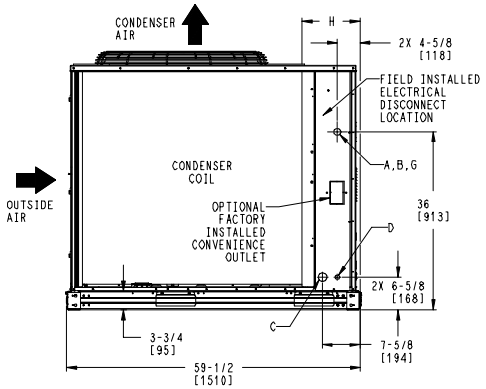

LEFT

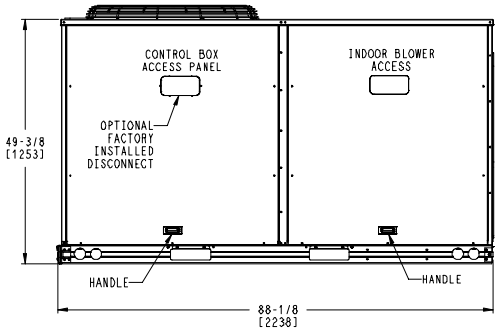

FRONT

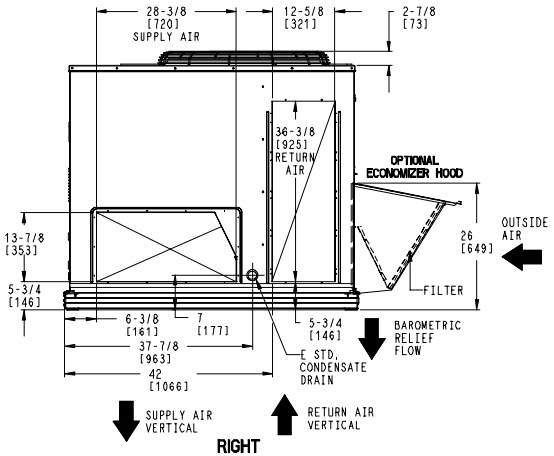

RIGHT

ITC CLASSIFICATION	SHEET	DATE	SUPERCEDES			REV
U.S. ECCN:NSR	1 OF 3	02/20/24	-	50FEQ 12 SINGLE ZONE ELECTRICAL HEAT PUMP	48TM009810	-

Certified Drawing for ID 8

Project: Climatec - City of Esc - Fire Station 1
Prepared By: Shawn Harlan

04/12/2025
07:47AM

UNIT	OUTDOOR COIL TYPE	STD. UNIT WEIGHT***		CORNER WEIGHT (A)		CORNER WEIGHT (B)		CORNER WEIGHT (C)		CORNER WEIGHT (D)		C.G.		
		LBS.	KG.	LBS.	KG.	LBS.	KG.	LBS.	KG.	LBS.	KG.	X	Y	Z
50FEQ-12	RTPF	955	433	239	108	194	88	234	106	288	131	39 1/2 [1003]	32 1/2 [826]	19 1/8 [486]
RTPF - ROUND TUBE, PLATE FIN (COPPER/ALUM)														

*** STANDARD UNIT WEIGHT IS WITHOUT ELECTRIC HEAT AND WITHOUT PACKAGING.
FOR OTHER OPTIONS AND ACCESSORIES, REFER TO THE PRODUCT DATA CATALOG.

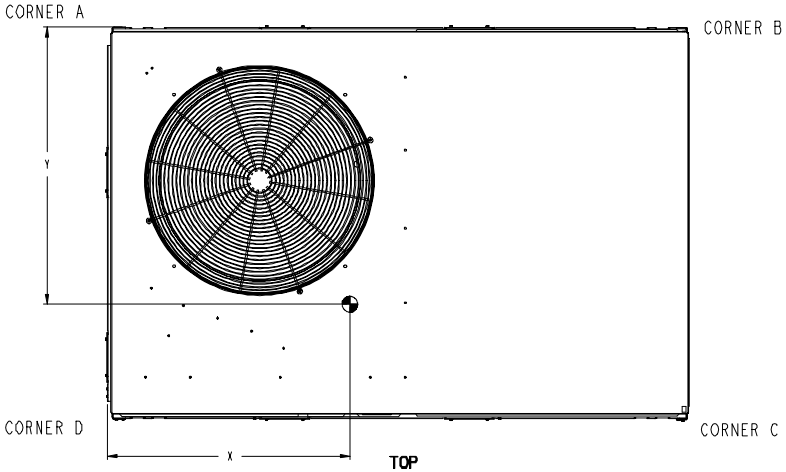

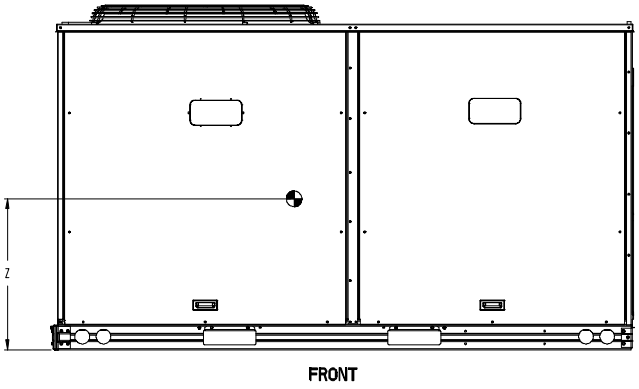

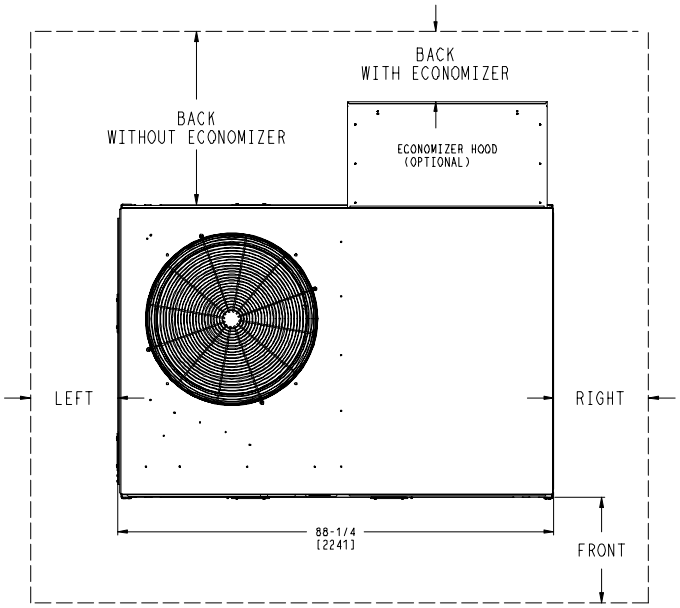

THIS DOCUMENT IS THE PROPERTY OF CARRIER CORPORATION AND IS DELIVERED UPON THE EXPRESS CONDITION THAT THE CONTENTS WILL NOT BE DISCLOSED OR USED WITHOUT CARRIER CORPORATION'S WRITTEN CONSENT.

SUBMISSION OF THESE DRAWINGS OR DOCUMENTS DOES NOT CONSTITUTE PART PERFORMANCE OR ACCEPTANCE OF CONTRACT.

NOTE:

1. FOR ALL MINIMUM CLEARANCES LOCAL CODES OR JURISDICTIONS MAY PREVAIL.

CLEARANCE		
	SERVICE WITH:	SERVICE WITH:
SURFACE	CONDUCTIVE BARRIER	NONCONDUCTIVE BARRIER
FRONT	48 [1219mm]	36 [914mm]
LEFT	48 [1219mm]	42 [1067mm]
BACK W/O ECON	48 [1219mm]	42 [1067mm]
BACK W/ECON	36 [914mm]	36 [914mm]
RIGHT	36 [914mm]	36 [914mm]
TOP	72 [1829mm]	72 [1829mm]

ITC CLASSIFICATION	SHEET	DATE	SUPERCEDES			REV
U.S. ECCN:NSR	2 OF 3	02/20/24	-	50FEQ 12 SINGLE ZONE ELECTRICAL HEAT PUMP	48TM009810	-

Certified Drawing for ID 8

Project: Climatec - City of Esc - Fire Station 1
Prepared By: Shawn Harlan

04/12/2025
07:47AM

Carrier

THIS DOCUMENT IS THE PROPERTY OF CARRIER CORPORATION AND IS DELIVERED UPON THE EXPRESS CONDITION THAT THE CONTENTS WILL NOT BE DISCLOSED OR USED WITHOUT CARRIER CORPORATION'S WRITTEN CONSENT.

SUBMISSION OF THESE DRAWINGS OR DOCUMENTS DOES NOT CONSTITUTE PART PERFORMANCE OR ACCEPTANCE OF CONTRACT.

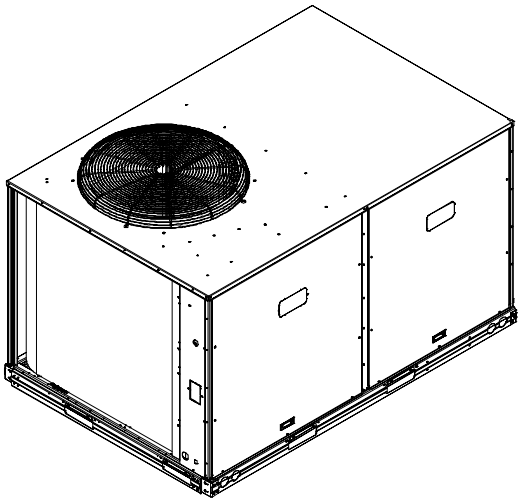

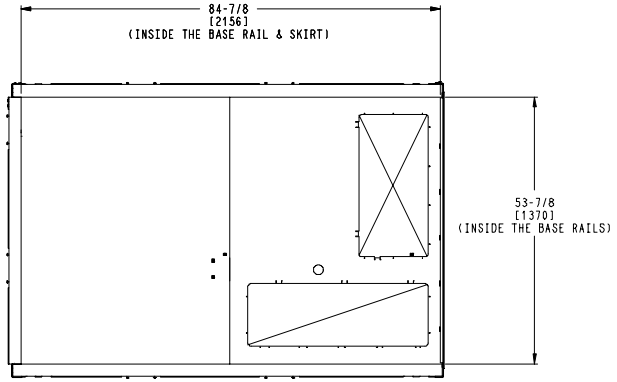

INSIDE BASERAIL DIMENSIONS
BOTTOM

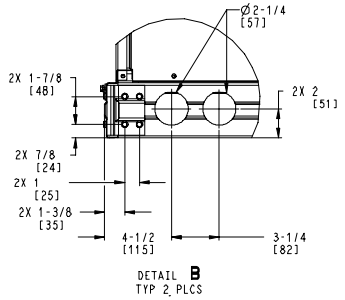

DETAIL **B**
TYP 2 PLCS

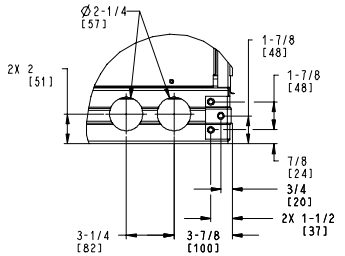

DETAIL **C**
TYP 2 PLCS

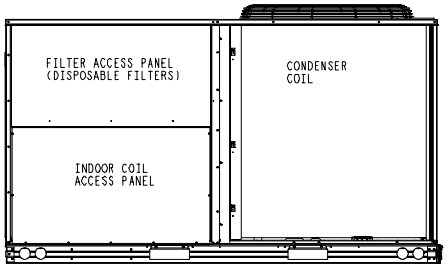

BACK

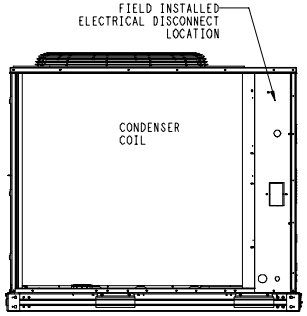

LEFT

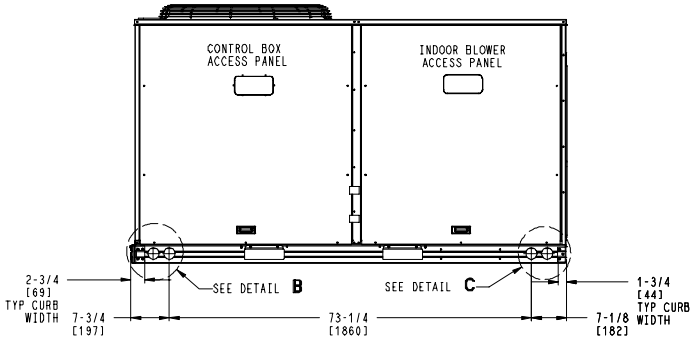

FRONT

ITC CLASSIFICATION	SHEET	DATE	SUPERCEDES			REV
U.S. ECCN:NSR	3 OF 3	02/20/24	-	50FEQ 12 SINGLE ZONE ELECTRICAL HEAT PUMP	48TM009810	-

Performance Summary For ID 8

Project: Climatec - City of Esc - Fire Station 1 04/12/2025
Prepared By: Shawn Harlan 07:47AM

Part Number:50FEQM12A2M5-0A0A0

Refrigerant:	**R-454B**	
ARI EER:	**11.00**	
Application EER (Rooftop Unit only):	**11.07**	
IEER:	**15.0**	

Base Unit Dimensions

Unit Length:	**88.1**	in
Unit Width:	**59.5**	in
Unit Height:	**49.4**	in

Operating Weight

Base Unit Weight:	**955**	lb
Al/Cu - Al/Cu - Louvered Hail Guards:	**16**	lb
Accessories		
Horizontal Power Exhaust:	**30**	lb
Total Operating Weight:	**1001**	lb

Unit

Unit Voltage-Phase-Hertz:	**208-3-60**	
Air Discharge:	**Horizontal**	
Fan Drive Type:	**Vane Axial**	
Actual Airflow:	**4000**	CFM
Site Altitude:	**0**	ft

Cooling Performance

Condenser Entering Air DB:	**95.0**	F
Evaporator Entering Air DB:	**80.0**	F
Evaporator Entering Air WB:	**67.0**	F
Entering Air Enthalpy:	**31.44**	BTU/lb
Evaporator Leaving Air DB:	**57.6**	F
Evaporator Leaving Air WB:	**56.9**	F
Evaporator Leaving Air Enthalpy:	**24.35**	BTU/lb
Unit Discharge Air DB:	**58.8**	F
Unit Discharge Air WB:	**57.4**	F
Unit Discharge Air Enthalpy:	**24.62**	BTU/lb
Gross Cooling Capacity:	**127.67**	MBH
Net Cooling Capacity:	**122.65**	MBH
Gross Sensible Capacity:	**96.60**	MBH
Net Sensible Capacity:	**91.58**	MBH
Compressor Power Input:	**9.01**	kW
Coil Bypass Factor:	**0.041**	

Heating Performance

Outdoor Ambient Temperature:	**47.0**	F
Entering Air Indoor Coil DB:	**70.0**	F
Leaving Air Indoor Coil DB:	**96.4**	F
Total Heating Capacity:	**113.90**	MBH
Integrated Heating Capacity:	**113.90**	MBH
Heating Power Input:	**9.40**	kW
High Temperature COP:	**3.40**	
Low Temperature COP:	**2.25**	

Supply Fan

External Static Pressure:	**1.00**	in wg
Options / Accessories Static Pressure		
Power Exhaust:	**(Fan Data Includes Drop)**	
Application External Static (ESP + Unit Opts/Acc.):	**1.00**	in wg
Fan RPM:	**1716**	

Performance Summary For ID 8

Project: Climatec - City of Esc - Fire Station 1 04/12/2025
Prepared By: Shawn Harlan 07:47AM

Fan Power: **1.72** BHP
NOTE: **Selected IFM RPM Range: 1100 - 2000**

Selection includes construction throwaway filter into the base fan curve. This filter is not MERV Rated.

Power Exhaust
Return Duct Static: **0.40** in wg
Max. Air To Exhaust: **2850** CFM

Electrical Data
Voltage Range: **187 - 253**
Compressor #1 RLA: **18.6**
Compressor #1 LRA: **155**
Compressor #2 RLA: **18.6**
Compressor #2 LRA: **155**
Indoor Fan Motor Type: **MED**
Indoor Fan Motor FLA (Total): **6.4**
Power Supply MCA: **60**
Power Supply MOCP (Fuse or HACR): **70**
Disconnect Size FLA: **63**
Disconnect Size LRA: **330**
Electrical Convenience Outlet: **None**
Power Exhaust [Kit Qty / FLA(ea kit)]: **1 / 3.8**
Outdoor Fan [Qty / FLA (ea)]: **1 / 7.4**

Control Panel SCCR: 5kA RMS at Rated Symmetrical Voltage

Acoustics
Sound Power Levels, db re 10E-12 Watts

	Discharge	Inlet	Outdoor
63 Hz	91.6	53.3	88.1
125 Hz	86.7	81.0	90.0
250 Hz	82.0	75.5	85.9
500 Hz	79.7	72.0	83.0
1000 Hz	80.8	71.1	81.6
2000 Hz	77.4	65.8	78.5
4000 Hz	71.7	56.3	76.4
8000 Hz	63.6	49.1	75.5
A-Weighted	84.7	75.3	87.0

Advanced Acoustics

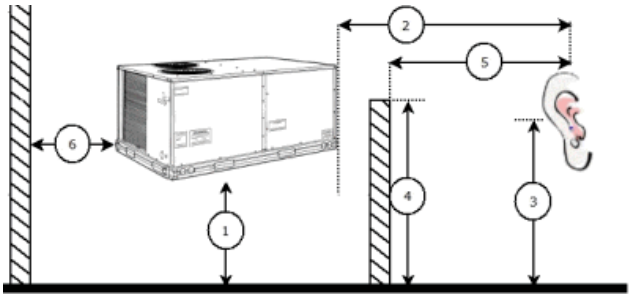

Advanced Accoustics Parameters
1. Unit height above ground: **30.0** ft
2. Horizontal distance from unit to receiver: **50.0** ft
3. Receiver height above ground: **5.7** ft

Performance Summary For ID 8

Project: Climatec - City of Esc - Fire Station 1 04/12/2025
Prepared By: Shawn Harlan 07:47AM

4. Height of obstruction: **0.0** ft
5. Horizontal distance from obstruction to receiver: **0.0** ft
6. Horizontal distance from unit to obstruction: **0.0** ft

Detailed Acoustics Information

Octave Band Center Freq. Hz	63	125	250	500	1k	2k	4k	8k	Overall
A	88.1	90.0	85.9	83.0	81.6	78.5	76.4	75.5	94.0 Lw
B	61.9	73.9	77.3	79.8	81.6	79.7	77.4	74.4	87.0 LwA
C	55.7	57.6	53.5	50.6	49.2	46.1	44.0	43.1	61.6 Lp
D	29.5	41.5	44.9	47.4	49.2	47.3	45.0	42.0	54.6 LpA

Legend
A Sound Power Levels at Unit's Acoustic Center, Lw
B A-Weighted Sound Power Levels at Unit's Acoustic Center, LwA
C Sound Pressure Levels at Specific Distance from Unit, Lp
D A-Weighted Sound Pressure Levels at Specific Distance from Unit, LpA

Calculation methods used in this program are patterned after the ASHRAE Guide; other ASHRAE Publications and the AHRI Acoustical Standards. While a very significant effort has been made to insure the technical accuracy of this program, it is assumed that the user is knowledgeable in the art of system sound estimation and is aware of the tolerances involved in real world acoustical estimation. This program makes certain assumptions as to the dominant sound sources and sound paths which may not always be appropriate to the real system being estimated. Because of this, no assurances can be offered that this software will always generate an accurate sound prediction from user supplied input data. If in doubt about the estimation of expected sound levels in a space, an Acoustical Engineer or a person with sound prediction expertise should be consulted.

Performance Summary For ID 8

Project: Climatec - City of Esc - Fire Station 1
Prepared By: Shawn Harlan

04/12/2025
07:47AM

Fan Curve

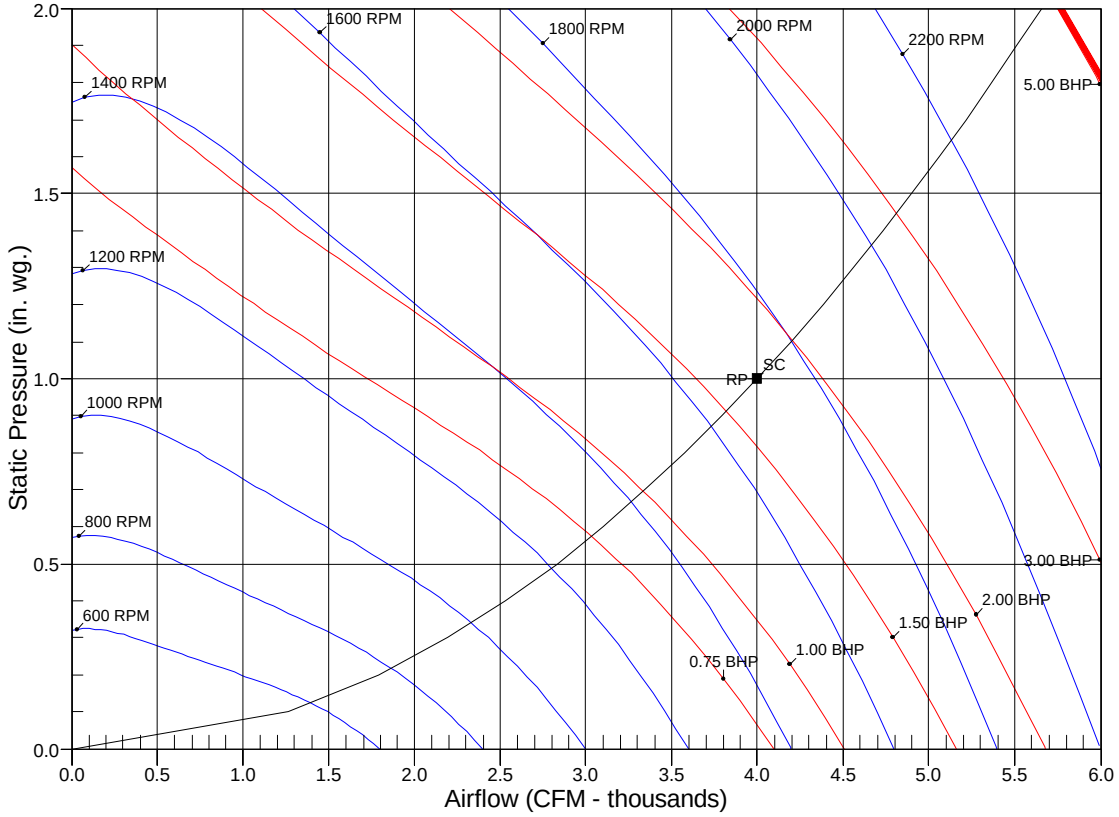

RPM = 1716 BHP = 1.72 Maximum RPM = 2200 Maximum BHP = 5.00
SC - System Curve RP - Rated Point

ID 9

Tag Cover Sheet
Unit Report
Certified Drawing
Performance Report

Unit Report For ID 9

Project: Climatec - City of Esc - Fire Station 1 04/12/2025
Prepared By: Shawn Harlan 07:47AM

Unit Parameters

Unit Model: **50GEQM06A2M5-0A0A0**
Unit Size: **06 (5 Tons)**
Volts-Phase-Hertz: **208-3-60**
Heating Type: **Heat Pump**
Refrigerant: **R-454B**
Heat Control: **Two Stage Cooling, Single Circuit**
Duct Cfg: **Horizontal Supply / Horizontal Return**

Dimensions (ft. in.) & Weight (lb.) ***

Unit Length: **6' 2.375"**
Unit Width: **3' 10.625"**
Unit Height: **3' 5.375"**
Total Operating Weight: **613** lb

*** Weights and Dimensions are approximate. Weight does not include unit packaging. Approximate dimensions are provided primarily for shipping purposes. For exact dimensions and weights, refer to appropriate product data catalog.

Lines and Filters

Return Air Filter Type: **Throwaway**
Return Air Filter Quantity: **4**
Return Air Filter Size: **16 x 16 x 2**

Selection includes construction throwaway filter into the base fan curve.

Unit Configuration

Standard/Medium Static - EcoBlue Vane Axial Fan
Al/Cu - Al/Cu - Louvered Hail Guards
Standard Electromechanical Controls (can be used with field installed economizers and dampers)
Standard

Warranty Information

5-Year compressor parts (STD.)
1-Year parts (STD.)

No optional warranties were selected.

NOTE: Please see Warranty Catalog 500-089 for explanation of policies and ordering methods.

Ordering Information

Part Number	Description	Quantity
50GEQM06A2M5-0A0A0	Rooftop Unit	1

Certified Drawing for ID 9

Project: Climatec - City of Esc - Fire Station 1
Prepared By: Shawn Harlan

04/12/2025
07:47AM

NOTES:

1. DIMENSIONS ARE IN INCHES, DIMENSIONS IN [ ] ARE IN MILLIMETERS.
2. CENTER OF GRAVITY
3. DIRECTION OF AIR FLOW
4. ALL VIEW DRAWN USING 3RD ANGLE

UNIT	J	K
50GEQ*04	33 3/8 [847]	18 5/8 [472]
50GEQ*05	41 3/8 [1051]	14 7/8 [378]
50GEQ*06	41 3/8 [1051]	14 7/8 [378]

Carrier
THIS DOCUMENT IS THE PROPERTY OF CARRIER CORPORATION AND IS DELIVERED UPON THE EXPRESS CONDITION THAT THE CONTENTS WILL NOT BE DISCLOSED OR USED WITHOUT CARRIER CORPORATION'S WRITTEN CONSENT.
SUBMISSION OF THESE DRAWINGS OR DOCUMENTS DOES NOT CONSTITUTE PART PERFORMANCE OR ACCEPTANCE OF CONTRACT.

	CONNECTION SIZES
A	1 3/8" [35] DIA FIELD POWER SUPPLY HOLE
B	2" [51] DIA POWER SUPPLY KNOCKOUT
C	1 3/4" [44] DIA GAUGE ACCESS PLUG
D	7/8" [22] DIA FIELD CONTROL WIRING HOLE
E	3/4"-14 NPT CONDENSATE DRAIN
G	2 1/2 " [64] DIA POWER SUPPLY KNOCK-OUT

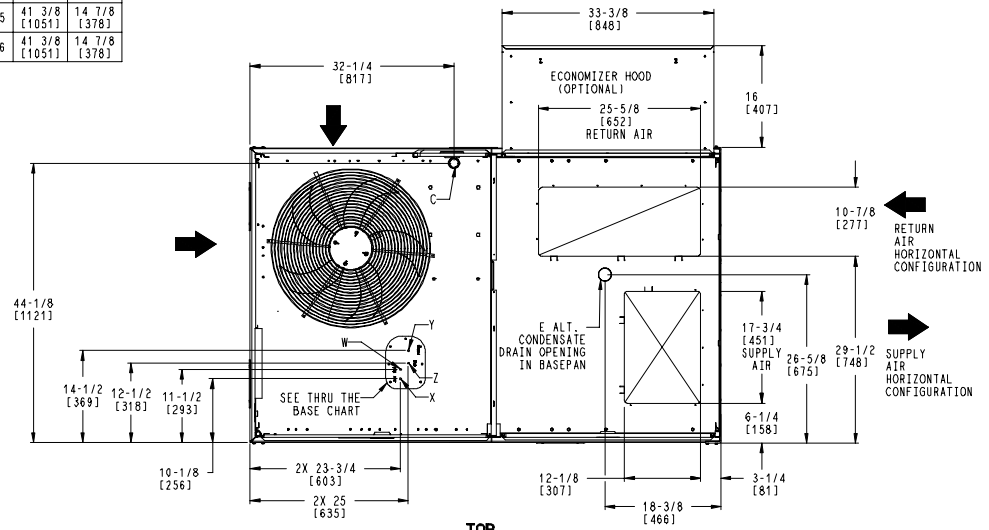

THRU-THE-BASE CHART THESE HOLES REQUIRED FOR USE CRBTMPWR008A00, 009A00			
	THREADED CONDUIT SIZE	WIRE USE	REQ'D HOLE SIZES (MAX.)
W	1/2"	115V	7/8" [22.2]
X	1/2"	24V	7/8" [22.2]
Y *	3/4"	POWER	1 1/8" [28.6]
Z**	(009A00) 1/2" FPT	GAS	1 1/8" [28.6]
	FOR "THRU-THE-BASEPAN" FACTORY OPTION, FITTINGS FOR ONLY X,Y, & Z ARE PROVIDED		
*	SELECT EITHER 3/4" OR 1/2" FOR POWER, DEPENDING ON WIRE SIZE		
**	(008A00) PROVIDES 3/4" FPT THRU CURB FLANGE & FITTING.		

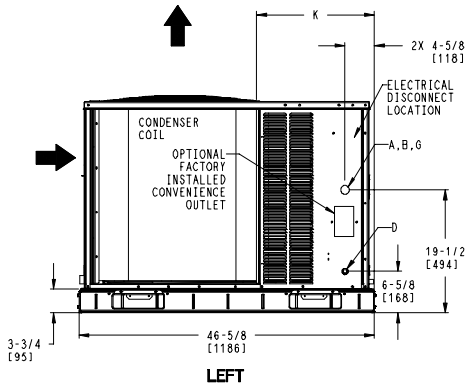

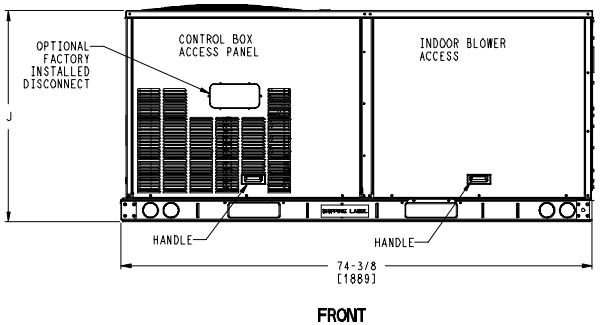

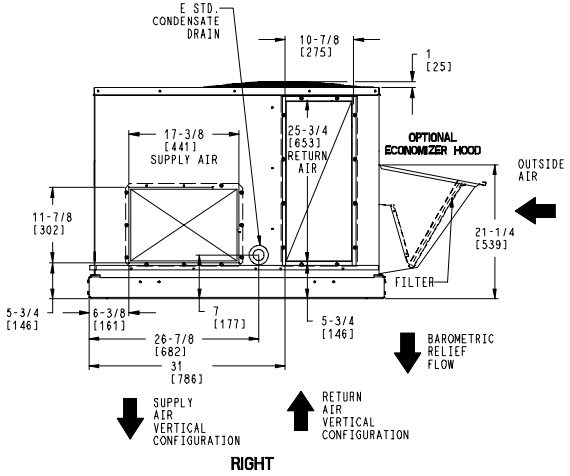

ITC CLASSIFICATION	SHEET	DATE	SUPERCEDES			REV
U.S. ECCN:NSR	1 OF 3	9/9/24	9/15/23	50GEQ 04-06 SINGLE PACKAGE HEAT PUMP	48TC006647	A

Certified Drawing for ID 9

Project: Climatec - City of Esc - Fire Station 1
Prepared By: Shawn Harlan

04/12/2025
07:47AM

UNIT	STD. UNIT WEIGHT *		CORNER WEIGHT (A)		CORNER WEIGHT (B)		CORNER WEIGHT (C)		CORNER WEIGHT (D)		C.G.		HEIGHT
	LBS.	KG.	LBS.	KG.	LBS.	KG.	LBS.	KG.	LBS.	KG.	X	Y	Z
50GEQ*04	475	215	128	58	120	54	110	50	117	53	36 [914]	22 3/8 [568]	16 1/8 [410]
50GEQ*05	594	269	163	74	148	67	135	61	149	68	35 3/8 [898]	22 5/16 [557]	16 1/2 [419]
50GEQ*06	596	270	163	74	148	67	135	61	149	68	35 3/8 [898]	22 5/16 [557]	16 1/2 [419]

*- STANDARD UNIT WEIGHT IS WITHOUT ELECTRIC HEAT AND WITHOUT PACKAGING.
FOR OTHER OPTIONS AND ACCESSORIES REFER TO THE PRODUCT DATA CATALOG.

Carrier
THIS DOCUMENT IS THE PROPERTY OF CARRIER CORPORATION AND IS DELIVERED UPON THE EXPRESS CONDITION THAT THE CONTENTS WILL NOT BE DISCLOSED OR USED WITHOUT CARRIER CORPORATION'S WRITTEN CONSENT.
SUBMISSION OF THESE DRAWINGS OR DOCUMENTS DOES NOT CONSTITUTE PART PERFORMANCE OR ACCEPTANCE OF CONTRACT.

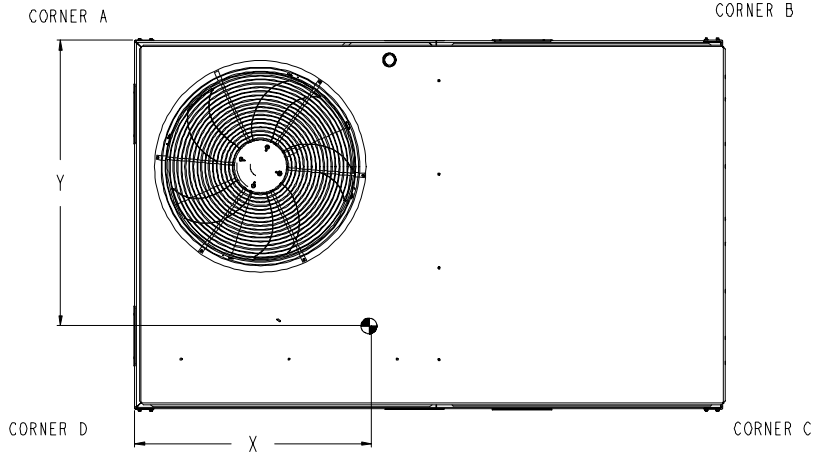

TOP

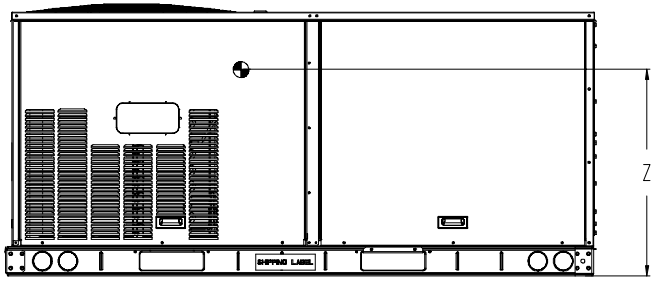

FRONT

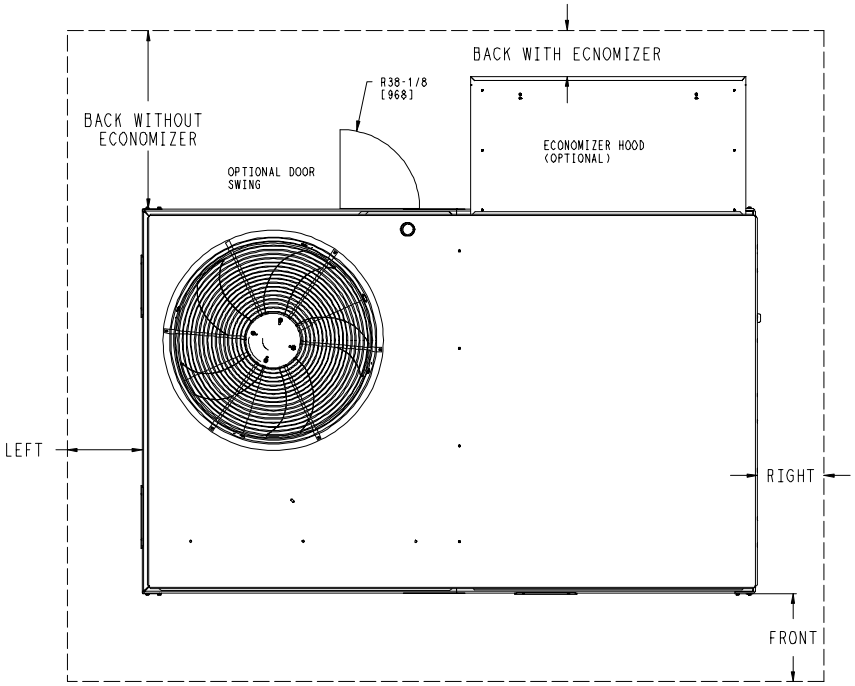

NOTE:

1. FOR ALL MINIMUM CLEARANCES LOCAL CODES OR JURISDICTIONS MAY PREVAIL.

	CLEARANCE		
	SERVICE WITH:	SERVICE WITH:	OPERATING
SURFACE	CONDUCTIVE BARRIER	NONCONDUCTIVE BARRIER	CLEARANCE
FRONT	48 [1219mm]	36 [914mm]	18 [457mm]
LEFT	48 [1219mm]	42 [1067mm]	18 [457mm]
BACK W/O ECON	48 [1219mm]	42 [1067mm]	18 [457mm]
BACK W/ECON	36 [914mm]	36 [914mm]	18 [457mm]
RIGHT	36 [914mm]	36 [914mm]	18 [457mm]
TOP	72 [1829mm]	72 [1829mm]	72 [1829mm]

ITC CLASSIFICATION	SHEET	DATE	SUPERCEDES			REV
U.S. ECCN:NSR	2 OF 3	9/9/24	9/15/23	50GEQ 04-06 SINGLE PACKAGE HEAT PUMP	48TC006647	A

Carrier | THIS DOCUMENT IS THE PROPERTY OF CARRIER CORPORATION AND IS DELIVERED UPON THE EXPRESS CONDITION THAT THE CONTENTS WILL NOT BE DISCLOSED OR USED WITHOUT CARRIER CORPORATION'S WRITTEN CONSENT. | SUBMISSION OF THESE DRAWINGS OR DOCUMENTS DOES NOT CONSTITUTE PART PERFORMANCE OR ACCEPTANCE OF CONTRACT.

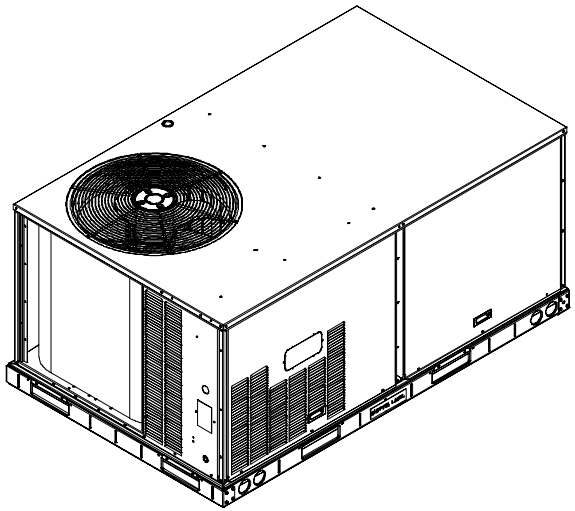

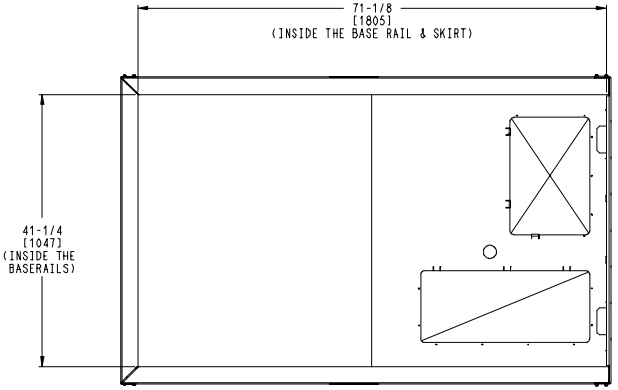

INSIDE BASERAIL DIMENSIONS
BOTTOM

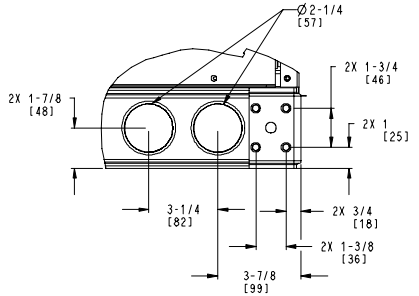

DETAIL **C**
TYP 4 PLCS

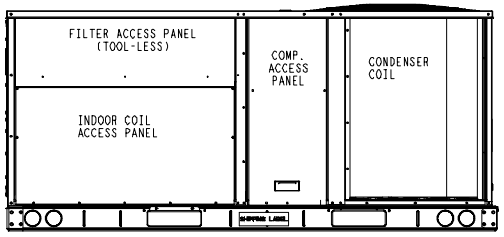

BACK

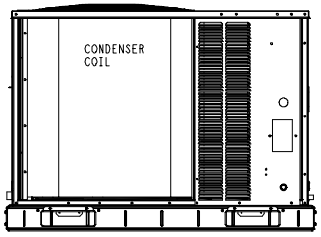

LEFT

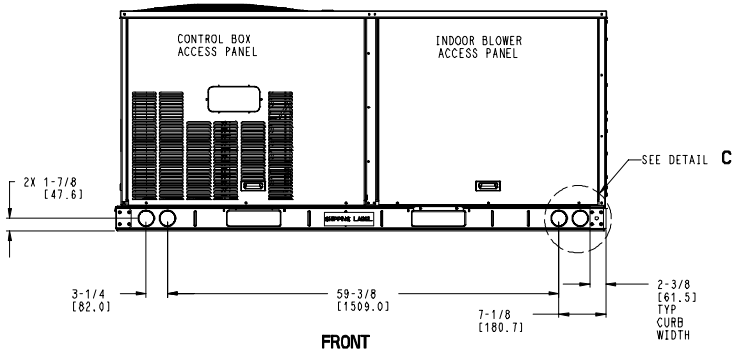

FRONT

ITC CLASSIFICATION	SHEET	DATE	SUPERCEDES			REV
U.S. ECCN:NSR	3 OF 3	9/9/24	9/15/23	50GEQ 04-06 SINGLE PACKAGE HEAT PUMP	48TC006647	A

Performance Summary For ID 9

Project: Climatec - City of Esc - Fire Station 1 04/12/2025
Prepared By: Shawn Harlan 07:47AM

Part Number:50GEQM06A2M5-0A0A0

Refrigerant:	**R-454B**	
ARI SEER:	**17.00**	
ARI SEER2:	**16.00**	
Application EER (Rooftop Unit only):	**11.92**	

Base Unit Dimensions

Unit Length:	**74.4**	in
Unit Width:	**46.6**	in
Unit Height:	**41.4**	in

Operating Weight

Base Unit Weight:	**596**	lb
Al/Cu - Al/Cu - Louvered Hail Guards:	**17**	lb
Total Operating Weight:	**613**	lb

Unit

Unit Voltage-Phase-Hertz:	**208-3-60**	
Air Discharge:	**Horizontal**	
Fan Drive Type:	**Direct Drive**	
Actual Airflow:	**2000**	CFM
Site Altitude:	**0**	ft

Cooling Performance

Condenser Entering Air DB:	**95.0**	F
Evaporator Entering Air DB:	**80.0**	F
Evaporator Entering Air WB:	**67.0**	F
Entering Air Enthalpy:	**31.44**	BTU/lb
Evaporator Leaving Air DB:	**57.3**	F
Evaporator Leaving Air WB:	**57.1**	F
Evaporator Leaving Air Enthalpy:	**24.49**	BTU/lb
Unit Discharge Air DB:	**58.4**	F
Unit Discharge Air WB:	**57.6**	F
Unit Discharge Air Enthalpy:	**24.76**	BTU/lb
Gross Cooling Capacity:	**62.53**	MBH
Net Cooling Capacity:	**60.07**	MBH
Gross Sensible Capacity:	**49.01**	MBH
Net Sensible Capacity:	**46.55**	MBH
Compressor Power Input:	**4.02**	kW
Coil Bypass Factor:	**0.014**	

Heating Performance

Outdoor Ambient Temperature:	**47.0**	F
Entering Air Indoor Coil DB:	**70.0**	F
Leaving Air Indoor Coil DB:	**95.2**	F
Total Heating Capacity:	**54.50**	MBH
Integrated Heating Capacity:	**54.50**	MBH
Heating Power Input:	**4.20**	kW
High Temperature COP:	**3.80**	
Low Temperature COP:	**2.50**	
HSPF:	**7.2**	
High Temperature COP2:	**3.80**	
Low Temperature COP2:	**2.50**	
HSPF2:	**7.2**	

Supply Fan

External Static Pressure:	**1.00**	in wg
Fan RPM:	**1995**	
Fan Power:	**0.85**	BHP

Performance Summary For ID 9

Project: Climatec - City of Esc - Fire Station 1 04/12/2025
Prepared By: Shawn Harlan 07:47AM

NOTE: **Selected IFM RPM Range: 1197 - 2390**

Selection includes construction throwaway filter into the base fan curve. This filter is not MERV Rated.

Electrical Data

Voltage Range:	**187 - 253**
Compressor #1 RLA:	**15.4**
Compressor #1 LRA:	**150**
Indoor Fan Motor Type:	**MED**
Indoor Fan Motor FLA (Total):	**9.2**
Power Supply MCA:	**30**
Power Supply MOCP (Fuse or HACR):	**45**
Disconnect Size FLA:	**30**
Disconnect Size LRA:	**166**
Electrical Convenience Outlet:	**None**
Outdoor Fan [Qty / FLA (ea)]:	**1 / 1.3**

Control Panel SCCR: 5kA RMS at Rated Symmetrical Voltage

Acoustics

Sound Power Levels, db re 10E-12 Watts

	Discharge	Inlet	Outdoor
63 Hz	91.7	90.2	85.6
125 Hz	82.8	79.0	84.7
250 Hz	76.9	72.0	80.5
500 Hz	73.4	65.7	76.0
1000 Hz	70.0	67.9	72.4
2000 Hz	67.1	58.7	68.0
4000 Hz	63.8	52.5	62.8
8000 Hz	60.1	46.3	59.3
A-Weighted	76.6	72.0	79.0

Advanced Acoustics

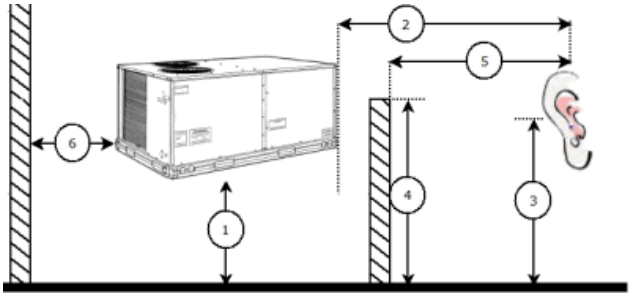

Advanced Accoustics Parameters

1. Unit height above ground:	**30.0**	ft
2. Horizontal distance from unit to receiver:	**50.0**	ft
3. Receiver height above ground:	**5.7**	ft
4. Height of obstruction:	**0.0**	ft
5. Horizontal distance from obstruction to receiver:	**0.0**	ft
6. Horizontal distance from unit to obstruction:	**0.0**	ft

Detailed Acoustics Information

Performance Summary For ID 9

Project: Climatec - City of Esc - Fire Station 1 04/12/2025
Prepared By: Shawn Harlan 07:47AM

Octave Band Center Freq. Hz	63	125	250	500	1k	2k	4k	8k	Overall
A	85.6	84.7	80.5	76.0	72.4	68.0	62.8	59.3	89.2 Lw
B	59.4	68.6	71.9	72.8	72.4	69.2	63.8	58.2	78.5 LwA
C	53.2	52.3	48.1	43.6	40.0	35.6	30.4	26.9	56.8 Lp
D	27.0	36.2	39.5	40.4	40.0	36.8	31.4	25.8	46.1 LpA

Legend
A Sound Power Levels at Unit's Acoustic Center, Lw
B A-Weighted Sound Power Levels at Unit's Acoustic Center, LwA
C Sound Pressure Levels at Specific Distance from Unit, Lp
D A-Weighted Sound Pressure Levels at Specific Distance from Unit, LpA

Calculation methods used in this program are patterned after the ASHRAE Guide; other ASHRAE Publications and the AHRI Acoustical Standards. While a very significant effort has been made to insure the technical accuracy of this program, it is assumed that the user is knowledgeable in the art of system sound estimation and is aware of the tolerances involved in real world acoustical estimation. This program makes certain assumptions as to the dominant sound sources and sound paths which may not always be appropriate to the real system being estimated. Because of this, no assurances can be offered that this software will always generate an accurate sound prediction from user supplied input data. If in doubt about the estimation of expected sound levels in a space, an Acoustical Engineer or a person with sound prediction expertise should be consulted.

Fan Curve

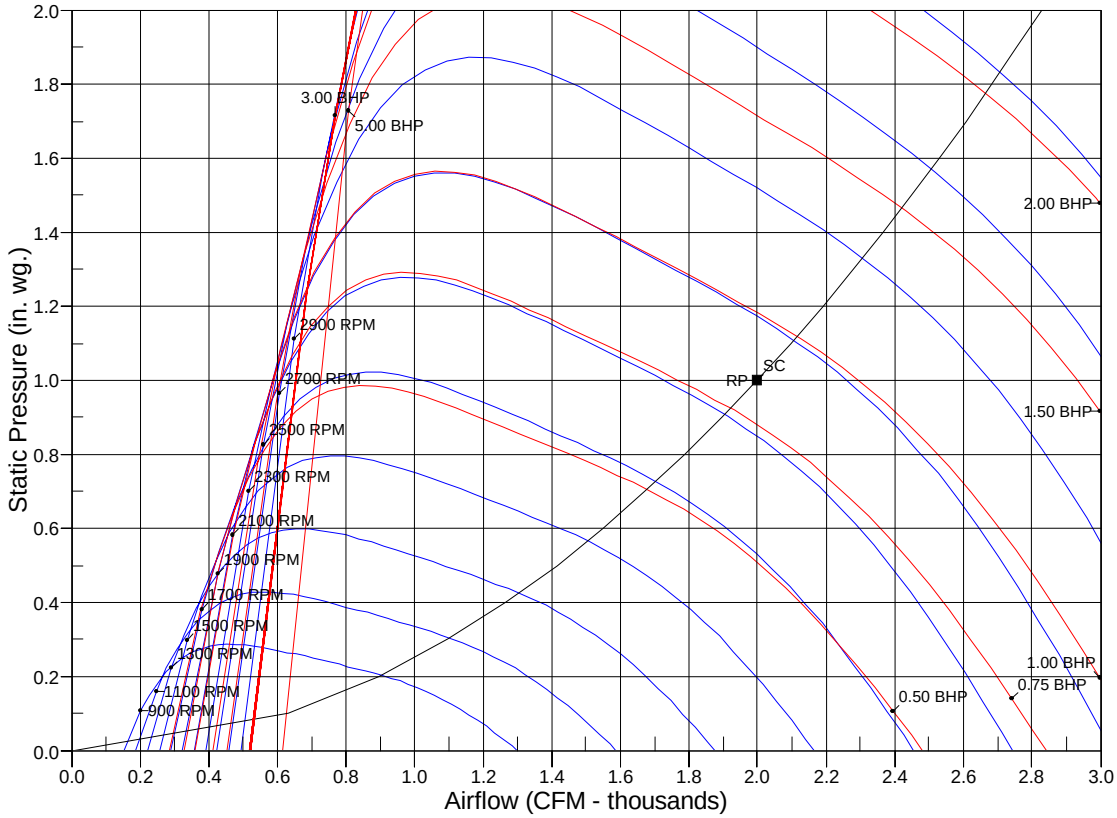

RPM = 1995 BHP = 0.85 Maximum RPM = 2836 Maximum BHP = 3.00
SC - System Curve RP - Rated Point

Outdoor Unit Heat Pump Ductless System

Outdoor Model: **37MARAQ24AA3**

Carrier

Turn to the experts

Job Data: _____ **Location:** _____

Tag #: _____ **Carrier#:** _____

Date: _____

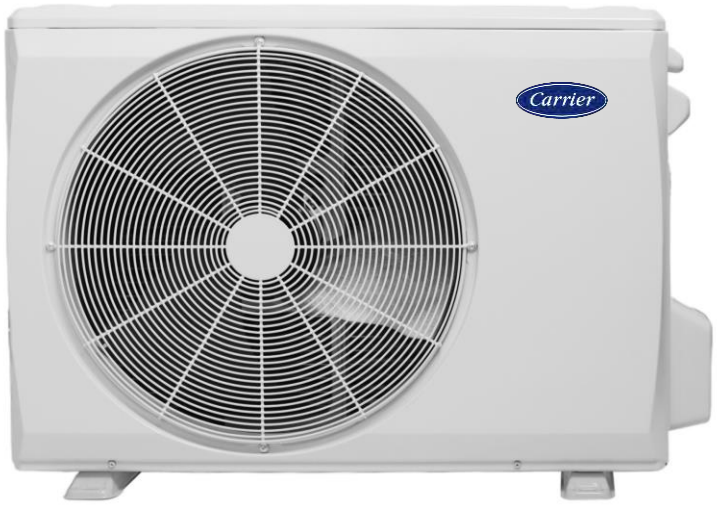

OUTDOOR STANDARD FEATURES

- Variable Speed (Inverter)
- Factory installed Base Pan Heater
- Factory installed Crankcase Heater
- Low Voltage Controls
- Auto-Restart function
- Condenser High Temp Protection
- Quiet operation
- Anti-corrosive fin coating

RESIDENTIAL APPLICATION LIMITED WARRANTY*

- Ten (10) years if properly registered within ninety (90) days after original installation, parts are warranted to the original purchaser for a period of ten (10) years. Otherwise, parts warranty is five (5) years.

NOTE: Images for illustration purposes only. Actual models may be slightly different.

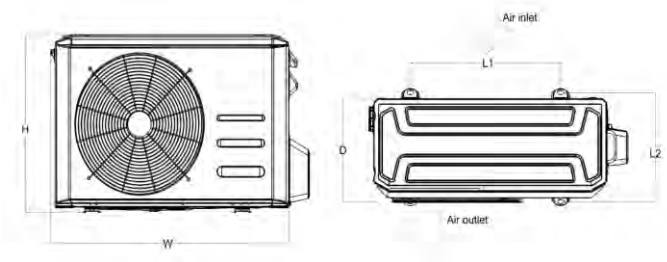

OUTDOOR UNIT DIMENSIONS						
Capacity	**Unit**	**W**	**D**	**H**	**L1**	**L2**
9K/12K	mm	765	303	555	452.4	313.82
	inch	30.12	11.93	21.85	17.81	12.36
18K	mm	890	342	673	663	379.59
	inch	35.04	13.46	26.5	26.1	14.94
24K ~ 36K	mm	946	410	810	672.96	454.8
	inch	37.24	16.14	31.89	26.49	17.19

Outdoor - Heat Pump			
System	**Outdoor Model #**		37MARAQ24AA3
	Outdoor Size		24000
Electrical	Voltage, Phase, Cycle	V/Ph/Hz	208-230/1/60
	MCA	A.	24
	MOPA	A.	25
	SCCR	kA	5
Operating Range	Cooling Outdoor DB Min - Max	°F(°C)	-13~122(-25～50)
	Heating Outdoor DB Min - Max	°F(°C)	-13~75(-25～24)
Piping	Min. Piping Length	ft (m)	9.8 (3)
	Standard Piping Length	ft. (m)	24.6 (7.5)
	Total Piping Length	ft (m)	164.04(50)
	Piping Lift*	ft (m)	82.02(25)
	Pipe Connection Size - Liquid	in (mm)	3/8in(9.52mm)
	Pipe Connection Size - Suction	in (mm)	5/8in(15.9mm)
Refrigerant	Refrigerant Type		R454B
	Charge	lbs (kg)	4.41(2.0)
	Add'l Refrigerant (between Std & Max Piping Lengths)	Oz/ft (g/m)	0.32(30)
Outdoor Coil	Face Area	Sq. Ft.	8.18
	No. Rows		2.6
	Fins per inch		20
	Circuits		6
Compressor	Type		ROTARY
	Model		KTM240D46UKT2
	Oil Type		ESTER OIL
	Oil Charge	Fl. Oz.	20.97
	Rated Current	RLA	1.05
Airflow & Sound	Airflow	CFM	2237.9
	Sound Pressure	dB(A)	58
Dimensions	Height	in (mm)	31.89(810)
	Width	in (mm)	37.24(946)
	Depth	in (mm)	16.14(410)
	Net Weight	lbs (kg)	122.14(55.4)
	Shipping Height	in (mm)	34.84(885)
	Shipping Width	in (mm)	42.91(1090)
	Shipping Depth	in (mm)	19.68(500)
	Shipping Net Weight	lbs (kg)	132.28(60)

*** Condensing unit above or below indoor unit**

AHRI CERTIFIED www.ahridirectory.org Unitary Small HP AHRI Standard 210/240

C SP US

Puron Advance™

Carrier Corporation Copyright 2024 • Atlanta, GA, 30339
SUBJECT TO CHANGE WITHOUT NOTICE

Outdoor Unit Heat Pump Ductless System

Outdoor Model: **37MARAQ30AA3**

Carrier

Turn to the experts

Job Data: _____ **Location:** _____

Tag #: _____ **Carrier#:** _____

Date: _____

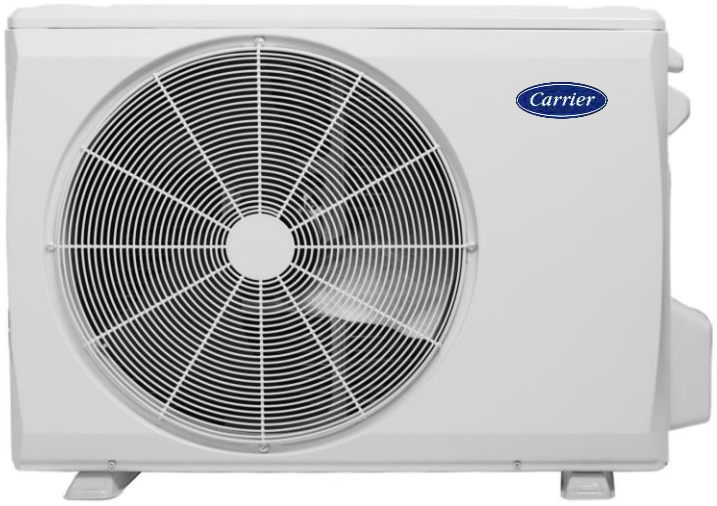

OUTDOOR STANDARD FEATURES

- Variable Speed (Inverter)
- Factory installed Base Pan Heater
- Factory installed Crankcase Heater
- Low Voltage Controls
- Auto-Restart function
- Condenser High Temp Protection
- Quiet operation
- Anti-corrosive fin coating

RESIDENTIAL APPLICATION LIMITED WARRANTY*

- Ten (10) years if properly registered within ninety (90) days after original installation, parts are warranted to the original purchaser for a period of ten (10) years. Otherwise, parts warranty is five (5) years.

NOTE: Images for illustration purposes only. Actual models may be slightly different.

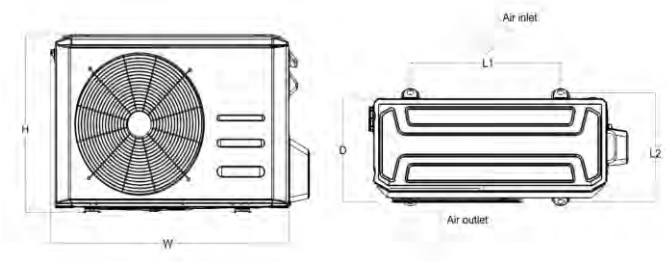

OUTDOOR UNIT DIMENSIONS						
Capacity	**Unit**	**W**	**D**	**H**	**L1**	**L2**
9K/12K	mm	765	303	555	452.4	313.82
	inch	30.12	11.93	21.85	17.81	12.36
18K	mm	890	342	673	663	379.59
	inch	35.04	13.46	26.5	26.1	14.94
24K ~ 36K	mm	946	410	810	672.96	454.8
	inch	37.24	16.14	31.89	26.49	17.19

Outdoor - Heat Pump			
System	**Outdoor Model #**		37MARAQ30AA3
	Outdoor Size		30000
Electrical	Voltage, Phase, Cycle	V/Ph/Hz	208-230/1/60
	MCA	A.	28
	MOPA	A.	30
	SCCR	kA	5
Operating Range	Cooling Outdoor DB Min - Max	°F(°C)	5~122(-15~50)
	Heating Outdoor DB Min - Max	°F(°C)	5~75(-15~24)
Piping	Min. Piping Length	ft (m)	9.8 (3)
	Standard Piping Length	ft. (m)	24.6 (7.5)
	Total Piping Length	ft (m)	164.04(50)
	Piping Lift*	ft (m)	82.02(25)
	Pipe Connection Size - Liquid	in (mm)	3/8in(9.52mm)
	Pipe Connection Size - Suction	in (mm)	5/8in(15.9mm)
Refrigerant	Refrigerant Type		R454B
	Charge	lbs (kg)	5.29(2.4)
	Add'l Refrigerant (between Std & Max Piping Lengths)	Oz/ft (g/m)	0.32(30)
Outdoor Coil	Face Area	Sq. Ft.	8.14
	No. Rows		3
	Fins per inch		19
	Circuits		6
Compressor	Type		ROTARY
	Model		KTF250D22UMT
	Oil Type		ESTER OIL
	Oil Charge	Fl. Oz.	22.66
	Rated Current	RLA	1.21
Airflow & Sound	Airflow	CFM	2237.9
	Sound Pressure	dB(A)	61
Dimensions	Height	in (mm)	31.89(810)
	Width	in (mm)	37.24(946)
	Depth	in (mm)	16.14(410)
	Net Weight	lbs (kg)	142.86(64.8)
	Shipping Height	in (mm)	34.84(885)
	Shipping Width	in (mm)	42.91(1090)
	Shipping Depth	in (mm)	19.68(500)
	Shipping Net Weight	lbs (kg)	154.54(70.1)

*** Condensing unit above or below indoor unit**

AHRI CERTIFIED www.ahridirectory.org Unitary Small HP AHRI Standard 210/240

Puron Advance™

Carrier Corporation Copyright 2024 • Atlanta, GA, 30339
SUBJECT TO CHANGE WITHOUT NOTICE

Outdoor Unit Heat Pump Ductless System

Outdoor Model: 37MARAQ36AA3

Turn to the experts

Job Data: _____ **Location:** _____

Tag #: _____ **Carrier#:** _____

Date: _____

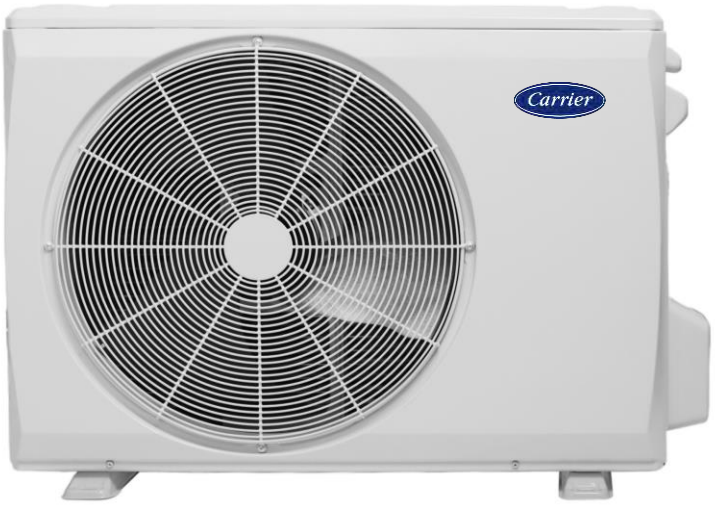

OUTDOOR STANDARD FEATURES
- Variable Speed (Inverter)
- Factory installed Base Pan Heater
- Factory installed Crankcase Heater
- Low Voltage Controls
- Auto-Restart function
- Condenser High Temp Protection
- Quiet operation
- Anti-corrosive fin coating

RESIDENTIAL APPLICATION LIMITED WARRANTY*
- Ten (10) years if properly registered within ninety (90) days after original installation, parts are warranted to the original purchaser for a period of ten (10) years. Otherwise, parts warranty is five (5) years.

NOTE: Images for illustration purposes only. Actual models may be slightly different.

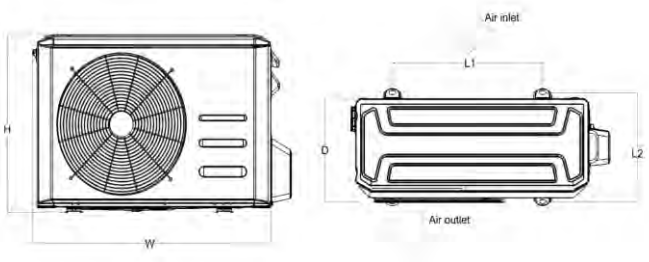

OUTDOOR UNIT DIMENSIONS						
Capacity	**Unit**	**W**	**D**	**H**	**L1**	**L2**
9K/12K	mm	765	303	555	452.4	313.82
	inch	30.12	11.93	21.85	17.81	12.36
18K	mm	890	342	673	663	379.59
	inch	35.04	13.46	26.5	26.1	14.94
24K ~ 36K	mm	946	410	810	672.96	454.8
	inch	37.24	16.14	31.89	26.49	17.19

Outdoor - Heat Pump			
System	**Outdoor Model #**		37MARAQ36AA3
	Outdoor Size		36000
Electrical	Voltage, Phase, Cycle	V/Ph/Hz	208-230/1/60
	MCA	A.	33
	MOPA	A.	35
	SCCR	kA	5
Operating Range	Cooling Outdoor DB Min - Max	°F(°C)	5~122(-15~50)
	Heating Outdoor DB Min - Max	°F(°C)	5~75(-15~24)
Piping	Min. Piping Length	ft (m)	9.8 (3)
	Standard Piping Length	ft. (m)	24.6 (7.5)
	Total Piping Length	ft (m)	213.25(65)
	Piping Lift*	ft (m)	98.43(30)
	Pipe Connection Size - Liquid	in (mm)	3/8in(9.52mm)
	Pipe Connection Size - Suction	in (mm)	5/8in(15.9mm)
Refrigerant	Refrigerant Type		R454B
	Charge	lbs (kg)	7.05(3.2)
	Add'l Refrigerant (between Std & Max Piping Lengths)	Oz/ft (g/m)	0.32(30)
Outdoor Coil	Face Area	Sq. Ft.	8.14
	No. Rows		3
	Fins per inch		19
	Circuits		6
Compressor	Type		ROTARY
	Model		KTF250D22UMT
	Oil Type		ESTER OIL
	Oil Charge	Fl. Oz.	22.66
	Rated Current	RLA	1.21
Airflow & Sound	Airflow	CFM	2237.9
	Sound Pressure	dB(A)	63
Dimensions	Height	in (mm)	31.89(810)
	Width	in (mm)	37.24(946)
	Depth	in (mm)	16.14(410)
	Net Weight	lbs (kg)	150.36(68.2)
	Shipping Height	in (mm)	34.84(885)
	Shipping Width	in (mm)	42.91(1090)
	Shipping Depth	in (mm)	19.68(500)
	Shipping Net Weight	lbs (kg)	160.28(72.7)

*** Condensing unit above or below indoor unit**

Carrier Corporation Copyright 2024 • Atlanta, GA, 30339
SUBJECT TO CHANGE WITHOUT NOTICE

AHRI CERTIFIED www.ahridirectory.org Unitary Small HP AHRI Standard 210/240

Puron Advance™

Air Handler Heat Pump Ductless System

Indoor Model: 45MBAAQ24XB3

Turn to the experts

Job Data:

Tag #:

Date:

Location:

Carrier#:

INDOOR STANDARD FEATURES

- Modes: Cool, Heat, Dry, Fan, Auto
- 4-way installation (Up flow, Down flow, Right, Left)
- Auto-Restart function
- Quiet indoor operation
- Aluminum hydrophilic pre-coated fins

RESIDENTIAL APPLICATION LIMITED WARRANTY*

- Ten (10) years if properly registered within ninety (90) days after original installation, parts are warranted to the original purchaser for a period of ten (10) years. Otherwise, parts warranty is five (5) years.

NOTE: Images for illustration purposes only. Actual models may be slightly different.

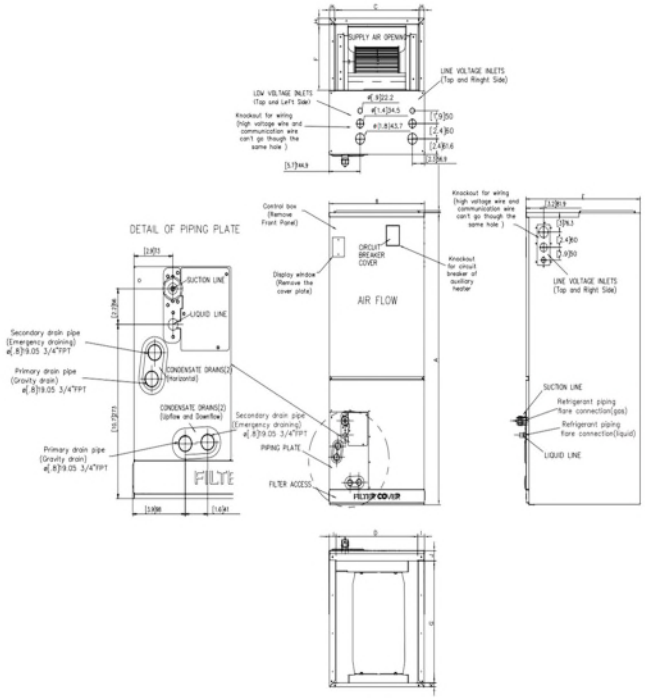

45MBAAQ24XB3			
System	**Indoor Model #**		45MBAAQ24XB3
	Indoor Size		24000
Electrical	Voltage, Phase, Cycle	V/Ph/Hz	208-230/1/60
	Power Supply		Indoor unit powered by outdoor unit
	MCA	A.	4
Operating Range	Cooling Indoor DB Min - Max	°F(°C)	60~90 (16～32)
	Heating Indoor DB Min - Max	°F(°C)	32~86 (0～30)
Indoor Coil	Face Area	Sq. Ft.	3
	No. Rows		3
	Fins per inch		20
	Circuits		6
Indoor Unit	Number of Fan Speeds		550/510/450
	Airflow (highest to lowest)	CFM	824.0 / 759.3 / 694.5 / 629.8 / -
	Sound Pressure (highest to lowest)	dB(A)	N\A/43.5/40/25.5/N\A
Dimensions	Height	in (mm)	45.00(1143)
	Width	in (mm)	17.52(445)
	Depth	in (mm)	21.02(534)
	Net Weight	lbs (kg)	104.28(47.3)
	Shipping Height	in (mm)	21.20(640)
	Shipping Width	in (mm)	48.23(1225)
	Shipping Depth	in (mm)	21.06(535)
	Shipping Net Weight	lbs (kg)	125.88(57.1)
CONTROLS			
Standard	Wireless Remote Controller (°F/°C Convertible)		
Optional	Wired Remote Control 7 Day Programmable		KSACN1401AAA
	24V Mini Interface		KSAIC0601230

INDOOR UNIT DIMENSIONS

Dimensions		18K/24K		36K	
		Inch	mm	Inch	mm
A	Model Height	45	1143	49	1245
B	Model Width	17.5	445	21	534
C	S.A. Opening Width	15.6	397	19.1	486
D	R.A. Opening Width	15.1	384	18.6	473
E	Model Depth	21	534	21	534
F	S.A. Opening Depth	10.3	260	10.3	260
G	R.A. Opening Depth	18.8	476	18.8	476
H	S.A. Opening Clearance	0.9	24	0.9	24
I	R.A. Opening Side Clearance	1.3	32	1.3	32
J	R.A. Opening Front Clearance	1.5	38	1.6	41
K	R.A. Opening Back Clearance	0.6	16	0.6	16

Carrier Corporation Copyright 2024 • Atlanta, GA, 30339
SUBJECT TO CHANGE WITHOUT NOTICE

Puron Advance™

Air Handler Heat Pump Ductless System

Indoor Model: 45MBAAQ30XB3

Turn to the experts

Job Data:

Tag #:

Date:

Location:

Carrier#:

INDOOR STANDARD FEATURES

- Modes: Cool, Heat, Dry, Fan, Auto
- 4-way installation (Up flow, Down flow, Right, Left)
- Auto-Restart function
- Quiet indoor operation
- Aluminum hydrophilic pre-coated fins

RESIDENTIAL APPLICATION LIMITED WARRANTY*

- Ten (10) years if properly registered within ninety (90) days after original installation, parts are warranted to the original purchaser for a period of ten (10) years. Otherwise, parts warranty is five (5) years.

NOTE: Images for illustration purposes only. Actual models may be slightly different.

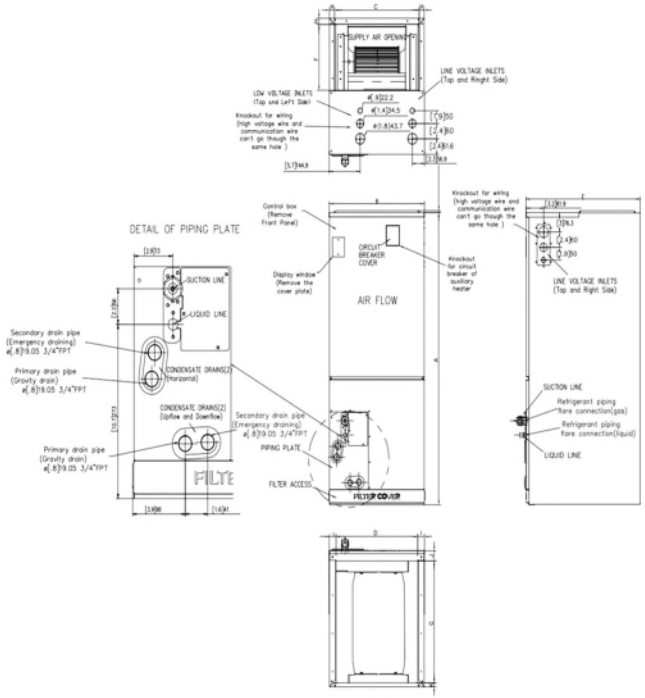

45MBAAQ30XB3			
System	**Indoor Model #**		45MBAAQ30XB3
	Indoor Size		30000
Electrical	Voltage, Phase, Cycle	V/Ph/Hz	208-230/1/60
	Power Supply		Indoor unit powered by outdoor unit
	MCA	A.	6
Operating Range	Cooling Indoor DB Min - Max	°F(°C)	60~90 (16～32)
	Heating Indoor DB Min - Max	°F(°C)	32~86 (0～30)
Indoor Coil	Face Area	Sq. Ft.	4.13
	No. Rows		4
	Fins per inch		20
	Circuits		10
Indoor Unit	Number of Fan Speeds		685/620/560
	Airflow (highest to lowest)	CFM	988.8 / 894.7 / 806.4 / 712.2 / N\A
	Sound Pressure (highest to lowest)	dB(A)	N\A/44/41/26/N\A
Dimensions	Height	in (mm)	49.02(1245)
	Width	in (mm)	21.02(534)
	Depth	in (mm)	21.02(534)
	Net Weight	lbs (kg)	127.43(57.8)
	Shipping Height	in (mm)	21.20(640)
	Shipping Width	in (mm)	52.17(1325)
	Shipping Depth	in (mm)	24.61(625)
	Shipping Net Weight	lbs (kg)	151.68(68.8)
CONTROLS			
Standard	Wireless Remote Controller (°F/°C Convertible)		
Optional	Wired Remote Control 7 Day Programmable		KSACN1401AAA
	24V Mini Interface		KSAIC0601230

INDOOR UNIT DIMENSIONS

Dimensions		18K/24K		36K	
		Inch	mm	Inch	mm
A	Model Height	45	1143	49	1245
B	Model Width	17.5	445	21	534
C	S.A. Opening Width	15.6	397	19.1	486
D	R.A. Opening Width	15.1	384	18.6	473
E	Model Depth	21	534	21	534
F	S.A. Opening Depth	10.3	260	10.3	260
G	R.A. Opening Depth	18.8	476	18.8	476
H	S.A. Opening Clearance	0.9	24	0.9	24
I	R.A. Opening Side Clearance	1.3	32	1.3	32
J	R.A. Opening Front Clearance	1.5	38	1.6	41
K	R.A. Opening Back Clearance	0.6	16	0.6	16

Carrier Corporation Copyright 2024 • Atlanta, GA, 30339
SUBJECT TO CHANGE WITHOUT NOTICE

Puron Advance™

Air Handler Heat Pump Ductless System

Indoor Model: 45MBAAQ36XB3

Turn to the experts

Job Data:

Tag #:

Date:

Location:

Carrier#:

INDOOR STANDARD FEATURES

- Modes: Cool, Heat, Dry, Fan, Auto
- 4-way installation (Up flow, Down flow, Right, Left)
- Auto-Restart function
- Quiet indoor operation
- Aluminum hydrophilic pre-coated fins

RESIDENTIAL APPLICATION LIMITED WARRANTY*

- Ten (10) years if properly registered within ninety (90) days after original installation, parts are warranted to the original purchaser for a period of ten (10) years. Otherwise, parts warranty is five (5) years.

NOTE: Images for illustration purposes only. Actual models may be slightly different.

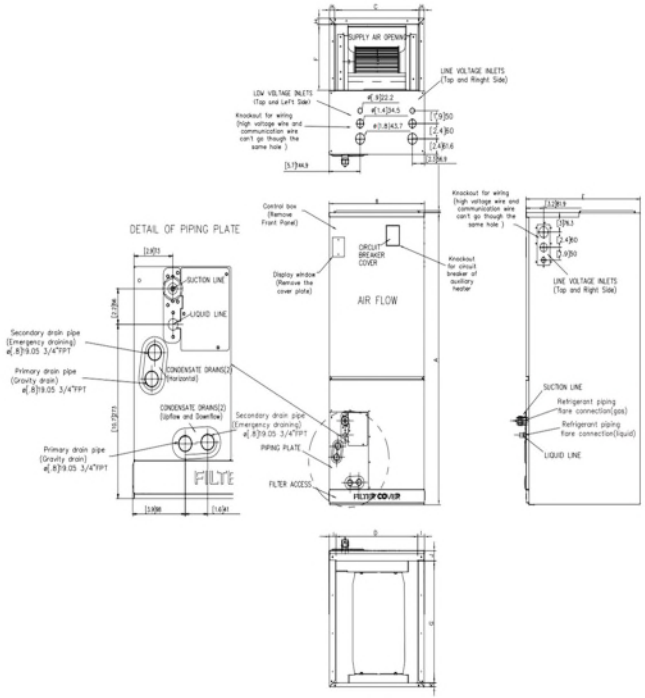

45MBAAQ36XB3			
System	**Indoor Model #**		45MBAAQ36XB3
	Indoor Size		36000
Electrical	Voltage, Phase, Cycle	V/Ph/Hz	208-230/1/60
	Power Supply		Indoor unit powered by outdoor unit
	MCA	A.	6
Operating Range	Cooling Indoor DB Min - Max	°F(°C)	60~90 (16～32)
	Heating Indoor DB Min - Max	°F(°C)	32~86 (0～30)
Indoor Coil	Face Area	Sq. Ft.	4.13
	No. Rows		4
	Fins per inch		20
	Circuits		10
Indoor Unit	Number of Fan Speeds		685/620/560
	Airflow (highest to lowest)	CFM	1189.0 / 1083.0 / 971.2 / 865.2 / N\A
	Sound Pressure (highest to lowest)	dB(A)	N\A/48/44/35/N\A
Dimensions	Height	in (mm)	49.02(1245)
	Width	in (mm)	21.02(534)
	Depth	in (mm)	21.02(534)
	Net Weight	lbs (kg)	127.87(58)
	Shipping Height	in (mm)	21.20(640)
	Shipping Width	in (mm)	52.17(1325)
	Shipping Depth	in (mm)	24.61(625)
	Shipping Net Weight	lbs (kg)	154.10(69.9)
CONTROLS			
Standard	Wireless Remote Controller (°F/°C Convertible)		
Optional	Wired Remote Control 7 Day Programmable		KSACN1401AAA
	24V Mini Interface		KSAIC0601230

INDOOR UNIT DIMENSIONS

Dimensions		18K/24K		36K	
		Inch	mm	Inch	mm
A	Model Height	45	1143	49	1245
B	Model Width	17.5	445	21	534
C	S.A. Opening Width	15.6	397	19.1	486
D	R.A. Opening Width	15.1	384	18.6	473
E	Model Depth	21	534	21	534
F	S.A. Opening Depth	10.3	260	10.3	260
G	R.A. Opening Depth	18.8	476	18.8	476
H	S.A. Opening Clearance	0.9	24	0.9	24
I	R.A. Opening Side Clearance	1.3	32	1.3	32
J	R.A. Opening Front Clearance	1.5	38	1.6	41
K	R.A. Opening Back Clearance	0.6	16	0.6	16

Carrier Corporation Copyright 2024 • Atlanta, GA, 30339
SUBJECT TO CHANGE WITHOUT NOTICE

Puron Advance™

SUBMITTAL

Project

Climatec - City of Esc - Fire Station 2

Date

Saturday, April 12, 2025

Shawn Harlan
Sigler - Brea
205 Puente Street
Brea CA

Table Of Contents

Project: Climatec - City of Esc - Fire Station 2 04/12/2025
Prepared By: Shawn Harlan

ID 5 **3**
Unit Report 4
Performance Summary 6
System Parameters 6
Electrical Data 6
Acoustic Summary 7
Certified Drawing 8

ID 5

Submittal Cover Sheet
Unit Report
Performance Summary Report
Acoustic Summary
Certified Drawings

Unit Report For ID 5

Project: Climatec - City of Esc - Fire Station 2
Prepared By: Shawn Harlan

04/12/2025

Outdoor Unit Parameters

Unit Model:	**27SCA**	
Unit Size:	**3 Tons (Size 36)**	
Voltage:	**208/230-3-60**	V-Ph-Hz

Indoor Coil Parameters

Unit Model:	**F55A**	
Unit Size:	**Size (36) 36,000 Btuh**	
Cabinet Insulation:	**Singular, TXV**	
Voltage:	**115-1-60**	V-Ph-Hz
Refrigerant Type:	**Puron Advance**	
Heating Size:	**No Heat**	

Outdoor Unit Dimensions and Weight

Unit Length:	**31.1875**	in
Unit Width:	**31.1875**	in
Unit Height:	**32.0625**	in
Unit Shipping Weight:	**193.**	lb

Indoor Coil Dimensions and Weight

Unit Length:	**22.0625**	in
Unit Width:	**17.625**	in
Unit Height:	**49.625**	in
Unit Shipping Weight:	**148.**	lb

RESIDENTIAL APPLICATIONS
This warranty is to the original purchasing owner and subsequent owners only to the extent and as stated in the Warranty Conditions and below. The limited warranty period in years, depending on the part and the claimant, is as shown in the table below.

Limited Warranty (Years)		
Item	**Original Owner**	**Subsequent Owner**
Parts	10* (or 5)	5
Compressor	10* (or 5)	5

***If properly registered within 90 days of original installation, otherwise 5 years (except in California and Quebec and other jurisdictions that prohibit warranty benefits conditioned on registration). See Warranty Conditions below.**

OTHER APPLICATIONS
The warranty period is five (5) years on the compressor, and one (1) year on all other parts. The warranty is the original owner only and is not available for subsequent owners.

Ordering Information

Part Number	Description	Quantity
Outdoor Unit		
27SCA536A005	27SCA Comfort Single Stage Heat Pump with Puron Refrigerant Advanced 3 Tons Cooling	1
	15 SEER @ ARI Conditions	
Indoor Coil		
F55AAXB36L00	F55A 115V Base Series Fan Coil for Puron Advance 3 Tons Cooling 115-1-60	1
	Singular, TXV	
	Aluminum	

The Product and Ratings Data in this program is subject to change at any time and without notice. Please refer to the latest product literature and the AHRI directory at www.ahridirectory.org for the most up-to-date information.

Unit Report For ID 5

Project: Climatec - City of Esc - Fire Station 2 04/12/2025
Prepared By: Shawn Harlan

Performance Summary For ID 5

Project: Climatec - City of Esc - Fire Station 2 04/12/2025
Prepared By: Shawn Harlan

System Performance

System:	**27SCA/F55A**	
System Quantity:	**1**	
Altitude:	**0.0**	ft
Linear Pipe Length:	**0.0**	ft
COP @ 47 F:	**3.72**	
COP @ 17 F:	**2.52**	
SEER @ ARI Conditions:	**14.5**	
EER @ ARI Conditions:	**12.0**	
HSPF @ ARI Conditions:	**7.5**	

Actual Clg Airflow:	**1200.0**	CFM
Standard Clg Airflow:	**1200.0**	CFM
Total Net Clg Capacity:	**34.73**	MBH
Net Sensible Clg Capacity:	**26.33**	MBH
Htg HP Capacity:	**34.47**	MBH
Htg HP Integrated Capacity:	**34.47**	MBH
Heating HP Compressor Power:	**2.68**	kW
Total System Power:	**2.89**	kW

System Parameters

Outdoor Unit Parameters

Unit Model:	**27SCA536A005**	
Unit Size (Nominal):	**3 Tons (Size 36)**	
Voltage:	**208/230-3-60**	V-Ph-Hz
Clg Ent Air DB Ambient:	**95.0**	°F
Htg Ent Air DB Ambient:	**47.0**	°F

Indoor Coil Parameters

Unit Model:	**F55AAXB36L00**	
Unit Size (Nominal):	**Size (36) 36,000 Btuh**	
Voltage:	**115-1-60**	V-Ph-Hz
Ent Air DB:	**80.00**	°F
Ent Air WB:	**67.00**	°F
Ent Enthalpy:	**31.44**	BTU/lb
Lvg Air DB:	**59.68**	°F
Lvg Air WB:	**57.96**	°F
Lvg Enthalpy:	**25.01**	BTU/lb
Htg Ent Air DB:	**70.0**	°F
Htg Lvg Air DB:	**96.6**	°F
Heating Size (Nominal):	**No Heat**	
Total External Static Pressure:	**0.75**	in wg

Electrical Data

Outdoor Electrical Data

Unit Voltage:	**208/230-3-60**	V-Ph-Hz
Fan Motor FLA:	**1.20**	Amps
MCA:	**12.5**	Amps
Max Fuse:	**20**	Amps
Operating Range Min:	**187**	V
Operating Range Max:	**253**	V
Compressor RLA:	**9.0**	Amps
Compressor LRA:	**70.0**	Amps

Indoor Electrical Data:

(For units with no factory installed electric heaters)

Unit Voltage:	**115-1-60**	V-Ph-Hz
Unit FLA:	**6.5**	Amps
Unit MCA:	**8.2**	Amps
Unit MOCP:	**15.0**	Amps
Unit Min Wire Size:	**14.0**	
Unit Fuse/Ckt Bkr Amps:	**15.0**	Amps
Motor HP:	**1/2**	HP

Notice: Indoor Elect. data is for 115-1-60 voltage

The Product and Ratings Data in this program is subject to change at any time and without notice. Please refer to the latest product literature and the AHRI directory at www.ahridirectory.org for the most up-to-date information.

Acoustic Summary For ID 5

Project: Climatec - City of Esc - Fire Station 2 04/12/2025
Prepared By: Shawn Harlan

Outdoor Unit Parameters:

Unit Model: **27SCA**
Unit Size: **3 Tons (Size 36)**
Variations: **Standard**

Octave Band Center Frequency, Hz	125	250	500	1k	2k	4k	8k	dBA
Sound Power,dB	70.6	69.9	68.5	66.0	63.1	59.0	53.2	
A-Weighted Sound Power, dBA								76.0

Indoor Coil Parameters:

Unit Model: **F55A**
Unit Size: **Size (36) 36,000 Btuh**
Cabinet Insulation: **Singular, TXV**

Octave Band Center Frequency, Hz	63	125	250	500	1k	2k	4k
Sound Power,dB	73.8	69.8	65.8	62.8	60.8	58.8	54.8

The Product and Ratings Data in this program is subject to change at any time and without notice. Please refer to the latest product literature and the AHRI directory at www.ahridirectory.org for the most up-to-date information.

Certified Drawing For ID 5

Project: Climatec - City of Esc - Fire Station 2
Prepared By: Shawn Harlan

04/12/2025

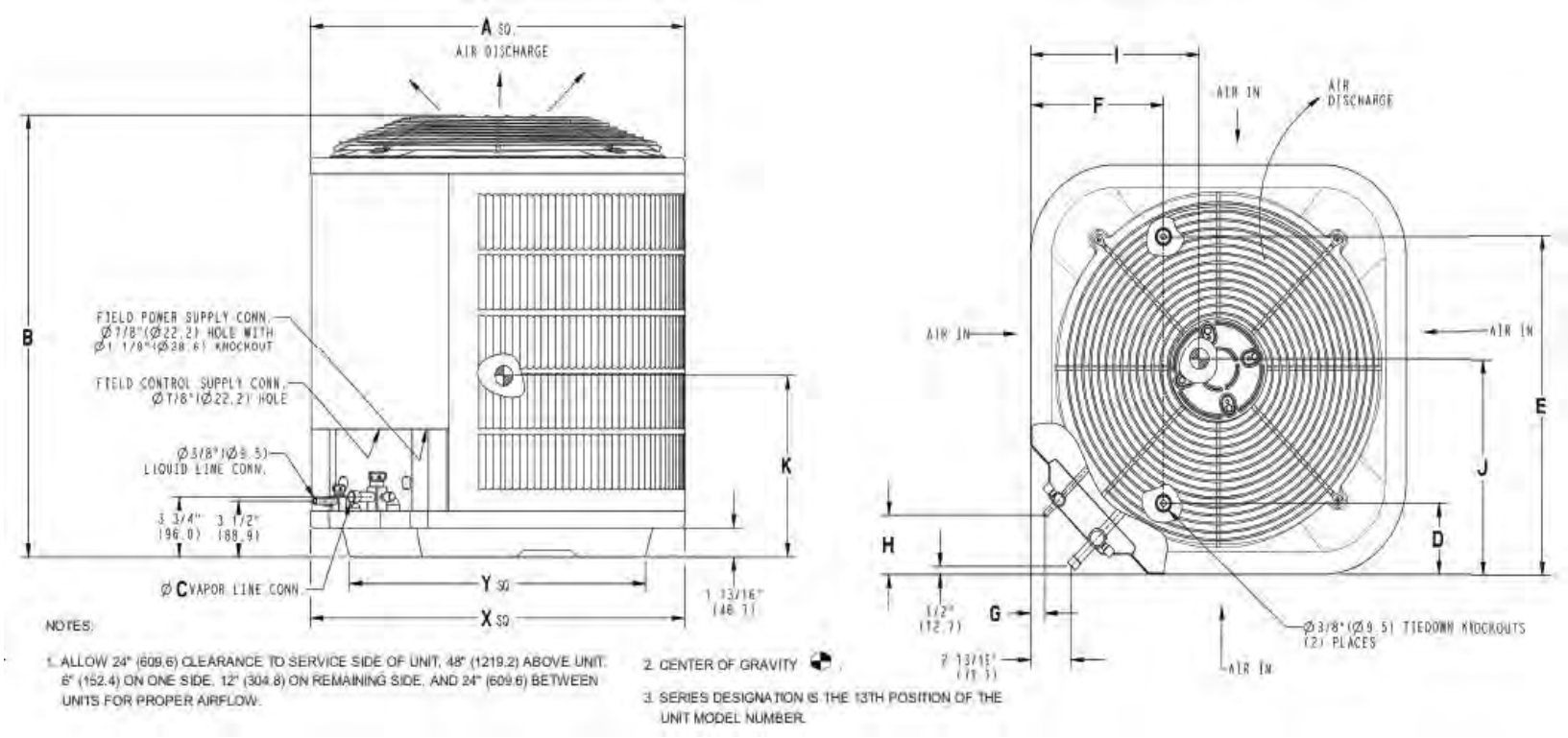

Outdoor Model

Unit Model:	**27SCA**	
Unit Size:	**3 Tons (Size 36)**	
Voltage:	**208/230-3-60**	V-Ph-Hz
SEER:	**15**	
PartNumber:	**27SCA536A005**	

Shipping Dimensions and Weights	Outdoor Unit
Height	36.44 in
Width	34.25 in
Length	34.25 in
Operating Weight	173. lb
Shipping Weight	193. lb

Dimensions										
A	B	C	D	E	F	G	H	I	J	K
31.19 in	32.06 in	0.75 in	6.56 in	24.69 in	9.13 in	1.13 in	3.81 in	12.00 in	14.13 in	16.25 in

The Product and Ratings Data in this program is subject to change at any time and without notice. Please refer to the latest product literature and the AHRI directory at www.ahridirectory.org for the most up-to-date information.

Certified Drawing For ID 5

Project: Climatec - City of Esc - Fire Station 2
Prepared By: Shawn Harlan

04/12/2025

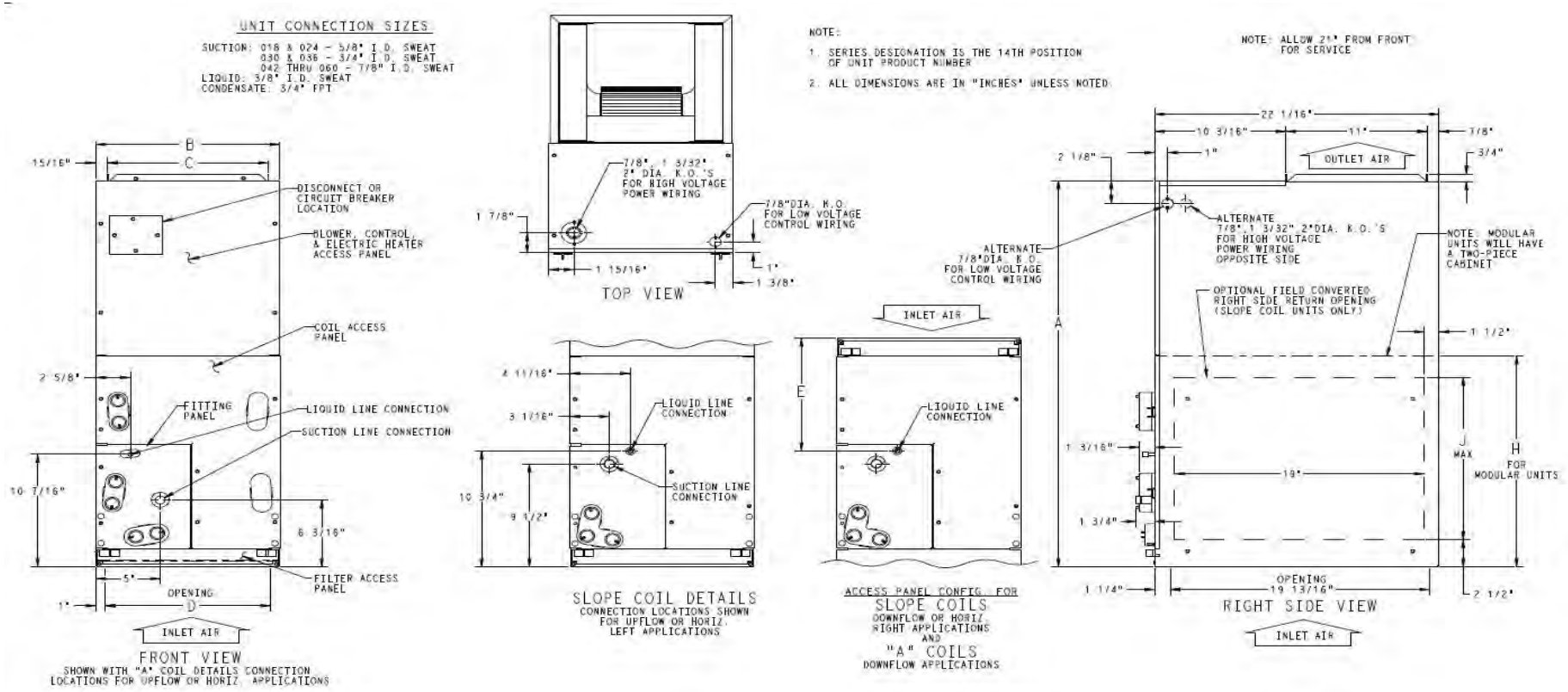

Indoor Coil

Unit Model: **F55A**
Unit Size: **Size (36) 36,000 Btuh**
Voltage: **115-1-60** V-Ph-Hz
Cabinet Insulation: **Singular, TXV**
PartNumber: **F55AAXB36L00**

Dimensions and Weights	Indoor Coil
Height	49.63 in
Width	17.63 in
Length	22.06 in
Shipping Weight	148. lb

Dimensions								
A	B	C	D	E	F	G	H	J
49.63 in	17.63 in	15.75 in	15.63 in	15.88 in	23.13 in	23.50 in	--	--

The Product and Ratings Data in this program is subject to change at any time and without notice. Please refer to the latest product literature and the AHRI directory at www.ahridirectory.org for the most up-to-date information.

Certified Drawing For ID 5

Project: Climatec - City of Esc - Fire Station 2
Prepared By: Shawn Harlan

04/12/2025

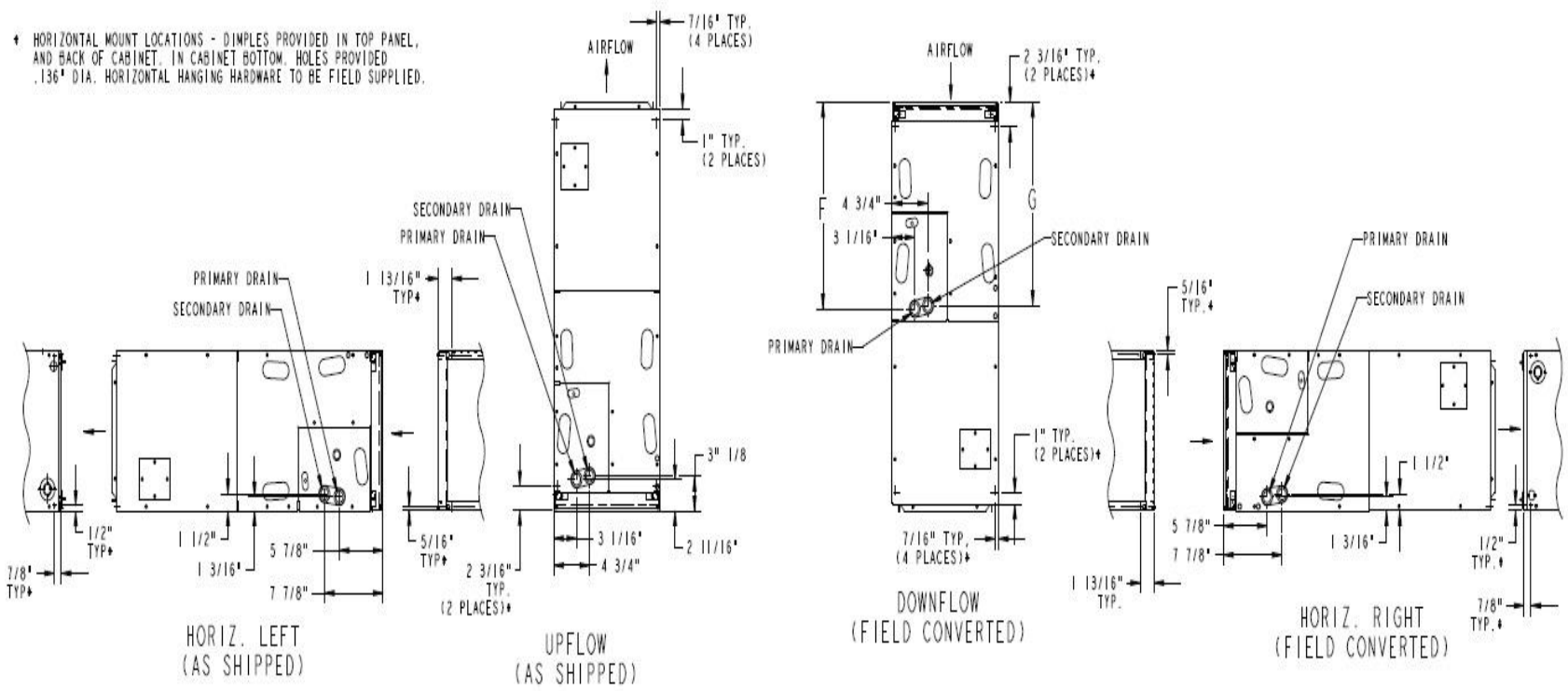

A-COIL

Indoor Coil

Unit Model:	**F55A**	
Unit Size:	**Size (36) 36,000 Btuh**	
Voltage:	**115-1-60**	V-Ph-Hz
PartNumber:	**F55AAXB36L00**	

The Product and Ratings Data in this program is subject to change at any time and without notice. Please refer to the latest product literature and the AHRI directory at www.ahridirectory.org for the most up-to-date information.

SUBMITTAL

Project

Climatec - City of Esc - Fire Station 3

Date

Saturday, April 12, 2025

Shawn Harlan
Sigler - Brea
205 Puente Street
Brea CA

Table Of Contents

Project: Climatec - City of Esc - Fire Station 3 04/12/2025
Prepared By: Shawn Harlan 08:11AM

ID 2 **3**
Unit Report 4
Certified Drawing 5
Performance Summary 8
ID 3,4,7 **11**
Unit Report 12
Certified Drawing 13
Performance Summary 16
ID 6 **19**
Unit Report 20
Certified Drawing 21
Performance Summary 24

ID 2

Tag Cover Sheet
Unit Report
Certified Drawing
Performance Report

Unit Report For ID 2

Project: Climatec - City of Esc - Fire Station 3 04/12/2025
Prepared By: Shawn Harlan 08:11AM

Unit Parameters

Unit Model: **50GEQM06A2M5-0A0A0**
Unit Size: **06 (5 Tons)**
Volts-Phase-Hertz: **208-3-60**
Heating Type: **Heat Pump**
Refrigerant: **R-454B**
Heat Control: **Two Stage Cooling, Single Circuit**
Duct Cfg: **Vertical Supply / Vertical Return**

Dimensions (ft. in.) & Weight (lb.) ***

Unit Length: **6' 2.375"**
Unit Width: **3' 10.625"**
Unit Height: **3' 5.375"**
Total Operating Weight: **613** lb

*** Weights and Dimensions are approximate. Weight does not include unit packaging. Approximate dimensions are provided primarily for shipping purposes. For exact dimensions and weights, refer to appropriate product data catalog.

Lines and Filters

Return Air Filter Type: **Throwaway**
Return Air Filter Quantity: **4**
Return Air Filter Size: **16 x 16 x 2**

Selection includes construction throwaway filter into the base fan curve.

Unit Configuration

Standard/Medium Static - EcoBlue Vane Axial Fan
Al/Cu - Al/Cu - Louvered Hail Guards
Standard Electromechanical Controls (can be used with field installed economizers and dampers)
Standard

Warranty Information

5-Year compressor parts (STD.)
1-Year parts (STD.)

No optional warranties were selected.

NOTE: Please see Warranty Catalog 500-089 for explanation of policies and ordering methods.

Ordering Information

Part Number	Description	Quantity
50GEQM06A2M5-0A0A0	Rooftop Unit	1

Certified Drawing for ID 2

Project: Climatec - City of Esc - Fire Station 3
Prepared By: Shawn Harlan

04/12/2025
08:11AM

NOTES:

1. DIMENSIONS ARE IN INCHES, DIMENSIONS IN [ ] ARE IN MILLIMETERS.
2. CENTER OF GRAVITY
3. DIRECTION OF AIR FLOW
4. ALL VIEW DRAWN USING 3RD ANGLE

UNIT	J	K
50GEQ*04	33 3/8 [847]	18 5/8 [472]
50GEQ*05	41 3/8 [1051]	14 7/8 [378]
50GEQ*06	41 3/8 [1051]	14 7/8 [378]

Carrier
THIS DOCUMENT IS THE PROPERTY OF CARRIER CORPORATION AND IS DELIVERED UPON THE EXPRESS CONDITION THAT THE CONTENTS WILL NOT BE DISCLOSED OR USED WITHOUT CARRIER CORPORATION'S WRITTEN CONSENT.
SUBMISSION OF THESE DRAWINGS OR DOCUMENTS DOES NOT CONSTITUTE PART PERFORMANCE OR ACCEPTANCE OF CONTRACT.

	CONNECTION SIZES
A	1 3/8" [35] DIA FIELD POWER SUPPLY HOLE
B	2" [51] DIA POWER SUPPLY KNOCKOUT
C	1 3/4" [44] DIA GAUGE ACCESS PLUG
D	7/8" [22] DIA FIELD CONTROL WIRING HOLE
E	3/4"-14 NPT CONDENSATE DRAIN
G	2 1/2 " [64] DIA POWER SUPPLY KNOCK-OUT

THRU-THE-BASE CHART
THESE HOLES REQUIRED FOR USE CRBTMPWR008A00, 009A00

	THREADED CONDUIT SIZE	WIRE USE	REQ'D HOLE SIZES (MAX.)
W	1/2"	115V	7/8" [22.2]
X	1/2"	24V	7/8" [22.2]
Y *	3/4"	POWER	1 1/8" [28.6]
Z**	(009A00) 1/2" FPT	GAS	1 1/8" [28.6]
	FOR "THRU-THE-BASEPAN" FACTORY OPTION, FITTINGS FOR ONLY X,Y, & Z ARE PROVIDED		
*	SELECT EITHER 3/4" OR 1/2" FOR POWER, DEPENDING ON WIRE SIZE		
**	(008A00) PROVIDES 3/4" FPT THRU CURB FLANGE & FITTING.		

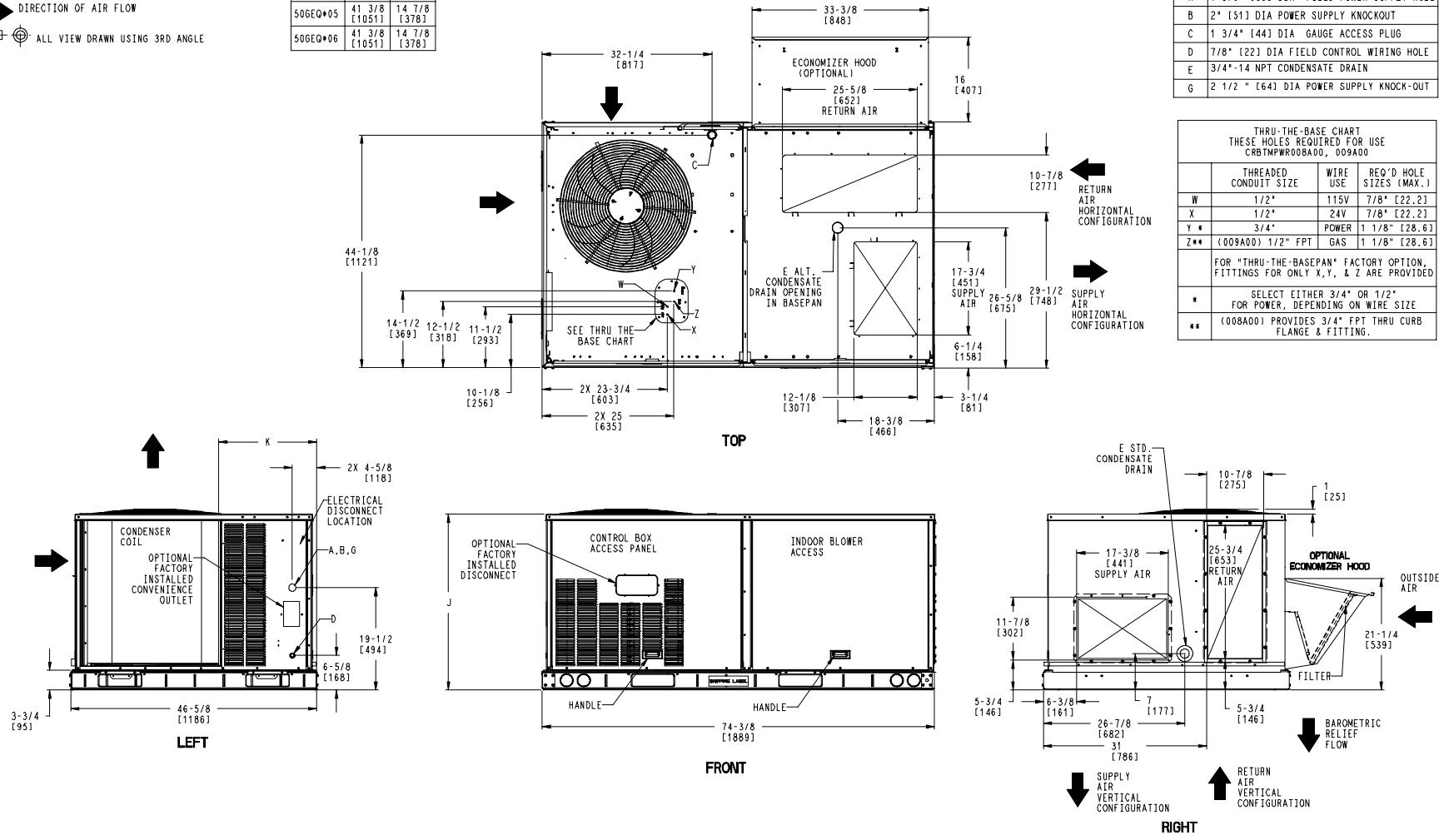

ITC CLASSIFICATION	SHEET	DATE	SUPERCEDES			REV
U.S. ECCN:NSR	1 OF 3	9/9/24	9/15/23	50GEQ 04-06 SINGLE PACKAGE HEAT PUMP	48TC006647	A

Certified Drawing for ID 2

Project: Climatec - City of Esc - Fire Station 3
Prepared By: Shawn Harlan

04/12/2025
08:11AM

UNIT	STD. UNIT WEIGHT *		CORNER WEIGHT (A)		CORNER WEIGHT (B)		CORNER WEIGHT (C)		CORNER WEIGHT (D)		C.G.		HEIGHT
	LBS.	KG.	LBS.	KG.	LBS.	KG.	LBS.	KG.	LBS.	KG.	X	Y	Z
50GEQ*04	475	215	128	58	120	54	110	50	117	53	36 [914]	22 3/8 [568]	16 1/8 [410]
50GEQ*05	594	269	163	74	148	67	135	61	149	68	35 3/8 [898]	22 5/16 [557]	16 1/2 [419]
50GEQ*06	596	270	163	74	148	67	135	61	149	68	35 3/8 [898]	22 5/16 [557]	16 1/2 [419]

*- STANDARD UNIT WEIGHT IS WITHOUT ELECTRIC HEAT AND WITHOUT PACKAGING.
FOR OTHER OPTIONS AND ACCESSORIES REFER TO THE PRODUCT DATA CATALOG.

Carrier
THIS DOCUMENT IS THE PROPERTY OF CARRIER CORPORATION AND IS DELIVERED UPON THE EXPRESS CONDITION THAT THE CONTENTS WILL NOT BE DISCLOSED OR USED WITHOUT CARRIER CORPORATION'S WRITTEN CONSENT.
SUBMISSION OF THESE DRAWINGS OR DOCUMENTS DOES NOT CONSTITUTE PART PERFORMANCE OR ACCEPTANCE OF CONTRACT.

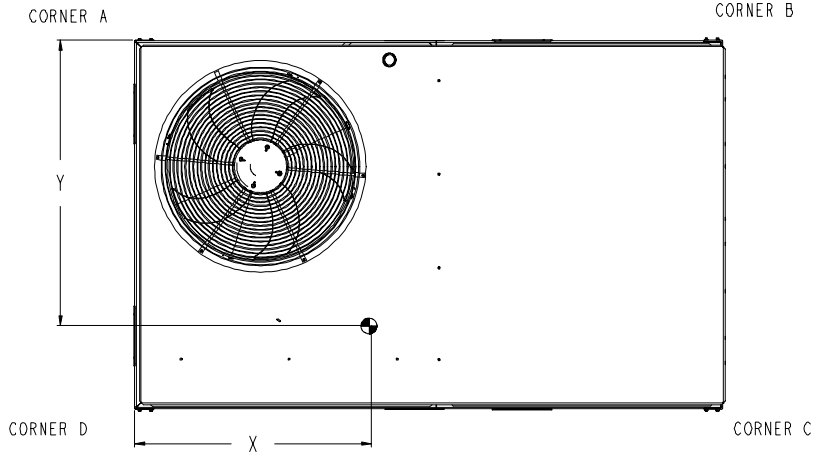

TOP

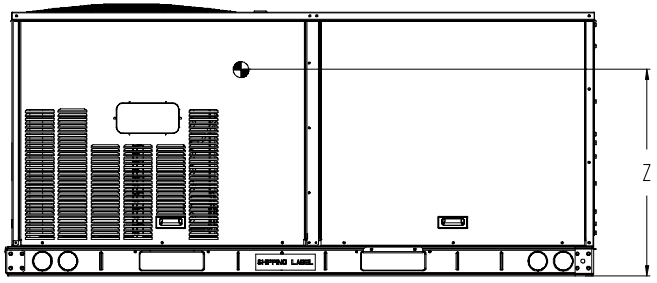

FRONT

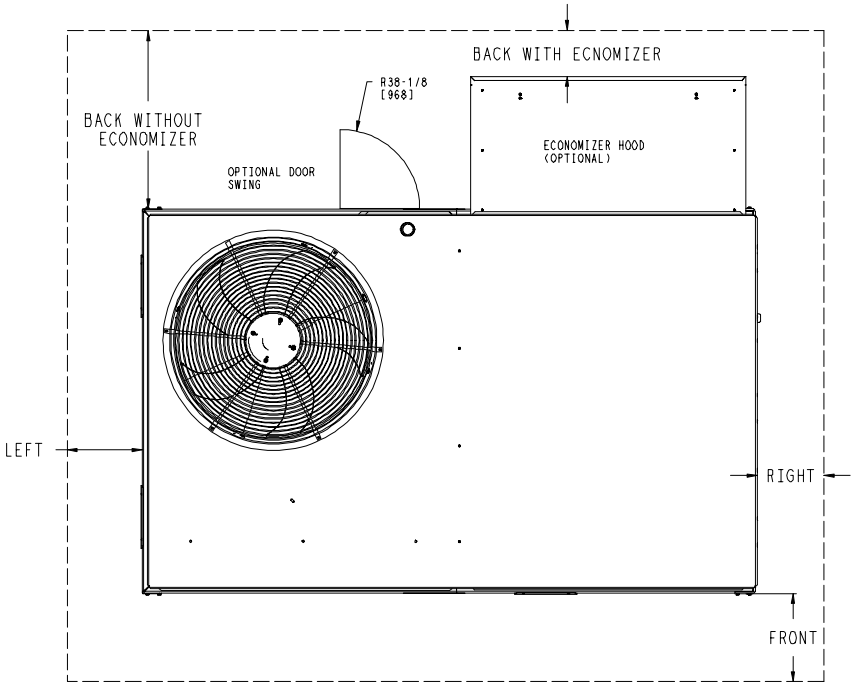

NOTE:

1. FOR ALL MINIMUM CLEARANCES LOCAL CODES OR JURISDICTIONS MAY PREVAIL.

	CLEARANCE		
	SERVICE WITH:	SERVICE WITH:	OPERATING
SURFACE	CONDUCTIVE BARRIER	NONCONDUCTIVE BARRIER	CLEARANCE
FRONT	48 [1219mm]	36 [914mm]	18 [457mm]
LEFT	48 [1219mm]	42 [1067mm]	18 [457mm]
BACK W/O ECON	48 [1219mm]	42 [1067mm]	18 [457mm]
BACK W/ECON	36 [914mm]	36 [914mm]	18 [457mm]
RIGHT	36 [914mm]	36 [914mm]	18 [457mm]
TOP	72 [1829mm]	72 [1829mm]	72 [1829mm]

ITC CLASSIFICATION	SHEET	DATE	SUPERCEDES			REV
U.S. ECCN:NSR	2 OF 3	9/9/24	9/15/23	50GEQ 04-06 SINGLE PACKAGE HEAT PUMP	48TC006647	A

Certified Drawing for ID 2

Project: Climatec - City of Esc - Fire Station 3
Prepared By: Shawn Harlan

04/12/2025
08:11AM

Carrier | THIS DOCUMENT IS THE PROPERTY OF CARRIER CORPORATION AND IS DELIVERED UPON THE EXPRESS CONDITION THAT THE CONTENTS WILL NOT BE DISCLOSED OR USED WITHOUT CARRIER CORPORATION'S WRITTEN CONSENT. | SUBMISSION OF THESE DRAWINGS OR DOCUMENTS DOES NOT CONSTITUTE PART PERFORMANCE OR ACCEPTANCE OF CONTRACT.

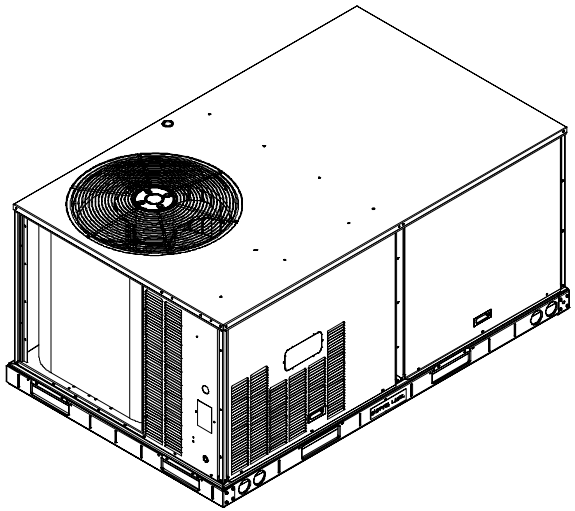

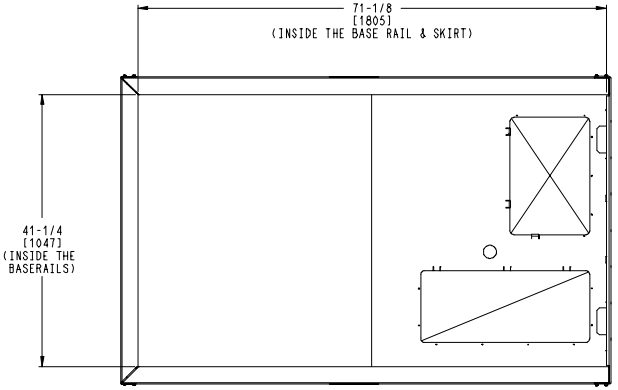

INSIDE BASERAIL DIMENSIONS
BOTTOM

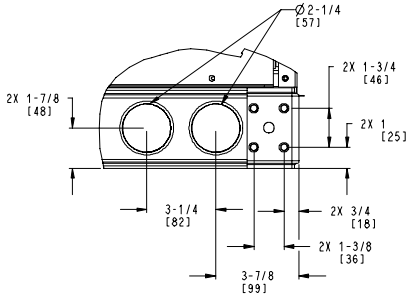

DETAIL **C**
TYP 4 PLCS

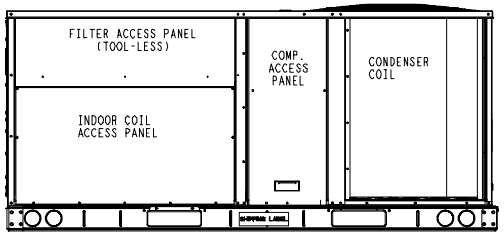

BACK

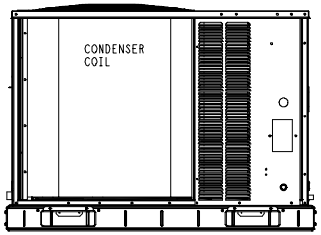

LEFT

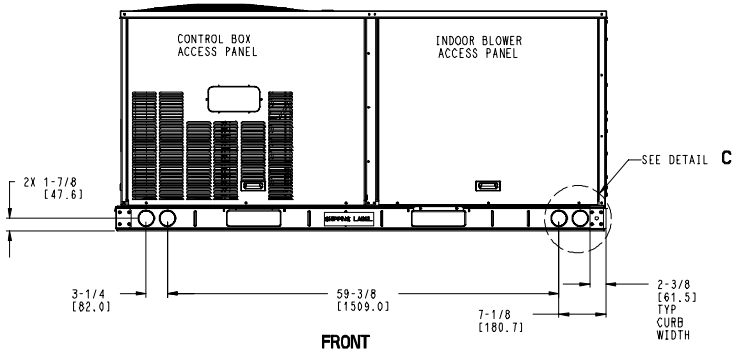

FRONT

ITC CLASSIFICATION	SHEET	DATE	SUPERCEDES			REV
U.S. ECCN:NSR	3 OF 3	9/9/24	9/15/23	50GEQ 04-06 SINGLE PACKAGE HEAT PUMP	48TC006647	A

Performance Summary For ID 2

Project: Climatec - City of Esc - Fire Station 3 04/12/2025
Prepared By: Shawn Harlan 08:11AM

Part Number:50GEQM06A2M5-0A0A0

Refrigerant:	**R-454B**	
ARI SEER:	**17.00**	
ARI SEER2:	**16.00**	
Application EER (Rooftop Unit only):	**11.77**	

Base Unit Dimensions

Unit Length:	**74.4**	in
Unit Width:	**46.6**	in
Unit Height:	**41.4**	in

Operating Weight

Base Unit Weight:	**596**	lb
Al/Cu - Al/Cu - Louvered Hail Guards:	**17**	lb
Total Operating Weight:	**613**	lb

Unit

Unit Voltage-Phase-Hertz:	**208-3-60**	
Air Discharge:	**Vertical**	
Fan Drive Type:	**Direct Drive**	
Actual Airflow:	**2000**	CFM
Site Altitude:	**0**	ft

Cooling Performance

Condenser Entering Air DB:	**95.0**	F
Evaporator Entering Air DB:	**80.0**	F
Evaporator Entering Air WB:	**67.0**	F
Entering Air Enthalpy:	**31.44**	BTU/lb
Evaporator Leaving Air DB:	**57.3**	F
Evaporator Leaving Air WB:	**57.1**	F
Evaporator Leaving Air Enthalpy:	**24.49**	BTU/lb
Unit Discharge Air DB:	**58.5**	F
Unit Discharge Air WB:	**57.6**	F
Unit Discharge Air Enthalpy:	**24.78**	BTU/lb
Gross Cooling Capacity:	**62.53**	MBH
Net Cooling Capacity:	**59.91**	MBH
Gross Sensible Capacity:	**49.01**	MBH
Net Sensible Capacity:	**46.39**	MBH
Compressor Power Input:	**4.02**	kW
Coil Bypass Factor:	**0.014**	

Heating Performance

Outdoor Ambient Temperature:	**47.0**	F
Entering Air Indoor Coil DB:	**70.0**	F
Leaving Air Indoor Coil DB:	**95.2**	F
Total Heating Capacity:	**54.50**	MBH
Integrated Heating Capacity:	**54.50**	MBH
Heating Power Input:	**4.20**	kW
High Temperature COP:	**3.80**	
Low Temperature COP:	**2.50**	
HSPF:	**7.2**	
High Temperature COP2:	**3.80**	
Low Temperature COP2:	**2.50**	
HSPF2:	**7.2**	

Supply Fan

External Static Pressure:	**1.00**	in wg
Fan RPM:	**2036**	
Fan Power:	**0.90**	BHP

Performance Summary For ID 2

Project: Climatec - City of Esc - Fire Station 3 04/12/2025
Prepared By: Shawn Harlan 08:11AM

NOTE: **Selected IFM RPM Range: 1228 - 2390**

Selection includes construction throwaway filter into the base fan curve. This filter is not MERV Rated.

Electrical Data

Voltage Range:	**187 - 253**
Compressor #1 RLA:	**15.4**
Compressor #1 LRA:	**150**
Indoor Fan Motor Type:	**MED**
Indoor Fan Motor FLA (Total):	**9.2**
Power Supply MCA:	**30**
Power Supply MOCP (Fuse or HACR):	**45**
Disconnect Size FLA:	**30**
Disconnect Size LRA:	**166**
Electrical Convenience Outlet:	**None**
Outdoor Fan [Qty / FLA (ea)]:	**1 / 1.3**

Control Panel SCCR: 5kA RMS at Rated Symmetrical Voltage

Acoustics

Sound Power Levels, db re 10E-12 Watts

	Discharge	Inlet	Outdoor
63 Hz	92.3	90.8	85.6
125 Hz	83.5	79.7	84.7
250 Hz	77.6	72.4	80.5
500 Hz	73.9	66.4	76.0
1000 Hz	70.7	68.5	72.4
2000 Hz	67.7	59.3	68.0
4000 Hz	64.3	53.1	62.8
8000 Hz	60.4	46.8	59.3
A-Weighted	77.2	72.6	79.0

Advanced Acoustics

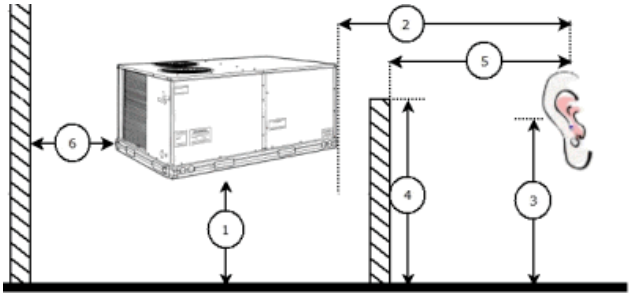

Advanced Accoustics Parameters

1. Unit height above ground: **30.0** ft
2. Horizontal distance from unit to receiver: **50.0** ft
3. Receiver height above ground: **5.7** ft
4. Height of obstruction: **0.0** ft
5. Horizontal distance from obstruction to receiver: **0.0** ft
6. Horizontal distance from unit to obstruction: **0.0** ft

Detailed Acoustics Information

Performance Summary For ID 2

Project: Climatec - City of Esc - Fire Station 3 04/12/2025
Prepared By: Shawn Harlan 08:11AM

Octave Band Center Freq. Hz	63	125	250	500	1k	2k	4k	8k	Overall
A	85.6	84.7	80.5	76.0	72.4	68.0	62.8	59.3	89.2 Lw
B	59.4	68.6	71.9	72.8	72.4	69.2	63.8	58.2	78.5 LwA
C	53.2	52.3	48.1	43.6	40.0	35.6	30.4	26.9	56.8 Lp
D	27.0	36.2	39.5	40.4	40.0	36.8	31.4	25.8	46.1 LpA

Legend
A Sound Power Levels at Unit's Acoustic Center, Lw
B A-Weighted Sound Power Levels at Unit's Acoustic Center, LwA
C Sound Pressure Levels at Specific Distance from Unit, Lp
D A-Weighted Sound Pressure Levels at Specific Distance from Unit, LpA

Calculation methods used in this program are patterned after the ASHRAE Guide; other ASHRAE Publications and the AHRI Acoustical Standards. While a very significant effort has been made to insure the technical accuracy of this program, it is assumed that the user is knowledgeable in the art of system sound estimation and is aware of the tolerances involved in real world acoustical estimation. This program makes certain assumptions as to the dominant sound sources and sound paths which may not always be appropriate to the real system being estimated. Because of this, no assurances can be offered that this software will always generate an accurate sound prediction from user supplied input data. If in doubt about the estimation of expected sound levels in a space, an Acoustical Engineer or a person with sound prediction expertise should be consulted.

Fan Curve

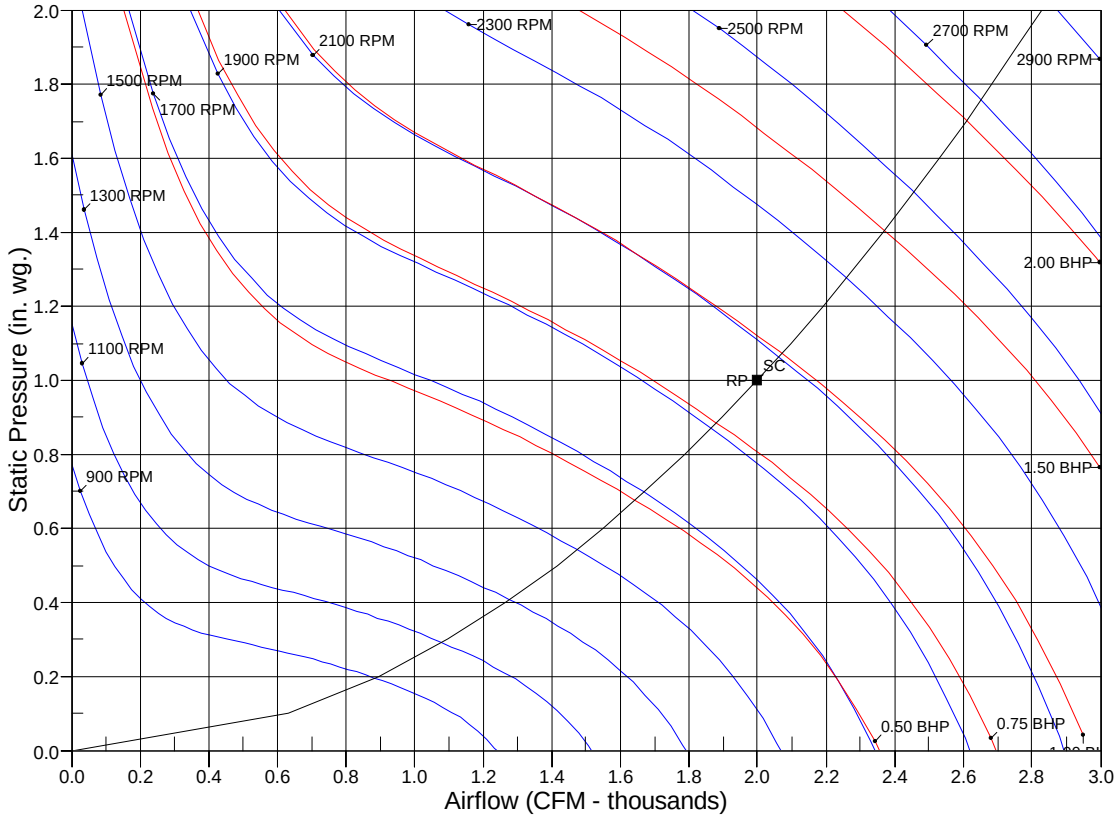

RPM = 2036 BHP = 0.90 Maximum RPM = 2836 Maximum BHP = 3.00
SC - System Curve RP - Rated Point

ID 3,4,7

Tag Cover Sheet
Unit Report
Certified Drawing
Performance Report

Unit Report For ID 3,4,7

Project: Climatec - City of Esc - Fire Station 3 04/12/2025
Prepared By: Shawn Harlan 08:11AM

Unit Parameters

Unit Model: **50GEQM05A2M5-0A0A0**
Unit Size: **05 (4 Tons)**
Volts-Phase-Hertz: **208-3-60**
Heating Type: **Heat Pump**
Refrigerant: **R-454B**
Heat Control: **Two Stage Cooling, Single Circuit**
Duct Cfg: **Vertical Supply / Vertical Return**

Dimensions (ft. in.) & Weight (lb.) ***

Unit Length: **6' 2.375"**
Unit Width: **3' 10.625"**
Unit Height: **3' 5.375"**
Total Operating Weight: **607** lb

*** Weights and Dimensions are approximate. Weight does not include unit packaging. Approximate dimensions are provided primarily for shipping purposes. For exact dimensions and weights, refer to appropriate product data catalog.

Lines and Filters

Return Air Filter Type: **Throwaway**
Return Air Filter Quantity: **4**
Return Air Filter Size: **16 x 16 x 2**

Selection includes construction throwaway filter into the base fan curve.

Unit Configuration

Standard/Medium Static - EcoBlue Vane Axial Fan
Al/Cu - Al/Cu - Louvered Hail Guards
Standard Electromechanical Controls (can be used with field installed economizers and dampers)
Standard

Warranty Information

5-Year compressor parts (STD.)
1-Year parts (STD.)

No optional warranties were selected.

NOTE: Please see Warranty Catalog 500-089 for explanation of policies and ordering methods.

Ordering Information

Part Number	Description	Quantity
50GEQM05A2M5-0A0A0	Rooftop Unit	1

Certified Drawing for ID 3,4,7

Project: Climatec - City of Esc - Fire Station 3
Prepared By: Shawn Harlan

04/12/2025
08:11AM

NOTES:

1. DIMENSIONS ARE IN INCHES, DIMENSIONS IN [ ] ARE IN MILLIMETERS.
2. CENTER OF GRAVITY
3. DIRECTION OF AIR FLOW
4. ALL VIEW DRAWN USING 3RD ANGLE

UNIT	J	K
50GEQ*04	33 3/8 [847]	18 5/8 [472]
50GEQ*05	41 3/8 [1051]	14 7/8 [378]
50GEQ*06	41 3/8 [1051]	14 7/8 [378]

Carrier
THIS DOCUMENT IS THE PROPERTY OF CARRIER CORPORATION AND IS DELIVERED UPON THE EXPRESS CONDITION THAT THE CONTENTS WILL NOT BE DISCLOSED OR USED WITHOUT CARRIER CORPORATION'S WRITTEN CONSENT.
SUBMISSION OF THESE DRAWINGS OR DOCUMENTS DOES NOT CONSTITUTE PART PERFORMANCE OR ACCEPTANCE OF CONTRACT.

	CONNECTION SIZES
A	1 3/8" [35] DIA FIELD POWER SUPPLY HOLE
B	2" [51] DIA POWER SUPPLY KNOCKOUT
C	1 3/4" [44] DIA GAUGE ACCESS PLUG
D	7/8" [22] DIA FIELD CONTROL WIRING HOLE
E	3/4"-14 NPT CONDENSATE DRAIN
G	2 1/2 " [64] DIA POWER SUPPLY KNOCK-OUT

THRU-THE-BASE CHART
THESE HOLES REQUIRED FOR USE CRBTMPWR008A00, 009A00

	THREADED CONDUIT SIZE	WIRE USE	REQ'D HOLE SIZES (MAX.)
W	1/2"	115V	7/8" [22.2]
X	1/2"	24V	7/8" [22.2]
Y *	3/4"	POWER	1 1/8" [28.6]
Z**	(009A00) 1/2" FPT	GAS	1 1/8" [28.6]
	FOR "THRU-THE-BASEPAN" FACTORY OPTION, FITTINGS FOR ONLY X,Y, & Z ARE PROVIDED		
*	SELECT EITHER 3/4" OR 1/2" FOR POWER, DEPENDING ON WIRE SIZE		
**	(008A00) PROVIDES 3/4" FPT THRU CURB FLANGE & FITTING.		

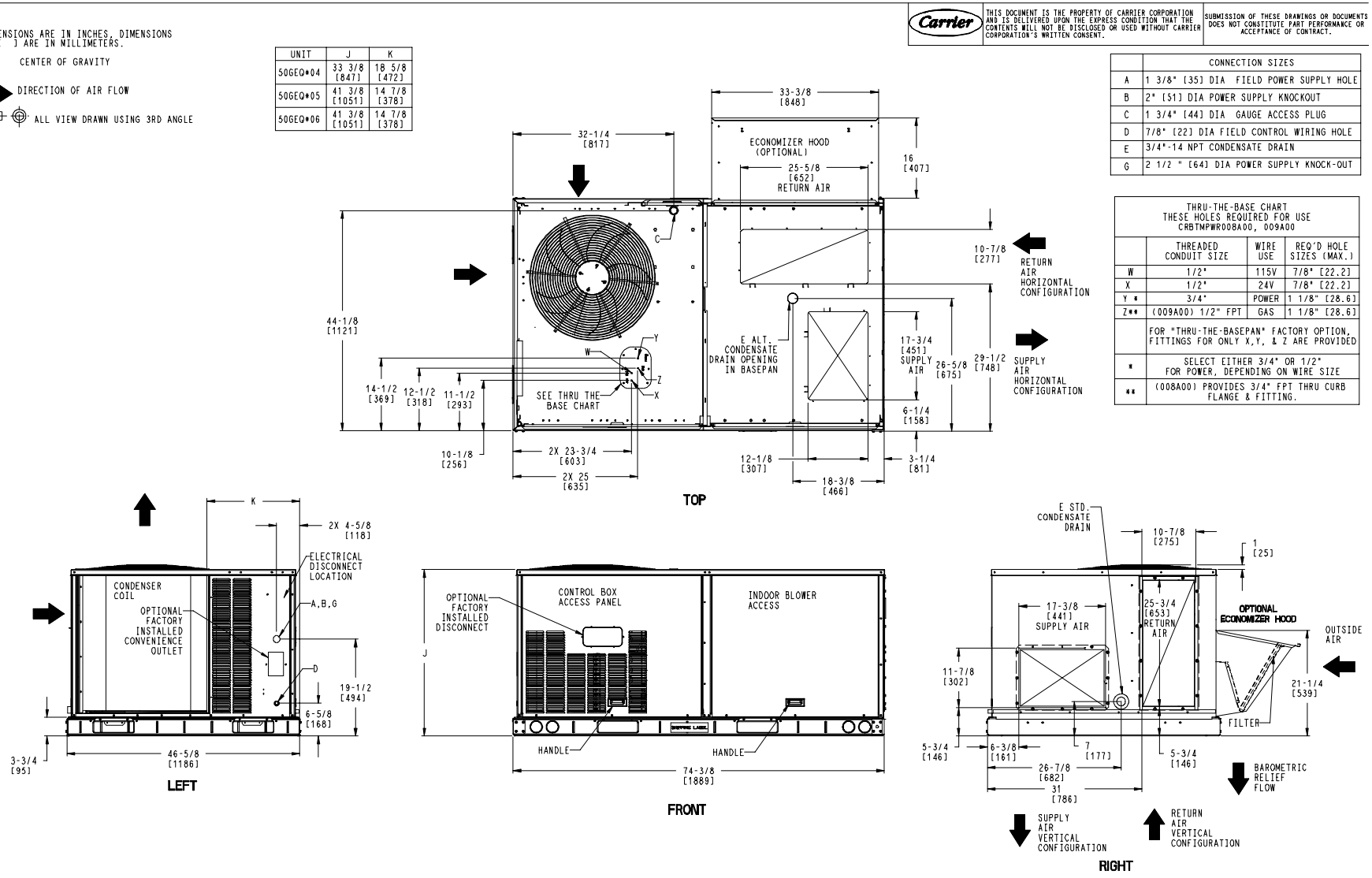

ITC CLASSIFICATION	SHEET	DATE	SUPERCEDES			REV
U.S. ECCN:NSR	1 OF 3	9/9/24	9/15/23	50GEQ 04-06 SINGLE PACKAGE HEAT PUMP	48TC006647	A

Certified Drawing for ID 3,4,7

Project: Climatec - City of Esc - Fire Station 3
Prepared By: Shawn Harlan

04/12/2025
08:11AM

UNIT	STD. UNIT WEIGHT *		CORNER WEIGHT (A)		CORNER WEIGHT (B)		CORNER WEIGHT (C)		CORNER WEIGHT (D)		C.G.		HEIGHT
	LBS.	KG.	LBS.	KG.	LBS.	KG.	LBS.	KG.	LBS.	KG.	X	Y	Z
50GEQ*04	475	215	128	58	120	54	110	50	117	53	36 [914]	22 3/8 [568]	16 1/8 [410]
50GEQ*05	594	269	163	74	148	67	135	61	149	68	35 3/8 [898]	22 5/16 [557]	16 1/2 [419]
50GEQ*06	596	270	163	74	148	67	135	61	149	68	35 3/8 [898]	22 5/16 [557]	16 1/2 [419]

*- STANDARD UNIT WEIGHT IS WITHOUT ELECTRIC HEAT AND WITHOUT PACKAGING.
FOR OTHER OPTIONS AND ACCESSORIES REFER TO THE PRODUCT DATA CATALOG.

Carrier
THIS DOCUMENT IS THE PROPERTY OF CARRIER CORPORATION AND IS DELIVERED UPON THE EXPRESS CONDITION THAT THE CONTENTS WILL NOT BE DISCLOSED OR USED WITHOUT CARRIER CORPORATION'S WRITTEN CONSENT.
SUBMISSION OF THESE DRAWINGS OR DOCUMENTS DOES NOT CONSTITUTE PART PERFORMANCE OR ACCEPTANCE OF CONTRACT.

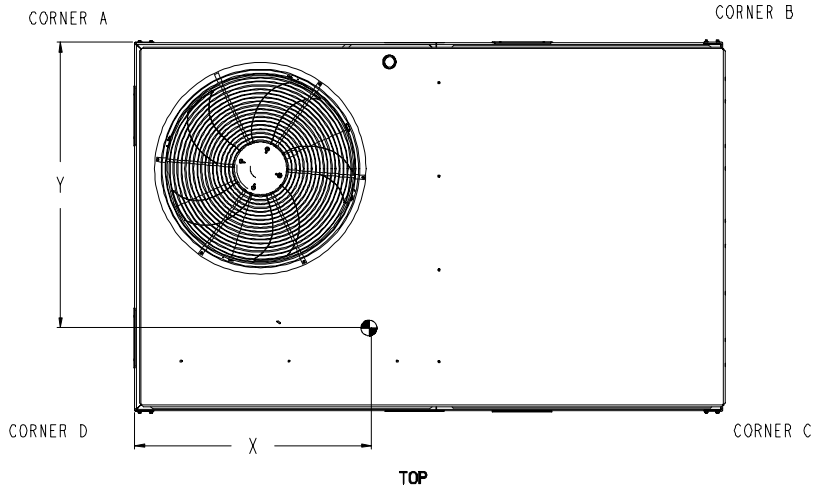

TOP

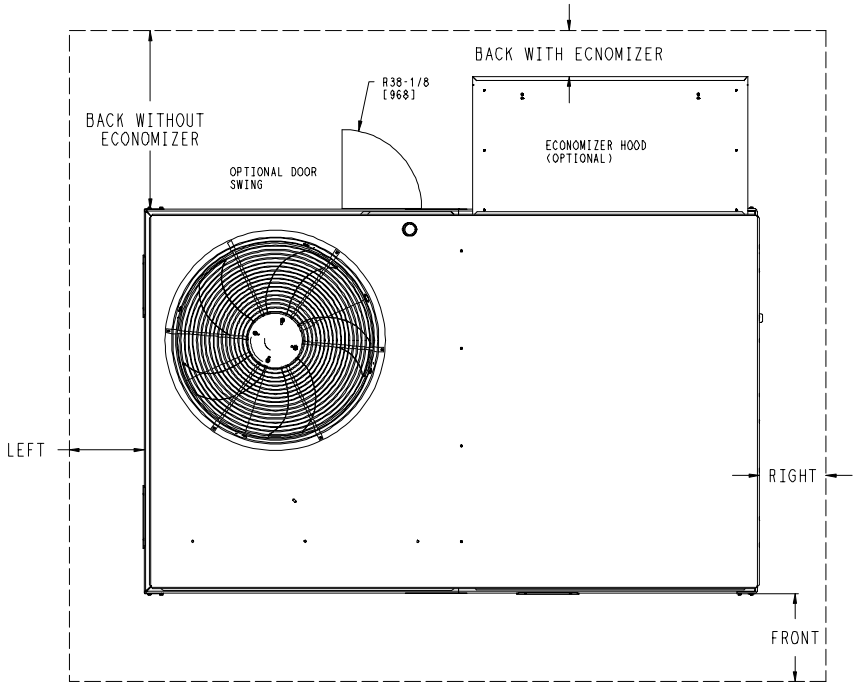

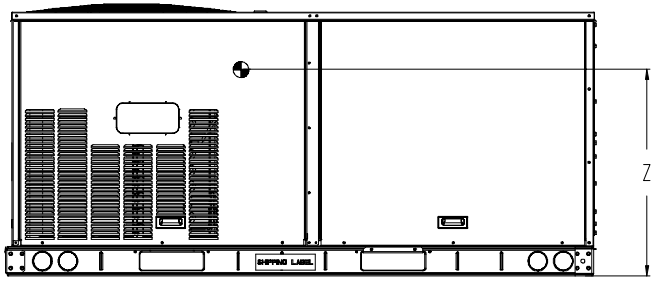

FRONT

NOTE:

1. FOR ALL MINIMUM CLEARANCES LOCAL CODES OR JURISDICTIONS MAY PREVAIL.

	CLEARANCE		
	SERVICE WITH:	SERVICE WITH:	OPERATING
SURFACE	CONDUCTIVE BARRIER	NONCONDUCTIVE BARRIER	CLEARANCE
FRONT	48 [1219mm]	36 [914mm]	18 [457mm]
LEFT	48 [1219mm]	42 [1067mm]	18 [457mm]
BACK W/O ECON	48 [1219mm]	42 [1067mm]	18 [457mm]
BACK W/ECON	36 [914mm]	36 [914mm]	18 [457mm]
RIGHT	36 [914mm]	36 [914mm]	18 [457mm]
TOP	72 [1829mm]	72 [1829mm]	72 [1829mm]

ITC CLASSIFICATION	SHEET	DATE	SUPERCEDES			REV
U.S. ECCN:NSR	2 OF 3	9/9/24	9/15/23	50GEQ 04-06 SINGLE PACKAGE HEAT PUMP	48TC006647	A

Carrier | THIS DOCUMENT IS THE PROPERTY OF CARRIER CORPORATION AND IS DELIVERED UPON THE EXPRESS CONDITION THAT THE CONTENTS WILL NOT BE DISCLOSED OR USED WITHOUT CARRIER CORPORATION'S WRITTEN CONSENT. | SUBMISSION OF THESE DRAWINGS OR DOCUMENTS DOES NOT CONSTITUTE PART PERFORMANCE OR ACCEPTANCE OF CONTRACT.

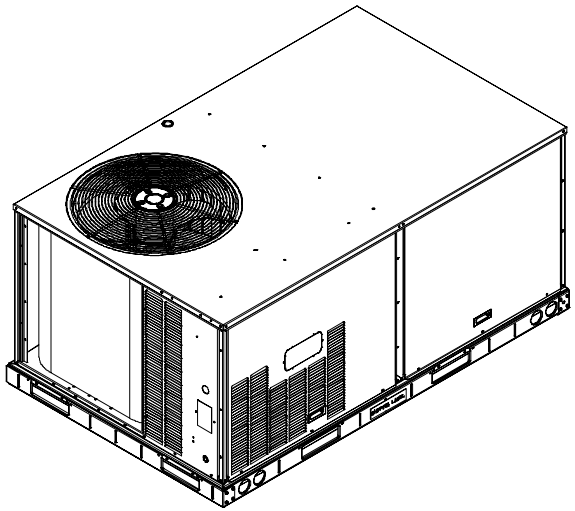

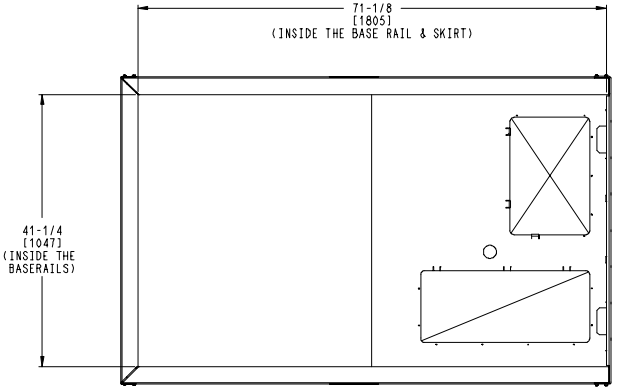

INSIDE BASERAIL DIMENSIONS
BOTTOM

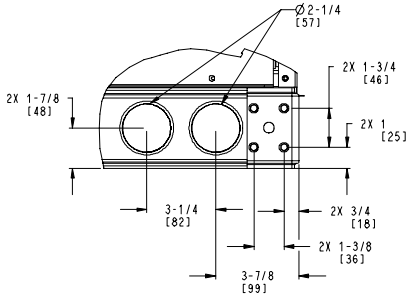

DETAIL **C**
TYP 4 PLCS

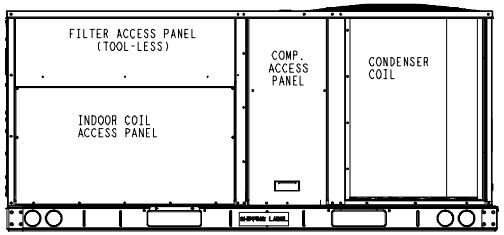

BACK

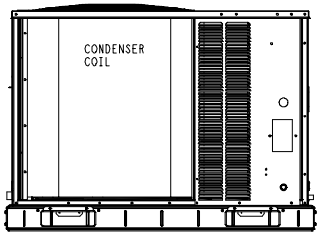

LEFT

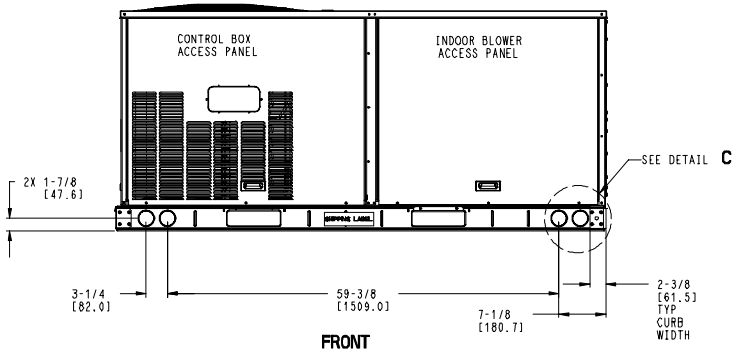

FRONT

ITC CLASSIFICATION	SHEET	DATE	SUPERCEDES			REV
U.S. ECCN:NSR	3 OF 3	9/9/24	9/15/23	50GEQ 04-06 SINGLE PACKAGE HEAT PUMP	48TC006647	A

Performance Summary For ID 3,4,7

Project: Climatec - City of Esc - Fire Station 3 04/12/2025
Prepared By: Shawn Harlan 08:11AM

Part Number:50GEQM05A2M5-0A0A0

Refrigerant:	**R-454B**	
ARI SEER:	**17.00**	
ARI SEER2:	**16.00**	
Application EER (Rooftop Unit only):	**12.12**	

Base Unit Dimensions

Unit Length:	**74.4**	in
Unit Width:	**46.6**	in
Unit Height:	**41.4**	in

Operating Weight

Base Unit Weight:	**594**	lb
Al/Cu - Al/Cu - Louvered Hail Guards:	**13**	lb
Total Operating Weight:	**607**	lb

Unit

Unit Voltage-Phase-Hertz:	**208-3-60**	
Air Discharge:	**Vertical**	
Fan Drive Type:	**Direct Drive**	
Actual Airflow:	**1600**	CFM
Site Altitude:	**0**	ft

Cooling Performance

Condenser Entering Air DB:	**95.0**	F
Evaporator Entering Air DB:	**80.0**	F
Evaporator Entering Air WB:	**67.0**	F
Entering Air Enthalpy:	**31.44**	BTU/lb
Evaporator Leaving Air DB:	**58.4**	F
Evaporator Leaving Air WB:	**57.1**	F
Evaporator Leaving Air Enthalpy:	**24.48**	BTU/lb
Unit Discharge Air DB:	**59.6**	F
Unit Discharge Air WB:	**57.6**	F
Unit Discharge Air Enthalpy:	**24.76**	BTU/lb
Gross Cooling Capacity:	**50.11**	MBH
Net Cooling Capacity:	**48.05**	MBH
Gross Sensible Capacity:	**37.34**	MBH
Net Sensible Capacity:	**35.28**	MBH
Compressor Power Input:	**3.18**	kW
Coil Bypass Factor:	**0.000**	

Heating Performance

Outdoor Ambient Temperature:	**47.0**	F
Entering Air Indoor Coil DB:	**70.0**	F
Leaving Air Indoor Coil DB:	**95.9**	F
Total Heating Capacity:	**44.80**	MBH
Integrated Heating Capacity:	**44.80**	MBH
Heating Power Input:	**3.60**	kW
High Temperature COP:	**3.80**	
Low Temperature COP:	**2.50**	
HSPF:	**7.2**	
High Temperature COP2:	**3.80**	
Low Temperature COP2:	**2.50**	
HSPF2:	**7.2**	

Supply Fan

External Static Pressure:	**1.00**	in wg
Fan RPM:	**1875**	
Fan Power:	**0.71**	BHP

Performance Summary For ID 3,4,7

Project: Climatec - City of Esc - Fire Station 3 04/12/2025
Prepared By: Shawn Harlan 08:11AM

NOTE: **Selected IFM RPM Range: 1047 - 2170**

Selection includes construction throwaway filter into the base fan curve. This filter is not MERV Rated.

Electrical Data

Voltage Range:	**187 - 253**
Compressor #1 RLA:	**15.6**
Compressor #1 LRA:	**112**
Indoor Fan Motor Type:	**MED**
Indoor Fan Motor FLA (Total):	**7.1**
Power Supply MCA:	**28**
Power Supply MOCP (Fuse or HACR):	**40**
Disconnect Size FLA:	**28**
Disconnect Size LRA:	**125**
Electrical Convenience Outlet:	**None**
Outdoor Fan [Qty / FLA (ea)]:	**1 / 1.3**

Control Panel SCCR: 5kA RMS at Rated Symmetrical Voltage

Acoustics

Sound Power Levels, db re 10E-12 Watts

	Discharge	Inlet	Outdoor
63 Hz	92.4	90.1	85.6
125 Hz	83.3	78.3	84.7
250 Hz	77.0	72.0	80.5
500 Hz	71.9	64.5	76.0
1000 Hz	68.4	66.6	72.4
2000 Hz	65.2	57.5	68.0
4000 Hz	62.5	51.6	62.8
8000 Hz	59.4	45.1	59.3
A-Weighted	75.8	71.2	79.0

Advanced Acoustics

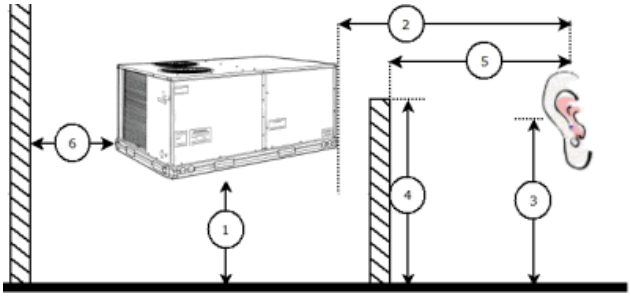

Advanced Accoustics Parameters

1. Unit height above ground:	**30.0**	ft
2. Horizontal distance from unit to receiver:	**50.0**	ft
3. Receiver height above ground:	**5.7**	ft
4. Height of obstruction:	**0.0**	ft
5. Horizontal distance from obstruction to receiver:	**0.0**	ft
6. Horizontal distance from unit to obstruction:	**0.0**	ft

Detailed Acoustics Information

Performance Summary For ID 3,4,7

Project: Climatec - City of Esc - Fire Station 3 04/12/2025
Prepared By: Shawn Harlan 08:11AM

Octave Band Center Freq. Hz	63	125	250	500	1k	2k	4k	8k	Overall
A	85.6	84.7	80.5	76.0	72.4	68.0	62.8	59.3	89.2 Lw
B	59.4	68.6	71.9	72.8	72.4	69.2	63.8	58.2	78.5 LwA
C	53.2	52.3	48.1	43.6	40.0	35.6	30.4	26.9	56.8 Lp
D	27.0	36.2	39.5	40.4	40.0	36.8	31.4	25.8	46.1 LpA

Legend
A Sound Power Levels at Unit's Acoustic Center, Lw
B A-Weighted Sound Power Levels at Unit's Acoustic Center, LwA
C Sound Pressure Levels at Specific Distance from Unit, Lp
D A-Weighted Sound Pressure Levels at Specific Distance from Unit, LpA

Calculation methods used in this program are patterned after the ASHRAE Guide; other ASHRAE Publications and the AHRI Acoustical Standards. While a very significant effort has been made to insure the technical accuracy of this program, it is assumed that the user is knowledgeable in the art of system sound estimation and is aware of the tolerances involved in real world acoustical estimation. This program makes certain assumptions as to the dominant sound sources and sound paths which may not always be appropriate to the real system being estimated. Because of this, no assurances can be offered that this software will always generate an accurate sound prediction from user supplied input data. If in doubt about the estimation of expected sound levels in a space, an Acoustical Engineer or a person with sound prediction expertise should be consulted.

Fan Curve

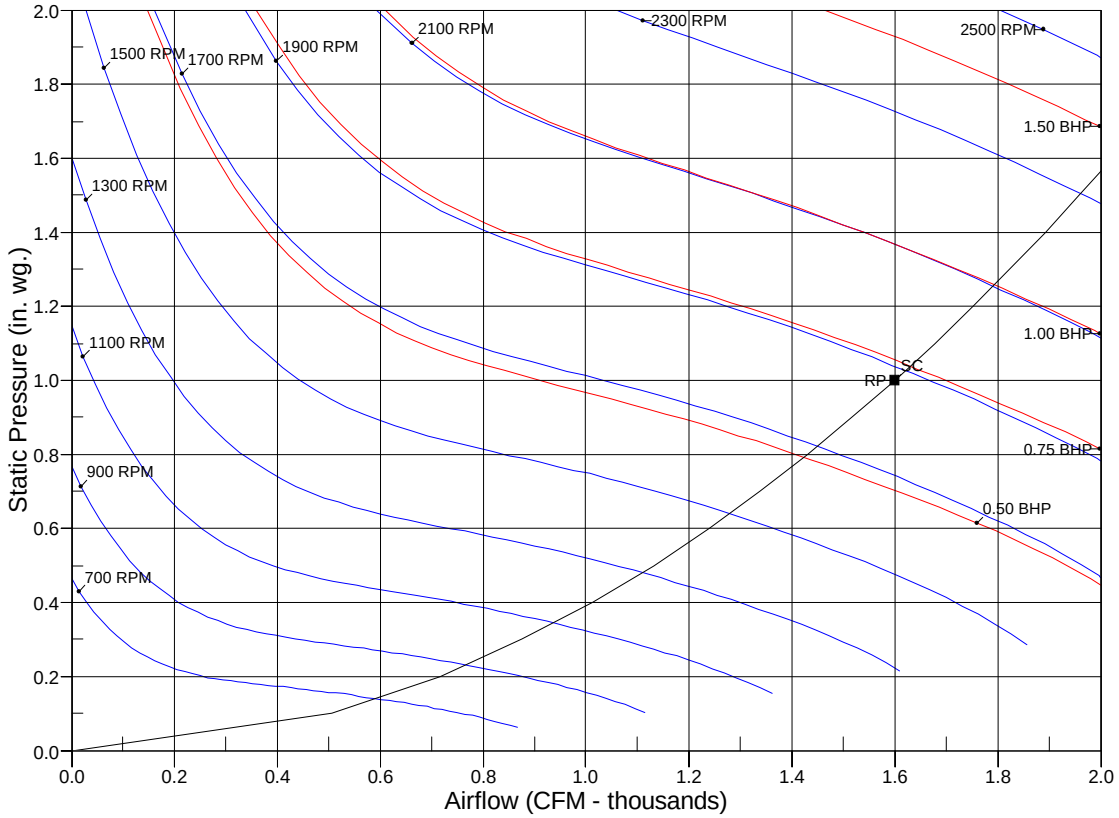

RPM = 1875 BHP = 0.71 Maximum RPM = 2660 Maximum BHP = 3.00
SC - System Curve RP - Rated Point

ID 6

Tag Cover Sheet
Unit Report
Certified Drawing
Performance Report

Unit Report For ID 6

Project: Climatec - City of Esc - Fire Station 3 04/12/2025
Prepared By: Shawn Harlan 08:11AM

Unit Parameters

Unit Model: **50GEQM04A2M5-0A0A0**
Unit Size: **04 (3 Tons)**
Volts-Phase-Hertz: **208-3-60**
Heating Type: **Heat Pump**
Refrigerant: **R-454B**
Heat Control: **Two Stage Cooling, Single Circuit**
Duct Cfg: **Vertical Supply / Vertical Return**

Dimensions (ft. in.) & Weight (lb.) ***

Unit Length: **6' 2.375"**
Unit Width: **3' 10.625"**
Unit Height: **3' 5.375"**
Total Operating Weight: **580** lb

*** Weights and Dimensions are approximate. Weight does not include unit packaging. Approximate dimensions are provided primarily for shipping purposes. For exact dimensions and weights, refer to appropriate product data catalog.

Lines and Filters

Return Air Filter Type: **Throwaway**
Return Air Filter Quantity: **2**
Return Air Filter Size: **16 x 25 x 2**

Selection includes construction throwaway filter into the base fan curve.

Unit Configuration

Standard/Medium Static - EcoBlue Vane Axial Fan
Al/Cu - Al/Cu - Louvered Hail Guards
Standard Electromechanical Controls (can be used with field installed economizers and dampers)
Standard

Warranty Information

5-Year compressor parts (STD.)
1-Year parts (STD.)

No optional warranties were selected.

NOTE: Please see Warranty Catalog 500-089 for explanation of policies and ordering methods.

Ordering Information

Part Number	Description	Quantity
50GEQM04A2M5-0A0A0	Rooftop Unit	1

Certified Drawing for ID 6

Project: Climatec - City of Esc - Fire Station 3
Prepared By: Shawn Harlan

04/12/2025
08:11AM

NOTES:

1. DIMENSIONS ARE IN INCHES, DIMENSIONS IN [ ] ARE IN MILLIMETERS.
2. CENTER OF GRAVITY
3. DIRECTION OF AIR FLOW
4. ALL VIEW DRAWN USING 3RD ANGLE

UNIT	J	K
50GEQ*04	33 3/8 [847]	18 5/8 [472]
50GEQ*05	41 3/8 [1051]	14 7/8 [378]
50GEQ*06	41 3/8 [1051]	14 7/8 [378]

Carrier
THIS DOCUMENT IS THE PROPERTY OF CARRIER CORPORATION AND IS DELIVERED UPON THE EXPRESS CONDITION THAT THE CONTENTS WILL NOT BE DISCLOSED OR USED WITHOUT CARRIER CORPORATION'S WRITTEN CONSENT.
SUBMISSION OF THESE DRAWINGS OR DOCUMENTS DOES NOT CONSTITUTE PART PERFORMANCE OR ACCEPTANCE OF CONTRACT.

	CONNECTION SIZES
A	1 3/8" [35] DIA FIELD POWER SUPPLY HOLE
B	2" [51] DIA POWER SUPPLY KNOCKOUT
C	1 3/4" [44] DIA GAUGE ACCESS PLUG
D	7/8" [22] DIA FIELD CONTROL WIRING HOLE
E	3/4"-14 NPT CONDENSATE DRAIN
G	2 1/2 " [64] DIA POWER SUPPLY KNOCK-OUT

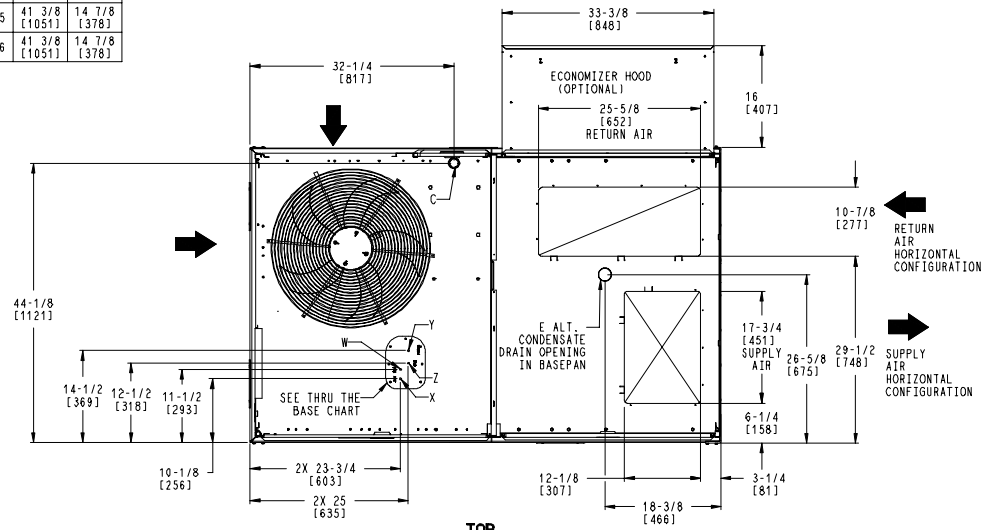

THRU-THE-BASE CHART THESE HOLES REQUIRED FOR USE CRBTMPWR008A00, 009A00			
	THREADED CONDUIT SIZE	WIRE USE	REQ'D HOLE SIZES (MAX.)
W	1/2"	115V	7/8" [22.2]
X	1/2"	24V	7/8" [22.2]
Y *	3/4"	POWER	1 1/8" [28.6]
Z**	(009A00) 1/2" FPT	GAS	1 1/8" [28.6]
	FOR "THRU-THE-BASEPAN" FACTORY OPTION, FITTINGS FOR ONLY X,Y, & Z ARE PROVIDED		
*	SELECT EITHER 3/4" OR 1/2" FOR POWER, DEPENDING ON WIRE SIZE		
**	(008A00) PROVIDES 3/4" FPT THRU CURB FLANGE & FITTING.		

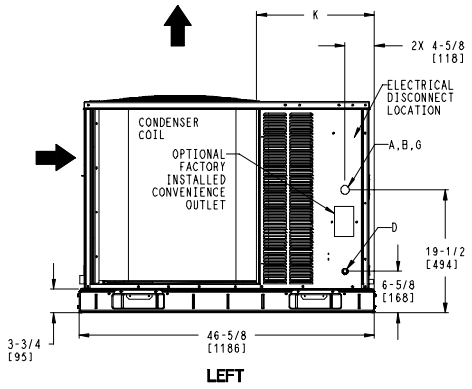

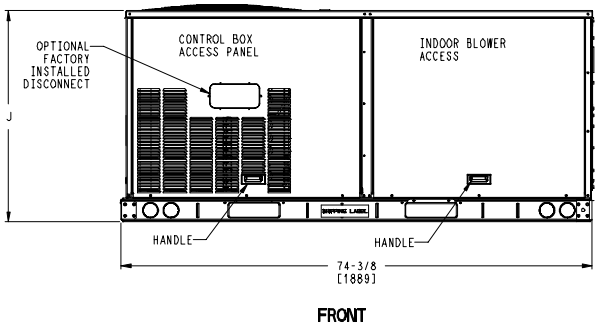

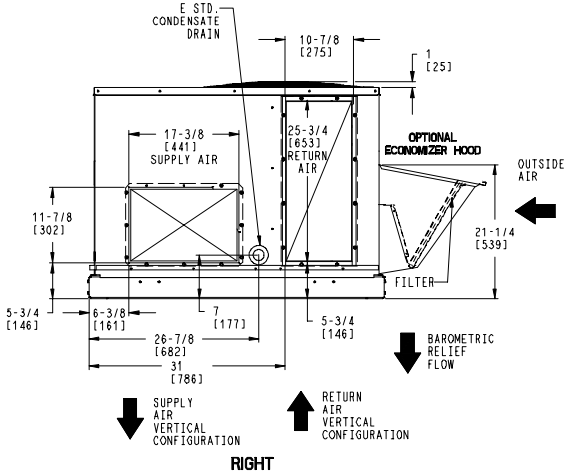

ITC CLASSIFICATION	SHEET	DATE	SUPERCEDES			REV
U.S. ECCN:NSR	1 OF 3	9/9/24	9/15/23	50GEQ 04-06 SINGLE PACKAGE HEAT PUMP	48TC006647	A

Certified Drawing for ID 6

Project: Climatec - City of Esc - Fire Station 3
Prepared By: Shawn Harlan

04/12/2025
08:11AM

UNIT	STD. UNIT WEIGHT *		CORNER WEIGHT (A)		CORNER WEIGHT (B)		CORNER WEIGHT (C)		CORNER WEIGHT (D)		C.G.		HEIGHT
	LBS.	KG.	LBS.	KG.	LBS.	KG.	LBS.	KG.	LBS.	KG.	X	Y	Z
50GEQ*04	475	215	128	58	120	54	110	50	117	53	36 [914]	22 3/8 [568]	16 1/8 [410]
50GEQ*05	594	269	163	74	148	67	135	61	149	68	35 3/8 [898]	22 5/16 [557]	16 1/2 [419]
50GEQ*06	596	270	163	74	148	67	135	61	149	68	35 3/8 [898]	22 5/16 [557]	16 1/2 [419]

*- STANDARD UNIT WEIGHT IS WITHOUT ELECTRIC HEAT AND WITHOUT PACKAGING.
FOR OTHER OPTIONS AND ACCESSORIES REFER TO THE PRODUCT DATA CATALOG.

Carrier
THIS DOCUMENT IS THE PROPERTY OF CARRIER CORPORATION AND IS DELIVERED UPON THE EXPRESS CONDITION THAT THE CONTENTS WILL NOT BE DISCLOSED OR USED WITHOUT CARRIER CORPORATION'S WRITTEN CONSENT.
SUBMISSION OF THESE DRAWINGS OR DOCUMENTS DOES NOT CONSTITUTE PART PERFORMANCE OR ACCEPTANCE OF CONTRACT.

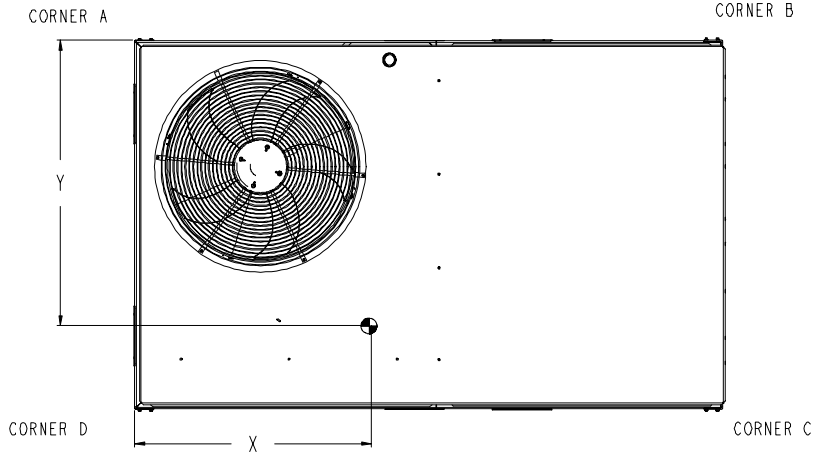

TOP

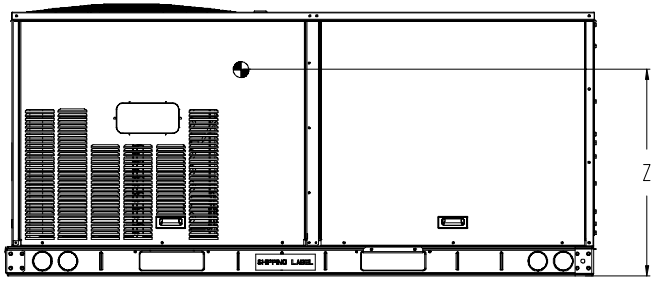

FRONT

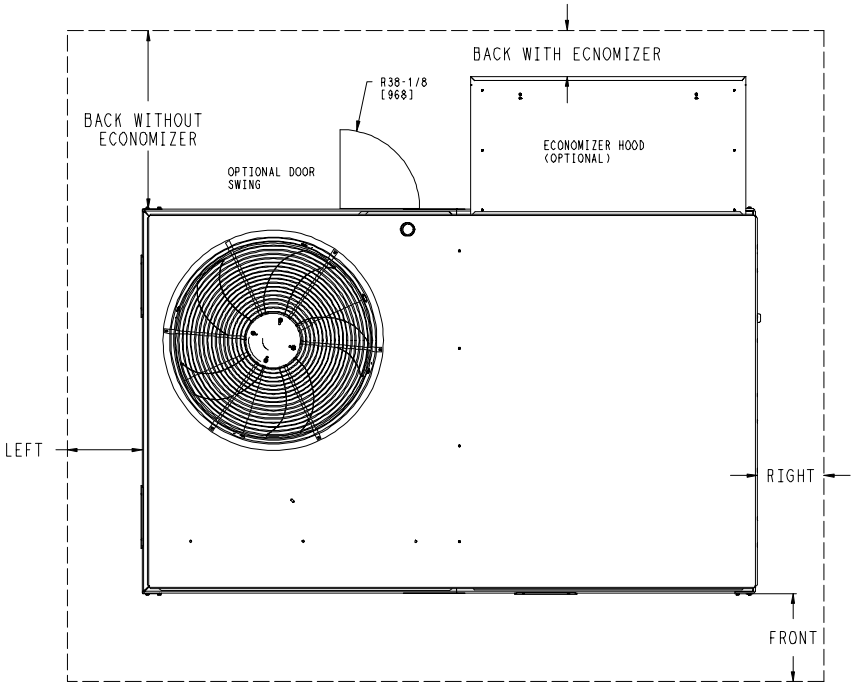

NOTE:

1. FOR ALL MINIMUM CLEARANCES LOCAL CODES OR JURISDICTIONS MAY PREVAIL.

	CLEARANCE		
	SERVICE WITH:	SERVICE WITH:	OPERATING
SURFACE	CONDUCTIVE BARRIER	NONCONDUCTIVE BARRIER	CLEARANCE
FRONT	48 [1219mm]	36 [914mm]	18 [457mm]
LEFT	48 [1219mm]	42 [1067mm]	18 [457mm]
BACK W/O ECON	48 [1219mm]	42 [1067mm]	18 [457mm]
BACK W/ECON	36 [914mm]	36 [914mm]	18 [457mm]
RIGHT	36 [914mm]	36 [914mm]	18 [457mm]
TOP	72 [1829mm]	72 [1829mm]	72 [1829mm]

ITC CLASSIFICATION	SHEET	DATE	SUPERCEDES			REV
U.S. ECCN:NSR	2 OF 3	9/9/24	9/15/23	50GEQ 04-06 SINGLE PACKAGE HEAT PUMP	48TC006647	A

Carrier | THIS DOCUMENT IS THE PROPERTY OF CARRIER CORPORATION AND IS DELIVERED UPON THE EXPRESS CONDITION THAT THE CONTENTS WILL NOT BE DISCLOSED OR USED WITHOUT CARRIER CORPORATION'S WRITTEN CONSENT. | SUBMISSION OF THESE DRAWINGS OR DOCUMENTS DOES NOT CONSTITUTE PART PERFORMANCE OR ACCEPTANCE OF CONTRACT.

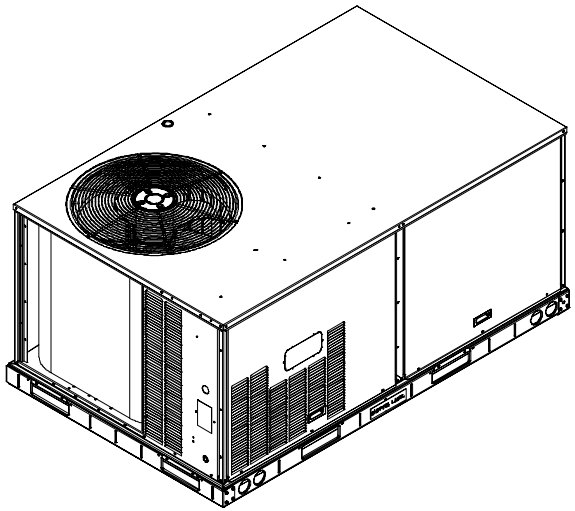

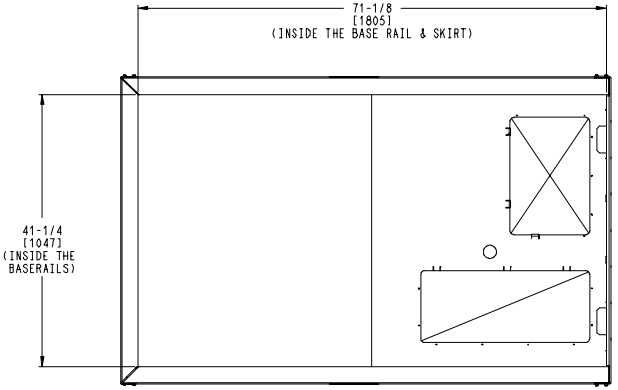

INSIDE BASERAIL DIMENSIONS
BOTTOM

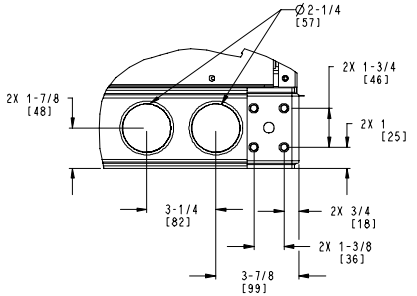

DETAIL **C**
TYP 4 PLCS

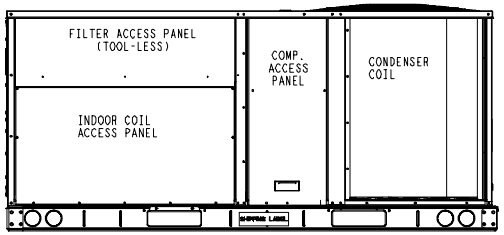

BACK

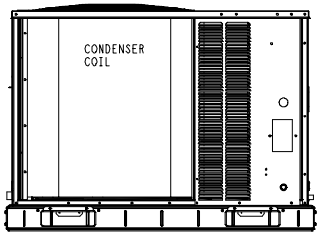

LEFT

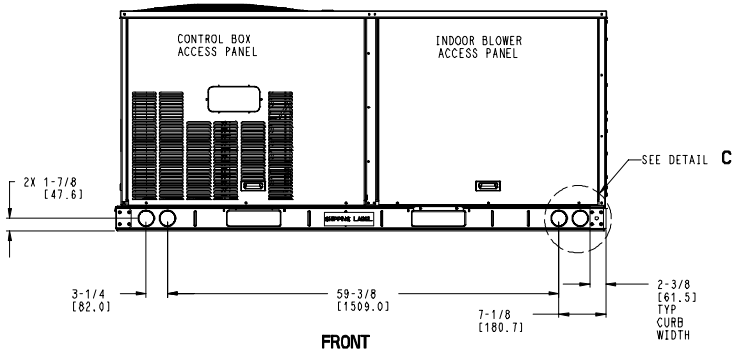

FRONT

ITC CLASSIFICATION	SHEET	DATE	SUPERCEDES			REV
U.S. ECCN:NSR	3 OF 3	9/9/24	9/15/23	50GEQ 04-06 SINGLE PACKAGE HEAT PUMP	48TC006647	A

Performance Summary For ID 6

Project: Climatec - City of Esc - Fire Station 3 04/12/2025
Prepared By: Shawn Harlan 08:11AM

Part Number:50GEQM04A2M5-0A0A0

Refrigerant:	**R-454B**	
ARI SEER:	**17.00**	
ARI SEER2:	**16.00**	
Application EER (Rooftop Unit only):	**11.89**	

Base Unit Dimensions

Unit Length:	**74.4**	in
Unit Width:	**46.6**	in
Unit Height:	**41.4**	in

Operating Weight

Base Unit Weight:	**567**	lb
Al/Cu - Al/Cu - Louvered Hail Guards:	**13**	lb
Total Operating Weight:	**580**	lb

Unit

Unit Voltage-Phase-Hertz:	**208-3-60**	
Air Discharge:	**Vertical**	
Fan Drive Type:	**Direct Drive**	
Actual Airflow:	**1200**	CFM
Site Altitude:	**0**	ft

Cooling Performance

Condenser Entering Air DB:	**95.0**	F
Evaporator Entering Air DB:	**80.0**	F
Evaporator Entering Air WB:	**67.0**	F
Entering Air Enthalpy:	**31.44**	BTU/lb
Evaporator Leaving Air DB:	**58.5**	F
Evaporator Leaving Air WB:	**57.2**	F
Evaporator Leaving Air Enthalpy:	**24.52**	BTU/lb
Unit Discharge Air DB:	**59.7**	F
Unit Discharge Air WB:	**57.7**	F
Unit Discharge Air Enthalpy:	**24.81**	BTU/lb
Gross Cooling Capacity:	**37.36**	MBH
Net Cooling Capacity:	**35.79**	MBH
Gross Sensible Capacity:	**27.90**	MBH
Net Sensible Capacity:	**26.33**	MBH
Compressor Power Input:	**2.37**	kW
Coil Bypass Factor:	**0.027**	

Heating Performance

Outdoor Ambient Temperature:	**47.0**	F
Entering Air Indoor Coil DB:	**70.0**	F
Leaving Air Indoor Coil DB:	**96.1**	F
Total Heating Capacity:	**33.80**	MBH
Integrated Heating Capacity:	**33.80**	MBH
Heating Power Input:	**2.60**	kW
High Temperature COP:	**3.90**	
Low Temperature COP:	**2.40**	
HSPF:	**8.0**	
High Temperature COP2:	**3.90**	
Low Temperature COP2:	**2.40**	
HSPF2:	**6.7**	

Supply Fan

External Static Pressure:	**1.00**	in wg
Fan RPM:	**1946**	
Fan Power:	**0.54**	BHP

Performance Summary For ID 6

Project: Climatec - City of Esc - Fire Station 3 04/12/2025
Prepared By: Shawn Harlan 08:11AM

NOTE: **Selected IFM RPM Range: 1058 - 2190**

Selection includes construction throwaway filter into the base fan curve. This filter is not MERV Rated.

Electrical Data

Voltage Range:	**187 - 253**
Compressor #1 RLA:	**11.2**
Compressor #1 LRA:	**82**
Indoor Fan Motor Type:	**MED**
Indoor Fan Motor FLA (Total):	**5.1**
Power Supply MCA:	**22**
Power Supply MOCP (Fuse or HACR):	**30**
Disconnect Size FLA:	**22**
Disconnect Size LRA:	**93**
Electrical Convenience Outlet:	**None**
Outdoor Fan [Qty / FLA (ea)]:	**1 / 2.6**

Control Panel SCCR: 5kA RMS at Rated Symmetrical Voltage

Acoustics

Sound Power Levels, db re 10E-12 Watts

	Discharge	Inlet	Outdoor
63 Hz	92.4	86.1	85.6
125 Hz	83.6	79.2	84.7
250 Hz	76.5	70.0	80.5
500 Hz	69.1	62.8	76.0
1000 Hz	66.5	64.1	72.4
2000 Hz	63.5	55.8	68.0
4000 Hz	59.4	50.0	62.8
8000 Hz	57.1	43.3	59.3
A-Weighted	74.6	69.3	79.0

Advanced Acoustics

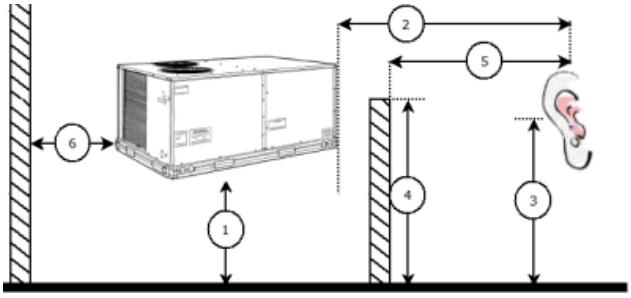

Advanced Accoustics Parameters

1. Unit height above ground:	**30.0**	ft
2. Horizontal distance from unit to receiver:	**50.0**	ft
3. Receiver height above ground:	**5.7**	ft
4. Height of obstruction:	**0.0**	ft
5. Horizontal distance from obstruction to receiver:	**0.0**	ft
6. Horizontal distance from unit to obstruction:	**0.0**	ft

Detailed Acoustics Information

Performance Summary For ID 6

Project: Climatec - City of Esc - Fire Station 3 04/12/2025
Prepared By: Shawn Harlan 08:11AM

Octave Band Center Freq. Hz	63	125	250	500	1k	2k	4k	8k	Overall
A	85.6	84.7	80.5	76.0	72.4	68.0	62.8	59.3	89.2 Lw
B	59.4	68.6	71.9	72.8	72.4	69.2	63.8	58.2	78.5 LwA
C	53.2	52.3	48.1	43.6	40.0	35.6	30.4	26.9	56.8 Lp
D	27.0	36.2	39.5	40.4	40.0	36.8	31.4	25.8	46.1 LpA

Legend
A Sound Power Levels at Unit's Acoustic Center, Lw
B A-Weighted Sound Power Levels at Unit's Acoustic Center, LwA
C Sound Pressure Levels at Specific Distance from Unit, Lp
D A-Weighted Sound Pressure Levels at Specific Distance from Unit, LpA

Calculation methods used in this program are patterned after the ASHRAE Guide; other ASHRAE Publications and the AHRI Acoustical Standards. While a very significant effort has been made to insure the technical accuracy of this program, it is assumed that the user is knowledgeable in the art of system sound estimation and is aware of the tolerances involved in real world acoustical estimation. This program makes certain assumptions as to the dominant sound sources and sound paths which may not always be appropriate to the real system being estimated. Because of this, no assurances can be offered that this software will always generate an accurate sound prediction from user supplied input data. If in doubt about the estimation of expected sound levels in a space, an Acoustical Engineer or a person with sound prediction expertise should be consulted.

Fan Curve

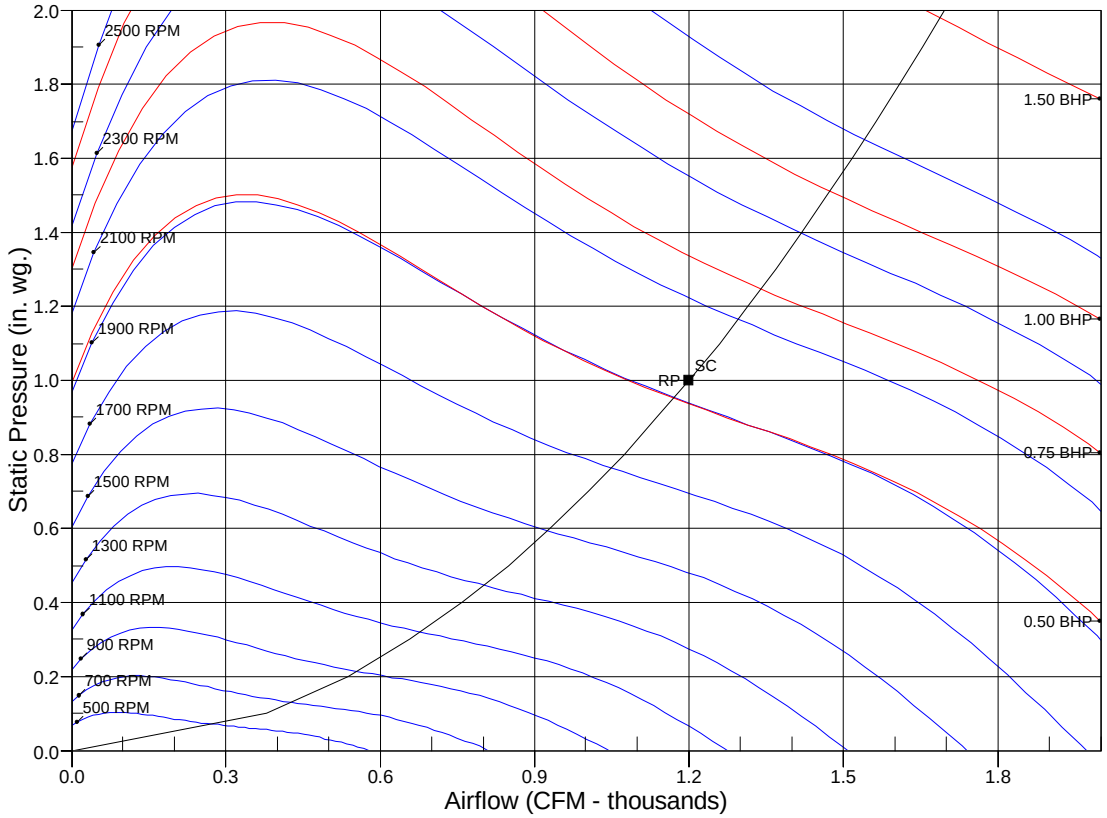

RPM = 1946 BHP = 0.54 Maximum RPM = 2490 Maximum BHP = 3.00
SC - System Curve RP - Rated Point

Outdoor Unit Heat Pump Ductless System

Outdoor Model: **37MARAQ24AA3**

Carrier

Turn to the experts

Job Data: _____ **Location:** _____

Tag #: _____ **Carrier#:** _____

Date: _____

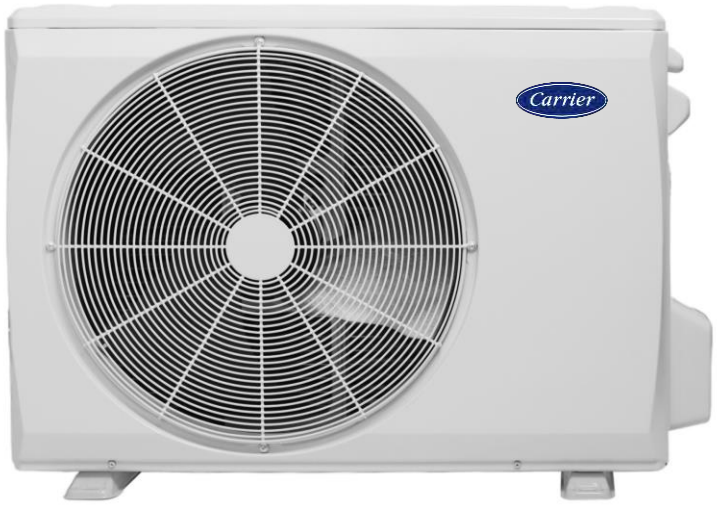

OUTDOOR STANDARD FEATURES

- Variable Speed (Inverter)
- Factory installed Base Pan Heater
- Factory installed Crankcase Heater
- Low Voltage Controls
- Auto-Restart function
- Condenser High Temp Protection
- Quiet operation
- Anti-corrosive fin coating

RESIDENTIAL APPLICATION LIMITED WARRANTY*

- Ten (10) years if properly registered within ninety (90) days after original installation, parts are warranted to the original purchaser for a period of ten (10) years. Otherwise, parts warranty is five (5) years.

NOTE: Images for illustration purposes only. Actual models may be slightly different.

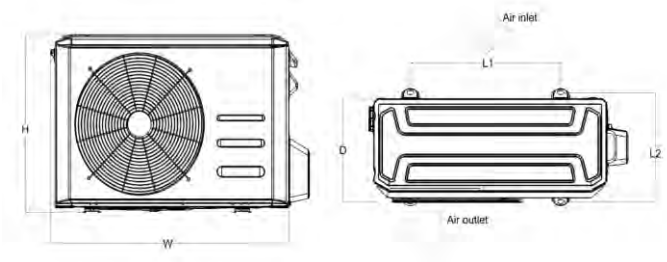

OUTDOOR UNIT DIMENSIONS						
Capacity	**Unit**	**W**	**D**	**H**	**L1**	**L2**
9K/12K	mm	765	303	555	452.4	313.82
	inch	30.12	11.93	21.85	17.81	12.36
18K	mm	890	342	673	663	379.59
	inch	35.04	13.46	26.5	26.1	14.94
24K ~ 36K	mm	946	410	810	672.96	454.8
	inch	37.24	16.14	31.89	26.49	17.19

Outdoor - Heat Pump			
System	**Outdoor Model #**		37MARAQ24AA3
	Outdoor Size		24000
Electrical	Voltage, Phase, Cycle	V/Ph/Hz	208-230/1/60
	MCA	A.	24
	MOPA	A.	25
	SCCR	kA	5
Operating Range	Cooling Outdoor DB Min - Max	°F(°C)	-13~122(-25～50)
	Heating Outdoor DB Min - Max	°F(°C)	-13~75(-25～24)
Piping	Min. Piping Length	ft (m)	9.8 (3)
	Standard Piping Length	ft. (m)	24.6 (7.5)
	Total Piping Length	ft (m)	164.04(50)
	Piping Lift*	ft (m)	82.02(25)
	Pipe Connection Size - Liquid	in (mm)	3/8in(9.52mm)
	Pipe Connection Size - Suction	in (mm)	5/8in(15.9mm)
Refrigerant	Refrigerant Type		R454B
	Charge	lbs (kg)	4.41(2.0)
	Add'l Refrigerant (between Std & Max Piping Lengths)	Oz/ft (g/m)	0.32(30)
Outdoor Coil	Face Area	Sq. Ft.	8.18
	No. Rows		2.6
	Fins per inch		20
	Circuits		6
Compressor	Type		ROTARY
	Model		KTM240D46UKT2
	Oil Type		ESTER OIL
	Oil Charge	Fl. Oz.	20.97
	Rated Current	RLA	1.05
Airflow & Sound	Airflow	CFM	2237.9
	Sound Pressure	dB(A)	58
Dimensions	Height	in (mm)	31.89(810)
	Width	in (mm)	37.24(946)
	Depth	in (mm)	16.14(410)
	Net Weight	lbs (kg)	122.14(55.4)
	Shipping Height	in (mm)	34.84(885)
	Shipping Width	in (mm)	42.91(1090)
	Shipping Depth	in (mm)	19.68(500)
	Shipping Net Weight	lbs (kg)	132.28(60)

*** Condensing unit above or below indoor unit**

AHRI CERTIFIED www.ahridirectory.org Unitary Small HP AHRI Standard 210/240

Puron Advance™

Carrier Corporation Copyright 2024 • Atlanta, GA, 30339
SUBJECT TO CHANGE WITHOUT NOTICE

Outdoor Unit Heat Pump Ductless System

Outdoor Model: **37MARAQ36AA3**

Carrier

Turn to the experts

Job Data: _____ **Location:** _____

Tag #: _____ **Carrier#:** _____

Date: _____

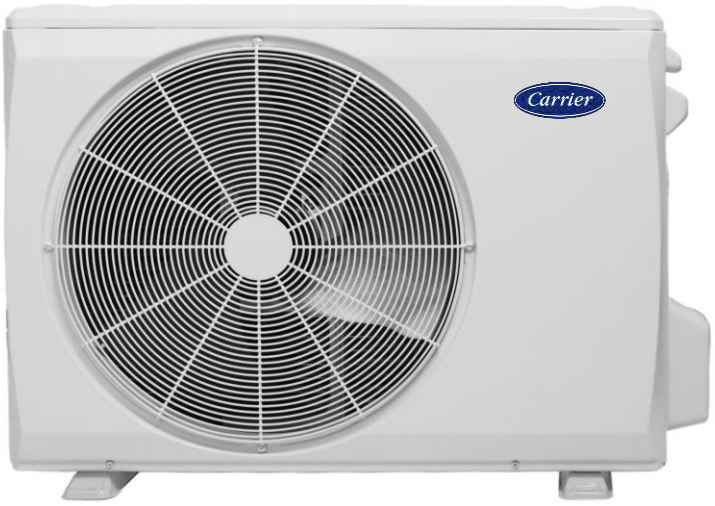

OUTDOOR STANDARD FEATURES

- Variable Speed (Inverter)
- Factory installed Base Pan Heater
- Factory installed Crankcase Heater
- Low Voltage Controls
- Auto-Restart function
- Condenser High Temp Protection
- Quiet operation
- Anti-corrosive fin coating

RESIDENTIAL APPLICATION LIMITED WARRANTY*

- Ten (10) years if properly registered within ninety (90) days after original installation, parts are warranted to the original purchaser for a period of ten (10) years. Otherwise, parts warranty is five (5) years.

NOTE: Images for illustration purposes only. Actual models may be slightly different.

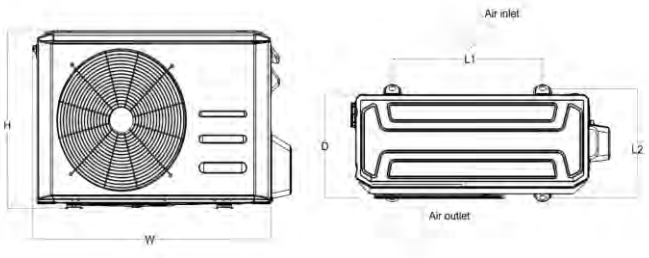

OUTDOOR UNIT DIMENSIONS						
Capacity	**Unit**	**W**	**D**	**H**	**L1**	**L2**
9K/12K	mm	765	303	555	452.4	313.82
	inch	30.12	11.93	21.85	17.81	12.36
18K	mm	890	342	673	663	379.59
	inch	35.04	13.46	26.5	26.1	14.94
24K ~ 36K	mm	946	410	810	672.96	454.8
	inch	37.24	16.14	31.89	26.49	17.19

Outdoor - Heat Pump			
System	**Outdoor Model #**		37MARAQ36AA3
	Outdoor Size		36000
Electrical	Voltage, Phase, Cycle	V/Ph/Hz	208-230/1/60
	MCA	A.	33
	MOPA	A.	35
	SCCR	kA	5
Operating Range	Cooling Outdoor DB Min - Max	°F(°C)	5~122(-15~50)
	Heating Outdoor DB Min - Max	°F(°C)	5~75(-15~24)
Piping	Min. Piping Length	ft (m)	9.8 (3)
	Standard Piping Length	ft. (m)	24.6 (7.5)
	Total Piping Length	ft (m)	213.25(65)
	Piping Lift*	ft (m)	98.43(30)
	Pipe Connection Size - Liquid	in (mm)	3/8in(9.52mm)
	Pipe Connection Size - Suction	in (mm)	5/8in(15.9mm)
Refrigerant	Refrigerant Type		R454B
	Charge	lbs (kg)	7.05(3.2)
	Add'l Refrigerant (between Std & Max Piping Lengths)	Oz/ft (g/m)	0.32(30)
Outdoor Coil	Face Area	Sq. Ft.	8.14
	No. Rows		3
	Fins per inch		19
	Circuits		6
Compressor	Type		ROTARY
	Model		KTF250D22UMT
	Oil Type		ESTER OIL
	Oil Charge	Fl. Oz.	22.66
	Rated Current	RLA	1.21
Airflow & Sound	Airflow	CFM	2237.9
	Sound Pressure	dB(A)	63
Dimensions	Height	in (mm)	31.89(810)
	Width	in (mm)	37.24(946)
	Depth	in (mm)	16.14(410)
	Net Weight	lbs (kg)	150.36(68.2)
	Shipping Height	in (mm)	34.84(885)
	Shipping Width	in (mm)	42.91(1090)
	Shipping Depth	in (mm)	19.68(500)
	Shipping Net Weight	lbs (kg)	160.28(72.7)

*** Condensing unit above or below indoor unit**

AHRI CERTIFIED www.ahridirectory.org Unitary Small HP AHRI Standard 210/240

C SP US

Puron Advance™

Carrier Corporation Copyright 2024 • Atlanta, GA, 30339
SUBJECT TO CHANGE WITHOUT NOTICE

Outdoor Heat Pump Ductless System

Outdoor Model: **37MBRAQ48AA3**

Carrier

Turn to the experts

Job Data: _____ **Location:** _____

Tag #: _____ **Carrier#:** _____

Date: _____

OUTDOOR STANDARD FEATURES

- Variable Speed (Inverter)
- Factory installed Base Pan Heater
- Factory installed Crankcase Heater
- Low Voltage Controls
- Auto-Restart function
- Condenser High Temp Protection
- Quiet operation
- Anti-corrosive fin coating

RESIDENTIAL APPLICATION LIMITED WARRANTY*

• Ten (10) years if properly registered within ninety (90) days after original installation, parts are warranted to the original purchaser for a period of ten (10) years. Otherwise, parts warranty is five (5) years.

NOTE: Images for illustration purposes only. Actual models may be slightly different.

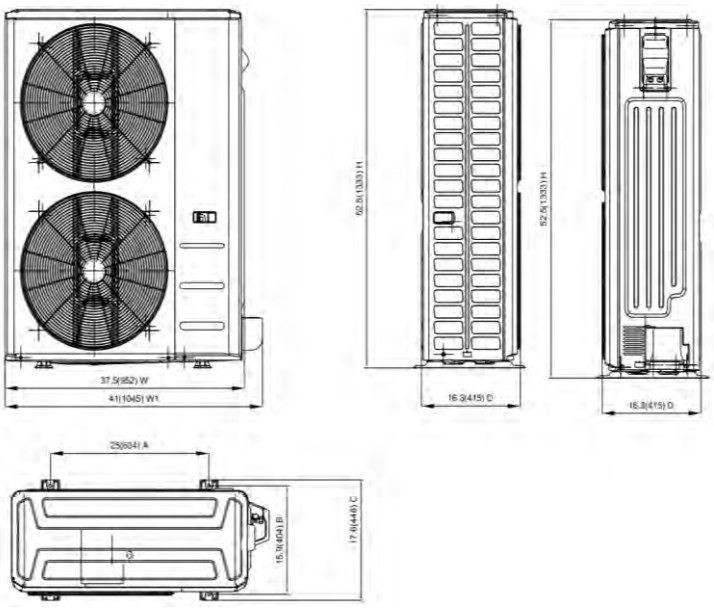

Outdoor - Heat Pump			
System	**Outdoor Model #**		37MBRAQ48AA3
	Outdoor Size		48000
Electrical	Voltage, Phase, Cycle	V/Ph/Hz	208-230/1/60
	MCA	A.	39
	MOPA	A.	40
	SCCR	kA	5
Operating Range	Cooling Outdoor DB Min - Max	°F(°C)	-13~122(-25～50)
	Heating Outdoor DB Min - Max	°F(°C)	-13~75(-25～24)
Piping	Min. Piping Length	ft (m)	9.8 (3)
	Standard Piping Length	ft. (m)	24.6 (7.5)
	Total Piping Length	ft (m)	246(75)
	Piping Lift*	ft (m)	98.4(30)
	Pipe Connection Size - Liquid	in (mm)	3/8"(9.52)
	Pipe Connection Size - Suction	in (mm)	3/4"(19)
Refrigerant	Refrigerant Type		R454B
	Charge	lbs (kg)	7.94(3.6)
	Add'l Refrigerant (between Std & Max Piping Lengths)	Oz/ft (g/m)	0.32(30)
Outdoor Coil	Face Area	Sq. Ft.	6.61
	No. Rows		2
	Fins per inch		22
	Circuits		10
Compressor	Type		TWIN-ROTARY
	Model		EKPQ420D1UMUA
	Oil Type		ESTER OIL
	Oil Charge	Fl. Oz.	47.35
	Rated Current	RLA	7
Airflow & Sound	Airflow	CFM	4240.3
	Sound Pressure	dB(A)	62.5
Dimensions	Height	in (mm)	52.48(1333)
	Width	in (mm)	37.48(952)
	Depth	in (mm)	16.34(415)
	Net Weight	lbs (kg)	208.78(94.7)
	Shipping Height	in (mm)	57.48(1460)
	Shipping Width	in (mm)	43.11(1095)
	Shipping Depth	in (mm)	19.49(495)
	Shipping Net Weight	lbs (kg)	237.44(107.7)

*** Condensing unit above or below indoor unit**

AHRI CERTIFIED www.ahridirectory.org Unitary Small HP AHRI Standard 210/240

Puron Advance™

Carrier Corporation Copyright 2024 • Atlanta, GA, 30339
SUBJECT TO CHANGE WITHOUT NOTICE

Air Handler Heat Pump Ductless System

Indoor Model: 45MBAAQ24XB3

Turn to the experts

Job Data:

Tag #:

Date:

Location:

Carrier#:

INDOOR STANDARD FEATURES

- Modes: Cool, Heat, Dry, Fan, Auto
- 4-way installation (Up flow, Down flow, Right, Left)
- Auto-Restart function
- Quiet indoor operation
- Aluminum hydrophilic pre-coated fins

RESIDENTIAL APPLICATION LIMITED WARRANTY*

- Ten (10) years if properly registered within ninety (90) days after original installation, parts are warranted to the original purchaser for a period of ten (10) years. Otherwise, parts warranty is five (5) years.

NOTE: Images for illustration purposes only. Actual models may be slightly different.

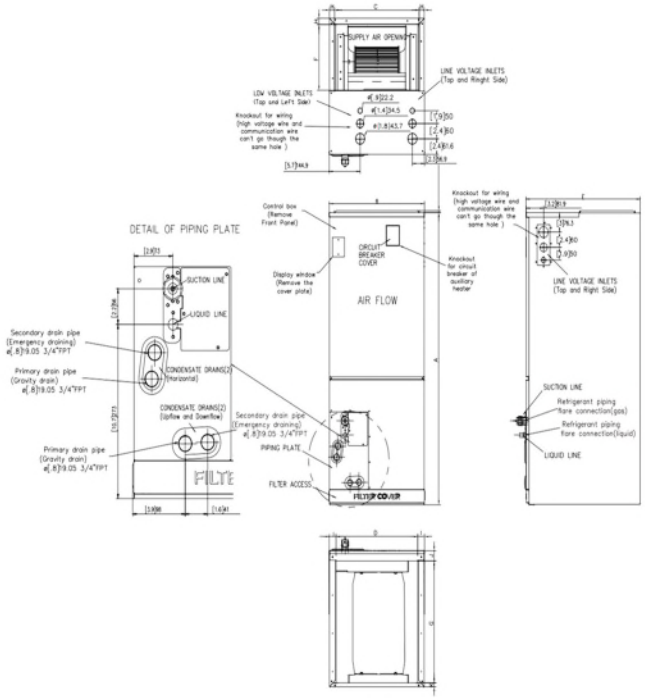

45MBAAQ24XB3			
System	**Indoor Model #**		45MBAAQ24XB3
	Indoor Size		24000
Electrical	Voltage, Phase, Cycle	V/Ph/Hz	208-230/1/60
	Power Supply		Indoor unit powered by outdoor unit
	MCA	A.	4
Operating Range	Cooling Indoor DB Min - Max	°F(°C)	60~90 (16～32)
	Heating Indoor DB Min - Max	°F(°C)	32~86 (0～30)
Indoor Coil	Face Area	Sq. Ft.	3
	No. Rows		3
	Fins per inch		20
	Circuits		6
Indoor Unit	Number of Fan Speeds		550/510/450
	Airflow (highest to lowest)	CFM	824.0 / 759.3 / 694.5 / 629.8 / -
	Sound Pressure (highest to lowest)	dB(A)	N\A/43.5/40/25.5/N\A
Dimensions	Height	in (mm)	45.00(1143)
	Width	in (mm)	17.52(445)
	Depth	in (mm)	21.02(534)
	Net Weight	lbs (kg)	104.28(47.3)
	Shipping Height	in (mm)	21.20(640)
	Shipping Width	in (mm)	48.23(1225)
	Shipping Depth	in (mm)	21.06(535)
	Shipping Net Weight	lbs (kg)	125.88(57.1)
CONTROLS			
Standard	Wireless Remote Controller (°F/°C Convertible)		
Optional	Wired Remote Control 7 Day Programmable		KSACN1401AAA
	24V Mini Interface		KSAIC0601230

INDOOR UNIT DIMENSIONS

Dimensions		18K/24K		36K	
		Inch	mm	Inch	mm
A	Model Height	45	1143	49	1245
B	Model Width	17.5	445	21	534
C	S.A. Opening Width	15.6	397	19.1	486
D	R.A. Opening Width	15.1	384	18.6	473
E	Model Depth	21	534	21	534
F	S.A. Opening Depth	10.3	260	10.3	260
G	R.A. Opening Depth	18.8	476	18.8	476
H	S.A. Opening Clearance	0.9	24	0.9	24
I	R.A. Opening Side Clearance	1.3	32	1.3	32
J	R.A. Opening Front Clearance	1.5	38	1.6	41
K	R.A. Opening Back Clearance	0.6	16	0.6	16

Carrier Corporation Copyright 2024 • Atlanta, GA, 30339
SUBJECT TO CHANGE WITHOUT NOTICE

Puron Advance™

Air Handler Heat Pump Ductless System

Indoor Model: 45MBAAQ36XB3

Turn to the experts

Job Data:

Tag #:

Date:

Location:

Carrier#:

INDOOR STANDARD FEATURES

- Modes: Cool, Heat, Dry, Fan, Auto
- 4-way installation (Up flow, Down flow, Right, Left)
- Auto-Restart function
- Quiet indoor operation
- Aluminum hydrophilic pre-coated fins

RESIDENTIAL APPLICATION LIMITED WARRANTY*

- Ten (10) years if properly registered within ninety (90) days after original installation, parts are warranted to the original purchaser for a period of ten (10) years. Otherwise, parts warranty is five (5) years.

NOTE: Images for illustration purposes only. Actual models may be slightly different.

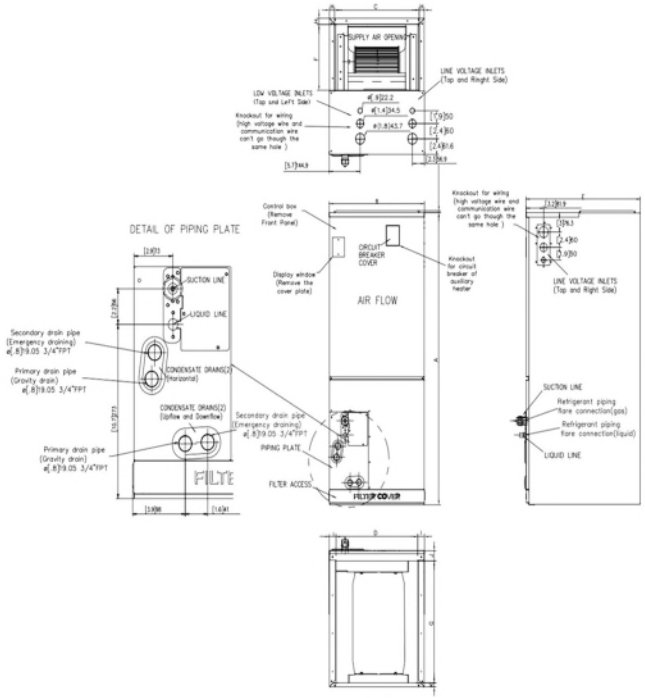

45MBAAQ36XB3			
System	**Indoor Model #**		45MBAAQ36XB3
	Indoor Size		36000
Electrical	Voltage, Phase, Cycle	V/Ph/Hz	208-230/1/60
	Power Supply		Indoor unit powered by outdoor unit
	MCA	A.	6
Operating Range	Cooling Indoor DB Min - Max	°F(°C)	60~90 (16～32)
	Heating Indoor DB Min - Max	°F(°C)	32~86 (0～30)
Indoor Coil	Face Area	Sq. Ft.	4.13
	No. Rows		4
	Fins per inch		20
	Circuits		10
Indoor Unit	Number of Fan Speeds		685/620/560
	Airflow (highest to lowest)	CFM	1189.0 / 1083.0 / 971.2 / 865.2 / N\A
	Sound Pressure (highest to lowest)	dB(A)	N\A/48/44/35/N\A
Dimensions	Height	in (mm)	49.02(1245)
	Width	in (mm)	21.02(534)
	Depth	in (mm)	21.02(534)
	Net Weight	lbs (kg)	127.87(58)
	Shipping Height	in (mm)	21.20(640)
	Shipping Width	in (mm)	52.17(1325)
	Shipping Depth	in (mm)	24.61(625)
	Shipping Net Weight	lbs (kg)	154.10(69.9)
CONTROLS			
Standard	Wireless Remote Controller (°F/°C Convertible)		
Optional	Wired Remote Control 7 Day Programmable		KSACN1401AAA
	24V Mini Interface		KSAIC0601230

INDOOR UNIT DIMENSIONS					
Dimensions		18K/24K		36K	
		Inch	mm	Inch	mm
A	Model Height	45	1143	49	1245
B	Model Width	17.5	445	21	534
C	S.A. Opening Width	15.6	397	19.1	486
D	R.A. Opening Width	15.1	384	18.6	473
E	Model Depth	21	534	21	534
F	S.A. Opening Depth	10.3	260	10.3	260
G	R.A. Opening Depth	18.8	476	18.8	476
H	S.A. Opening Clearance	0.9	24	0.9	24
I	R.A. Opening Side Clearance	1.3	32	1.3	32
J	R.A. Opening Front Clearance	1.5	38	1.6	41
K	R.A. Opening Back Clearance	0.6	16	0.6	16

Carrier Corporation Copyright 2024 • Atlanta, GA, 30339
SUBJECT TO CHANGE WITHOUT NOTICE

Puron Advance™

Air Handler Heat Pump Ductless System

Indoor Model: **45MBAAQ48XA3**

Carrier

Turn to the experts

Job Data:

Tag #:

Date:

Location:

Carrier#:

INDOOR STANDARD FEATURES

- Modes: Cool, Heat, Dry, Fan, Auto
- 4-way installation (Up flow, Down flow, Right, Left)
- Auto-Restart function
- Quiet indoor operation
- Aluminum hydrophilic pre-coated fins

RESIDENTIAL APPLICATION LIMITED WARRANTY*

- Ten (10) years if properly registered within ninety (90) days after original installation, parts are warranted to the original purchaser for a period of ten (10) years. Otherwise, parts warranty is five (5) years.

NOTE: Images for illustration purposes only. Actual models may be slightly different.

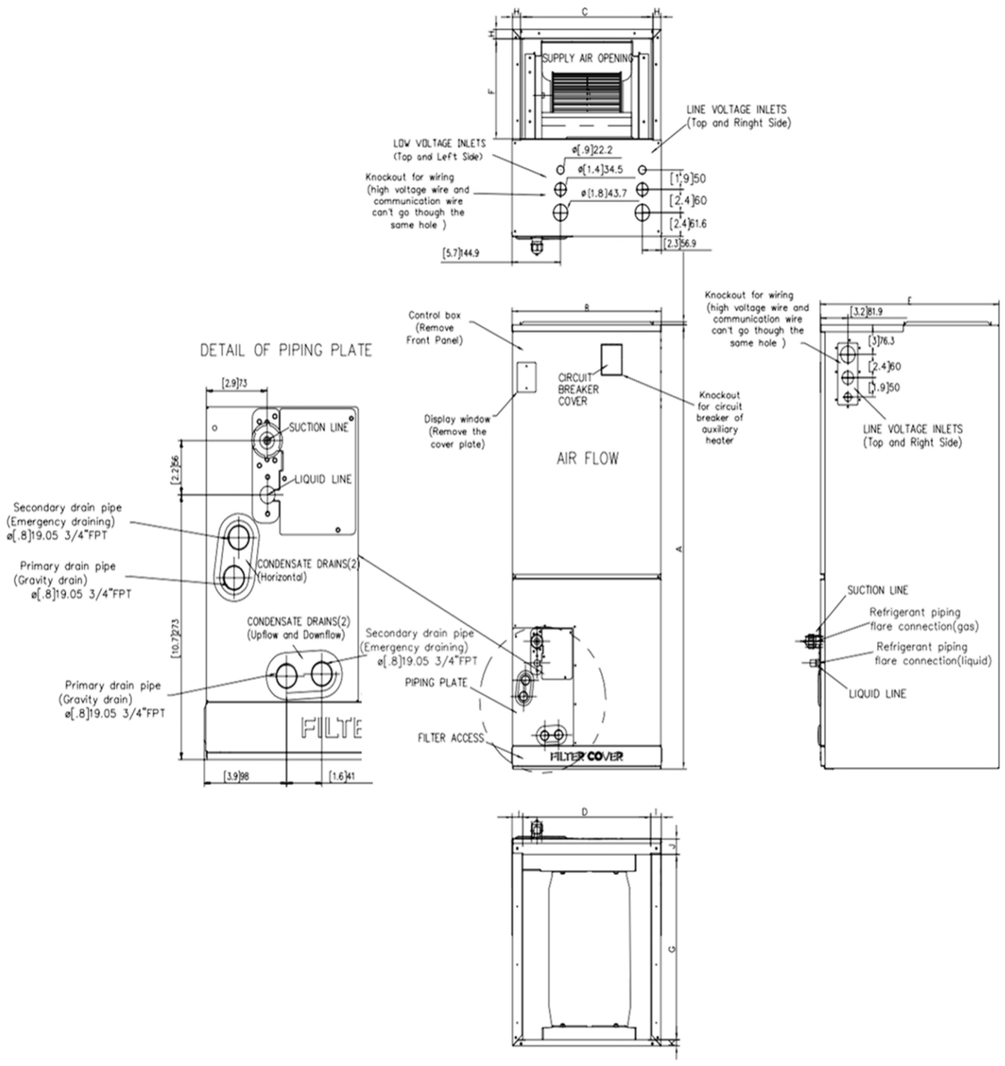

45MBAAQ48XA3			
System	**Indoor Model #**		45MBAAQ48XA3
	Indoor Size		48000
Electrical	Voltage, Phase, Cycle	V/Ph/Hz	208-230/1/60
	Power Supply	Indoor unit powered by outdoor unit	
	MCA	A.	9.75
Operating Range	Cooling Indoor DB Min - Max	°F(°C)	60~90(16～32)
	Heating Indoor DB Min - Max	°F(°C)	32~86(0～30)
Indoor Coil	No. Rows		5
	Fins per inch		20
	Circuits		14
Indoor Unit	Number of Fan Speeds		820/720/615
	Airflow (highest to lowest)	CFM	1601.0 / 1471.5 / 1283.1 / 1094.8 / /
	Sound Pressure (highest to lowest)	dB(A)	54.5/51/48
Dimensions	Height	in (mm)	52.99(1346)
	Width	in (mm)	24.49(622)
	Depth	in (mm)	21.02(534)
	Net Weight	lbs (kg)	161.82(73.4)
	Shipping Height	in (mm)	21.20(640)
	Shipping Width	in (mm)	56.30(1430)
	Shipping Depth	in (mm)	28.15(715)
	Shipping Net Weight	lbs (kg)	191.58(86.9)
CONTROLS			
Standard	Wireless Remote Controller (°F/°C Convertible)		
Optional	Wired Remote Control 7 Day Programmable		KSACN1401AAA
	24V Mini Interface		KSAIC0601230

INDOOR UNIT DIMENSIONS					
Dimensions		36K		48K/60K	
		Inch	mm	Inch	mm
A	Model Height	49	1245	53	1346
B	Model Width	21	534	24.5	622
C	S.A. Opening Width	19.1	486	22.6	575
D	R.A. Opening Width	18.6	473	22.1	562
E	Model Depth	21	534	21	534
F	S.A. Opening Depth	10.3	260	10.3	260
G	R.A. Opening Depth	18.8	476	18.8	476
H	S.A. Opening Clearance	0.9	24	0.9	24
I	R.A. Opening Side Clearance	1.3	32	1.1	28
J	R.A. Opening Front Clearance	1.6	41	1.6	41
K	R.A. Opening Back Clearance	0.6	16	0.8	19

Carrier Corporation Copyright 2024 • Atlanta, GA, 30339
SUBJECT TO CHANGE WITHOUT NOTICE

AHRI CERTIFIED™ www.ahridirectory.org
Unitary Small HP
AHRI Standard 210/240
Certification applies only when the complete system is listed with AHRI.

C SA US

Puron Advance™

SUBMITTAL

Project

Climatec - City of Esc - Fire Station 5

Date

Saturday, April 12, 2025

Shawn Harlan
Sigler - Brea
205 Puente Street
Brea CA

Table Of Contents

Project: Climatec - City of Esc - Fire Station 5

04/12/2025
Prepared By: Shawn Harlan

FS 5 ID1 ..... **3**
Unit Report 4
Performance Summary 5
System Parameters 5
Electrical Data 5
Acoustic Summary 6
Certified Drawing 7

FS 5 ID1

Submittal Cover Sheet
Unit Report
Performance Summary Report
Acoustic Summary
Certified Drawings

Unit Report For FS 5 ID1

Project: Climatec - City of Esc - Fire Station 5

04/12/2025
Prepared By: Shawn Harlan

Outdoor Unit Parameters

Unit Model:	**27SCA**	
Unit Size:	**2 Tons (Size 24)**	
Voltage:	**208/230-1-60**	V-Ph-Hz

Indoor Coil Parameters

Unit Model:	**FT5A**	
Unit Size:	**24,000 Btuh**	
Cabinet Insulation:	**Singular, TXV**	
Voltage:	**208-1-60**	V-Ph-Hz
Refrigerant Type:	**Puron Advance**	
Heating Size:	**No Heat**	

Outdoor Unit Dimensions and Weight

Unit Length:	**31.1875**	in
Unit Width:	**31.1875**	in
Unit Height:	**35.5**	in
Unit Shipping Weight:	**196.**	lb

Indoor Coil Dimensions and Weight

Unit Length:	**22.06**	in
Unit Width:	**17.6**	in
Unit Height:	**42.69**	in
Unit Shipping Weight:	**124.**	lb

RESIDENTIAL APPLICATIONS

This warranty is to the original purchasing owner and subsequent owners only to the extent and as stated in the Warranty Conditions and below. The limited warranty period in years, depending on the part and the claimant, is as shown in the table below.

Limited Warranty (Years)		
Item	**Original Owner**	**Subsequent Owner**
Parts	10* (or 5)	5
Compressor	10* (or 5)	5

***If properly registered within 90 days of original installation, otherwise 5 years (except in California and Quebec and other jurisdictions that prohibit warranty benefits conditioned on registration). See Warranty Conditions below.**

OTHER APPLICATIONS

The warranty period is five (5) years on the compressor, and one (1) year on all other parts. The warranty is the original owner only and is not available for subsequent owners.

Ordering Information

Part Number	Description	Quantity
Outdoor Unit		
27SCA524A003	27SCA Comfort Single Stage Heat Pump with Puron Refrigerant Advanced 2 Tons Cooling	1
	15 SEER @ ARI Conditions	
Indoor Coil		
FT5ANXB24L00	Performance Series Fan Coil with Puron Advance 208/230-1-60	1
	Singular, TXV	
	Aluminum	

The Product and Ratings Data in this program is subject to change at any time and without notice. Please refer to the latest product literature and the AHRI directory at www.ahridirectory.org for the most up-to-date information.

Performance Summary For FS 5 ID1

Project: Climatec - City of Esc - Fire Station 5

04/12/2025
Prepared By: Shawn Harlan

System Performance

System:	**27SCA/FT5A**	
System Quantity:	**1**	
Altitude:	**0.0**	ft
Linear Pipe Length:	**0.0**	ft
COP @ 47 F:	**3.88**	
COP @ 17 F:	**2.62**	
SEER @ ARI Conditions:	**15.5**	
EER @ ARI Conditions:	**12.0**	
HSPF @ ARI Conditions:	**7.8**	

Actual Clg Airflow:	**800.0**	CFM
Standard Clg Airflow:	**800.0**	CFM
Total Net Clg Capacity:	**22.81**	MBH
Net Sensible Clg Capacity:	**17.23**	MBH
Htg HP Capacity:	**24.06**	MBH
Htg HP Integrated Capacity:	**24.06**	MBH
Heating HP Compressor Power:	**1.73**	kW
Total System Power:	**2.41**	kW

System Parameters

Outdoor Unit Parameters

Unit Model:	**27SCA524A003**	
Unit Size (Nominal):	**2 Tons (Size 24)**	
Voltage:	**208/230-1-60**	V-Ph-Hz
Clg Ent Air DB Ambient:	**95.0**	°F
Htg Ent Air DB Ambient:	**47.0**	°F

Indoor Coil Parameters

Unit Model:	**FT5ANXB24L00**	
Unit Size (Nominal):	**24,000 Btuh**	
Voltage:	**208-1-60**	V-Ph-Hz
Ent Air DB:	**80.00**	°F
Ent Air WB:	**67.00**	°F
Ent Enthalpy:	**31.44**	BTU/lb
Lvg Air DB:	**60.05**	°F
Lvg Air WB:	**58.11**	°F
Lvg Enthalpy:	**25.10**	BTU/lb
Htg Ent Air DB:	**70.0**	°F
Htg Lvg Air DB:	**97.8**	°F
Heating Size (Nominal):	**No Heat**	
Total External Static Pressure:	**0.50**	in wg

Electrical Data

Outdoor Electrical Data

Unit Voltage:	**208/230-1-60**	V-Ph-Hz
Fan Motor FLA:	**0.60**	Amps
MCA:	**13.5**	Amps
Max Fuse:	**20**	Amps
Operating Range Min:	**197**	V
Operating Range Max:	**253**	V
Compressor RLA:	**10.3**	Amps
Compressor LRA:	**64.4**	Amps

Indoor Electrical Data:

(For units with no factory installed electric heaters)

Unit Voltage:	**208-1-60**	V-Ph-Hz
Unit FLA:	**4.0**	Amps
Unit MCA:	**5.0**	Amps
Unit MOCP:	**15.0**	Amps
Unit Min Wire Size:	**14.0**	
Unit Fuse/Ckt Bkr Amps:	**15.0**	Amps
Motor HP:	**1/2**	HP

Notice: Indoor Elect. data is for 208-1-60 voltage

The Product and Ratings Data in this program is subject to change at any time and without notice. Please refer to the latest product literature and the AHRI directory at www.ahridirectory.org for the most up-to-date information.

Acoustic Summary For FS 5 ID1

Project: Climatec - City of Esc - Fire Station 5

04/12/2025
Prepared By: Shawn Harlan

Outdoor Unit Parameters:

27SCA ..... Unit Model:
2 Tons (Size 24) ..... Unit Size:
Standard ..... Variations:

Octave Band Center Frequency, Hz	125	250	500	1k	2k	4k	8k	dBA
Sound Power,dB	66.3	64.7	64.2	64.4	59.2	55.6	54.7	
A-Weighted Sound Power, dBA								71.0

Indoor Coil Parameters:

FT5A ..... Unit Model:
24,000 Btuh ..... Unit Size:
Singular, TXV ..... Cabinet Insulation:

Octave Band Center Frequency, Hz	63	125	250	500	1k	2k	4k
Sound Power,dB	72.0	68.0	64.0	61.0	59.0	57.0	53.0

The Product and Ratings Data in this program is subject to change at any time and without notice. Please refer to the latest product literature and the AHRI directory at www.ahridirectory.org for the most up-to-date information.

Certified Drawing For FS 5 ID1

Project: Climatec - City of Esc - Fire Station 5
Prepared By: Shawn Harlan

04/12/2025

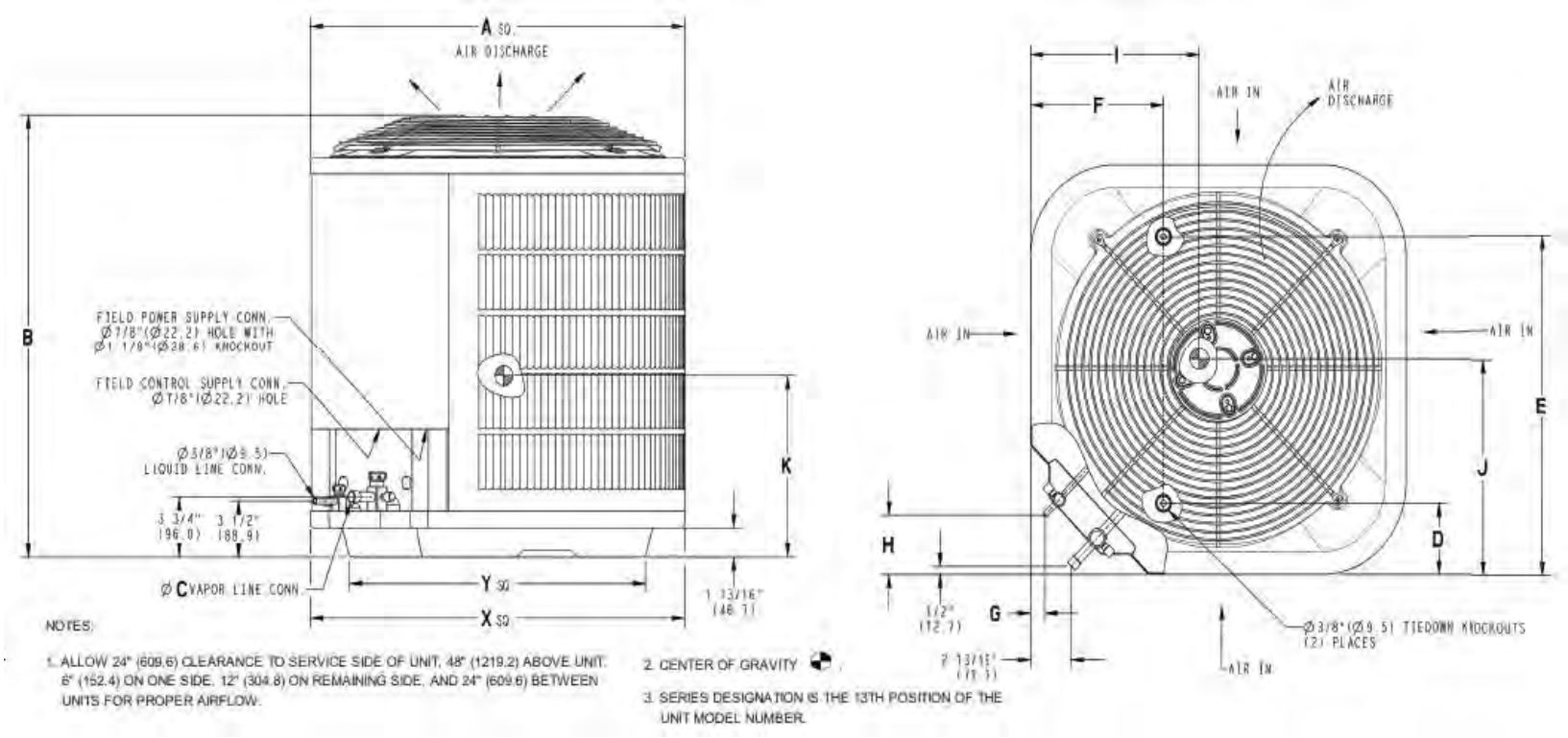

Outdoor Model

Unit Model: **27SCA**
Unit Size: **2 Tons (Size 24)**
Voltage: **208/230-1-60** V-Ph-Hz
SEER: **15**
PartNumber: **27SCA524A003**

Shipping Dimensions and Weights	Outdoor Unit
Height	39.81 in
Width	34.25 in
Length	34.25 in
Operating Weight	176. lb
Shipping Weight	196. lb

Dimensions										
A	B	C	D	E	F	G	H	I	J	K
31.19 in	35.50 in	0.63 in	6.56 in	24.69 in	9.13 in	1.13 in	3.81 in	13.00 in	15.13 in	16.50 in

The Product and Ratings Data in this program is subject to change at any time and without notice. Please refer to the latest product literature and the AHRI directory at www.ahridirectory.org for the most up-to-date information.

Certified Drawing For FS 5 ID1

Project: Climatec - City of Esc - Fire Station 5
Prepared By: Shawn Harlan

04/12/2025

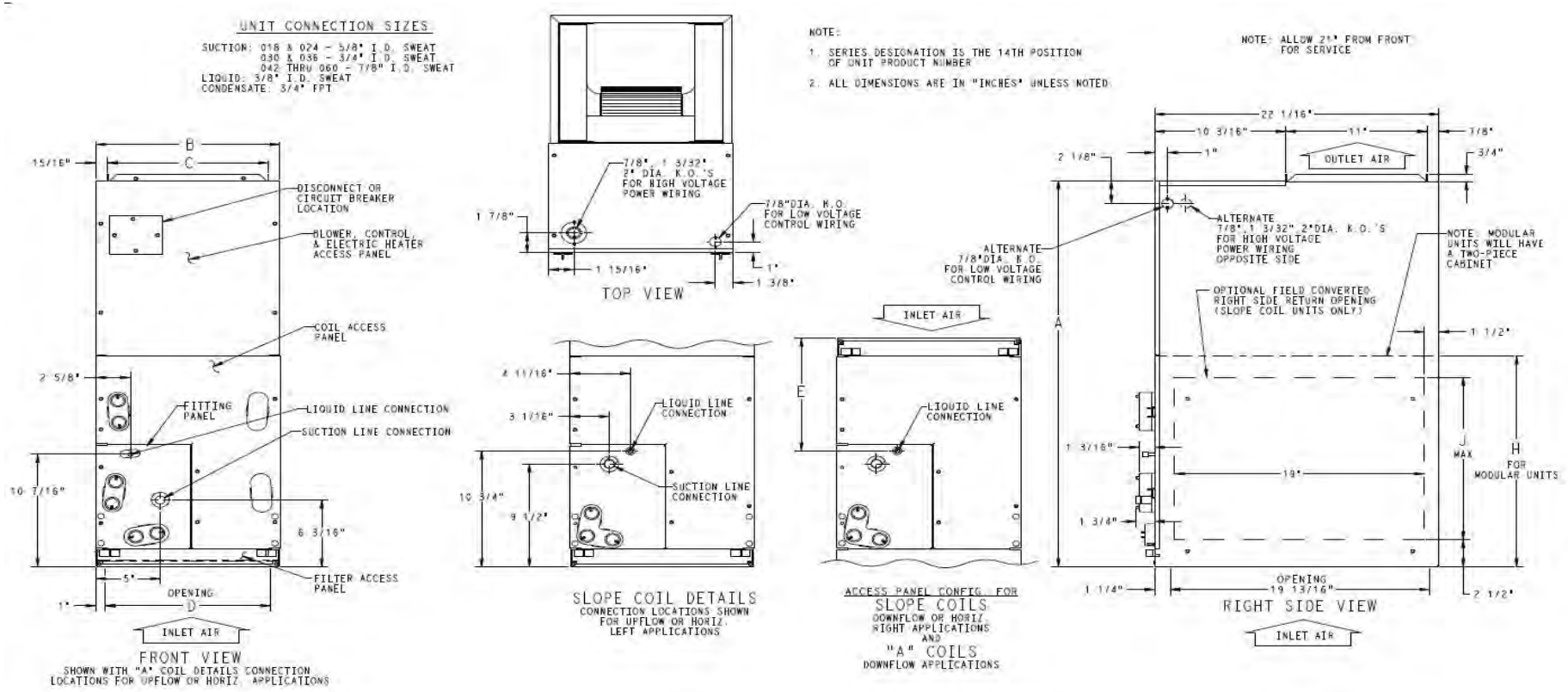

Indoor Coil

Unit Model: **FT5A**
Unit Size: **24,000 Btuh**
Voltage: **208-1-60** V-Ph-Hz
Cabinet Insulation: **Singular, TXV**
PartNumber: **FT5ANXB24L00**

Dimensions and Weights	Indoor Coil
Height	42.69 in
Width	17.63 in
Length	22.06 in
Shipping Weight	124. lb

Dimensions								
A	B	C	D	E	F	G	H	J
42.69 in	17.63 in	15.75 in	15.63 in	10.75 in	18.56 in	18.25 in	--	--

The Product and Ratings Data in this program is subject to change at any time and without notice. Please refer to the latest product literature and the AHRI directory at www.ahridirectory.org for the most up-to-date information.

Certified Drawing For FS 5 ID1

Project: Climatec - City of Esc - Fire Station 5
Prepared By: Shawn Harlan

04/12/2025

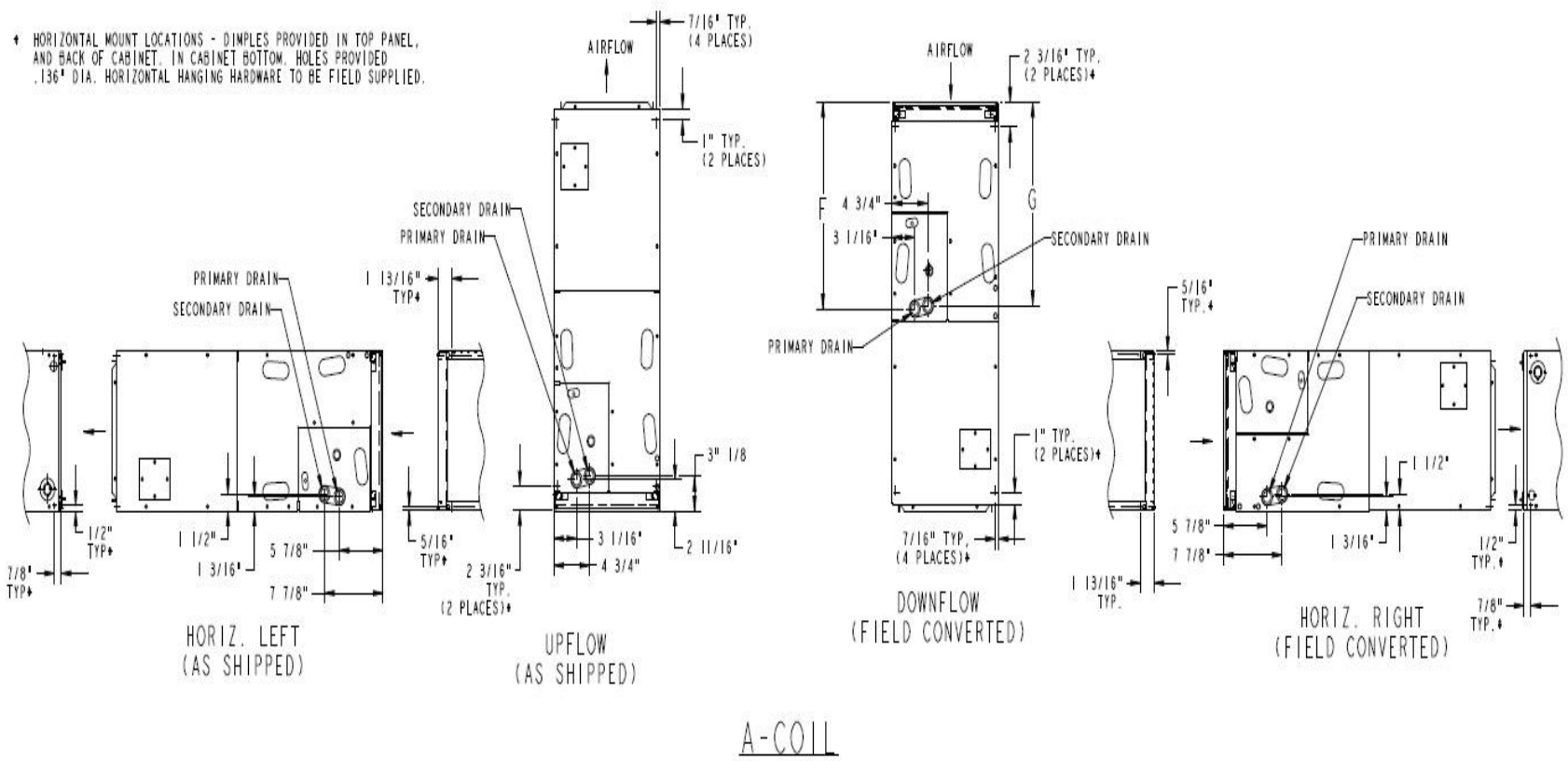

A-COIL

Indoor Coil

Unit Model:	**FT5A**	
Unit Size:	**24,000 Btuh**	
Voltage:	**208-1-60**	V-Ph-Hz
PartNumber:	**FT5ANXB24L00**	

The Product and Ratings Data in this program is subject to change at any time and without notice. Please refer to the latest product literature and the AHRI directory at www.ahridirectory.org for the most up-to-date information.

SUBMITTAL

Project

Climatec - City of Esc - Fire Station 6

Date

Saturday, April 12, 2025

Shawn Harlan
Sigler - Brea
205 Puente Street
Brea CA

Table Of Contents

Project: Climatec - City of Esc - Fire Station 6 04/12/2025
Prepared By: Shawn Harlan 08:29AM

ID 1,2 **3**
Unit Report 4
Certified Drawing 5
Performance Summary 8
ID 3,5 **11**
Unit Report 12
Certified Drawing 13
Performance Summary 16

ID 1,2

Tag Cover Sheet
Unit Report
Certified Drawing
Performance Report

Unit Report For ID 1,2

Project: Climatec - City of Esc - Fire Station 6 04/12/2025
Prepared By: Shawn Harlan 08:29AM

Unit Parameters

Unit Model: **50GEQM05A2M5-0A0A0**
Unit Size: **05 (4 Tons)**
Volts-Phase-Hertz: **208-3-60**
Heating Type: **Heat Pump**
Refrigerant: **R-454B**
Heat Control: **Two Stage Cooling, Single Circuit**
Duct Cfg: **Vertical Supply / Vertical Return**

Dimensions (ft. in.) & Weight (lb.) ***

Unit Length: **6' 2.375"**
Unit Width: **3' 10.625"**
Unit Height: **3' 5.375"**
Total Operating Weight: **607** lb

*** Weights and Dimensions are approximate. Weight does not include unit packaging. Approximate dimensions are provided primarily for shipping purposes. For exact dimensions and weights, refer to appropriate product data catalog.

Lines and Filters

Return Air Filter Type: **Throwaway**
Return Air Filter Quantity: **4**
Return Air Filter Size: **16 x 16 x 2**

Selection includes construction throwaway filter into the base fan curve.

Unit Configuration

Standard/Medium Static - EcoBlue Vane Axial Fan
Al/Cu - Al/Cu - Louvered Hail Guards
Standard Electromechanical Controls (can be used with field installed economizers and dampers)
Standard

Warranty Information

5-Year compressor parts (STD.)
1-Year parts (STD.)

No optional warranties were selected.

NOTE: Please see Warranty Catalog 500-089 for explanation of policies and ordering methods.

Ordering Information

Part Number	Description	Quantity
50GEQM05A2M5-0A0A0	Rooftop Unit	1

Certified Drawing for ID 1,2

Project: Climatec - City of Esc - Fire Station 6
Prepared By: Shawn Harlan

04/12/2025
08:29AM

NOTES:

1. DIMENSIONS ARE IN INCHES, DIMENSIONS IN [ ] ARE IN MILLIMETERS.
2. CENTER OF GRAVITY
3. DIRECTION OF AIR FLOW
4. ALL VIEW DRAWN USING 3RD ANGLE

UNIT	J	K
50GEQ*04	33 3/8 [847]	18 5/8 [472]
50GEQ*05	41 3/8 [1051]	14 7/8 [378]
50GEQ*06	41 3/8 [1051]	14 7/8 [378]

Carrier

THIS DOCUMENT IS THE PROPERTY OF CARRIER CORPORATION AND IS DELIVERED UPON THE EXPRESS CONDITION THAT THE CONTENTS WILL NOT BE DISCLOSED OR USED WITHOUT CARRIER CORPORATION'S WRITTEN CONSENT.

SUBMISSION OF THESE DRAWINGS OR DOCUMENTS DOES NOT CONSTITUTE PART PERFORMANCE OR ACCEPTANCE OF CONTRACT.

	CONNECTION SIZES
A	1 3/8" [35] DIA FIELD POWER SUPPLY HOLE
B	2" [51] DIA POWER SUPPLY KNOCKOUT
C	1 3/4" [44] DIA GAUGE ACCESS PLUG
D	7/8" [22] DIA FIELD CONTROL WIRING HOLE
E	3/4"-14 NPT CONDENSATE DRAIN
G	2 1/2 " [64] DIA POWER SUPPLY KNOCK-OUT

THRU-THE-BASE CHART
THESE HOLES REQUIRED FOR USE CRBTMPWR008A00, 009A00

	THREADED CONDUIT SIZE	WIRE USE	REQ'D HOLE SIZES (MAX.)
W	1/2"	115V	7/8" [22.2]
X	1/2"	24V	7/8" [22.2]
Y *	3/4"	POWER	1 1/8" [28.6]
Z**	(009A00) 1/2" FPT	GAS	1 1/8" [28.6]
	FOR "THRU-THE-BASEPAN" FACTORY OPTION, FITTINGS FOR ONLY X,Y, & Z ARE PROVIDED		
*	SELECT EITHER 3/4" OR 1/2" FOR POWER, DEPENDING ON WIRE SIZE		
**	(008A00) PROVIDES 3/4" FPT THRU CURB FLANGE & FITTING.		

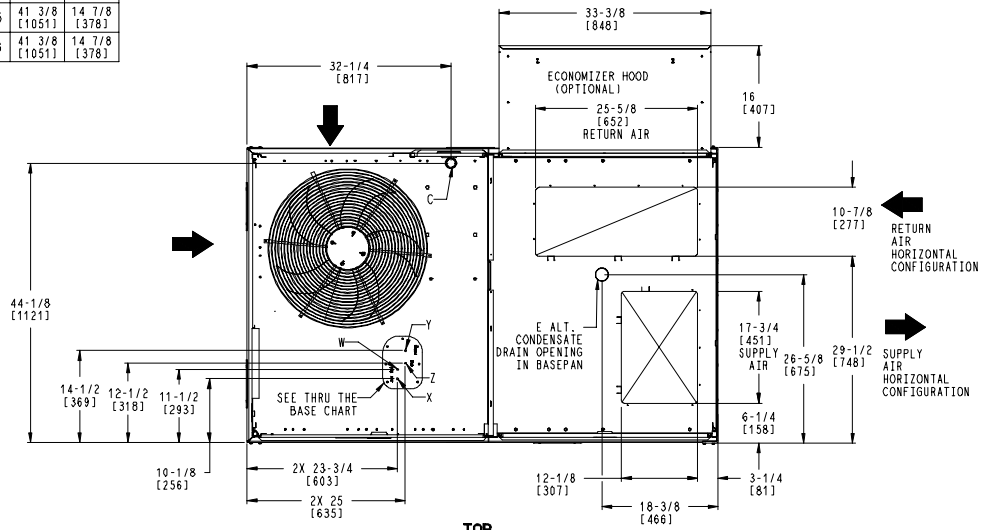

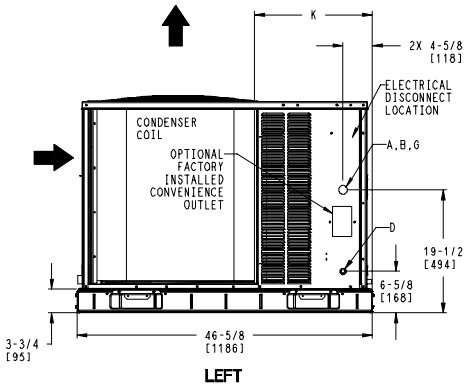

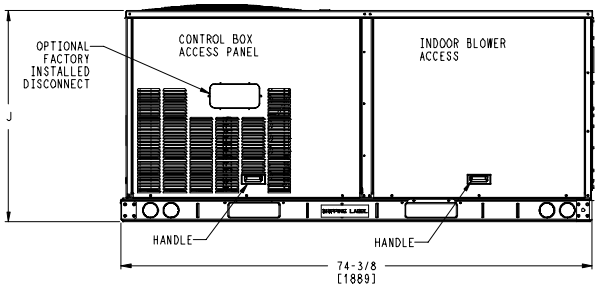

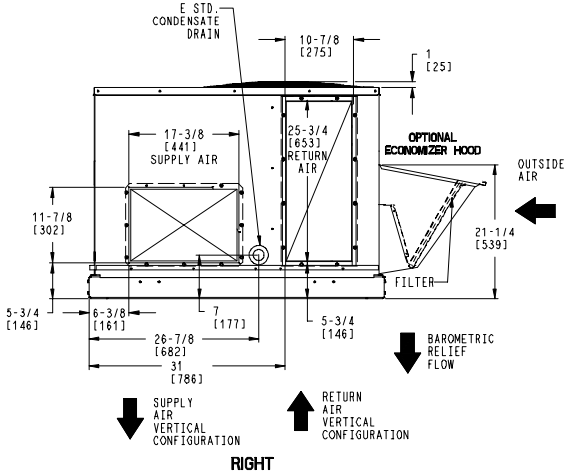

ITC CLASSIFICATION	SHEET	DATE	SUPERCEDES	50GEQ 04-06 SINGLE PACKAGE HEAT PUMP		REV
U.S. ECCN:NSR	1 OF 3	9/9/24	9/15/23		48TC006647	A

Certified Drawing for ID 1,2

Project: Climatec - City of Esc - Fire Station 6
Prepared By: Shawn Harlan

04/12/2025
08:29AM

UNIT	STD. UNIT WEIGHT *		CORNER WEIGHT (A)		CORNER WEIGHT (B)		CORNER WEIGHT (C)		CORNER WEIGHT (D)		C.G.		HEIGHT
	LBS.	KG.	LBS.	KG.	LBS.	KG.	LBS.	KG.	LBS.	KG.	X	Y	Z
50GEQ*04	475	215	128	58	120	54	110	50	117	53	36 [914]	22 3/8 [568]	16 1/8 [410]
50GEQ*05	594	269	163	74	148	67	135	61	149	68	35 3/8 [898]	22 5/16 [557]	16 1/2 [419]
50GEQ*06	596	270	163	74	148	67	135	61	149	68	35 3/8 [898]	22 5/16 [557]	16 1/2 [419]

*- STANDARD UNIT WEIGHT IS WITHOUT ELECTRIC HEAT AND WITHOUT PACKAGING.
FOR OTHER OPTIONS AND ACCESSORIES REFER TO THE PRODUCT DATA CATALOG.

Carrier
THIS DOCUMENT IS THE PROPERTY OF CARRIER CORPORATION AND IS DELIVERED UPON THE EXPRESS CONDITION THAT THE CONTENTS WILL NOT BE DISCLOSED OR USED WITHOUT CARRIER CORPORATION'S WRITTEN CONSENT.
SUBMISSION OF THESE DRAWINGS OR DOCUMENTS DOES NOT CONSTITUTE PART PERFORMANCE OR ACCEPTANCE OF CONTRACT.

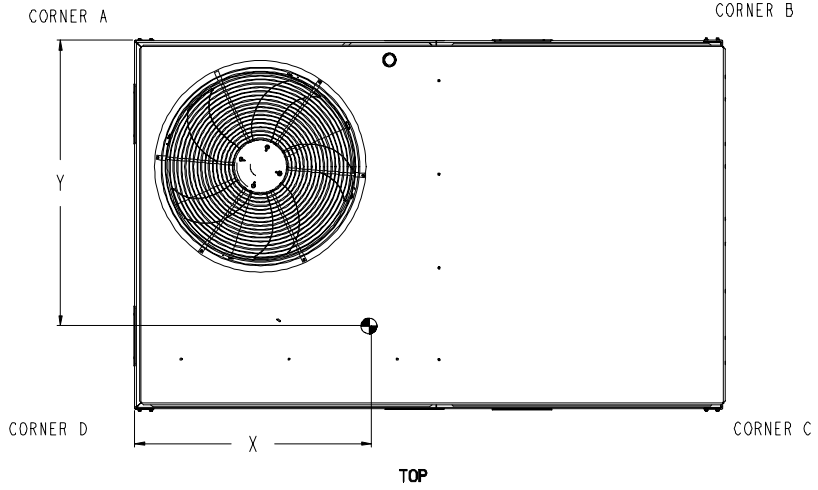

TOP

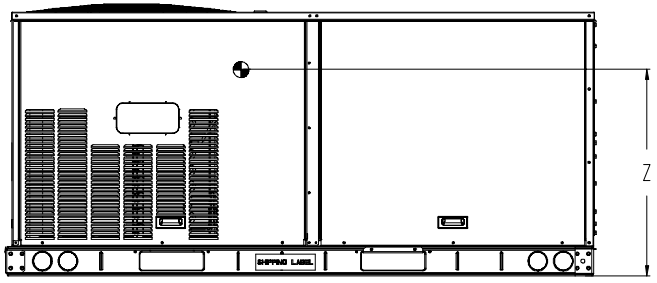

FRONT

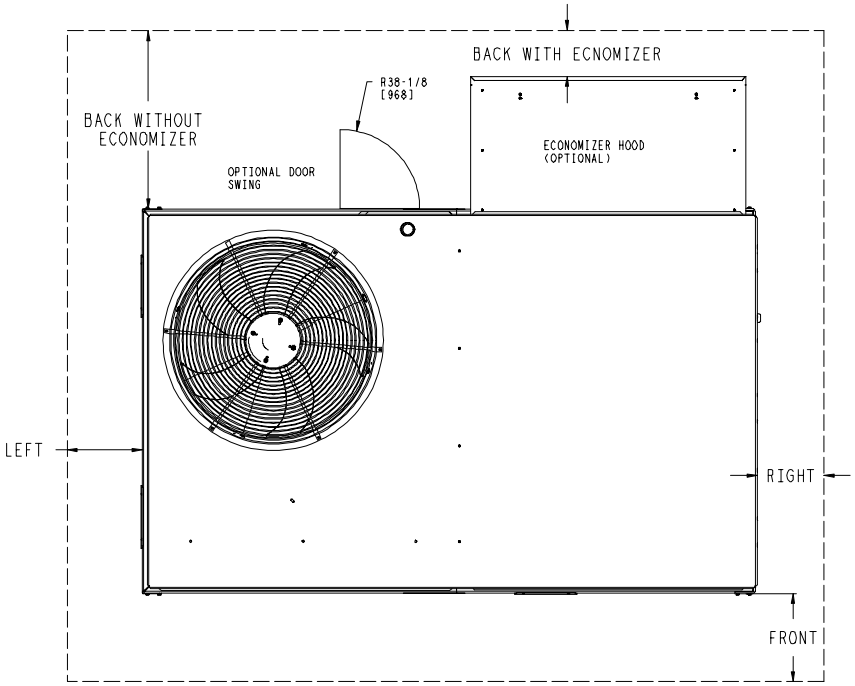

NOTE:

1. FOR ALL MINIMUM CLEARANCES LOCAL CODES OR JURISDICTIONS MAY PREVAIL.

CLEARANCE			
	SERVICE WITH:	SERVICE WITH:	OPERATING
SURFACE	CONDUCTIVE BARRIER	NONCONDUCTIVE BARRIER	CLEARANCE
FRONT	48 [1219mm]	36 [914mm]	18 [457mm]
LEFT	48 [1219mm]	42 [1067mm]	18 [457mm]
BACK W/O ECON	48 [1219mm]	42 [1067mm]	18 [457mm]
BACK W/ECON	36 [914mm]	36 [914mm]	18 [457mm]
RIGHT	36 [914mm]	36 [914mm]	18 [457mm]
TOP	72 [1829mm]	72 [1829mm]	72 [1829mm]

ITC CLASSIFICATION	SHEET	DATE	SUPERCEDES			REV
U.S. ECCN:NSR	2 OF 3	9/9/24	9/15/23	50GEQ 04-06 SINGLE PACKAGE HEAT PUMP	48TC006647	A

Certified Drawing for ID 1,2

Project: Climatec - City of Esc - Fire Station 6
Prepared By: Shawn Harlan

04/12/2025
08:29AM

Carrier | THIS DOCUMENT IS THE PROPERTY OF CARRIER CORPORATION AND IS DELIVERED UPON THE EXPRESS CONDITION THAT THE CONTENTS WILL NOT BE DISCLOSED OR USED WITHOUT CARRIER CORPORATION'S WRITTEN CONSENT. | SUBMISSION OF THESE DRAWINGS OR DOCUMENTS DOES NOT CONSTITUTE PART PERFORMANCE OR ACCEPTANCE OF CONTRACT.

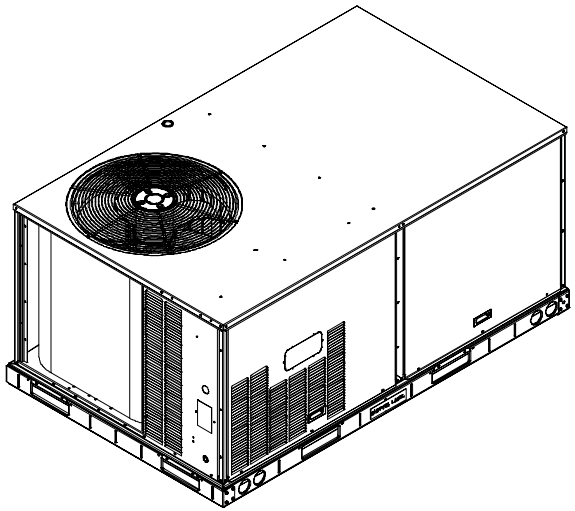

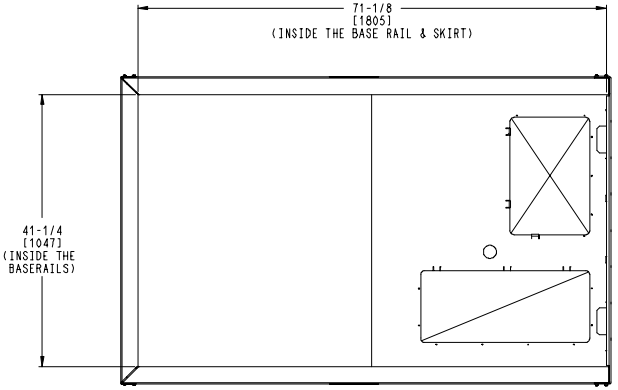

INSIDE BASERAIL DIMENSIONS
BOTTOM

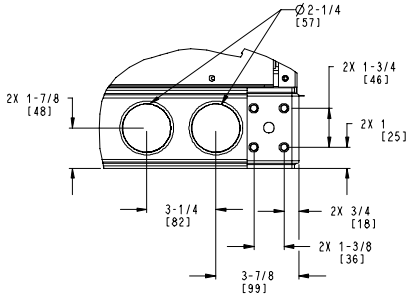

DETAIL **C**
TYP 4 PLCS

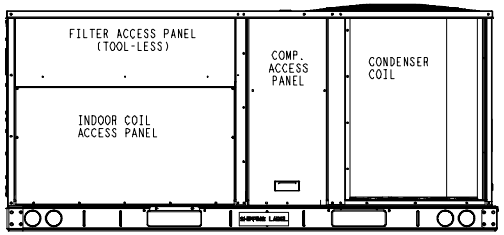

BACK

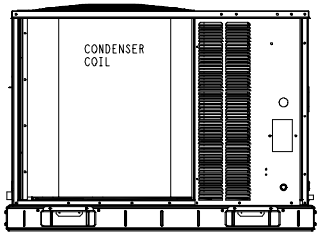

LEFT

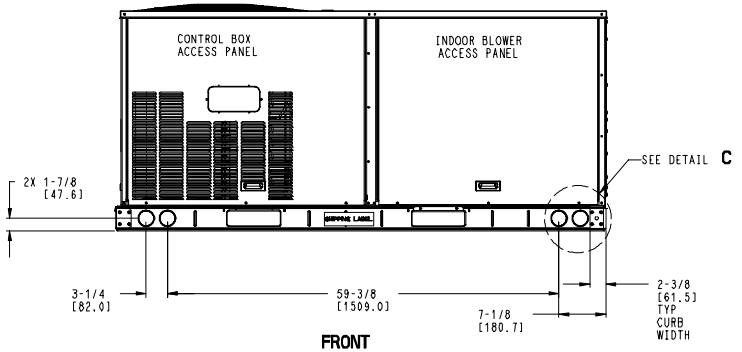

FRONT

ITC CLASSIFICATION	SHEET	DATE	SUPERCEDES			REV
U.S. ECCN:NSR	3 OF 3	9/9/24	9/15/23	50GEQ 04-06 SINGLE PACKAGE HEAT PUMP	48TC006647	A

Performance Summary For ID 1,2

Project: Climatec - City of Esc - Fire Station 6 04/12/2025
Prepared By: Shawn Harlan 08:29AM

Part Number:50GEQM05A2M5-0A0A0

Refrigerant:	**R-454B**	
ARI SEER:	**17.00**	
ARI SEER2:	**16.00**	
Application EER (Rooftop Unit only):	**12.12**	

Base Unit Dimensions

Unit Length:	**74.4**	in
Unit Width:	**46.6**	in
Unit Height:	**41.4**	in

Operating Weight

Base Unit Weight:	**594**	lb
Al/Cu - Al/Cu - Louvered Hail Guards:	**13**	lb
Total Operating Weight:	**607**	lb

Unit

Unit Voltage-Phase-Hertz:	**208-3-60**	
Air Discharge:	**Vertical**	
Fan Drive Type:	**Direct Drive**	
Actual Airflow:	**1600**	CFM
Site Altitude:	**0**	ft

Cooling Performance

Condenser Entering Air DB:	**95.0**	F
Evaporator Entering Air DB:	**80.0**	F
Evaporator Entering Air WB:	**67.0**	F
Entering Air Enthalpy:	**31.44**	BTU/lb
Evaporator Leaving Air DB:	**58.4**	F
Evaporator Leaving Air WB:	**57.1**	F
Evaporator Leaving Air Enthalpy:	**24.48**	BTU/lb
Unit Discharge Air DB:	**59.6**	F
Unit Discharge Air WB:	**57.6**	F
Unit Discharge Air Enthalpy:	**24.76**	BTU/lb
Gross Cooling Capacity:	**50.11**	MBH
Net Cooling Capacity:	**48.05**	MBH
Gross Sensible Capacity:	**37.34**	MBH
Net Sensible Capacity:	**35.28**	MBH
Compressor Power Input:	**3.18**	kW
Coil Bypass Factor:	**0.000**	

Heating Performance

Outdoor Ambient Temperature:	**47.0**	F
Entering Air Indoor Coil DB:	**70.0**	F
Leaving Air Indoor Coil DB:	**95.9**	F
Total Heating Capacity:	**44.80**	MBH
Integrated Heating Capacity:	**44.80**	MBH
Heating Power Input:	**3.60**	kW
High Temperature COP:	**3.80**	
Low Temperature COP:	**2.50**	
HSPF:	**7.2**	
High Temperature COP2:	**3.80**	
Low Temperature COP2:	**2.50**	
HSPF2:	**7.2**	

Supply Fan

External Static Pressure:	**1.00**	in wg
Fan RPM:	**1875**	
Fan Power:	**0.71**	BHP

Performance Summary For ID 1,2

Project: Climatec - City of Esc - Fire Station 6 04/12/2025
Prepared By: Shawn Harlan 08:29AM

NOTE: **Selected IFM RPM Range: 1047 - 2170**

Selection includes construction throwaway filter into the base fan curve. This filter is not MERV Rated.

Electrical Data

Voltage Range:	**187 - 253**
Compressor #1 RLA:	**15.6**
Compressor #1 LRA:	**112**
Indoor Fan Motor Type:	**MED**
Indoor Fan Motor FLA (Total):	**7.1**
Power Supply MCA:	**28**
Power Supply MOCP (Fuse or HACR):	**40**
Disconnect Size FLA:	**28**
Disconnect Size LRA:	**125**
Electrical Convenience Outlet:	**None**
Outdoor Fan [Qty / FLA (ea)]:	**1 / 1.3**

Control Panel SCCR: 5kA RMS at Rated Symmetrical Voltage

Acoustics

Sound Power Levels, db re 10E-12 Watts

	Discharge	Inlet	Outdoor
63 Hz	92.4	90.1	85.6
125 Hz	83.3	78.3	84.7
250 Hz	77.0	72.0	80.5
500 Hz	71.9	64.5	76.0
1000 Hz	68.4	66.6	72.4
2000 Hz	65.2	57.5	68.0
4000 Hz	62.5	51.6	62.8
8000 Hz	59.4	45.1	59.3
A-Weighted	75.8	71.2	79.0

Advanced Acoustics

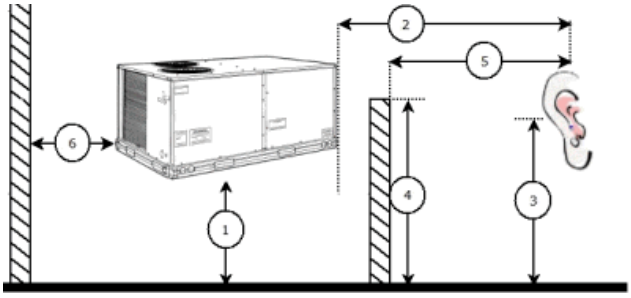

Advanced Accoustics Parameters

1. Unit height above ground:	**30.0**	ft
2. Horizontal distance from unit to receiver:	**50.0**	ft
3. Receiver height above ground:	**5.7**	ft
4. Height of obstruction:	**0.0**	ft
5. Horizontal distance from obstruction to receiver:	**0.0**	ft
6. Horizontal distance from unit to obstruction:	**0.0**	ft

Detailed Acoustics Information

Performance Summary For ID 1,2

Project: Climatec - City of Esc - Fire Station 6 04/12/2025
Prepared By: Shawn Harlan 08:29AM

Octave Band Center Freq. Hz	63	125	250	500	1k	2k	4k	8k	Overall
A	85.6	84.7	80.5	76.0	72.4	68.0	62.8	59.3	89.2 Lw
B	59.4	68.6	71.9	72.8	72.4	69.2	63.8	58.2	78.5 LwA
C	53.2	52.3	48.1	43.6	40.0	35.6	30.4	26.9	56.8 Lp
D	27.0	36.2	39.5	40.4	40.0	36.8	31.4	25.8	46.1 LpA

Legend
A Sound Power Levels at Unit's Acoustic Center, Lw
B A-Weighted Sound Power Levels at Unit's Acoustic Center, LwA
C Sound Pressure Levels at Specific Distance from Unit, Lp
D A-Weighted Sound Pressure Levels at Specific Distance from Unit, LpA

Calculation methods used in this program are patterned after the ASHRAE Guide; other ASHRAE Publications and the AHRI Acoustical Standards. While a very significant effort has been made to insure the technical accuracy of this program, it is assumed that the user is knowledgeable in the art of system sound estimation and is aware of the tolerances involved in real world acoustical estimation. This program makes certain assumptions as to the dominant sound sources and sound paths which may not always be appropriate to the real system being estimated. Because of this, no assurances can be offered that this software will always generate an accurate sound prediction from user supplied input data. If in doubt about the estimation of expected sound levels in a space, an Acoustical Engineer or a person with sound prediction expertise should be consulted.

Fan Curve

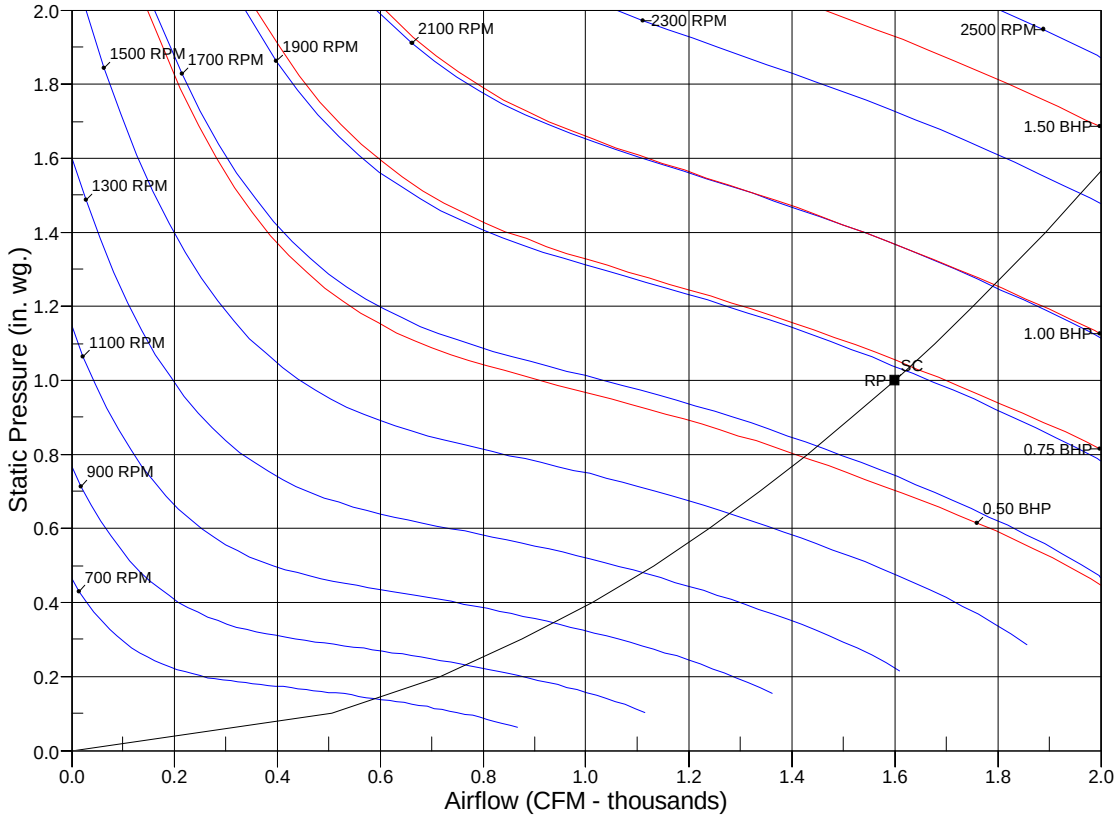

RPM = 1875 BHP = 0.71 Maximum RPM = 2660 Maximum BHP = 3.00
SC - System Curve RP - Rated Point

ID 3,5

Tag Cover Sheet
Unit Report
Certified Drawing
Performance Report

Unit Report For ID 3,5

Project: Climatec - City of Esc - Fire Station 6 04/12/2025
Prepared By: Shawn Harlan 08:29AM

Unit Parameters

Unit Model: **50GEQM04A2M5-0A0A0**
Unit Size: **04 (3 Tons)**
Volts-Phase-Hertz: **208-3-60**
Heating Type: **Heat Pump**
Refrigerant: **R-454B**
Heat Control: **Two Stage Cooling, Single Circuit**
Duct Cfg: **Vertical Supply / Vertical Return**

Dimensions (ft. in.) & Weight (lb.) ***

Unit Length: **6' 2.375"**
Unit Width: **3' 10.625"**
Unit Height: **3' 5.375"**
Total Operating Weight: **580** lb

*** Weights and Dimensions are approximate. Weight does not include unit packaging. Approximate dimensions are provided primarily for shipping purposes. For exact dimensions and weights, refer to appropriate product data catalog.

Lines and Filters

Return Air Filter Type: **Throwaway**
Return Air Filter Quantity: **2**
Return Air Filter Size: **16 x 25 x 2**

Selection includes construction throwaway filter into the base fan curve.

Unit Configuration

Standard/Medium Static - EcoBlue Vane Axial Fan
Al/Cu - Al/Cu - Louvered Hail Guards
Standard Electromechanical Controls (can be used with field installed economizers and dampers)
Standard

Warranty Information

5-Year compressor parts (STD.)
1-Year parts (STD.)

No optional warranties were selected.

NOTE: Please see Warranty Catalog 500-089 for explanation of policies and ordering methods.

Ordering Information

Part Number	Description	Quantity
50GEQM04A2M5-0A0A0	Rooftop Unit	1

Certified Drawing for ID 3,5

Project: Climatec - City of Esc - Fire Station 6
Prepared By: Shawn Harlan

04/12/2025
08:29AM

NOTES:

1. DIMENSIONS ARE IN INCHES, DIMENSIONS IN [ ] ARE IN MILLIMETERS.
2. CENTER OF GRAVITY
3. DIRECTION OF AIR FLOW
4. ALL VIEW DRAWN USING 3RD ANGLE

UNIT	J	K
50GEQ*04	33 3/8 [847]	18 5/8 [472]
50GEQ*05	41 3/8 [1051]	14 7/8 [378]
50GEQ*06	41 3/8 [1051]	14 7/8 [378]

Carrier
THIS DOCUMENT IS THE PROPERTY OF CARRIER CORPORATION AND IS DELIVERED UPON THE EXPRESS CONDITION THAT THE CONTENTS WILL NOT BE DISCLOSED OR USED WITHOUT CARRIER CORPORATION'S WRITTEN CONSENT.
SUBMISSION OF THESE DRAWINGS OR DOCUMENTS DOES NOT CONSTITUTE PART PERFORMANCE OR ACCEPTANCE OF CONTRACT.

	CONNECTION SIZES
A	1 3/8" [35] DIA FIELD POWER SUPPLY HOLE
B	2" [51] DIA POWER SUPPLY KNOCKOUT
C	1 3/4" [44] DIA GAUGE ACCESS PLUG
D	7/8" [22] DIA FIELD CONTROL WIRING HOLE
E	3/4"-14 NPT CONDENSATE DRAIN
G	2 1/2 " [64] DIA POWER SUPPLY KNOCK-OUT

THRU-THE-BASE CHART
THESE HOLES REQUIRED FOR USE CRBTMPWR008A00, 009A00

	THREADED CONDUIT SIZE	WIRE USE	REQ'D HOLE SIZES (MAX.)
W	1/2"	115V	7/8" [22.2]
X	1/2"	24V	7/8" [22.2]
Y *	3/4"	POWER	1 1/8" [28.6]
Z**	(009A00) 1/2" FPT	GAS	1 1/8" [28.6]
	FOR "THRU-THE-BASEPAN" FACTORY OPTION, FITTINGS FOR ONLY X,Y, & Z ARE PROVIDED		
*	SELECT EITHER 3/4" OR 1/2" FOR POWER, DEPENDING ON WIRE SIZE		
**	(008A00) PROVIDES 3/4" FPT THRU CURB FLANGE & FITTING.		

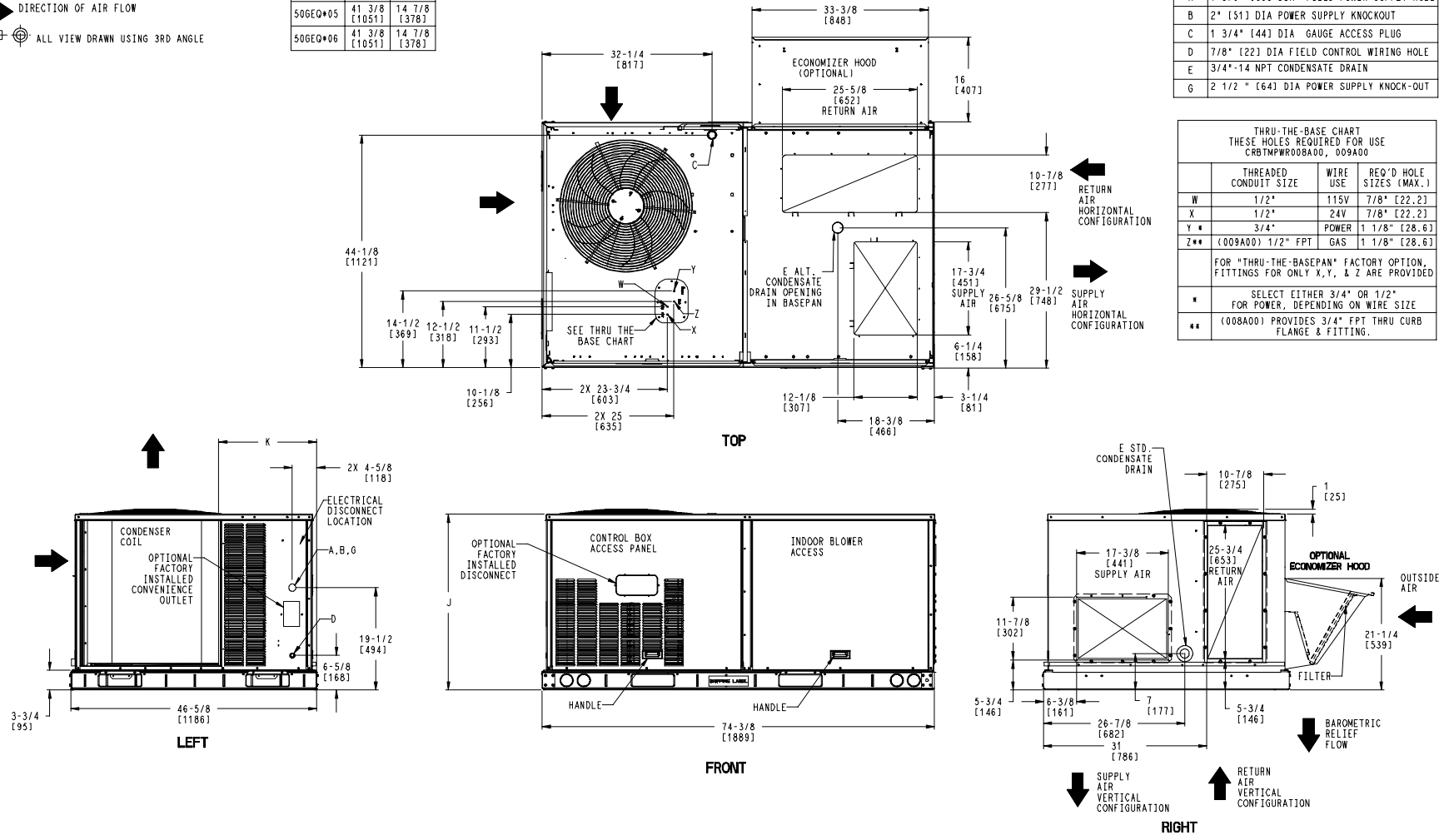

ITC CLASSIFICATION	SHEET	DATE	SUPERCEDES			REV
U.S. ECCN:NSR	1 OF 3	9/9/24	9/15/23	50GEQ 04-06 SINGLE PACKAGE HEAT PUMP	48TC006647	A

Certified Drawing for ID 3,5

Project: Climatec - City of Esc - Fire Station 6
Prepared By: Shawn Harlan

04/12/2025
08:29AM

UNIT	STD. UNIT WEIGHT *		CORNER WEIGHT (A)		CORNER WEIGHT (B)		CORNER WEIGHT (C)		CORNER WEIGHT (D)		C.G.		HEIGHT
	LBS.	KG.	LBS.	KG.	LBS.	KG.	LBS.	KG.	LBS.	KG.	X	Y	Z
50GEQ*04	475	215	128	58	120	54	110	50	117	53	36 [914]	22 3/8 [568]	16 1/8 [410]
50GEQ*05	594	269	163	74	148	67	135	61	149	68	35 3/8 [898]	22 5/16 [557]	16 1/2 [419]
50GEQ*06	596	270	163	74	148	67	135	61	149	68	35 3/8 [898]	22 5/16 [557]	16 1/2 [419]

*- STANDARD UNIT WEIGHT IS WITHOUT ELECTRIC HEAT AND WITHOUT PACKAGING.
FOR OTHER OPTIONS AND ACCESSORIES REFER TO THE PRODUCT DATA CATALOG.

Carrier
THIS DOCUMENT IS THE PROPERTY OF CARRIER CORPORATION AND IS DELIVERED UPON THE EXPRESS CONDITION THAT THE CONTENTS WILL NOT BE DISCLOSED OR USED WITHOUT CARRIER CORPORATION'S WRITTEN CONSENT.
SUBMISSION OF THESE DRAWINGS OR DOCUMENTS DOES NOT CONSTITUTE PART PERFORMANCE OR ACCEPTANCE OF CONTRACT.

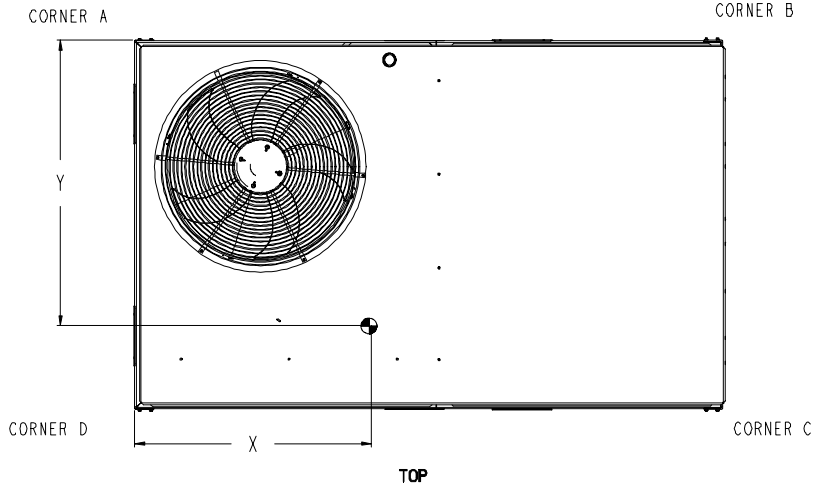

TOP

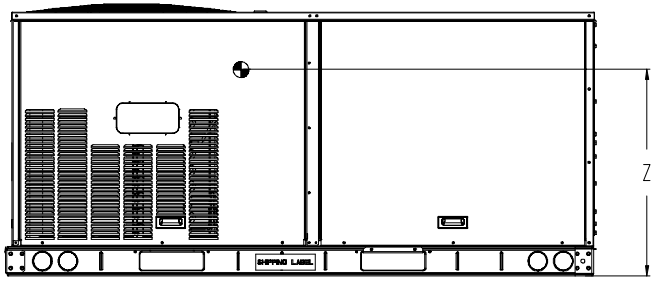

FRONT

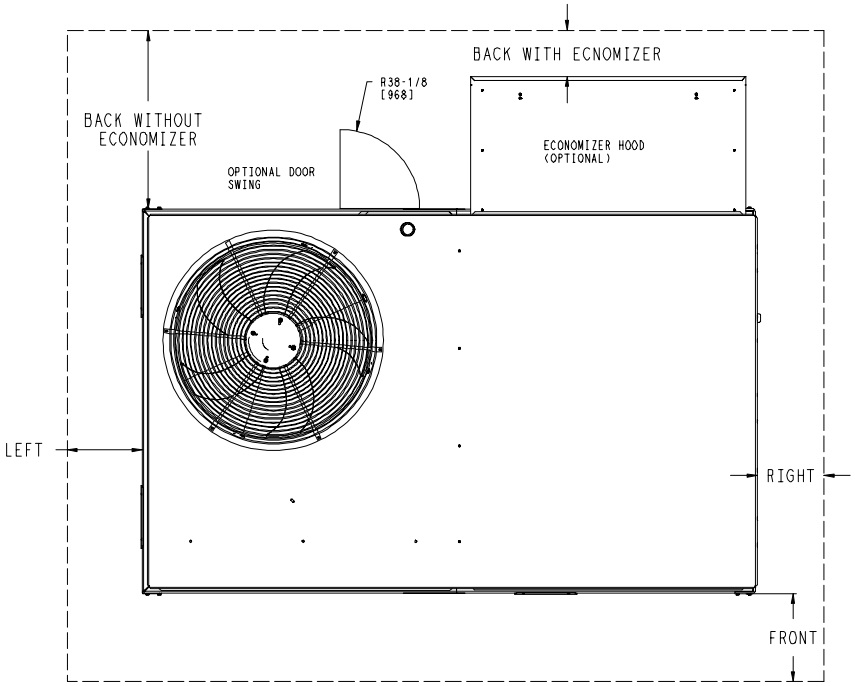

NOTE:

1. FOR ALL MINIMUM CLEARANCES LOCAL CODES OR JURISDICTIONS MAY PREVAIL.

CLEARANCE			
	SERVICE WITH:	SERVICE WITH:	OPERATING
SURFACE	CONDUCTIVE BARRIER	NONCONDUCTIVE BARRIER	CLEARANCE
FRONT	48 [1219mm]	36 [914mm]	18 [457mm]
LEFT	48 [1219mm]	42 [1067mm]	18 [457mm]
BACK W/O ECON	48 [1219mm]	42 [1067mm]	18 [457mm]
BACK W/ECON	36 [914mm]	36 [914mm]	18 [457mm]
RIGHT	36 [914mm]	36 [914mm]	18 [457mm]
TOP	72 [1829mm]	72 [1829mm]	72 [1829mm]

ITC CLASSIFICATION	SHEET	DATE	SUPERCEDES			REV
U.S. ECCN:NSR	2 OF 3	9/9/24	9/15/23	50GEQ 04-06 SINGLE PACKAGE HEAT PUMP	48TC006647	A

Carrier | THIS DOCUMENT IS THE PROPERTY OF CARRIER CORPORATION AND IS DELIVERED UPON THE EXPRESS CONDITION THAT THE CONTENTS WILL NOT BE DISCLOSED OR USED WITHOUT CARRIER CORPORATION'S WRITTEN CONSENT. | SUBMISSION OF THESE DRAWINGS OR DOCUMENTS DOES NOT CONSTITUTE PART PERFORMANCE OR ACCEPTANCE OF CONTRACT.

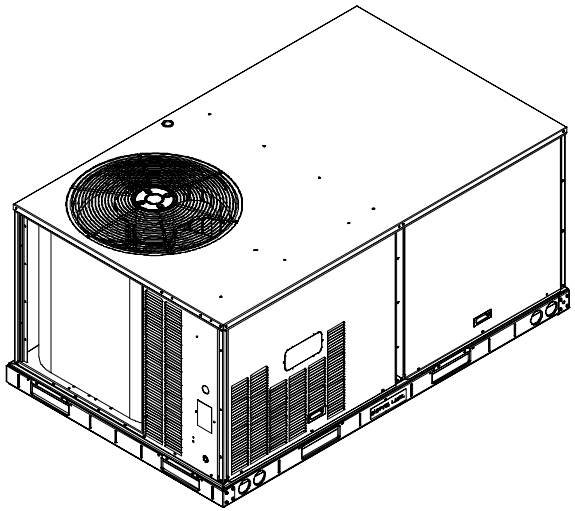

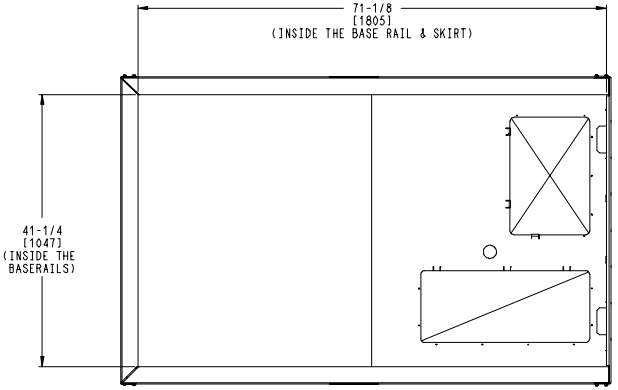

INSIDE BASERAIL DIMENSIONS
BOTTOM

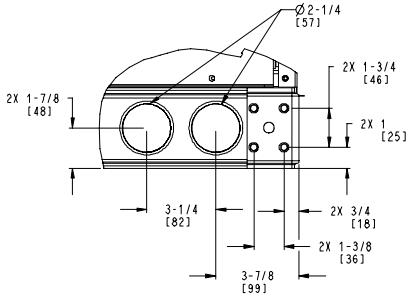

DETAIL **C**
TYP 4 PLCS

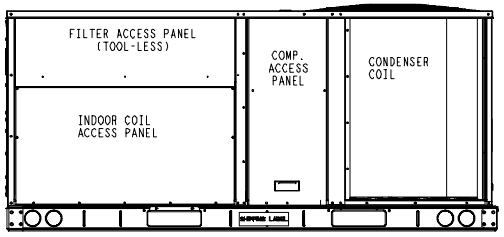

BACK

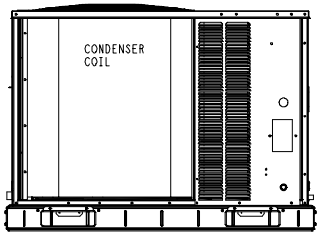

LEFT

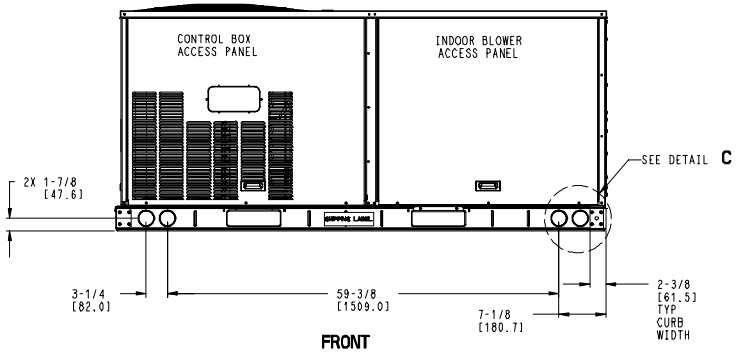

FRONT

ITC CLASSIFICATION	SHEET	DATE	SUPERCEDES			REV
U.S. ECCN:NSR	3 OF 3	9/9/24	9/15/23	50GEQ 04-06 SINGLE PACKAGE HEAT PUMP	48TC006647	A

Performance Summary For ID 3,5

Project: Climatec - City of Esc - Fire Station 6 04/12/2025
Prepared By: Shawn Harlan 08:29AM

Part Number:50GEQM04A2M5-0A0A0

Refrigerant:	**R-454B**	
ARI SEER:	**17.00**	
ARI SEER2:	**16.00**	
Application EER (Rooftop Unit only):	**11.89**	

Base Unit Dimensions

Unit Length:	**74.4**	in
Unit Width:	**46.6**	in
Unit Height:	**41.4**	in

Operating Weight

Base Unit Weight:	**567**	lb
Al/Cu - Al/Cu - Louvered Hail Guards:	**13**	lb
Total Operating Weight:	**580**	lb

Unit

Unit Voltage-Phase-Hertz:	**208-3-60**	
Air Discharge:	**Vertical**	
Fan Drive Type:	**Direct Drive**	
Actual Airflow:	**1200**	CFM
Site Altitude:	**0**	ft

Cooling Performance

Condenser Entering Air DB:	**95.0**	F
Evaporator Entering Air DB:	**80.0**	F
Evaporator Entering Air WB:	**67.0**	F
Entering Air Enthalpy:	**31.44**	BTU/lb
Evaporator Leaving Air DB:	**58.5**	F
Evaporator Leaving Air WB:	**57.2**	F
Evaporator Leaving Air Enthalpy:	**24.52**	BTU/lb
Unit Discharge Air DB:	**59.7**	F
Unit Discharge Air WB:	**57.7**	F
Unit Discharge Air Enthalpy:	**24.81**	BTU/lb
Gross Cooling Capacity:	**37.36**	MBH
Net Cooling Capacity:	**35.79**	MBH
Gross Sensible Capacity:	**27.90**	MBH
Net Sensible Capacity:	**26.33**	MBH
Compressor Power Input:	**2.37**	kW
Coil Bypass Factor:	**0.027**	

Heating Performance

Outdoor Ambient Temperature:	**47.0**	F
Entering Air Indoor Coil DB:	**70.0**	F
Leaving Air Indoor Coil DB:	**96.1**	F
Total Heating Capacity:	**33.80**	MBH
Integrated Heating Capacity:	**33.80**	MBH
Heating Power Input:	**2.60**	kW
High Temperature COP:	**3.90**	
Low Temperature COP:	**2.40**	
HSPF:	**8.0**	
High Temperature COP2:	**3.90**	
Low Temperature COP2:	**2.40**	
HSPF2:	**6.7**	

Supply Fan

External Static Pressure:	**1.00**	in wg
Fan RPM:	**1946**	
Fan Power:	**0.54**	BHP

Performance Summary For ID 3,5

Project: Climatec - City of Esc - Fire Station 6 04/12/2025
Prepared By: Shawn Harlan 08:29AM

NOTE: **Selected IFM RPM Range: 1058 - 2190**

Selection includes construction throwaway filter into the base fan curve. This filter is not MERV Rated.

Electrical Data

Voltage Range:	**187 - 253**
Compressor #1 RLA:	**11.2**
Compressor #1 LRA:	**82**
Indoor Fan Motor Type:	**MED**
Indoor Fan Motor FLA (Total):	**5.1**
Power Supply MCA:	**22**
Power Supply MOCP (Fuse or HACR):	**30**
Disconnect Size FLA:	**22**
Disconnect Size LRA:	**93**
Electrical Convenience Outlet:	**None**
Outdoor Fan [Qty / FLA (ea)]:	**1 / 2.6**

Control Panel SCCR: 5kA RMS at Rated Symmetrical Voltage

Acoustics

Sound Power Levels, db re 10E-12 Watts

	Discharge	Inlet	Outdoor
63 Hz	92.4	86.1	85.6
125 Hz	83.6	79.2	84.7
250 Hz	76.5	70.0	80.5
500 Hz	69.1	62.8	76.0
1000 Hz	66.5	64.1	72.4
2000 Hz	63.5	55.8	68.0
4000 Hz	59.4	50.0	62.8
8000 Hz	57.1	43.3	59.3
A-Weighted	74.6	69.3	79.0

Advanced Acoustics

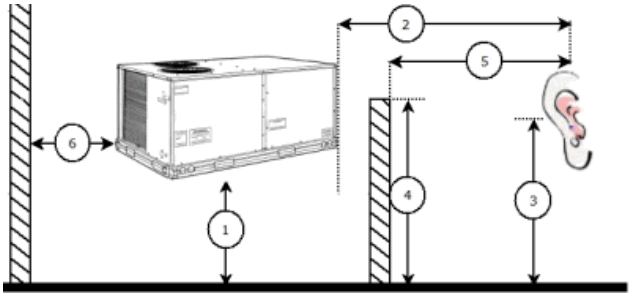

Advanced Accoustics Parameters

1. Unit height above ground:	**30.0**	ft
2. Horizontal distance from unit to receiver:	**50.0**	ft
3. Receiver height above ground:	**5.7**	ft
4. Height of obstruction:	**0.0**	ft
5. Horizontal distance from obstruction to receiver:	**0.0**	ft
6. Horizontal distance from unit to obstruction:	**0.0**	ft

Detailed Acoustics Information

Performance Summary For ID 3,5

Project: Climatec - City of Esc - Fire Station 6 04/12/2025
Prepared By: Shawn Harlan 08:29AM

Octave Band Center Freq. Hz	63	125	250	500	1k	2k	4k	8k	Overall
A	85.6	84.7	80.5	76.0	72.4	68.0	62.8	59.3	89.2 Lw
B	59.4	68.6	71.9	72.8	72.4	69.2	63.8	58.2	78.5 LwA
C	53.2	52.3	48.1	43.6	40.0	35.6	30.4	26.9	56.8 Lp
D	27.0	36.2	39.5	40.4	40.0	36.8	31.4	25.8	46.1 LpA

Legend
A Sound Power Levels at Unit's Acoustic Center, Lw
B A-Weighted Sound Power Levels at Unit's Acoustic Center, LwA
C Sound Pressure Levels at Specific Distance from Unit, Lp
D A-Weighted Sound Pressure Levels at Specific Distance from Unit, LpA

Calculation methods used in this program are patterned after the ASHRAE Guide; other ASHRAE Publications and the AHRI Acoustical Standards. While a very significant effort has been made to insure the technical accuracy of this program, it is assumed that the user is knowledgeable in the art of system sound estimation and is aware of the tolerances involved in real world acoustical estimation. This program makes certain assumptions as to the dominant sound sources and sound paths which may not always be appropriate to the real system being estimated. Because of this, no assurances can be offered that this software will always generate an accurate sound prediction from user supplied input data. If in doubt about the estimation of expected sound levels in a space, an Acoustical Engineer or a person with sound prediction expertise should be consulted.

Fan Curve

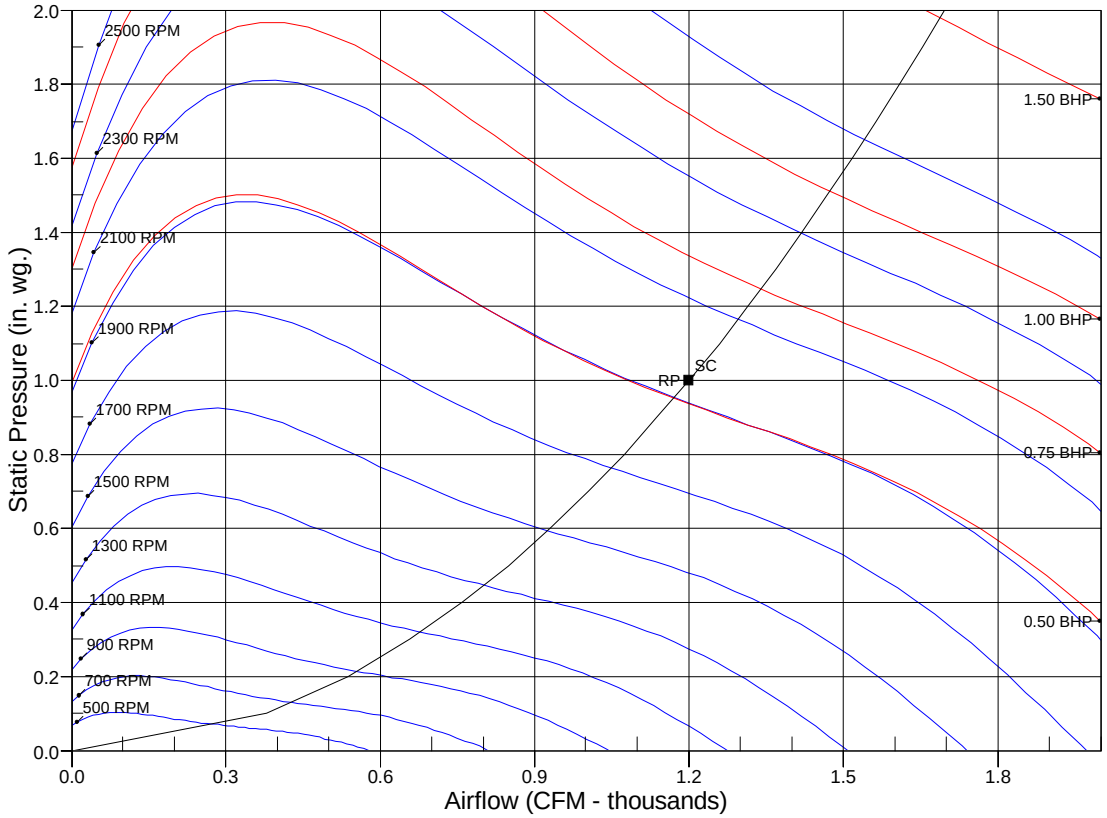

RPM = 1946 BHP = 0.54 Maximum RPM = 2490 Maximum BHP = 3.00
SC - System Curve RP - Rated Point

SUBMITTAL

Project

Climatec - City of Esc - Fire Station 7

Date

Saturday, April 12, 2025

Shawn Harlan
Sigler - Brea
205 Puente Street
Brea CA

Table Of Contents

Project: Climatec - City of Esc - Fire Station 7 04/12/2025
Prepared By: Shawn Harlan 08:35AM

ID 1,5 **3**
Unit Report 4
Certified Drawing 5
Performance Summary 8
ID 2,4 **11**
Unit Report 12
Certified Drawing 13
Performance Summary 16
ID 7 **19**
Unit Report 20
Certified Drawing 21
Performance Summary 24

ID 1,5

Tag Cover Sheet
Unit Report
Certified Drawing
Performance Report

Unit Report For ID 1,5

Project: Climatec - City of Esc - Fire Station 7 04/12/2025
Prepared By: Shawn Harlan 08:35AM

Unit Parameters

Unit Model: **50GEQM05A2M5-0A0A0**
Unit Size: **05 (4 Tons)**
Volts-Phase-Hertz: **208-3-60**
Heating Type: **Heat Pump**
Refrigerant: **R-454B**
Heat Control: **Two Stage Cooling, Single Circuit**
Duct Cfg: **Vertical Supply / Vertical Return**

Dimensions (ft. in.) & Weight (lb.) ***

Unit Length: **6' 2.375"**
Unit Width: **3' 10.625"**
Unit Height: **3' 5.375"**
Total Operating Weight: **607** lb

*** Weights and Dimensions are approximate. Weight does not include unit packaging. Approximate dimensions are provided primarily for shipping purposes. For exact dimensions and weights, refer to appropriate product data catalog.

Lines and Filters

Return Air Filter Type: **Throwaway**
Return Air Filter Quantity: **4**
Return Air Filter Size: **16 x 16 x 2**

Selection includes construction throwaway filter into the base fan curve.

Unit Configuration

Standard/Medium Static - EcoBlue Vane Axial Fan
Al/Cu - Al/Cu - Louvered Hail Guards
Standard Electromechanical Controls (can be used with field installed economizers and dampers)
Standard

Warranty Information

5-Year compressor parts (STD.)
1-Year parts (STD.)

No optional warranties were selected.

NOTE: Please see Warranty Catalog 500-089 for explanation of policies and ordering methods.

Ordering Information

Part Number	Description	Quantity
50GEQM05A2M5-0A0A0	Rooftop Unit	1

Certified Drawing for ID 1,5

Project: Climatec - City of Esc - Fire Station 7
Prepared By: Shawn Harlan

04/12/2025
08:35AM

NOTES:

1. DIMENSIONS ARE IN INCHES, DIMENSIONS IN [ ] ARE IN MILLIMETERS.
2. CENTER OF GRAVITY
3. DIRECTION OF AIR FLOW
4. ALL VIEW DRAWN USING 3RD ANGLE

UNIT	J	K
50GEQ*04	33 3/8 [847]	18 5/8 [472]
50GEQ*05	41 3/8 [1051]	14 7/8 [378]
50GEQ*06	41 3/8 [1051]	14 7/8 [378]

Carrier
THIS DOCUMENT IS THE PROPERTY OF CARRIER CORPORATION AND IS DELIVERED UPON THE EXPRESS CONDITION THAT THE CONTENTS WILL NOT BE DISCLOSED OR USED WITHOUT CARRIER CORPORATION'S WRITTEN CONSENT.
SUBMISSION OF THESE DRAWINGS OR DOCUMENTS DOES NOT CONSTITUTE PART PERFORMANCE OR ACCEPTANCE OF CONTRACT.

	CONNECTION SIZES
A	1 3/8" [35] DIA FIELD POWER SUPPLY HOLE
B	2" [51] DIA POWER SUPPLY KNOCKOUT
C	1 3/4" [44] DIA GAUGE ACCESS PLUG
D	7/8" [22] DIA FIELD CONTROL WIRING HOLE
E	3/4"-14 NPT CONDENSATE DRAIN
G	2 1/2 " [64] DIA POWER SUPPLY KNOCK-OUT

THRU-THE-BASE CHART
THESE HOLES REQUIRED FOR USE CRBTMPWR008A00, 009A00

	THREADED CONDUIT SIZE	WIRE USE	REQ'D HOLE SIZES (MAX.)
W	1/2"	115V	7/8" [22.2]
X	1/2"	24V	7/8" [22.2]
Y *	3/4"	POWER	1 1/8" [28.6]
Z**	(009A00) 1/2" FPT	GAS	1 1/8" [28.6]
	FOR "THRU-THE-BASEPAN" FACTORY OPTION, FITTINGS FOR ONLY X,Y, & Z ARE PROVIDED		
*	SELECT EITHER 3/4" OR 1/2" FOR POWER, DEPENDING ON WIRE SIZE		
**	(008A00) PROVIDES 3/4" FPT THRU CURB FLANGE & FITTING.		

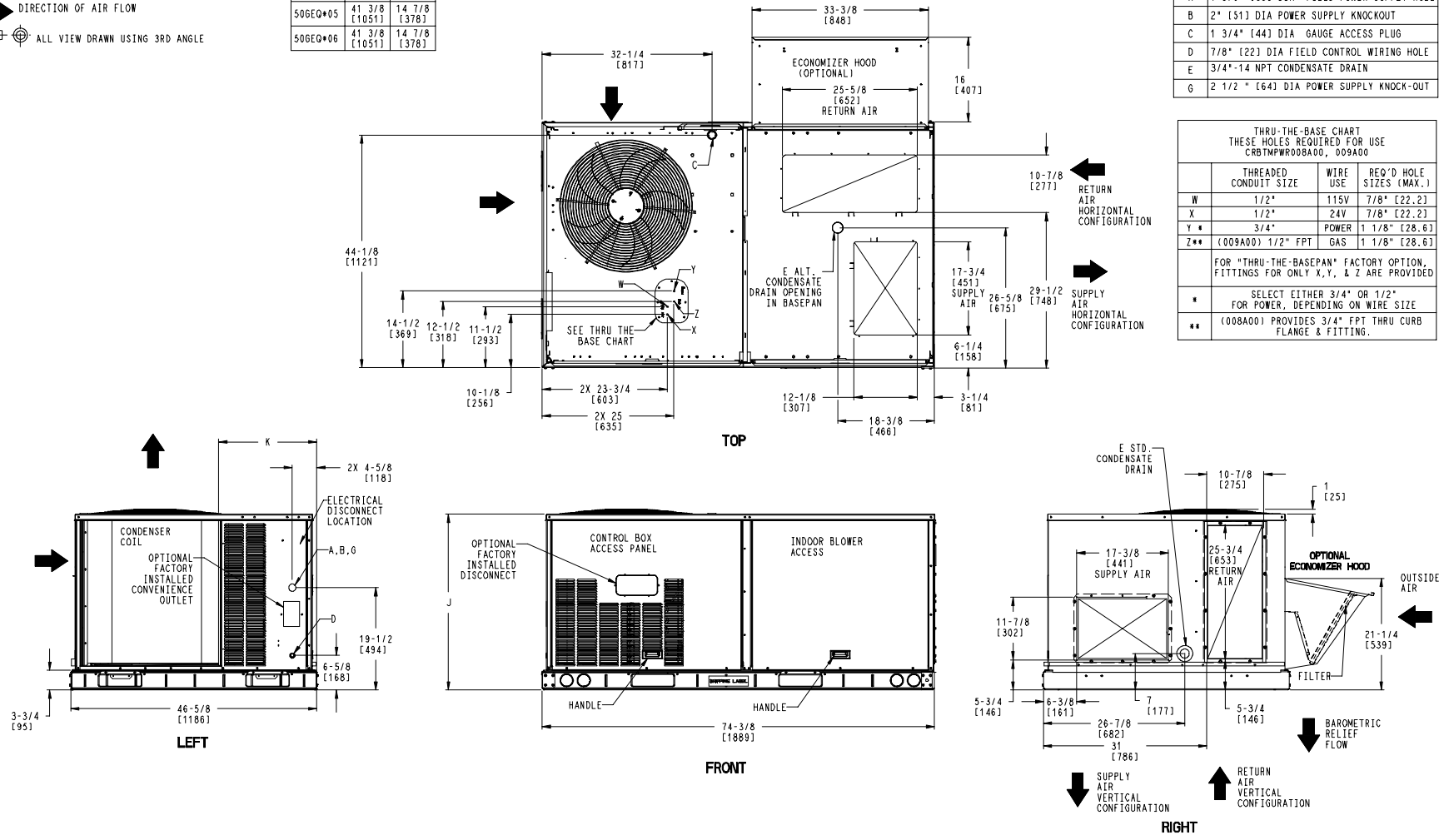

ITC CLASSIFICATION	SHEET	DATE	SUPERCEDES	50GEQ 04-06 SINGLE PACKAGE HEAT PUMP		REV
U.S. ECCN:NSR	1 OF 3	9/9/24	9/15/23		48TC006647	A

Certified Drawing for ID 1,5

Project: Climatec - City of Esc - Fire Station 7
Prepared By: Shawn Harlan

04/12/2025
08:35AM

UNIT	STD. UNIT WEIGHT *		CORNER WEIGHT (A)		CORNER WEIGHT (B)		CORNER WEIGHT (C)		CORNER WEIGHT (D)		C.G.		HEIGHT
	LBS.	KG.	LBS.	KG.	LBS.	KG.	LBS.	KG.	LBS.	KG.	X	Y	Z
50GEQ*04	475	215	128	58	120	54	110	50	117	53	36 [914]	22 3/8 [568]	16 1/8 [410]
50GEQ*05	594	269	163	74	148	67	135	61	149	68	35 3/8 [898]	22 5/16 [557]	16 1/2 [419]
50GEQ*06	596	270	163	74	148	67	135	61	149	68	35 3/8 [898]	22 5/16 [557]	16 1/2 [419]

*- STANDARD UNIT WEIGHT IS WITHOUT ELECTRIC HEAT AND WITHOUT PACKAGING.
FOR OTHER OPTIONS AND ACCESSORIES REFER TO THE PRODUCT DATA CATALOG.

Carrier
THIS DOCUMENT IS THE PROPERTY OF CARRIER CORPORATION AND IS DELIVERED UPON THE EXPRESS CONDITION THAT THE CONTENTS WILL NOT BE DISCLOSED OR USED WITHOUT CARRIER CORPORATION'S WRITTEN CONSENT.
SUBMISSION OF THESE DRAWINGS OR DOCUMENTS DOES NOT CONSTITUTE PART PERFORMANCE OR ACCEPTANCE OF CONTRACT.

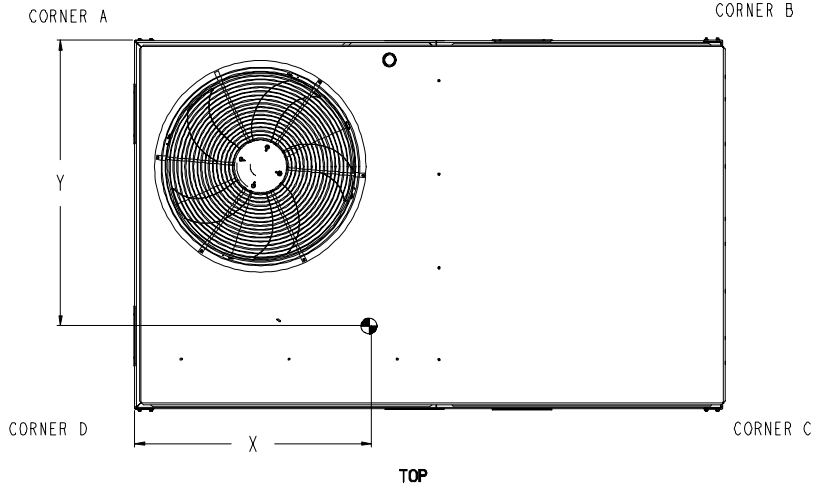

TOP

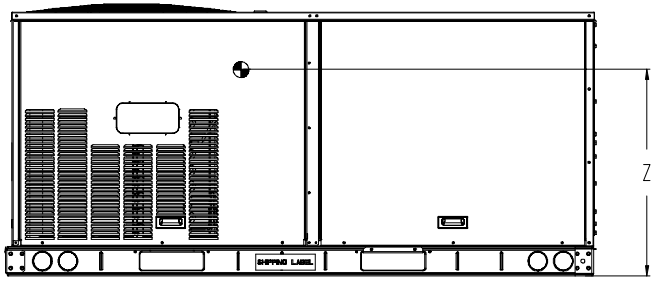

FRONT

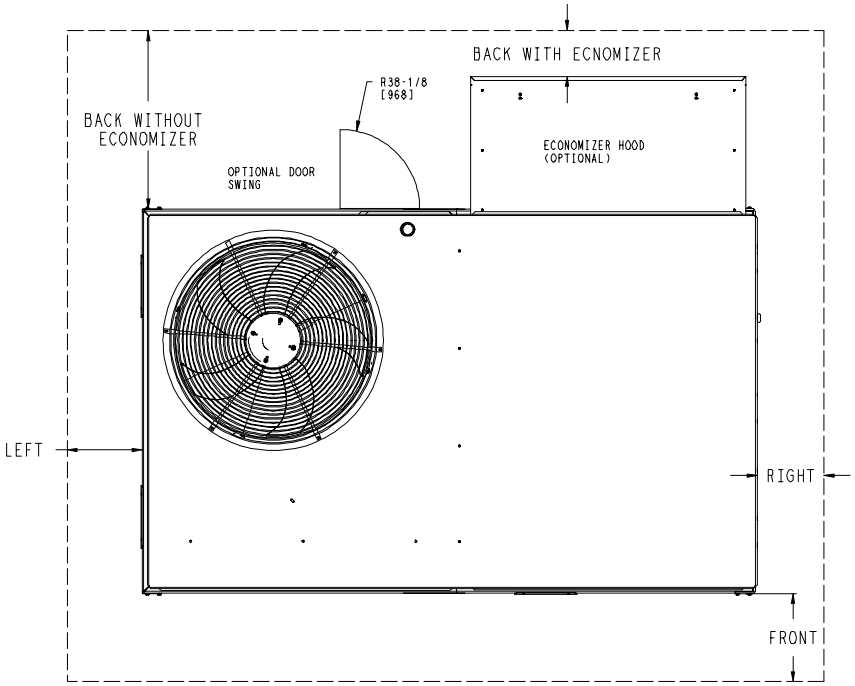

NOTE:

1. FOR ALL MINIMUM CLEARANCES LOCAL CODES OR JURISDICTIONS MAY PREVAIL.

CLEARANCE			
	SERVICE WITH:	SERVICE WITH:	OPERATING
SURFACE	CONDUCTIVE BARRIER	NONCONDUCTIVE BARRIER	CLEARANCE
FRONT	48 [1219mm]	36 [914mm]	18 [457mm]
LEFT	48 [1219mm]	42 [1067mm]	18 [457mm]
BACK W/O ECON	48 [1219mm]	42 [1067mm]	18 [457mm]
BACK W/ECON	36 [914mm]	36 [914mm]	18 [457mm]
RIGHT	36 [914mm]	36 [914mm]	18 [457mm]
TOP	72 [1829mm]	72 [1829mm]	72 [1829mm]

ITC CLASSIFICATION	SHEET	DATE	SUPERCEDES			REV
U.S. ECCN:NSR	2 OF 3	9/9/24	9/15/23	50GEQ 04-06 SINGLE PACKAGE HEAT PUMP	48TC006647	A

Certified Drawing for ID 1,5

Project: Climatec - City of Esc - Fire Station 7
Prepared By: Shawn Harlan

04/12/2025
08:35AM

Carrier | THIS DOCUMENT IS THE PROPERTY OF CARRIER CORPORATION AND IS DELIVERED UPON THE EXPRESS CONDITION THAT THE CONTENTS WILL NOT BE DISCLOSED OR USED WITHOUT CARRIER CORPORATION'S WRITTEN CONSENT. | SUBMISSION OF THESE DRAWINGS OR DOCUMENTS DOES NOT CONSTITUTE PART PERFORMANCE OR ACCEPTANCE OF CONTRACT.

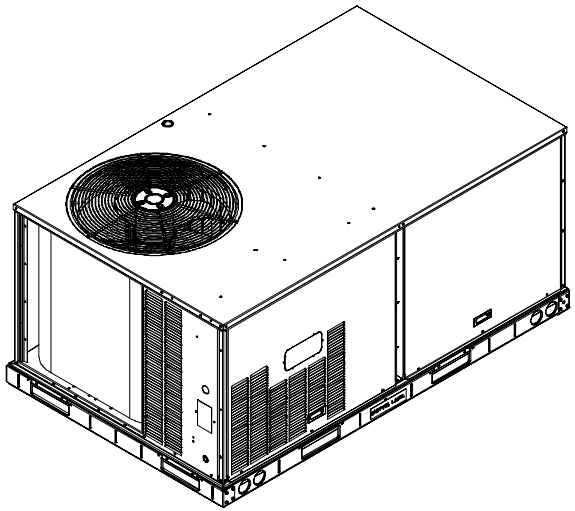

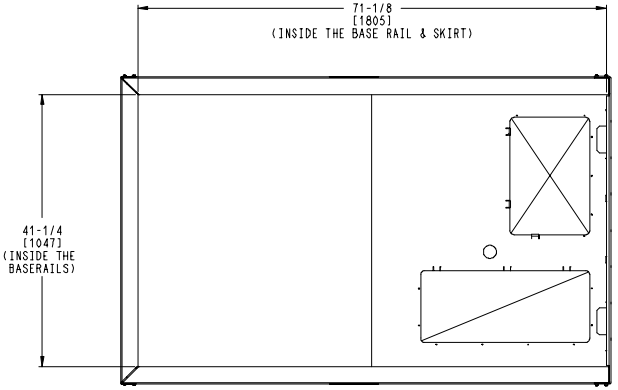

INSIDE BASERAIL DIMENSIONS
BOTTOM

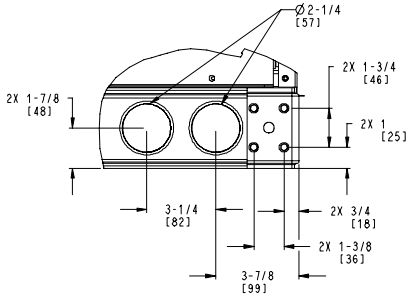

DETAIL **C**
TYP 4 PLCS

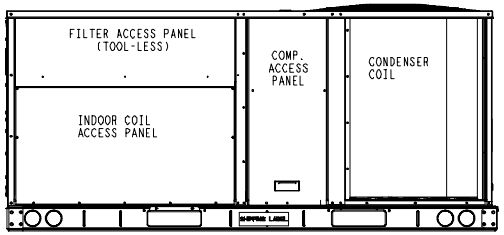

BACK

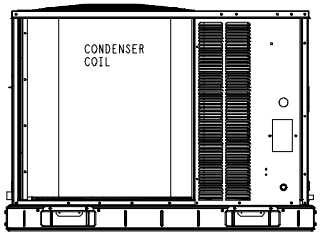

LEFT

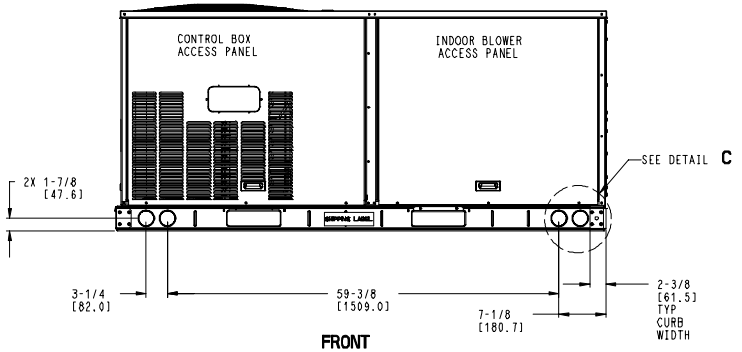

FRONT

ITC CLASSIFICATION	SHEET	DATE	SUPERCEDES			REV
U.S. ECCN:NSR	3 OF 3	9/9/24	9/15/23	50GEQ 04-06 SINGLE PACKAGE HEAT PUMP	48TC006647	A

Performance Summary For ID 1,5

Project: Climatec - City of Esc - Fire Station 7 04/12/2025
Prepared By: Shawn Harlan 08:35AM

Part Number:50GEQM05A2M5-0A0A0

Refrigerant:	**R-454B**	
ARI SEER:	**17.00**	
ARI SEER2:	**16.00**	
Application EER (Rooftop Unit only):	**12.12**	

Base Unit Dimensions

Unit Length:	**74.4**	in
Unit Width:	**46.6**	in
Unit Height:	**41.4**	in

Operating Weight

Base Unit Weight:	**594**	lb
Al/Cu - Al/Cu - Louvered Hail Guards:	**13**	lb
Total Operating Weight:	**607**	lb

Unit

Unit Voltage-Phase-Hertz:	**208-3-60**	
Air Discharge:	**Vertical**	
Fan Drive Type:	**Direct Drive**	
Actual Airflow:	**1600**	CFM
Site Altitude:	**0**	ft

Cooling Performance

Condenser Entering Air DB:	**95.0**	F
Evaporator Entering Air DB:	**80.0**	F
Evaporator Entering Air WB:	**67.0**	F
Entering Air Enthalpy:	**31.44**	BTU/lb
Evaporator Leaving Air DB:	**58.4**	F
Evaporator Leaving Air WB:	**57.1**	F
Evaporator Leaving Air Enthalpy:	**24.48**	BTU/lb
Unit Discharge Air DB:	**59.6**	F
Unit Discharge Air WB:	**57.6**	F
Unit Discharge Air Enthalpy:	**24.76**	BTU/lb
Gross Cooling Capacity:	**50.11**	MBH
Net Cooling Capacity:	**48.05**	MBH
Gross Sensible Capacity:	**37.34**	MBH
Net Sensible Capacity:	**35.28**	MBH
Compressor Power Input:	**3.18**	kW
Coil Bypass Factor:	**0.000**	

Heating Performance

Outdoor Ambient Temperature:	**47.0**	F
Entering Air Indoor Coil DB:	**70.0**	F
Leaving Air Indoor Coil DB:	**95.9**	F
Total Heating Capacity:	**44.80**	MBH
Integrated Heating Capacity:	**44.80**	MBH
Heating Power Input:	**3.60**	kW
High Temperature COP:	**3.80**	
Low Temperature COP:	**2.50**	
HSPF:	**7.2**	
High Temperature COP2:	**3.80**	
Low Temperature COP2:	**2.50**	
HSPF2:	**7.2**	

Supply Fan

External Static Pressure:	**1.00**	in wg
Fan RPM:	**1875**	
Fan Power:	**0.71**	BHP

Performance Summary For ID 1,5

Project: Climatec - City of Esc - Fire Station 7 04/12/2025
Prepared By: Shawn Harlan 08:35AM

NOTE: **Selected IFM RPM Range: 1047 - 2170**

Selection includes construction throwaway filter into the base fan curve. This filter is not MERV Rated.

Electrical Data

Voltage Range:	**187 - 253**
Compressor #1 RLA:	**15.6**
Compressor #1 LRA:	**112**
Indoor Fan Motor Type:	**MED**
Indoor Fan Motor FLA (Total):	**7.1**
Power Supply MCA:	**28**
Power Supply MOCP (Fuse or HACR):	**40**
Disconnect Size FLA:	**28**
Disconnect Size LRA:	**125**
Electrical Convenience Outlet:	**None**
Outdoor Fan [Qty / FLA (ea)]:	**1 / 1.3**

Control Panel SCCR: 5kA RMS at Rated Symmetrical Voltage

Acoustics

Sound Power Levels, db re 10E-12 Watts

	Discharge	Inlet	Outdoor
63 Hz	92.4	90.1	85.6
125 Hz	83.3	78.3	84.7
250 Hz	77.0	72.0	80.5
500 Hz	71.9	64.5	76.0
1000 Hz	68.4	66.6	72.4
2000 Hz	65.2	57.5	68.0
4000 Hz	62.5	51.6	62.8
8000 Hz	59.4	45.1	59.3
A-Weighted	75.8	71.2	79.0

Advanced Acoustics

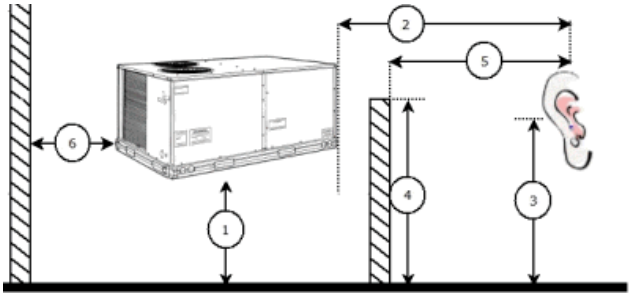

Advanced Accoustics Parameters

1. Unit height above ground:	**30.0**	ft
2. Horizontal distance from unit to receiver:	**50.0**	ft
3. Receiver height above ground:	**5.7**	ft
4. Height of obstruction:	**0.0**	ft
5. Horizontal distance from obstruction to receiver:	**0.0**	ft
6. Horizontal distance from unit to obstruction:	**0.0**	ft

Detailed Acoustics Information

Performance Summary For ID 1,5

Project: Climatec - City of Esc - Fire Station 7 04/12/2025
Prepared By: Shawn Harlan 08:35AM

Octave Band Center Freq. Hz	63	125	250	500	1k	2k	4k	8k	Overall
A	85.6	84.7	80.5	76.0	72.4	68.0	62.8	59.3	89.2 Lw
B	59.4	68.6	71.9	72.8	72.4	69.2	63.8	58.2	78.5 LwA
C	53.2	52.3	48.1	43.6	40.0	35.6	30.4	26.9	56.8 Lp
D	27.0	36.2	39.5	40.4	40.0	36.8	31.4	25.8	46.1 LpA

Legend
A Sound Power Levels at Unit's Acoustic Center, Lw
B A-Weighted Sound Power Levels at Unit's Acoustic Center, LwA
C Sound Pressure Levels at Specific Distance from Unit, Lp
D A-Weighted Sound Pressure Levels at Specific Distance from Unit, LpA

Calculation methods used in this program are patterned after the ASHRAE Guide; other ASHRAE Publications and the AHRI Acoustical Standards. While a very significant effort has been made to insure the technical accuracy of this program, it is assumed that the user is knowledgeable in the art of system sound estimation and is aware of the tolerances involved in real world acoustical estimation. This program makes certain assumptions as to the dominant sound sources and sound paths which may not always be appropriate to the real system being estimated. Because of this, no assurances can be offered that this software will always generate an accurate sound prediction from user supplied input data. If in doubt about the estimation of expected sound levels in a space, an Acoustical Engineer or a person with sound prediction expertise should be consulted.

Fan Curve

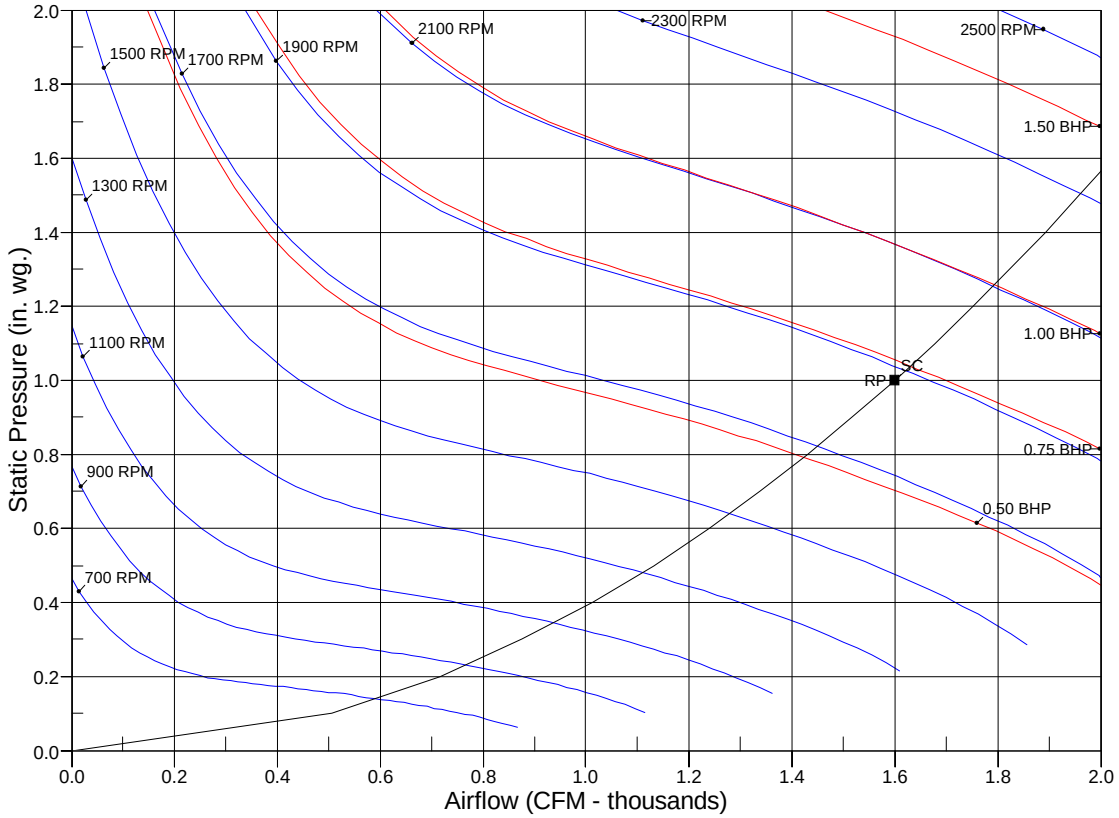

RPM = 1875 BHP = 0.71 Maximum RPM = 2660 Maximum BHP = 3.00
SC - System Curve RP - Rated Point

ID 2,4

Tag Cover Sheet
Unit Report
Certified Drawing
Performance Report

Unit Report For ID 2,4

Project: Climatec - City of Esc - Fire Station 7 04/12/2025
Prepared By: Shawn Harlan 08:35AM

Unit Parameters

Unit Model: **50GEQM04A2M5-0A0A0**
Unit Size: **04 (3 Tons)**
Volts-Phase-Hertz: **208-3-60**
Heating Type: **Heat Pump**
Refrigerant: **R-454B**
Heat Control: **Two Stage Cooling, Single Circuit**
Duct Cfg: **Vertical Supply / Vertical Return**

Dimensions (ft. in.) & Weight (lb.) ***

Unit Length: **6' 2.375"**
Unit Width: **3' 10.625"**
Unit Height: **3' 5.375"**
Total Operating Weight: **580** lb

*** Weights and Dimensions are approximate. Weight does not include unit packaging. Approximate dimensions are provided primarily for shipping purposes. For exact dimensions and weights, refer to appropriate product data catalog.

Lines and Filters

Return Air Filter Type: **Throwaway**
Return Air Filter Quantity: **2**
Return Air Filter Size: **16 x 25 x 2**

Selection includes construction throwaway filter into the base fan curve.

Unit Configuration

Standard/Medium Static - EcoBlue Vane Axial Fan
Al/Cu - Al/Cu - Louvered Hail Guards
Standard Electromechanical Controls (can be used with field installed economizers and dampers)
Standard

Warranty Information

5-Year compressor parts (STD.)
1-Year parts (STD.)

No optional warranties were selected.

NOTE: Please see Warranty Catalog 500-089 for explanation of policies and ordering methods.

Ordering Information

Part Number	Description	Quantity
50GEQM04A2M5-0A0A0	Rooftop Unit	1

Certified Drawing for ID 2,4

Project: Climatec - City of Esc - Fire Station 7
Prepared By: Shawn Harlan

04/12/2025
08:35AM

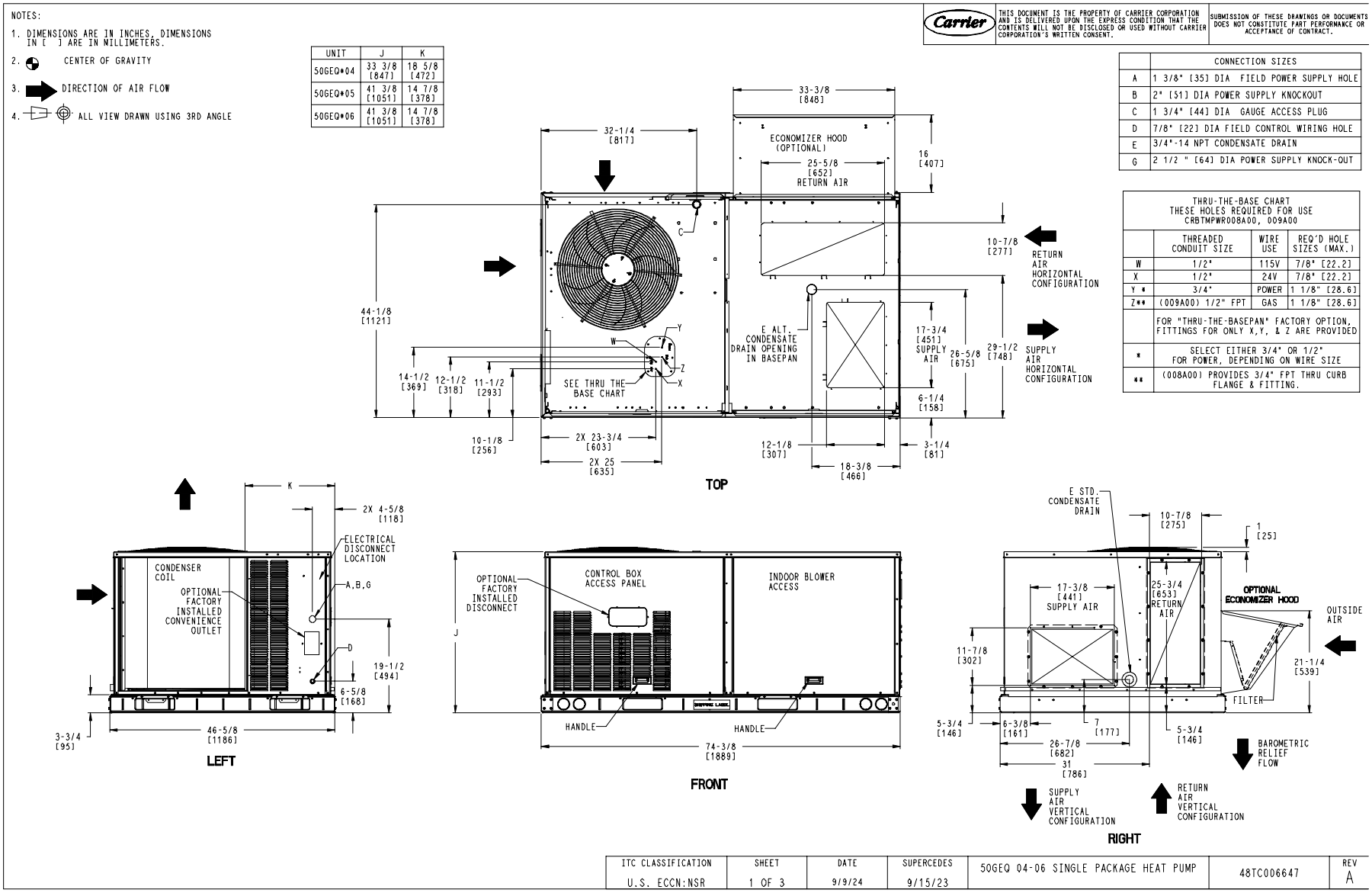

Certified Drawing for ID 2,4

Project: Climatec - City of Esc - Fire Station 7
Prepared By: Shawn Harlan

04/12/2025
08:35AM

UNIT	STD. UNIT WEIGHT *		CORNER WEIGHT (A)		CORNER WEIGHT (B)		CORNER WEIGHT (C)		CORNER WEIGHT (D)		C.G.		HEIGHT
	LBS.	KG.	LBS.	KG.	LBS.	KG.	LBS.	KG.	LBS.	KG.	X	Y	Z
50GEQ*04	475	215	128	58	120	54	110	50	117	53	36 [914]	22 3/8 [568]	16 1/8 [410]
50GEQ*05	594	269	163	74	148	67	135	61	149	68	35 3/8 [898]	22 5/16 [557]	16 1/2 [419]
50GEQ*06	596	270	163	74	148	67	135	61	149	68	35 3/8 [898]	22 5/16 [557]	16 1/2 [419]

*- STANDARD UNIT WEIGHT IS WITHOUT ELECTRIC HEAT AND WITHOUT PACKAGING.
FOR OTHER OPTIONS AND ACCESSORIES REFER TO THE PRODUCT DATA CATALOG.

Carrier
THIS DOCUMENT IS THE PROPERTY OF CARRIER CORPORATION AND IS DELIVERED UPON THE EXPRESS CONDITION THAT THE CONTENTS WILL NOT BE DISCLOSED OR USED WITHOUT CARRIER CORPORATION'S WRITTEN CONSENT.
SUBMISSION OF THESE DRAWINGS OR DOCUMENTS DOES NOT CONSTITUTE PART PERFORMANCE OR ACCEPTANCE OF CONTRACT.

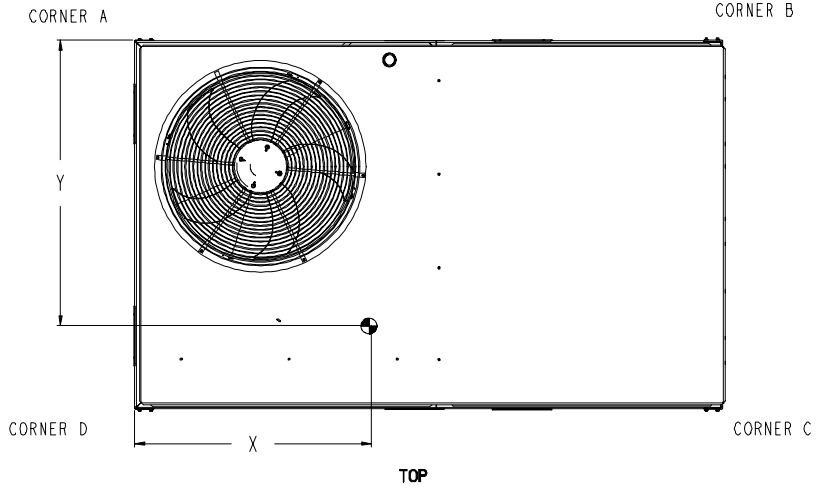

TOP

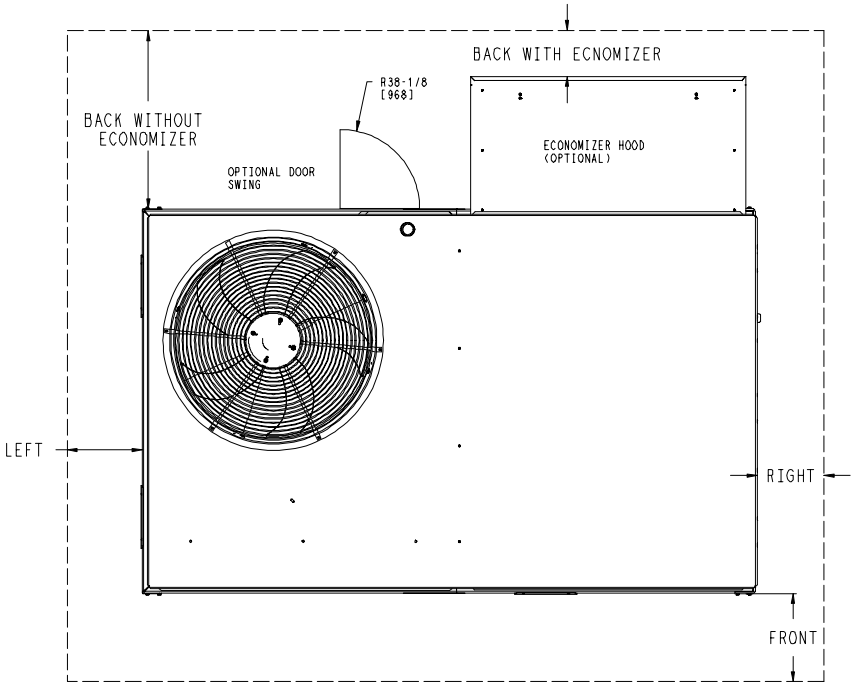

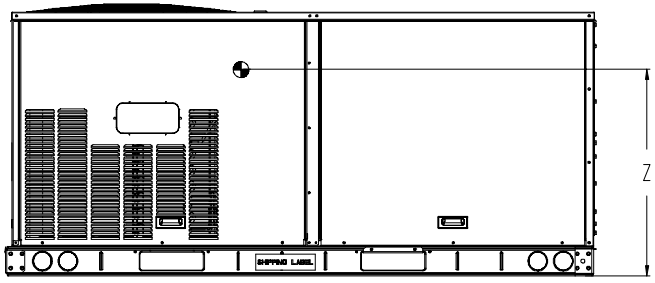

FRONT

NOTE:

1. FOR ALL MINIMUM CLEARANCES LOCAL CODES OR JURISDICTIONS MAY PREVAIL.

	CLEARANCE		
	SERVICE WITH:	SERVICE WITH:	OPERATING
SURFACE	CONDUCTIVE BARRIER	NONCONDUCTIVE BARRIER	CLEARANCE
FRONT	48 [1219mm]	36 [914mm]	18 [457mm]
LEFT	48 [1219mm]	42 [1067mm]	18 [457mm]
BACK W/O ECON	48 [1219mm]	42 [1067mm]	18 [457mm]
BACK W/ECON	36 [914mm]	36 [914mm]	18 [457mm]
RIGHT	36 [914mm]	36 [914mm]	18 [457mm]
TOP	72 [1829mm]	72 [1829mm]	72 [1829mm]

ITC CLASSIFICATION	SHEET	DATE	SUPERCEDES			REV
U.S. ECCN:NSR	2 OF 3	9/9/24	9/15/23	50GEQ 04-06 SINGLE PACKAGE HEAT PUMP	48TC006647	A

Carrier | THIS DOCUMENT IS THE PROPERTY OF CARRIER CORPORATION AND IS DELIVERED UPON THE EXPRESS CONDITION THAT THE CONTENTS WILL NOT BE DISCLOSED OR USED WITHOUT CARRIER CORPORATION'S WRITTEN CONSENT. | SUBMISSION OF THESE DRAWINGS OR DOCUMENTS DOES NOT CONSTITUTE PART PERFORMANCE OR ACCEPTANCE OF CONTRACT.

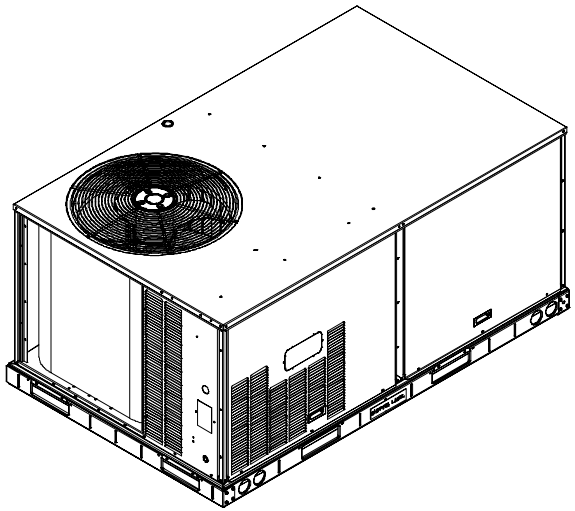

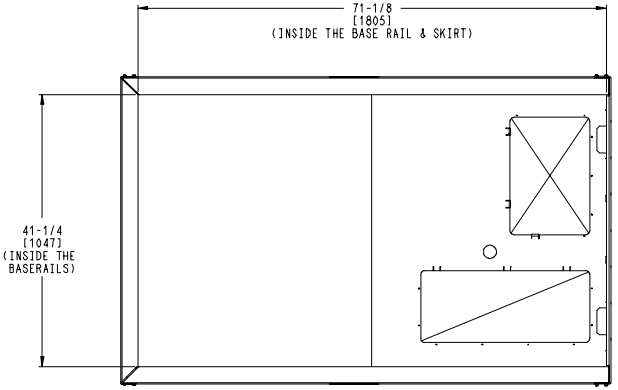

INSIDE BASERAIL DIMENSIONS
BOTTOM

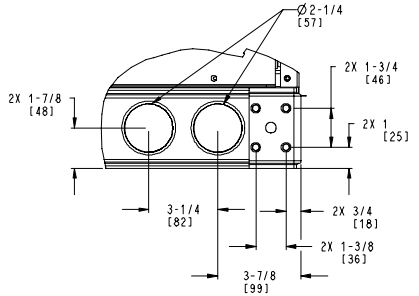

DETAIL **C**
TYP 4 PLCS

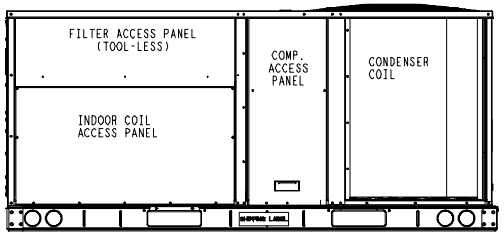

BACK

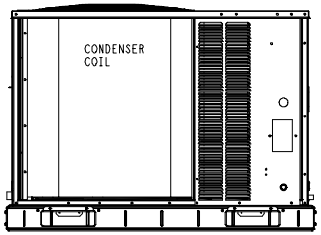

LEFT

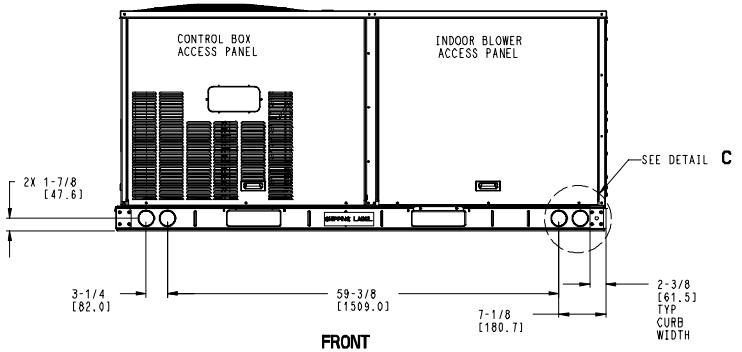

FRONT

ITC CLASSIFICATION	SHEET	DATE	SUPERCEDES			REV
U.S. ECCN:NSR	3 OF 3	9/9/24	9/15/23	50GEQ 04-06 SINGLE PACKAGE HEAT PUMP	48TC006647	A

Performance Summary For ID 2,4

Project: Climatec - City of Esc - Fire Station 7 04/12/2025
Prepared By: Shawn Harlan 08:35AM

Part Number:50GEQM04A2M5-0A0A0

Refrigerant:	**R-454B**	
ARI SEER:	**17.00**	
ARI SEER2:	**16.00**	
Application EER (Rooftop Unit only):	**11.89**	

Base Unit Dimensions

Unit Length:	**74.4**	in
Unit Width:	**46.6**	in
Unit Height:	**41.4**	in

Operating Weight

Base Unit Weight:	**567**	lb
Al/Cu - Al/Cu - Louvered Hail Guards:	**13**	lb
Total Operating Weight:	**580**	lb

Unit

Unit Voltage-Phase-Hertz:	**208-3-60**	
Air Discharge:	**Vertical**	
Fan Drive Type:	**Direct Drive**	
Actual Airflow:	**1200**	CFM
Site Altitude:	**0**	ft

Cooling Performance

Condenser Entering Air DB:	**95.0**	F
Evaporator Entering Air DB:	**80.0**	F
Evaporator Entering Air WB:	**67.0**	F
Entering Air Enthalpy:	**31.44**	BTU/lb
Evaporator Leaving Air DB:	**58.5**	F
Evaporator Leaving Air WB:	**57.2**	F
Evaporator Leaving Air Enthalpy:	**24.52**	BTU/lb
Unit Discharge Air DB:	**59.7**	F
Unit Discharge Air WB:	**57.7**	F
Unit Discharge Air Enthalpy:	**24.81**	BTU/lb
Gross Cooling Capacity:	**37.36**	MBH
Net Cooling Capacity:	**35.79**	MBH
Gross Sensible Capacity:	**27.90**	MBH
Net Sensible Capacity:	**26.33**	MBH
Compressor Power Input:	**2.37**	kW
Coil Bypass Factor:	**0.027**	

Heating Performance

Outdoor Ambient Temperature:	**47.0**	F
Entering Air Indoor Coil DB:	**70.0**	F
Leaving Air Indoor Coil DB:	**96.1**	F
Total Heating Capacity:	**33.80**	MBH
Integrated Heating Capacity:	**33.80**	MBH
Heating Power Input:	**2.60**	kW
High Temperature COP:	**3.90**	
Low Temperature COP:	**2.40**	
HSPF:	**8.0**	
High Temperature COP2:	**3.90**	
Low Temperature COP2:	**2.40**	
HSPF2:	**6.7**	

Supply Fan

External Static Pressure:	**1.00**	in wg
Fan RPM:	**1946**	
Fan Power:	**0.54**	BHP

Performance Summary For ID 2,4

Project: Climatec - City of Esc - Fire Station 7 04/12/2025
Prepared By: Shawn Harlan 08:35AM

NOTE: **Selected IFM RPM Range: 1058 - 2190**

Selection includes construction throwaway filter into the base fan curve. This filter is not MERV Rated.

Electrical Data

Voltage Range:	**187 - 253**
Compressor #1 RLA:	**11.2**
Compressor #1 LRA:	**82**
Indoor Fan Motor Type:	**MED**
Indoor Fan Motor FLA (Total):	**5.1**
Power Supply MCA:	**22**
Power Supply MOCP (Fuse or HACR):	**30**
Disconnect Size FLA:	**22**
Disconnect Size LRA:	**93**
Electrical Convenience Outlet:	**None**
Outdoor Fan [Qty / FLA (ea)]:	**1 / 2.6**

Control Panel SCCR: 5kA RMS at Rated Symmetrical Voltage

Acoustics

Sound Power Levels, db re 10E-12 Watts

	Discharge	Inlet	Outdoor
63 Hz	92.4	86.1	85.6
125 Hz	83.6	79.2	84.7
250 Hz	76.5	70.0	80.5
500 Hz	69.1	62.8	76.0
1000 Hz	66.5	64.1	72.4
2000 Hz	63.5	55.8	68.0
4000 Hz	59.4	50.0	62.8
8000 Hz	57.1	43.3	59.3
A-Weighted	74.6	69.3	79.0

Advanced Acoustics

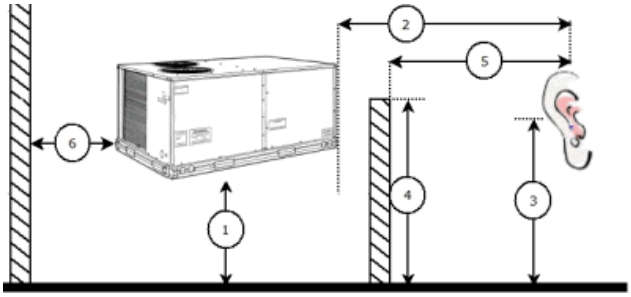

Advanced Accoustics Parameters

1. Unit height above ground: **30.0** ft
2. Horizontal distance from unit to receiver: **50.0** ft
3. Receiver height above ground: **5.7** ft
4. Height of obstruction: **0.0** ft
5. Horizontal distance from obstruction to receiver: **0.0** ft
6. Horizontal distance from unit to obstruction: **0.0** ft

Detailed Acoustics Information

Performance Summary For ID 2,4

Project: Climatec - City of Esc - Fire Station 7 04/12/2025
Prepared By: Shawn Harlan 08:35AM

Octave Band Center Freq. Hz	63	125	250	500	1k	2k	4k	8k	Overall
A	85.6	84.7	80.5	76.0	72.4	68.0	62.8	59.3	89.2 Lw
B	59.4	68.6	71.9	72.8	72.4	69.2	63.8	58.2	78.5 LwA
C	53.2	52.3	48.1	43.6	40.0	35.6	30.4	26.9	56.8 Lp
D	27.0	36.2	39.5	40.4	40.0	36.8	31.4	25.8	46.1 LpA

Legend
A Sound Power Levels at Unit's Acoustic Center, Lw
B A-Weighted Sound Power Levels at Unit's Acoustic Center, LwA
C Sound Pressure Levels at Specific Distance from Unit, Lp
D A-Weighted Sound Pressure Levels at Specific Distance from Unit, LpA

Calculation methods used in this program are patterned after the ASHRAE Guide; other ASHRAE Publications and the AHRI Acoustical Standards. While a very significant effort has been made to insure the technical accuracy of this program, it is assumed that the user is knowledgeable in the art of system sound estimation and is aware of the tolerances involved in real world acoustical estimation. This program makes certain assumptions as to the dominant sound sources and sound paths which may not always be appropriate to the real system being estimated. Because of this, no assurances can be offered that this software will always generate an accurate sound prediction from user supplied input data. If in doubt about the estimation of expected sound levels in a space, an Acoustical Engineer or a person with sound prediction expertise should be consulted.

Fan Curve

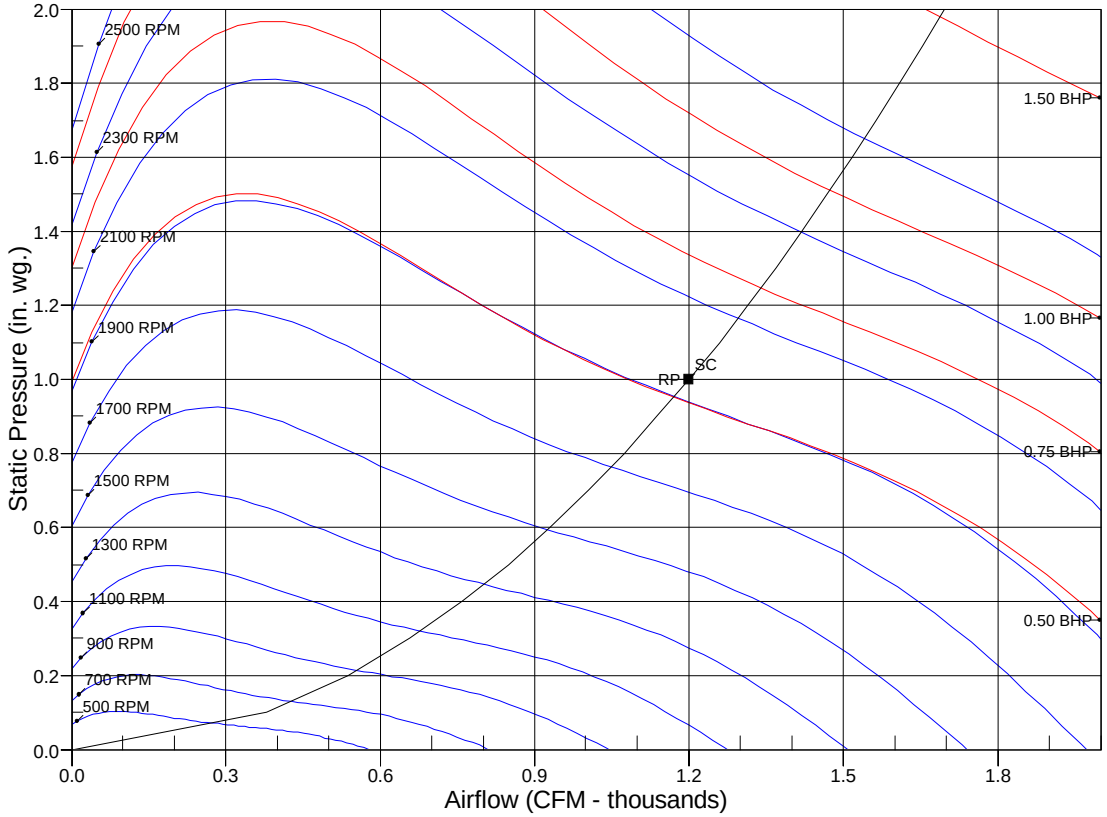

RPM = 1946 BHP = 0.54 Maximum RPM = 2490 Maximum BHP = 3.00
SC - System Curve RP - Rated Point

ID 7

Tag Cover Sheet
Unit Report
Certified Drawing
Performance Report

Unit Report For ID 7

Project: Climatec - City of Esc - Fire Station 7 04/12/2025
Prepared By: Shawn Harlan 08:35AM

Unit Parameters

Unit Model: **50GEQM06A2M5-0A0A0**
Unit Size: **06 (5 Tons)**
Volts-Phase-Hertz: **208-3-60**
Heating Type: **Heat Pump**
Refrigerant: **R-454B**
Heat Control: **Two Stage Cooling, Single Circuit**
Duct Cfg: **Vertical Supply / Vertical Return**

Dimensions (ft. in.) & Weight (lb.) ***

Unit Length: **6' 2.375"**
Unit Width: **3' 10.625"**
Unit Height: **3' 5.375"**
Total Operating Weight: 613 lb

*** Weights and Dimensions are approximate. Weight does not include unit packaging. Approximate dimensions are provided primarily for shipping purposes. For exact dimensions and weights, refer to appropriate product data catalog.

Lines and Filters

Return Air Filter Type: **Throwaway**
Return Air Filter Quantity: **4**
Return Air Filter Size: **16 x 16 x 2**

Selection includes construction throwaway filter into the base fan curve.

Unit Configuration

Standard/Medium Static - EcoBlue Vane Axial Fan
Al/Cu - Al/Cu - Louvered Hail Guards
Standard Electromechanical Controls (can be used with field installed economizers and dampers)
Standard

Warranty Information

5-Year compressor parts (STD.)
1-Year parts (STD.)

No optional warranties were selected.

NOTE: Please see Warranty Catalog 500-089 for explanation of policies and ordering methods.

Ordering Information

Part Number	Description	Quantity
50GEQM06A2M5-0A0A0	Rooftop Unit	1

Certified Drawing for ID 7

Project: Climatec - City of Esc - Fire Station 7
Prepared By: Shawn Harlan

04/12/2025
08:35AM

NOTES:

1. DIMENSIONS ARE IN INCHES, DIMENSIONS IN [ ] ARE IN MILLIMETERS.
2. CENTER OF GRAVITY
3. DIRECTION OF AIR FLOW
4. ALL VIEW DRAWN USING 3RD ANGLE

UNIT	J	K
50GEQ*04	33 3/8 [847]	18 5/8 [472]
50GEQ*05	41 3/8 [1051]	14 7/8 [378]
50GEQ*06	41 3/8 [1051]	14 7/8 [378]

Carrier
THIS DOCUMENT IS THE PROPERTY OF CARRIER CORPORATION AND IS DELIVERED UPON THE EXPRESS CONDITION THAT THE CONTENTS WILL NOT BE DISCLOSED OR USED WITHOUT CARRIER CORPORATION'S WRITTEN CONSENT.
SUBMISSION OF THESE DRAWINGS OR DOCUMENTS DOES NOT CONSTITUTE PART PERFORMANCE OR ACCEPTANCE OF CONTRACT.

	CONNECTION SIZES
A	1 3/8" [35] DIA FIELD POWER SUPPLY HOLE
B	2" [51] DIA POWER SUPPLY KNOCKOUT
C	1 3/4" [44] DIA GAUGE ACCESS PLUG
D	7/8" [22] DIA FIELD CONTROL WIRING HOLE
E	3/4"-14 NPT CONDENSATE DRAIN
G	2 1/2 " [64] DIA POWER SUPPLY KNOCK-OUT

THRU-THE-BASE CHART
THESE HOLES REQUIRED FOR USE CRBTMPWR008A00, 009A00

	THREADED CONDUIT SIZE	WIRE USE	REQ'D HOLE SIZES (MAX.)
W	1/2"	115V	7/8" [22.2]
X	1/2"	24V	7/8" [22.2]
Y *	3/4"	POWER	1 1/8" [28.6]
Z**	(009A00) 1/2" FPT	GAS	1 1/8" [28.6]
	FOR "THRU-THE-BASEPAN" FACTORY OPTION, FITTINGS FOR ONLY X,Y, & Z ARE PROVIDED		
*	SELECT EITHER 3/4" OR 1/2" FOR POWER, DEPENDING ON WIRE SIZE		
**	(008A00) PROVIDES 3/4" FPT THRU CURB FLANGE & FITTING.		

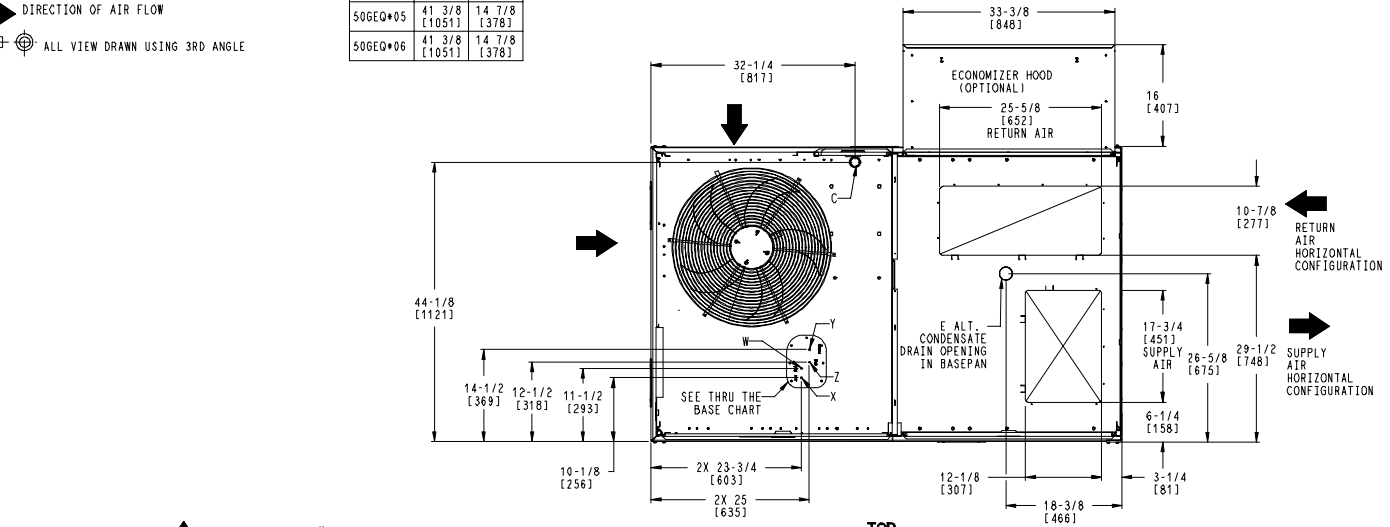

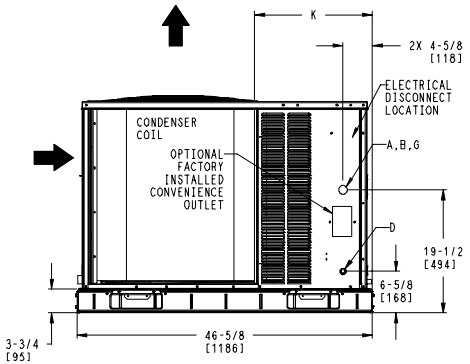

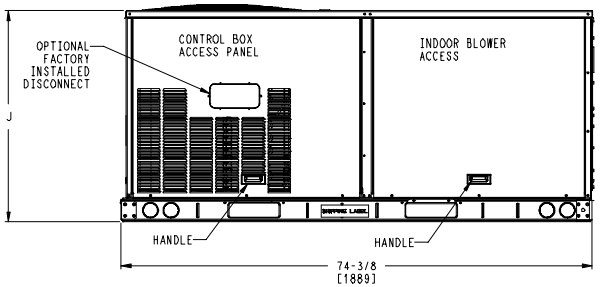

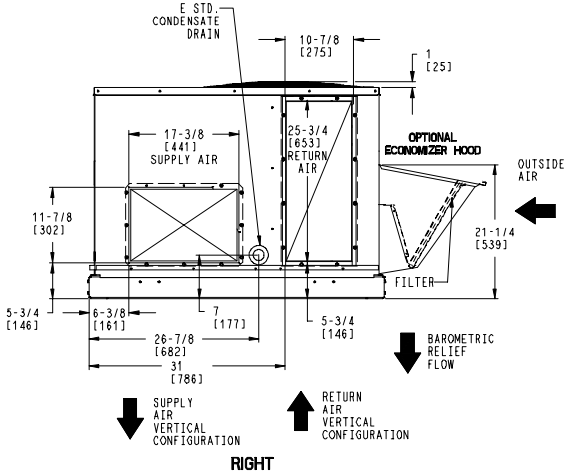

ITC CLASSIFICATION	SHEET	DATE	SUPERCEDES			REV
U.S. ECCN:NSR	1 OF 3	9/9/24	9/15/23	50GEQ 04-06 SINGLE PACKAGE HEAT PUMP	48TC006647	A

Certified Drawing for ID 7

Project: Climatec - City of Esc - Fire Station 7
Prepared By: Shawn Harlan

04/12/2025
08:35AM

UNIT	STD. UNIT WEIGHT *		CORNER WEIGHT (A)		CORNER WEIGHT (B)		CORNER WEIGHT (C)		CORNER WEIGHT (D)		C.G.		HEIGHT
	LBS.	KG.	LBS.	KG.	LBS.	KG.	LBS.	KG.	LBS.	KG.	X	Y	Z
50GEQ*04	475	215	128	58	120	54	110	50	117	53	36 [914]	22 3/8 [568]	16 1/8 [410]
50GEQ*05	594	269	163	74	148	67	135	61	149	68	35 3/8 [898]	22 5/16 [557]	16 1/2 [419]
50GEQ*06	596	270	163	74	148	67	135	61	149	68	35 3/8 [898]	22 5/16 [557]	16 1/2 [419]

*- STANDARD UNIT WEIGHT IS WITHOUT ELECTRIC HEAT AND WITHOUT PACKAGING.
FOR OTHER OPTIONS AND ACCESSORIES REFER TO THE PRODUCT DATA CATALOG.

Carrier
THIS DOCUMENT IS THE PROPERTY OF CARRIER CORPORATION AND IS DELIVERED UPON THE EXPRESS CONDITION THAT THE CONTENTS WILL NOT BE DISCLOSED OR USED WITHOUT CARRIER CORPORATION'S WRITTEN CONSENT.
SUBMISSION OF THESE DRAWINGS OR DOCUMENTS DOES NOT CONSTITUTE PART PERFORMANCE OR ACCEPTANCE OF CONTRACT.

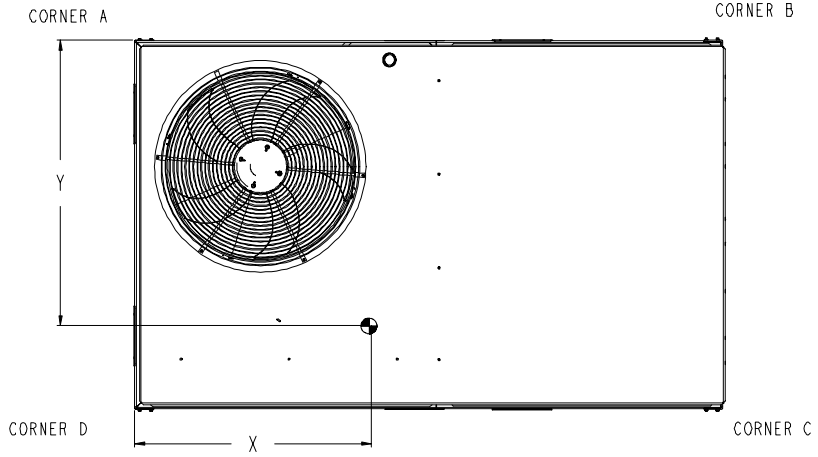

TOP

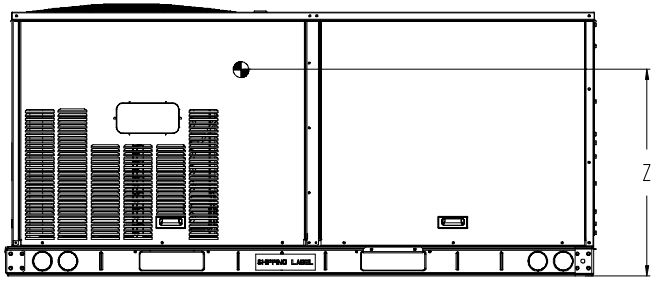

FRONT

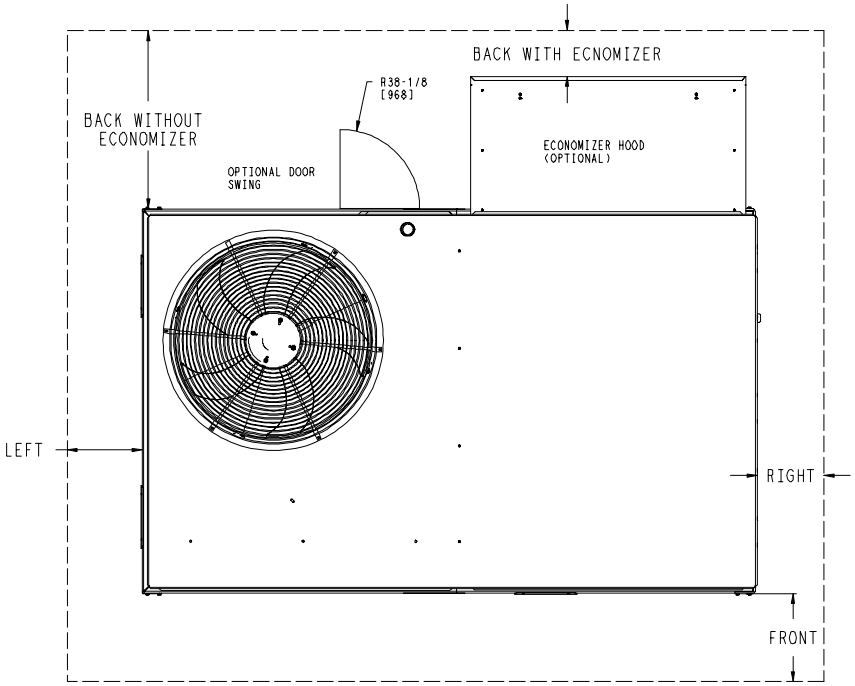

NOTE:

1. FOR ALL MINIMUM CLEARANCES LOCAL CODES OR JURISDICTIONS MAY PREVAIL.

	CLEARANCE		
	SERVICE WITH:	SERVICE WITH:	OPERATING
SURFACE	CONDUCTIVE BARRIER	NONCONDUCTIVE BARRIER	CLEARANCE
FRONT	48 [1219mm]	36 [914mm]	18 [457mm]
LEFT	48 [1219mm]	42 [1067mm]	18 [457mm]
BACK W/O ECON	48 [1219mm]	42 [1067mm]	18 [457mm]
BACK W/ECON	36 [914mm]	36 [914mm]	18 [457mm]
RIGHT	36 [914mm]	36 [914mm]	18 [457mm]
TOP	72 [1829mm]	72 [1829mm]	72 [1829mm]

ITC CLASSIFICATION	SHEET	DATE	SUPERCEDES			REV
U.S. ECCN:NSR	2 OF 3	9/9/24	9/15/23	50GEQ 04-06 SINGLE PACKAGE HEAT PUMP	48TC006647	A

Carrier | THIS DOCUMENT IS THE PROPERTY OF CARRIER CORPORATION AND IS DELIVERED UPON THE EXPRESS CONDITION THAT THE CONTENTS WILL NOT BE DISCLOSED OR USED WITHOUT CARRIER CORPORATION'S WRITTEN CONSENT. | SUBMISSION OF THESE DRAWINGS OR DOCUMENTS DOES NOT CONSTITUTE PART PERFORMANCE OR ACCEPTANCE OF CONTRACT.

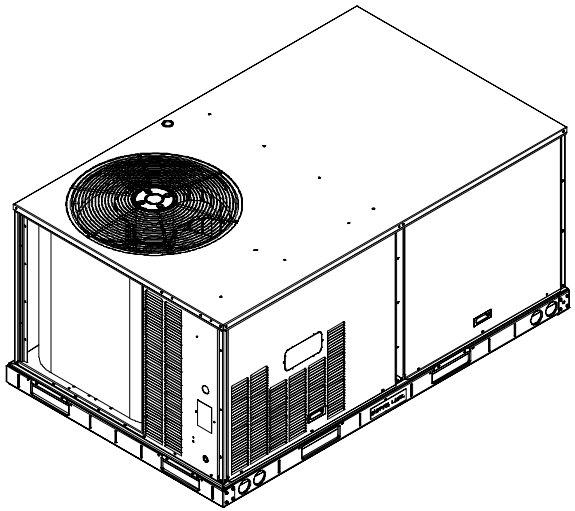

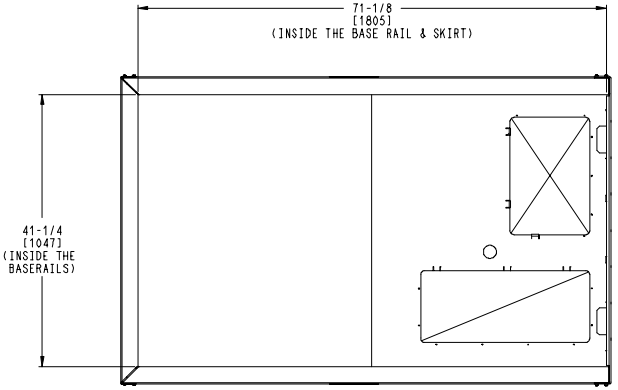

INSIDE BASERAIL DIMENSIONS
BOTTOM

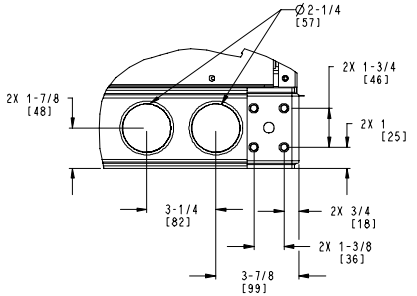

DETAIL **C**
TYP 4 PLCS

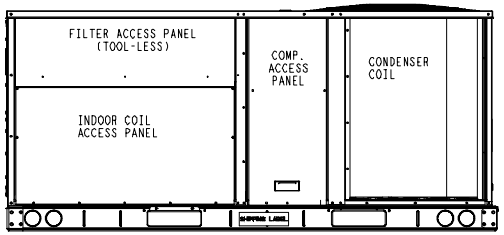

BACK

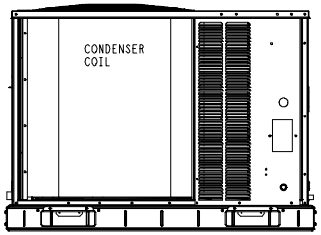

LEFT

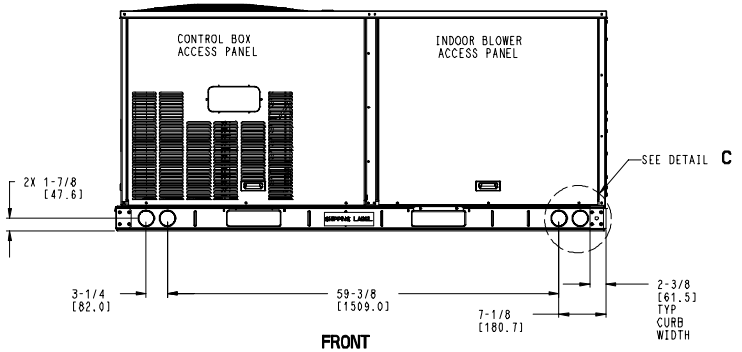

FRONT

ITC CLASSIFICATION	SHEET	DATE	SUPERCEDES			REV
U.S. ECCN:NSR	3 OF 3	9/9/24	9/15/23	50GEQ 04-06 SINGLE PACKAGE HEAT PUMP	48TC006647	A

Performance Summary For ID 7

Project: Climatec - City of Esc - Fire Station 7 04/12/2025
Prepared By: Shawn Harlan 08:35AM

Part Number:50GEQM06A2M5-0A0A0

Refrigerant:	**R-454B**	
ARI SEER:	**17.00**	
ARI SEER2:	**16.00**	
Application EER (Rooftop Unit only):	**11.77**	

Base Unit Dimensions

Unit Length:	**74.4**	in
Unit Width:	**46.6**	in
Unit Height:	**41.4**	in

Operating Weight

Base Unit Weight:	**596**	lb
Al/Cu - Al/Cu - Louvered Hail Guards:	**17**	lb
Total Operating Weight:	**613**	lb

Unit

Unit Voltage-Phase-Hertz:	**208-3-60**	
Air Discharge:	**Vertical**	
Fan Drive Type:	**Direct Drive**	
Actual Airflow:	**2000**	CFM
Site Altitude:	**0**	ft

Cooling Performance

Condenser Entering Air DB:	**95.0**	F
Evaporator Entering Air DB:	**80.0**	F
Evaporator Entering Air WB:	**67.0**	F
Entering Air Enthalpy:	**31.44**	BTU/lb
Evaporator Leaving Air DB:	**57.3**	F
Evaporator Leaving Air WB:	**57.1**	F
Evaporator Leaving Air Enthalpy:	**24.49**	BTU/lb
Unit Discharge Air DB:	**58.5**	F
Unit Discharge Air WB:	**57.6**	F
Unit Discharge Air Enthalpy:	**24.78**	BTU/lb
Gross Cooling Capacity:	**62.53**	MBH
Net Cooling Capacity:	**59.91**	MBH
Gross Sensible Capacity:	**49.01**	MBH
Net Sensible Capacity:	**46.39**	MBH
Compressor Power Input:	**4.02**	kW
Coil Bypass Factor:	**0.014**	

Heating Performance

Outdoor Ambient Temperature:	**47.0**	F
Entering Air Indoor Coil DB:	**70.0**	F
Leaving Air Indoor Coil DB:	**95.2**	F
Total Heating Capacity:	**54.50**	MBH
Integrated Heating Capacity:	**54.50**	MBH
Heating Power Input:	**4.20**	kW
High Temperature COP:	**3.80**	
Low Temperature COP:	**2.50**	
HSPF:	**7.2**	
High Temperature COP2:	**3.80**	
Low Temperature COP2:	**2.50**	
HSPF2:	**7.2**	

Supply Fan

External Static Pressure:	**1.00**	in wg
Fan RPM:	**2036**	
Fan Power:	**0.90**	BHP

Performance Summary For ID 7

Project: Climatec - City of Esc - Fire Station 7 04/12/2025
Prepared By: Shawn Harlan 08:35AM

NOTE: **Selected IFM RPM Range: 1228 - 2390**

Selection includes construction throwaway filter into the base fan curve. This filter is not MERV Rated.

Electrical Data

Voltage Range:	**187 - 253**
Compressor #1 RLA:	**15.4**
Compressor #1 LRA:	**150**
Indoor Fan Motor Type:	**MED**
Indoor Fan Motor FLA (Total):	**9.2**
Power Supply MCA:	**30**
Power Supply MOCP (Fuse or HACR):	**45**
Disconnect Size FLA:	**30**
Disconnect Size LRA:	**166**
Electrical Convenience Outlet:	**None**
Outdoor Fan [Qty / FLA (ea)]:	**1 / 1.3**

Control Panel SCCR: 5kA RMS at Rated Symmetrical Voltage

Acoustics

Sound Power Levels, db re 10E-12 Watts

	Discharge	Inlet	Outdoor
63 Hz	92.3	90.8	85.6
125 Hz	83.5	79.7	84.7
250 Hz	77.6	72.4	80.5
500 Hz	73.9	66.4	76.0
1000 Hz	70.7	68.5	72.4
2000 Hz	67.7	59.3	68.0
4000 Hz	64.3	53.1	62.8
8000 Hz	60.4	46.8	59.3
A-Weighted	77.2	72.6	79.0

Advanced Acoustics

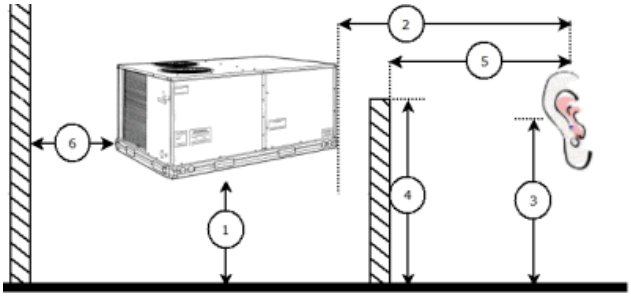

Advanced Accoustics Parameters

1. Unit height above ground:	**30.0**	ft
2. Horizontal distance from unit to receiver:	**50.0**	ft
3. Receiver height above ground:	**5.7**	ft
4. Height of obstruction:	**0.0**	ft
5. Horizontal distance from obstruction to receiver:	**0.0**	ft
6. Horizontal distance from unit to obstruction:	**0.0**	ft

Detailed Acoustics Information

Performance Summary For ID 7

Project: Climatec - City of Esc - Fire Station 7 04/12/2025
Prepared By: Shawn Harlan 08:35AM

Octave Band Center Freq. Hz	63	125	250	500	1k	2k	4k	8k	Overall
A	85.6	84.7	80.5	76.0	72.4	68.0	62.8	59.3	89.2 Lw
B	59.4	68.6	71.9	72.8	72.4	69.2	63.8	58.2	78.5 LwA
C	53.2	52.3	48.1	43.6	40.0	35.6	30.4	26.9	56.8 Lp
D	27.0	36.2	39.5	40.4	40.0	36.8	31.4	25.8	46.1 LpA

Legend
A Sound Power Levels at Unit's Acoustic Center, Lw
B A-Weighted Sound Power Levels at Unit's Acoustic Center, LwA
C Sound Pressure Levels at Specific Distance from Unit, Lp
D A-Weighted Sound Pressure Levels at Specific Distance from Unit, LpA

Calculation methods used in this program are patterned after the ASHRAE Guide; other ASHRAE Publications and the AHRI Acoustical Standards. While a very significant effort has been made to insure the technical accuracy of this program, it is assumed that the user is knowledgeable in the art of system sound estimation and is aware of the tolerances involved in real world acoustical estimation. This program makes certain assumptions as to the dominant sound sources and sound paths which may not always be appropriate to the real system being estimated. Because of this, no assurances can be offered that this software will always generate an accurate sound prediction from user supplied input data. If in doubt about the estimation of expected sound levels in a space, an Acoustical Engineer or a person with sound prediction expertise should be consulted.

Fan Curve

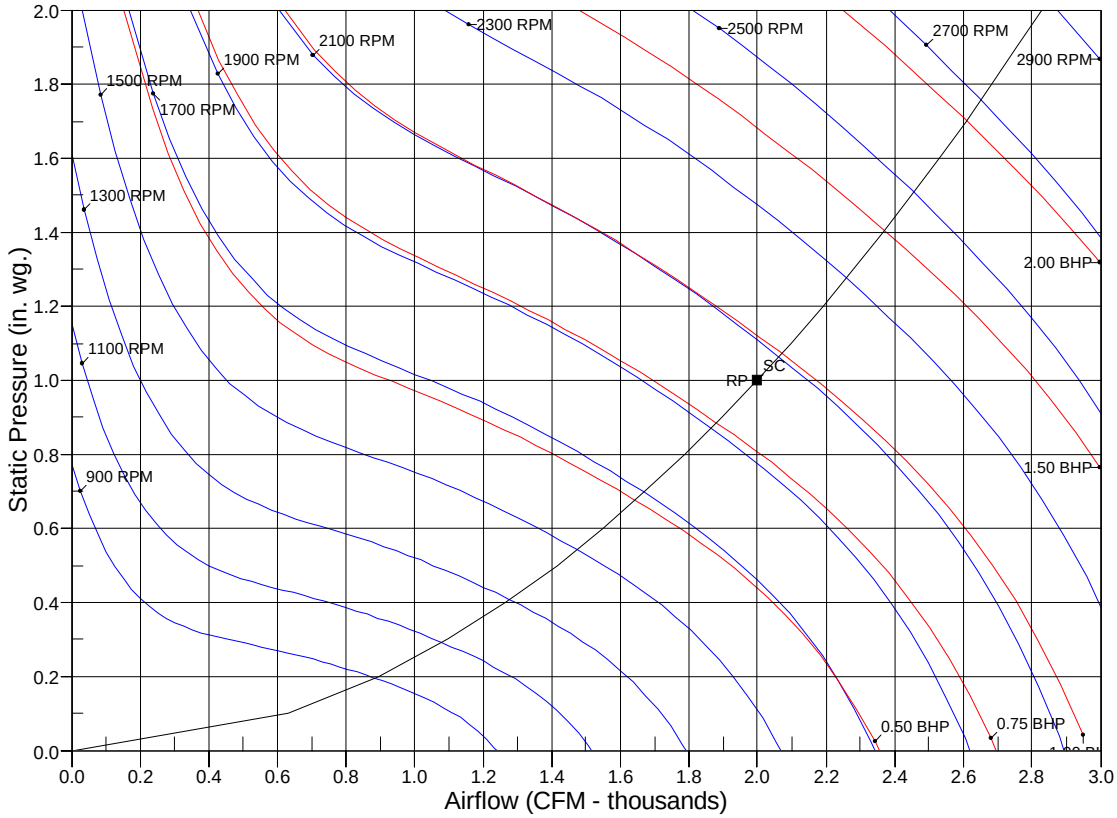

RPM = 2036 BHP = 0.90 Maximum RPM = 2836 Maximum BHP = 3.00
SC - System Curve RP - Rated Point

Outdoor Heat Pump Ductless System

Outdoor Model: **37MBRAQ48AA3**

Carrier

Turn to the experts

Job Data: _____ **Location:** _____

Tag #: _____ **Carrier#:** _____

Date: _____

OUTDOOR STANDARD FEATURES

- Variable Speed (Inverter)
- Factory installed Base Pan Heater
- Factory installed Crankcase Heater
- Low Voltage Controls
- Auto-Restart function
- Condenser High Temp Protection
- Quiet operation
- Anti-corrosive fin coating

RESIDENTIAL APPLICATION LIMITED WARRANTY*

• Ten (10) years if properly registered within ninety (90) days after original installation, parts are warranted to the original purchaser for a period of ten (10) years. Otherwise, parts warranty is five (5) years.

NOTE: Images for illustration purposes only. Actual models may be slightly different.

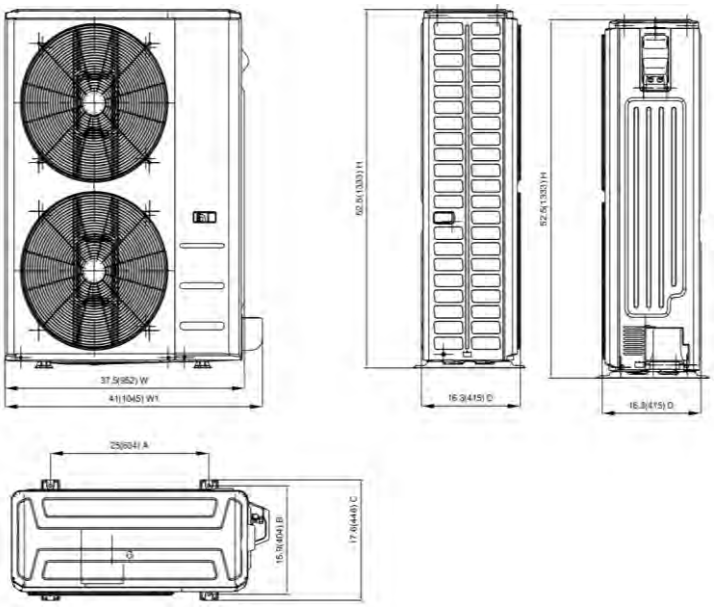

Outdoor - Heat Pump			
System	**Outdoor Model #**		37MBRAQ48AA3
	Outdoor Size		48000
Electrical	Voltage, Phase, Cycle	V/Ph/Hz	208-230/1/60
	MCA	A.	39
	MOPA	A.	40
	SCCR	kA	5
Operating Range	Cooling Outdoor DB Min - Max	°F(°C)	-13~122(-25～50)
	Heating Outdoor DB Min - Max	°F(°C)	-13~75(-25～24)
Piping	Min. Piping Length	ft (m)	9.8 (3)
	Standard Piping Length	ft. (m)	24.6 (7.5)
	Total Piping Length	ft (m)	246(75)
	Piping Lift*	ft (m)	98.4(30)
	Pipe Connection Size - Liquid	in (mm)	3/8"(9.52)
	Pipe Connection Size - Suction	in (mm)	3/4"(19)
Refrigerant	Refrigerant Type		R454B
	Charge	lbs (kg)	7.94(3.6)
	Add'l Refrigerant (between Std & Max Piping Lengths)	Oz/ft (g/m)	0.32(30)
Outdoor Coil	Face Area	Sq. Ft.	6.61
	No. Rows		2
	Fins per inch		22
	Circuits		10
Compressor	Type		TWIN-ROTARY
	Model		EKPQ420D1UMUA
	Oil Type		ESTER OIL
	Oil Charge	Fl. Oz.	47.35
	Rated Current	RLA	7
Airflow & Sound	Airflow	CFM	4240.3
	Sound Pressure	dB(A)	62.5
Dimensions	Height	in (mm)	52.48(1333)
	Width	in (mm)	37.48(952)
	Depth	in (mm)	16.34(415)
	Net Weight	lbs (kg)	208.78(94.7)
	Shipping Height	in (mm)	57.48(1460)
	Shipping Width	in (mm)	43.11(1095)
	Shipping Depth	in (mm)	19.49(495)
	Shipping Net Weight	lbs (kg)	237.44(107.7)

*** Condensing unit above or below indoor unit**

AHRI CERTIFIED www.ahridirectory.org Unitary Small HP AHRI Standard 210/240

Puron Advance™

Carrier Corporation Copyright 2024 • Atlanta, GA, 30339
SUBJECT TO CHANGE WITHOUT NOTICE

Air Handler Heat Pump Ductless System

Indoor Model: **45MBAAQ48XA3**

Carrier

Turn to the experts

Job Data:

Tag #:

Date:

Location:

Carrier#:

INDOOR STANDARD FEATURES

- Modes: Cool, Heat, Dry, Fan, Auto
- 4-way installation (Up flow, Down flow, Right, Left)
- Auto-Restart function
- Quiet indoor operation
- Aluminum hydrophilic pre-coated fins

RESIDENTIAL APPLICATION LIMITED WARRANTY*

- Ten (10) years if properly registered within ninety (90) days after original installation, parts are warranted to the original purchaser for a period of ten (10) years. Otherwise, parts warranty is five (5) years.

NOTE: Images for illustration purposes only. Actual models may be slightly different.

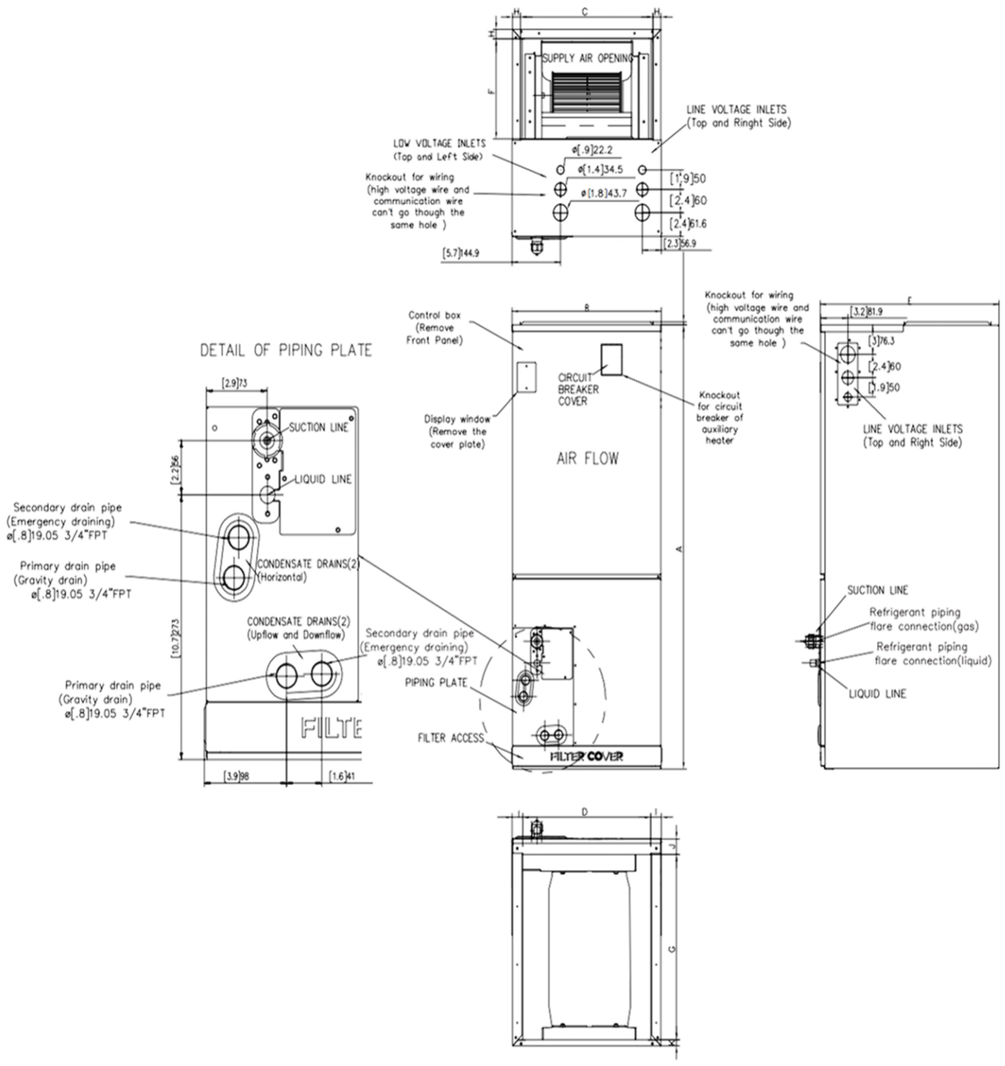

45MBAAQ48XA3			
System	**Indoor Model #**		45MBAAQ48XA3
	Indoor Size		48000
Electrical	Voltage, Phase, Cycle	V/Ph/Hz	208-230/1/60
	Power Supply		Indoor unit powered by outdoor unit
	MCA	A.	9.75
Operating Range	Cooling Indoor DB Min - Max	°F(°C)	60~90(16～32)
	Heating Indoor DB Min - Max	°F(°C)	32~86(0～30)
Indoor Coil	No. Rows		5
	Fins per inch		20
	Circuits		14
Indoor Unit	Number of Fan Speeds		820/720/615
	Airflow (highest to lowest)	CFM	1601.0 / 1471.5 / 1283.1 / 1094.8 / /
	Sound Pressure (highest to lowest)	dB(A)	54.5/51/48
Dimensions	Height	in (mm)	52.99(1346)
	Width	in (mm)	24.49(622)
	Depth	in (mm)	21.02(534)
	Net Weight	lbs (kg)	161.82(73.4)
	Shipping Height	in (mm)	21.20(640)
	Shipping Width	in (mm)	56.30(1430)
	Shipping Depth	in (mm)	28.15(715)
	Shipping Net Weight	lbs (kg)	191.58(86.9)
CONTROLS			
Standard	Wireless Remote Controller (°F/°C Convertible)		
Optional	Wired Remote Control 7 Day Programmable		KSACN1401AAA
	24V Mini Interface		KSAIC0601230

INDOOR UNIT DIMENSIONS					
Dimensions		36K		48K/60K	
		Inch	mm	Inch	mm
A	Model Height	49	1245	53	1346
B	Model Width	21	534	24.5	622
C	S.A. Opening Width	19.1	486	22.6	575
D	R.A. Opening Width	18.6	473	22.1	562
E	Model Depth	21	534	21	534
F	S.A. Opening Depth	10.3	260	10.3	260
G	R.A. Opening Depth	18.8	476	18.8	476
H	S.A. Opening Clearance	0.9	24	0.9	24
I	R.A. Opening Side Clearance	1.3	32	1.1	28
J	R.A. Opening Front Clearance	1.6	41	1.6	41
K	R.A. Opening Back Clearance	0.6	16	0.8	19

Carrier Corporation Copyright 2024 • Atlanta, GA, 30339
SUBJECT TO CHANGE WITHOUT NOTICE

AHRI CERTIFIED™ www.ahridirectory.org
Unitary Small HP
AHRI Standard 210/240
Certification applies only when the complete system is listed with AHRI.

C SA US

Puron Advance™

SUBMITTAL

Project

Climatec - City of Esc - HARFF

Date

Saturday, April 12, 2025

Shawn Harlan
Sigler - Brea
205 Puente Street
Brea CA

Table Of Contents

Project: Climatec - City of Esc - HARFF 04/12/2025
Prepared By: Shawn Harlan 09:23AM

ID 16 **3**
Unit Report 4
Certified Drawing 5
Performance Summary 7
ID 20 **10**
Unit Report 11
Certified Drawing 12
Performance Summary 15

ID 16

Tag Cover Sheet
Unit Report
Certified Drawing
Performance Report

Unit Report For ID 16

Project: Climatec - City of Esc - HARFF
Prepared By: Shawn Harlan

04/12/2025
09:23AM

Unit Parameters

Unit Model: **50FEQM14A2M6-0A0A0**
Unit Size: **14 (12.5 Tons)**
Volts-Phase-Hertz: **460-3-60**
Heating Type: **Heat Pump**
Refrigerant: **R-454B**
Heat Control: **Two-Stage Cooling, Single Circuit**
Duct Cfg: **Vertical Supply / Vertical Return**

Dimensions (ft. in.) & Weight (lb.) ***

Unit Length: **9' 7.875"**
Unit Width: **5' 3.375"**
Unit Height: **4' 9.375"**
Total Operating Weight: **1284** lb

*** Weights and Dimensions are approximate. Weight does not include unit packaging. Approximate dimensions are provided primarily for shipping purposes. For exact dimensions and weights, refer to appropriate product data catalog.

Lines and Filters

Return Air Filter Type: **Throwaway**
Return Air Filter Quantity: **6**
Return Air Filter Size: **18 x 24 x 2**

Selection includes construction throwaway filter into the base fan curve.

Unit Configuration

Standard/Medium Static - EcoBlue Vane Axial Fan
Al/Cu - Al/Cu - Louvered Hail Guards
Standard Electromechanical Controls (can be used with field installed economizers and dampers)
Standard

Warranty Information

1-Year parts (STD.)
5-Year Compressor (std.)

No optional warranties were selected.

NOTE: Please see Warranty Catalog 500-089 for explanation of policies and ordering methods.

Ordering Information

Part Number	Description	Quantity
50FEQM14A2M6-0A0A0	Rooftop Unit	1

Certified Drawing for ID 16

Project: Climatec - City of Esc - HARFF
Prepared By: Shawn Harlan

04/12/2025
09:23AM

NOTES:

1. DIMENSIONS ARE IN INCHES. DIMENSIONS IN [ ] ARE IN MILLIMETERS.
2. CENTER OF GRAVITY
3. DIRECTION OF AIR FLOW

Carrier | THIS DOCUMENT IS THE PROPERTY OF CARRIER CORPORATION AND IS DELIVERED UPON THE EXPRESS CONDITION THAT THE CONTENTS WILL NOT BE DISCLOSED OR USED WITHOUT CARRIER CORPORATION'S WRITTEN CONSENT. | SUBMISSION OF THESE DRAWINGS OR DOCUMENTS DOES NOT CONSTITUTE PART PERFORMANCE OR ACCEPTANCE OF CONTRACT.

	CONNECTION SIZES
B	2 1/2" [64] DIA POWER SUPPLY HOLE
D	7/8" [22] DIA FIELD CONTROL WIRING HOLE
E	3/4"-14 NPT CONDENSATE DRAIN
F	7/8" [22] DIA FIELD CONVENIENCE OUTLET HOLE

THRU-THE-BASE CHART
THESE HOLES REQUIRED FOR USE CRBTMPWR005A00,006A00,007A00

ACCESSORY NO.		THREADED CONDUIT SIZE	WIRE USE	REQ'D HOLE SIZES (MAX.)
005	W	1/2"	ACC.	7/8" [22.2]
	X	1/2"	24V	7/8" [22.2]
	Y	1 1/4"	POWER	1 1/2" [38.1]
006	W	1/2"	ACC.	7/8" [22.2]
	X	1/2"	24V	7/8" [22.2]
	Y	1 1/2"	POWER	2" [50.8]
007	W	1/2"	ACC.	7/8" [22.2]
	X	1/2"	24V	7/8" [22.2]
	Y	2"	POWER	2 1/2" [63.5]
	FOR "THRU-THE-BASEPAN" FACTORY OPTION, FITTINGS FOR X & Y ARE PROVIDED AS SPECIFIED ON "006".			

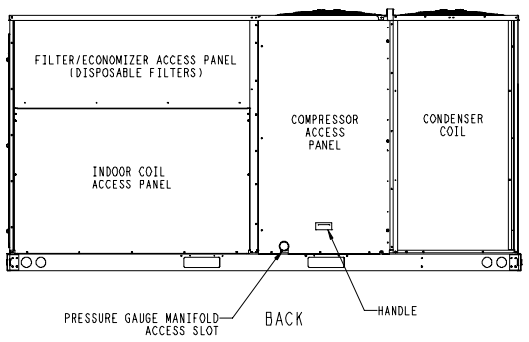

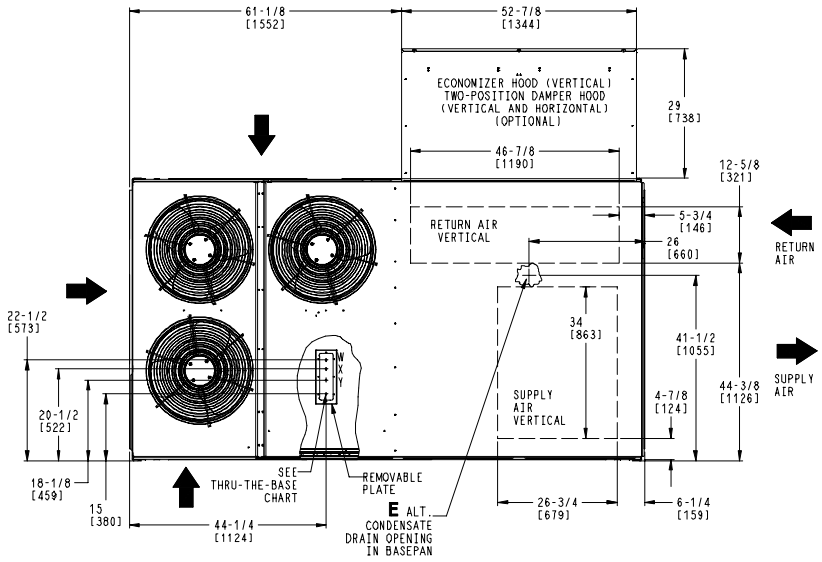

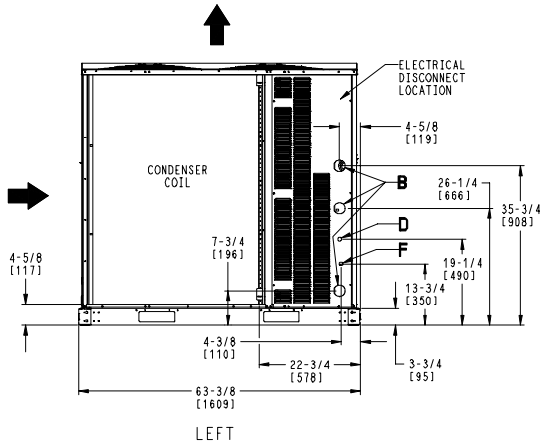

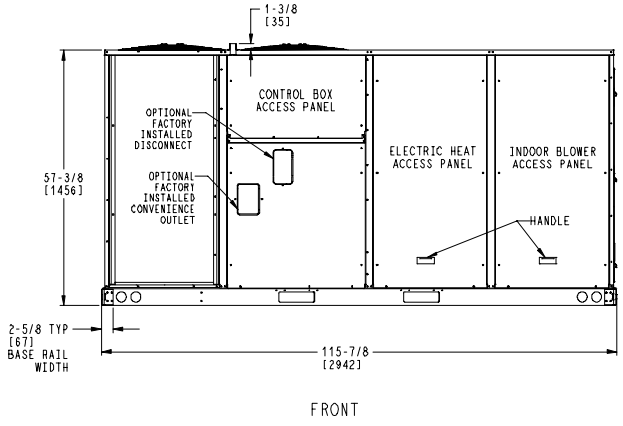

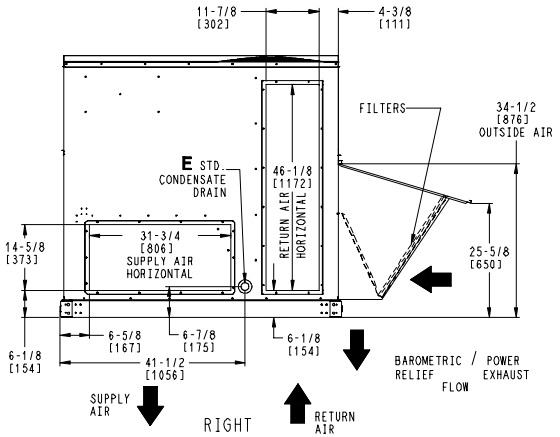

ITC CLASSIFICATION	SHEET	DATE	SUPERCEDES			REV
U.S. ECCN:NSR	1 OF 2	8/10/23	-	50FEQ 14 SINGLE ZONE ELECTRICAL HEAT PUMP	50TM003168	-

UNIT	STD UNIT WEIGHT		CORNER WEIGHT (A)		CORNER WEIGHT (B)		CORNER WEIGHT (C)		CORNER WEIGHT (D)		C.G.		
	LBS.	KG.	LBS.	KG.	LBS.	KG.	LBS.	KG.	LBS.	KG.	X	Y	Z
50FEQ-14	1250	567	350	159	338	153	277	125	286	130	57 [1448]	28 1/2 [724]	24 [610]

STANDARD UNIT WEIGHT IS WITHOUT ELECTRIC HEAT & WITHOUT PACKAGING.
FOR OPTIONS & ACCESSORIES, REFER TO THE PRODUCT DATA CATALOG.

Carrier

THIS DOCUMENT IS THE PROPERTY OF CARRIER CORPORATION AND IS DELIVERED UPON THE EXPRESS CONDITION THAT THE CONTENTS WILL NOT BE DISCLOSED OR USED WITHOUT CARRIER CORPORATION'S WRITTEN CONSENT.

SUBMISSION OF THESE DRAWINGS OR DOCUMENTS DOES NOT CONSTITUTE PART PERFORMANCE OR ACCEPTANCE OF CONTRACT.

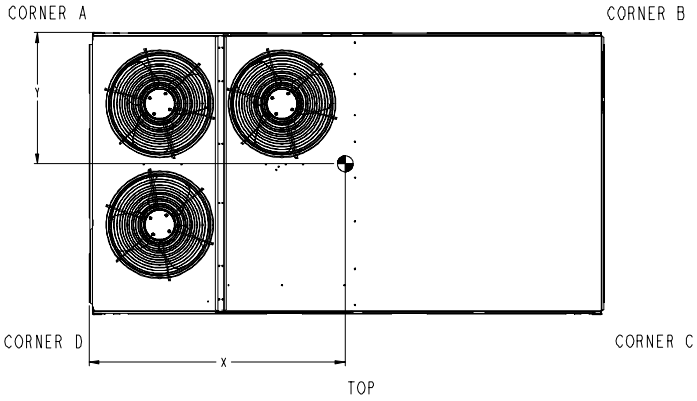

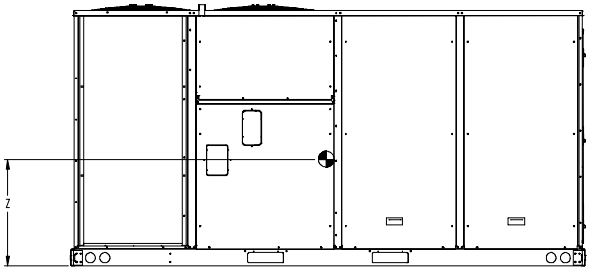

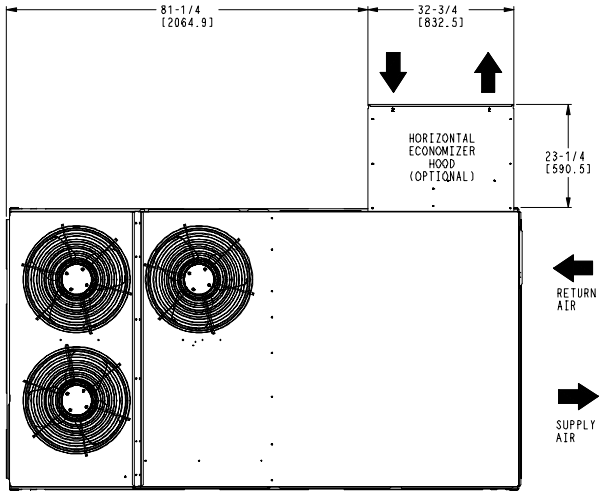

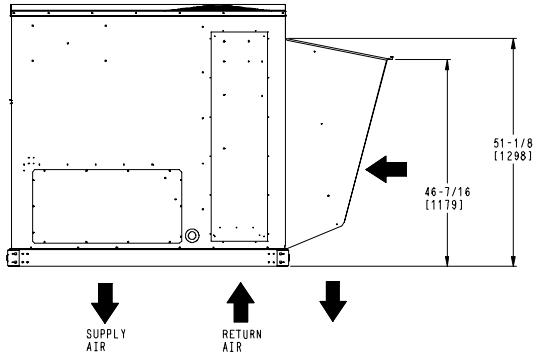

HORIZONTAL ECONOMIZER

ITC CLASSIFICATION	SHEET	DATE	SUPERCEDES			REV
U.S. ECCN:NSR	2 OF 2	8/10/23	-	50FEQ 14 SINGLE ZONE ELECTRICAL HEAT PUMP	50TM003168	-

Performance Summary For ID 16

Project: Climatec - City of Esc - HARFF 04/12/2025
Prepared By: Shawn Harlan 09:23AM

Part Number:50FEQM14A2M6-0A0A0

Refrigerant:	**R-454B**	
ARI EER:	**10.60**	
Application EER (Rooftop Unit only):	**11.00**	
IEER:	**15.0**	

Base Unit Dimensions

Unit Length:	**115.9**	in
Unit Width:	**63.4**	in
Unit Height:	**57.4**	in

Operating Weight

Base Unit Weight:	**1250**	lb
Al/Cu - Al/Cu - Louvered Hail Guards:	**34**	lb
Total Operating Weight:	**1284**	lb

Unit

Unit Voltage-Phase-Hertz:	**460-3-60**	
Air Discharge:	**Vertical**	
Fan Drive Type:	**Vane Axial**	
Actual Airflow:	**5000**	CFM
Site Altitude:	**0**	ft

Cooling Performance

Condenser Entering Air DB:	**95.0**	F
Evaporator Entering Air DB:	**80.0**	F
Evaporator Entering Air WB:	**67.0**	F
Entering Air Enthalpy:	**31.44**	BTU/lb
Evaporator Leaving Air DB:	**58.7**	F
Evaporator Leaving Air WB:	**57.3**	F
Evaporator Leaving Air Enthalpy:	**24.58**	BTU/lb
Unit Discharge Air DB:	**59.7**	F
Unit Discharge Air WB:	**57.7**	F
Unit Discharge Air Enthalpy:	**24.82**	BTU/lb
Gross Cooling Capacity:	**154.23**	MBH
Net Cooling Capacity:	**148.81**	MBH
Gross Sensible Capacity:	**115.02**	MBH
Net Sensible Capacity:	**109.60**	MBH
Compressor Power Input:	**11.34**	kW
Coil Bypass Factor:	**0.059**	

Heating Performance

Outdoor Ambient Temperature:	**47.0**	F
Entering Air Indoor Coil DB:	**70.0**	F
Leaving Air Indoor Coil DB:	**95.3**	F
Total Heating Capacity:	**136.50**	MBH
Integrated Heating Capacity:	**136.50**	MBH
Heating Power Input:	**11.06**	kW
High Temperature COP:	**3.30**	
Low Temperature COP:	**2.05**	

Supply Fan

External Static Pressure:	**1.00**	in wg
Fan RPM:	**1546**	
Fan Power:	**1.86**	BHP
NOTE:	**Selected IFM RPM Range: 947 - 2200**	

Selection includes construction throwaway filter into the base fan curve. This filter is not MERV Rated.

Electrical Data

Performance Summary For ID 16

Project: Climatec - City of Esc - HARFF
Prepared By: Shawn Harlan

04/12/2025
09:23AM

Voltage Range:	**414 - 506**
Compressor #1 RLA:	**8.8**
Compressor #1 LRA:	**75**
Compressor #2 RLA:	**8.8**
Compressor #2 LRA:	**75**
Indoor Fan Motor Type:	**MED**
Indoor Fan Motor FLA (Total):	**3.5**
Power Supply MCA:	**26**
Power Supply MOCP (Fuse or HACR):	**30**
Disconnect Size FLA:	**27**
Disconnect Size LRA:	**163**
Electrical Convenience Outlet:	**None**
Outdoor Fan [Qty / FLA (ea)]:	**3 / 0.8**

Control Panel SCCR: 5kA RMS at Rated Symmetrical Voltage

Acoustics

Sound Power Levels, db re 10E-12 Watts

	Discharge	Inlet	Outdoor
63 Hz	87.5	82.2	89.3
125 Hz	81.9	76.2	85.2
250 Hz	78.4	71.9	80.3
500 Hz	75.6	68.2	78.0
1000 Hz	76.7	67.9	77.0
2000 Hz	72.2	61.2	74.4
4000 Hz	66.4	52.3	73.7
8000 Hz	58.3	46.7	68.9
A-Weighted	80.3	71.7	83.0

Advanced Acoustics

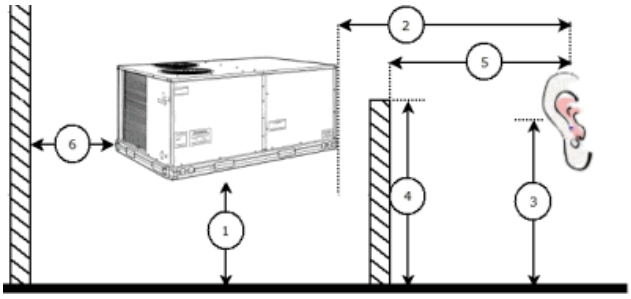

Advanced Accoustics Parameters

1. Unit height above ground:	**30.0**	ft
2. Horizontal distance from unit to receiver:	**50.0**	ft
3. Receiver height above ground:	**5.7**	ft
4. Height of obstruction:	**0.0**	ft
5. Horizontal distance from obstruction to receiver:	**0.0**	ft
6. Horizontal distance from unit to obstruction:	**0.0**	ft

Detailed Acoustics Information

Octave Band Center Freq. Hz	63	125	250	500	1k	2k	4k	8k	Overall
A	89.3	85.2	80.3	78.0	77.0	74.4	73.7	68.9	91.6 Lw

Performance Summary For ID 16

Project: Climatec - City of Esc - HARFF
Prepared By: Shawn Harlan

04/12/2025
09:23AM

B	63.1	69.1	71.7	74.8	77.0	75.6	74.7	67.8	82.5 LwA
C	56.9	52.8	47.9	45.6	44.6	42.0	41.3	36.5	59.2 Lp
D	30.7	36.7	39.3	42.4	44.6	43.2	42.3	35.4	50.1 LpA

Legend
A Sound Power Levels at Unit's Acoustic Center, Lw
B A-Weighted Sound Power Levels at Unit's Acoustic Center, LwA
C Sound Pressure Levels at Specific Distance from Unit, Lp
D A-Weighted Sound Pressure Levels at Specific Distance from Unit, LpA

Calculation methods used in this program are patterned after the ASHRAE Guide; other ASHRAE Publications and the AHRI Acoustical Standards. While a very significant effort has been made to insure the technical accuracy of this program, it is assumed that the user is knowledgeable in the art of system sound estimation and is aware of the tolerances involved in real world acoustical estimation. This program makes certain assumptions as to the dominant sound sources and sound paths which may not always be appropriate to the real system being estimated. Because of this, no assurances can be offered that this software will always generate an accurate sound prediction from user supplied input data. If in doubt about the estimation of expected sound levels in a space, an Acoustical Engineer or a person with sound prediction expertise should be consulted.

Fan Curve

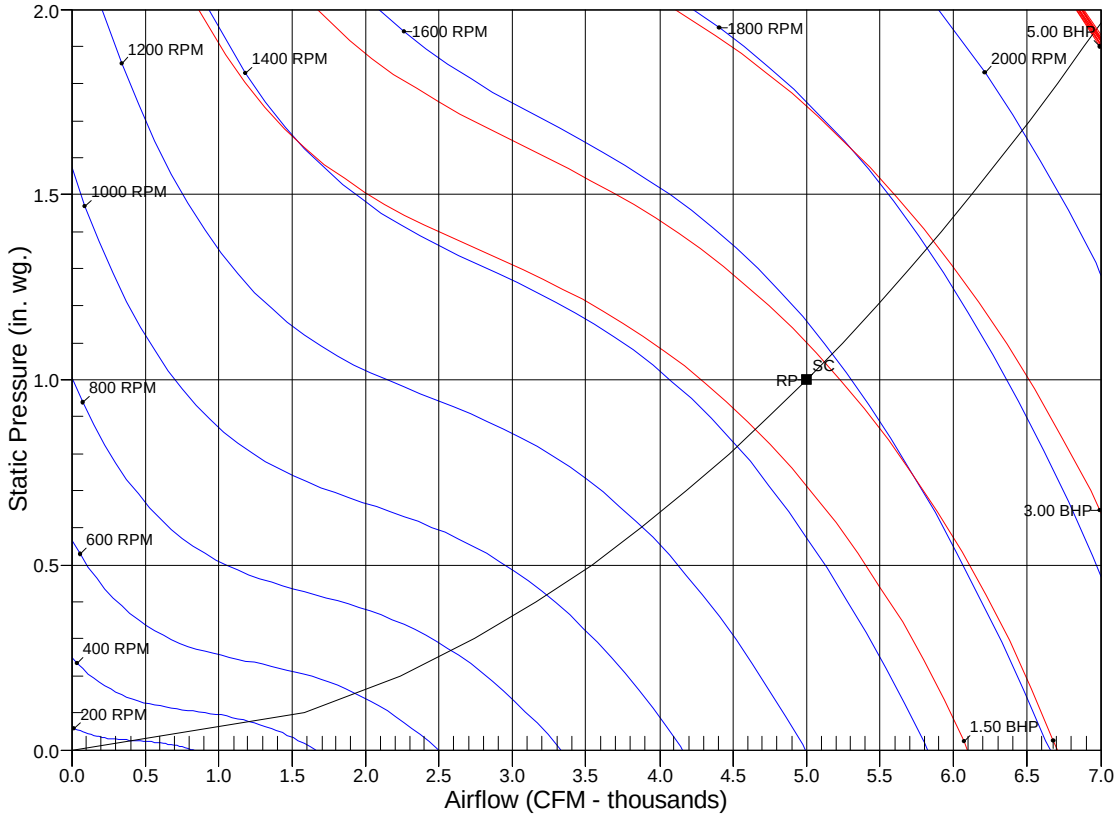

RPM = 1546 BHP = 1.86 Maximum RPM = 2200 Maximum BHP = 5.00
SC - System Curve RP - Rated Point

ID 20

Tag Cover Sheet
Unit Report
Certified Drawing
Performance Report

Unit Report For ID 20

Project: Climatec - City of Esc - HARFF
Prepared By: Shawn Harlan

04/12/2025
09:23AM

Unit Parameters

Unit Model: **50FEQM08A2M6-0A0A0**
Unit Size: **08 (7.5 Tons)**
Volts-Phase-Hertz: **460-3-60**
Heating Type: **Heat Pump**
Refrigerant: **R-454B**
Heat Control: **Two-Stage Cooling, Single Circuit**
Duct Cfg: **Vertical Supply / Vertical Return**

Dimensions (ft. in.) & Weight (lb.) ***

Unit Length: **7' 4.125"**
Unit Width: **4' 11.5"**
Unit Height: **3' 0.375"**
Total Operating Weight: **821** lb

*** Weights and Dimensions are approximate. Weight does not include unit packaging. Approximate dimensions are provided primarily for shipping purposes. For exact dimensions and weights, refer to appropriate product data catalog.

Lines and Filters

Return Air Filter Type: **Throwaway**
Return Air Filter Quantity: **4**
Return Air Filter Size: **20 x 20 x 2**

Selection includes construction throwaway filter into the base fan curve.

Unit Configuration

Standard/Medium Static - EcoBlue Vane Axial Fan
Al/Cu - Al/Cu - Louvered Hail Guards
Standard Electromechanical Controls (can be used with field installed economizers and dampers)
Standard

Warranty Information

1-Year parts (STD.)
5-Year Compressor (std.)

No optional warranties were selected.

NOTE: Please see Warranty Catalog 500-089 for explanation of policies and ordering methods.

Ordering Information

Part Number	Description	Quantity
50FEQM08A2M6-0A0A0	Rooftop Unit	1

Certified Drawing for ID 20

Project: Climatec - City of Esc - HARFF
Prepared By: Shawn Harlan

04/12/2025
09:23AM

NOTES:

1. DIMENSIONS ARE IN INCHES. DIMENSIONS IN [ ] ARE IN MILLIMETERS.
2. CENTER OF GRAVITY
3. DIRECTION OF AIR FLOW
4. ALL VIEW DRAWN USING 3RD ANGLE

UNIT	OUTDOOR COIL TYPE	J	K	H
50FEQ-08	RTPF	49 3/8 [1253]	36 3/8 [925]	15 7/8 [403]
50FEQ-09	RTPF	49 3/8 [1253]	36 3/8 [925]	15 7/8 [403]

RTPF - ROUND TUBE, PLATE FIN (COPPER/ALUM)

Carrier
THIS DOCUMENT IS THE PROPERTY OF CARRIER CORPORATION AND IS DELIVERED UPON THE EXPRESS CONDITION THAT THE CONTENTS WILL NOT BE DISCLOSED OR USED WITHOUT CARRIER CORPORATION'S WRITTEN CONSENT.
SUBMISSION OF THESE DRAWINGS OR DOCUMENTS DOES NOT CONSTITUTE PART PERFORMANCE OR ACCEPTANCE OF CONTRACT.

	CONNECTION SIZES
A	1 3/8" [35] DIA FIELD POWER SUPPLY HOLE
B	2 1/2" [64] DIA POWER SUPPLY KNOCKOUT
C	1 3/4" [51] DIA GAUGE ACCESS PLUG
D	7/8" [22] DIA FIELD CONTROL WIRING HOLE
E	3/4"-14 NPT CONDENSATE DRAIN
G	2 " [51] DIA POWER SUPPLY KNOCK-OUT

THRU-THE-BASE CHART (FIELD INST)

THESE HOLES REQUIRED FOR USE WITH ACCY KITS: CRBTMPWR002A01

	THREADED CONDUIT SIZE	WIRE USE	REQ'D HOLE SIZES (MAX.)
W	1/2"	ACC.	7/8" [22.2]
X	1/2"	24V	7/8" [22.2]
Y	1 1/4" (002)	POWER	1 3/4" [44.4]

THRU-THE-BASE CHART (FIOP)

FOR "THRU-THE-BASEPAN" FACTORY OPTION, FITTINGS FOR ONLY X & Y ARE PROVIDED: (1) 1/2" & (1) 1 1/4" ELECTRICAL FITTINGS.

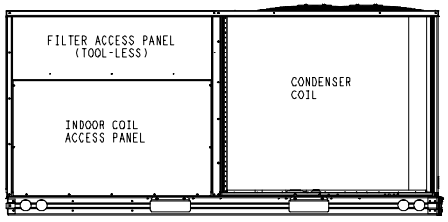

BACK

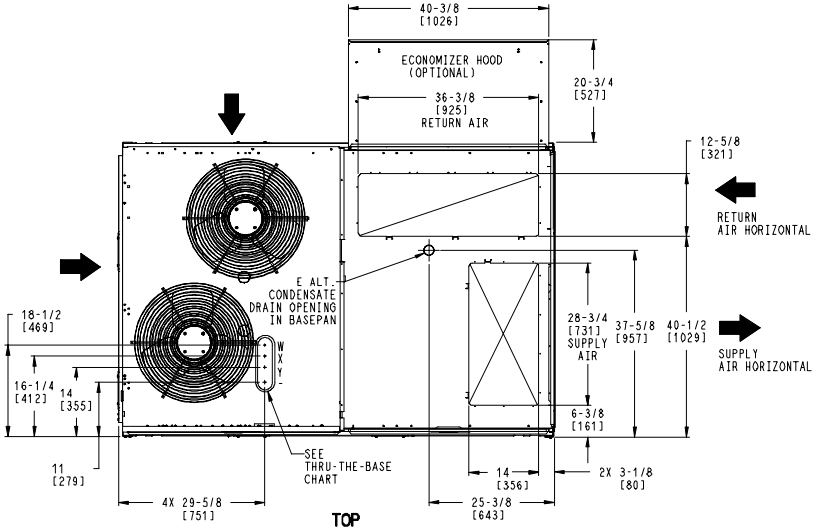

TOP

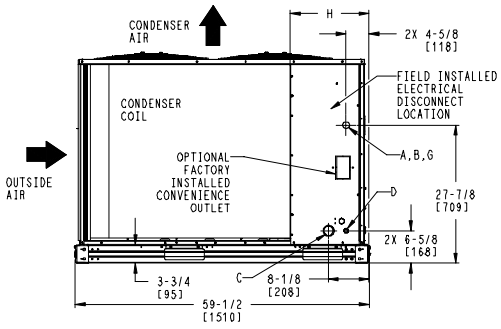

LEFT

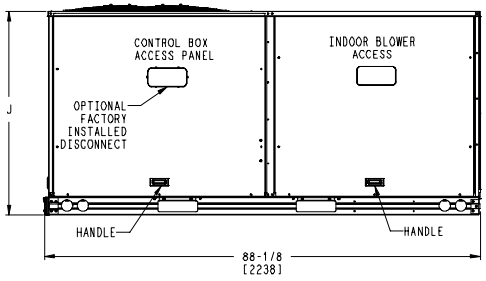

FRONT

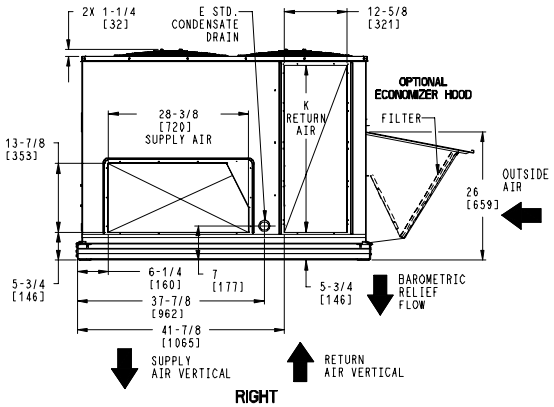

RIGHT

ITC CLASSIFICATION	SHEET	DATE	SUPERCEDES			REV
U.S. ECCN:NSR	1 OF 3	2/21/24	8/2/23	50FEQ 08,09 SINGLE ZONE ELECTRICAL HEAT PUMP	48TM009326	A

UNIT	OUTDOOR COIL TYPE	STD. UNIT WEIGHT ***		CORNER WEIGHT (A)		CORNER WEIGHT (B)		CORNER WEIGHT (C)		CORNER WEIGHT (D)		C.G.		
		LBS.	KG.	LBS.	KG.	LBS.	KG.	LBS.	KG.	LBS.	KG.	X	Y	Z
50FEQ-08	RTPF	805	365	205	93	167	76	194	88	239	108	39 1/2 [1003]	32 [813]	19 1/8 [486]
50FEQ-09	RTPF	867	393	153	69	196	89	228	103	178	81	38 [965]	34 1/2 [876]	19 1/8 [486]
RTPF - ROUND TUBE, PLATE FIN (COPPER/ALUM)														

*** STANDARD UNIT WEIGHT IS WITHOUT ELECTRIC HEAT AND WITHOUT PACKAGING.
FOR OTHER OPTIONS AND ACCESSORIES, REFER TO THE PRODUCT DATA CATALOG.

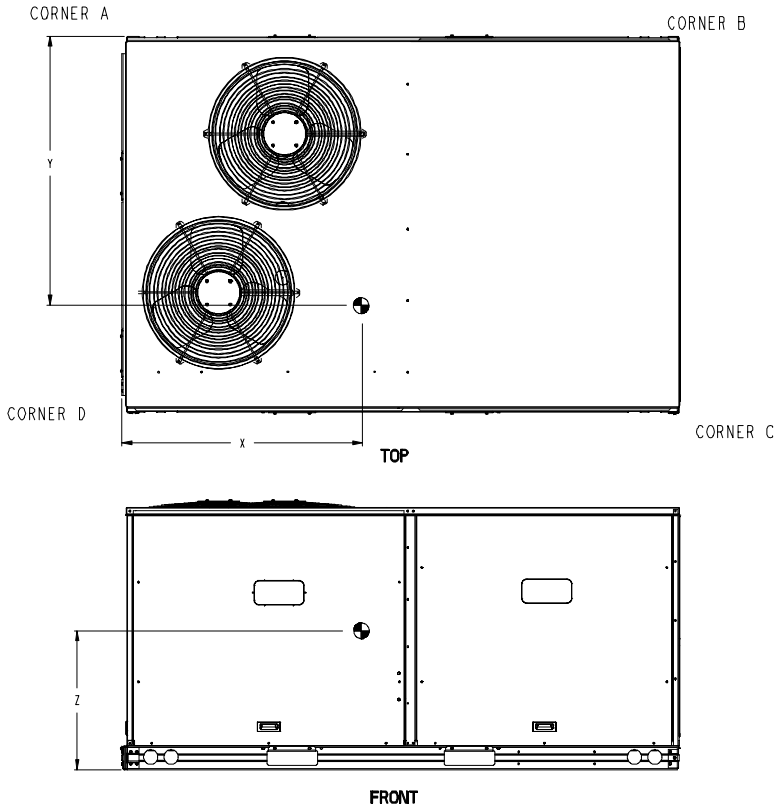

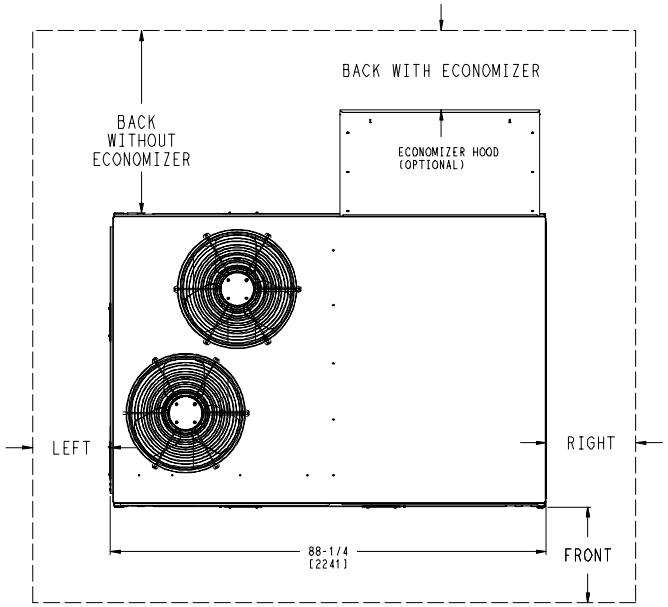

NOTE:

1. FOR ALL MINIMUM CLEARANCES LOCAL CODES OR JURISDICTIONS MAY PREVAIL.

	CLEARANCE	
	SERVICE WITH:	SERVICE WITH:
SURFACE	CONDUCTIVE BARRIER	NONCONDUCTIVE BARRIER
FRONT	48 [1219mm]	36 [914mm]
LEFT	48 [1219mm]	42 [1067mm]
BACK W/O ECON	48 [1219mm]	42 [1067mm]
BACK W/ECON	36 [914mm]	36 [914mm]
RIGHT	36 [914mm]	36 [914mm]
TOP	72 [1829mm]	72 [1829mm]

ITC CLASSIFICATION	SHEET	DATE	SUPERCEDES			REV
U.S. ECCN:NSR	2 OF 3	2/21/24	8/2/23	50FEQ 08,09 SINGLE ZONE ELECTRICAL HEAT PUMP	48TM009326	A

Certified Drawing for ID 20

Project: Climatec - City of Esc - HARFF
Prepared By: Shawn Harlan

04/12/2025
09:23AM

Carrier | THIS DOCUMENT IS THE PROPERTY OF CARRIER CORPORATION AND IS DELIVERED UPON THE EXPRESS CONDITION THAT THE CONTENTS WILL NOT BE DISCLOSED OR USED WITHOUT CARRIER CORPORATION'S WRITTEN CONSENT. | SUBMISSION OF THESE DRAWINGS OR DOCUMENTS DOES NOT CONSTITUTE PART PERFORMANCE OR ACCEPTANCE OF CONTRACT.

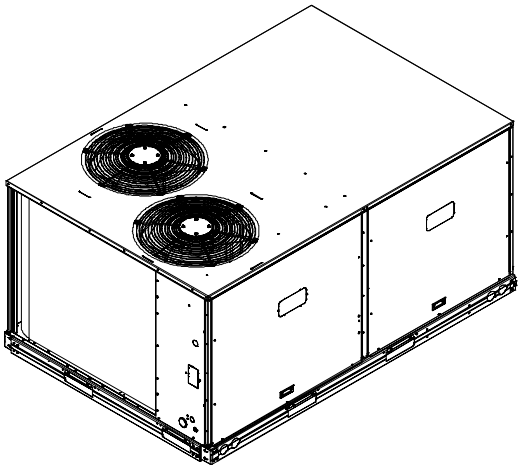

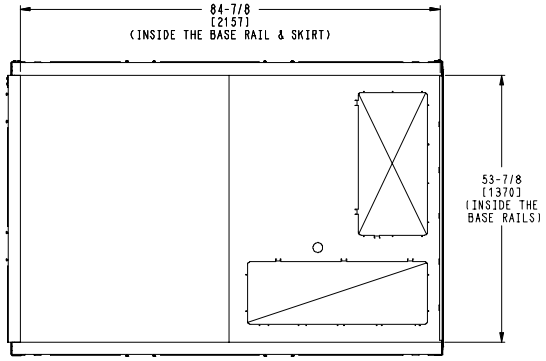

INSIDE BASERAIL DIMENSIONS

BOTTOM

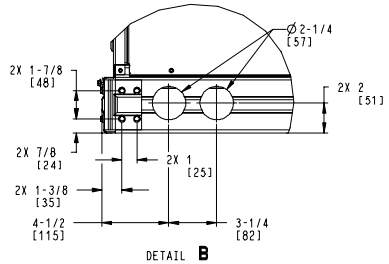

DETAIL **B**
AT 2 PLCS

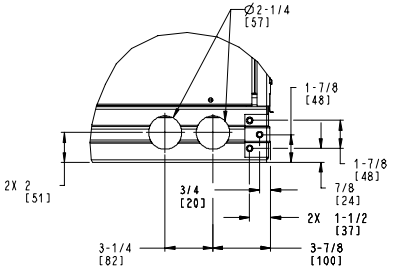

DETAIL **C**
AT 2 PLCS

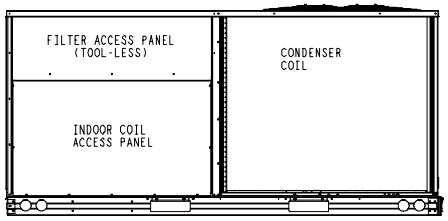

BACK

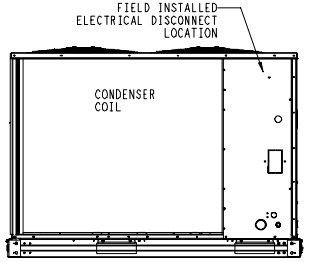

LEFT

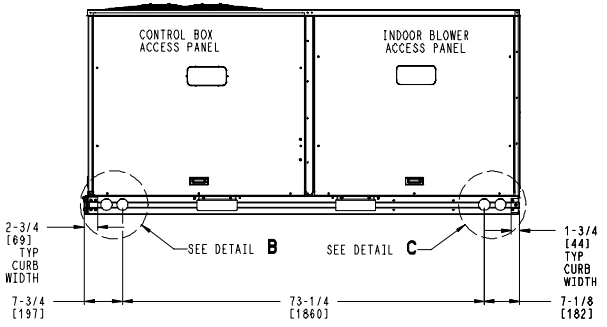

FRONT

ITC CLASSIFICATION	SHEET	DATE	SUPERCEDES			REV
U.S. ECCN:NSR	3 OF 3	2/21/24	8/2/23	50FEQ 08,09 SINGLE ZONE ELECTRICAL HEAT PUMP	48TM009326	A

Performance Summary For ID 20

Project: Climatec - City of Esc - HARFF
Prepared By: Shawn Harlan

04/12/2025
09:23AM

Part Number:50FEQM08A2M6-0A0A0

Refrigerant:	**R-454B**	
ARI EER:	**11.20**	
Application EER (Rooftop Unit only):	**11.32**	
IEER:	**15.0**	

Base Unit Dimensions

Unit Length:	**88.1**	in
Unit Width:	**59.5**	in
Unit Height:	**36.4**	in

Operating Weight

Base Unit Weight:	**805**	lb
Al/Cu - Al/Cu - Louvered Hail Guards:	**16**	lb
Total Operating Weight:	**821**	lb

Unit

Unit Voltage-Phase-Hertz:	**460-3-60**	
Air Discharge:	**Vertical**	
Fan Drive Type:	**Vane Axial**	
Actual Airflow:	**3000**	CFM
Site Altitude:	**0**	ft

Cooling Performance

Condenser Entering Air DB:	**95.0**	F
Evaporator Entering Air DB:	**80.0**	F
Evaporator Entering Air WB:	**67.0**	F
Entering Air Enthalpy:	**31.44**	BTU/lb
Evaporator Leaving Air DB:	**57.8**	F
Evaporator Leaving Air WB:	**57.1**	F
Evaporator Leaving Air Enthalpy:	**24.47**	BTU/lb
Unit Discharge Air DB:	**59.0**	F
Unit Discharge Air WB:	**57.6**	F
Unit Discharge Air Enthalpy:	**24.75**	BTU/lb
Gross Cooling Capacity:	**94.00**	MBH
Net Cooling Capacity:	**90.28**	MBH
Gross Sensible Capacity:	**71.86**	MBH
Net Sensible Capacity:	**68.14**	MBH
Compressor Power Input:	**6.29**	kW
Coil Bypass Factor:	**0.061**	

Heating Performance

Outdoor Ambient Temperature:	**47.0**	F
Entering Air Indoor Coil DB:	**70.0**	F
Leaving Air Indoor Coil DB:	**96.1**	F
Total Heating Capacity:	**84.60**	MBH
Integrated Heating Capacity:	**84.60**	MBH
Heating Power Input:	**7.40**	kW
High Temperature COP:	**3.40**	
Low Temperature COP:	**2.25**	

Supply Fan

External Static Pressure:	**1.00**	in wg
Fan RPM:	**1528**	
Fan Power:	**1.28**	BHP
NOTE:	**Selected IFM RPM Range: 920 - 2000**	

Selection includes construction throwaway filter into the base fan curve. This filter is not MERV Rated.

Electrical Data

Performance Summary For ID 20

Project: Climatec - City of Esc - HARFF
Prepared By: Shawn Harlan

04/12/2025
09:23AM

Voltage Range:	**414 - 506**
Compressor #1 RLA:	**6.4**
Compressor #1 LRA:	**49**
Compressor #2 RLA:	**6.4**
Compressor #2 LRA:	**49**
Indoor Fan Motor Type:	**MED**
Indoor Fan Motor FLA (Total):	**3**
Power Supply MCA:	**19**
Power Supply MOCP (Fuse or HACR):	**25**
Disconnect Size FLA:	**20**
Disconnect Size LRA:	**106**
Electrical Convenience Outlet:	**None**
Outdoor Fan [Qty / FLA (ea)]:	**2 / 0.8**

Control Panel SCCR: 5kA RMS at Rated Symmetrical Voltage

Acoustics

Sound Power Levels, db re 10E-12 Watts

	Discharge	Inlet	Outdoor
63 Hz	87.2	83.1	89.7
125 Hz	82.9	76.8	81.5
250 Hz	75.6	70.5	80.5
500 Hz	72.7	65.1	79.2
1000 Hz	73.7	65.3	77.1
2000 Hz	69.4	59.0	73.2
4000 Hz	64.8	52.2	70.2
8000 Hz	55.8	47.0	67.4
A-Weighted	77.7	69.7	82.0

Advanced Acoustics

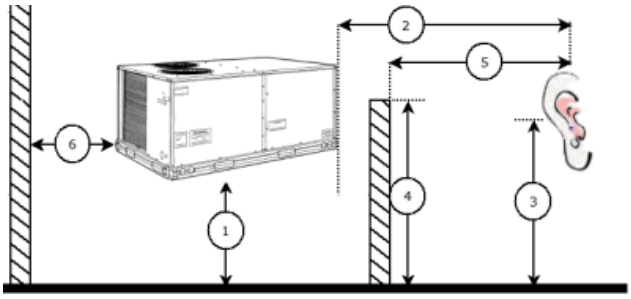

Advanced Accoustics Parameters

1. Unit height above ground:	**30.0**	ft
2. Horizontal distance from unit to receiver:	**50.0**	ft
3. Receiver height above ground:	**5.7**	ft
4. Height of obstruction:	**0.0**	ft
5. Horizontal distance from obstruction to receiver:	**0.0**	ft
6. Horizontal distance from unit to obstruction:	**0.0**	ft

Detailed Acoustics Information

Octave Band Center Freq. Hz	63	125	250	500	1k	2k	4k	8k	Overall
A	89.7	81.5	80.5	79.2	77.1	73.2	70.2	67.4	91.3 Lw

Performance Summary For ID 20

Project: Climatec - City of Esc - HARFF
Prepared By: Shawn Harlan

04/12/2025
09:23AM

B	63.5	65.4	71.9	76.0	77.1	74.4	71.2	66.3	82.0 LwA
C	57.3	49.1	48.1	46.8	44.7	40.8	37.8	35.0	58.9 Lp
D	31.1	33.0	39.5	43.6	44.7	42.0	38.8	33.9	49.6 LpA

Legend
A Sound Power Levels at Unit's Acoustic Center, Lw
B A-Weighted Sound Power Levels at Unit's Acoustic Center, LwA
C Sound Pressure Levels at Specific Distance from Unit, Lp
D A-Weighted Sound Pressure Levels at Specific Distance from Unit, LpA

Calculation methods used in this program are patterned after the ASHRAE Guide; other ASHRAE Publications and the AHRI Acoustical Standards. While a very significant effort has been made to insure the technical accuracy of this program, it is assumed that the user is knowledgeable in the art of system sound estimation and is aware of the tolerances involved in real world acoustical estimation. This program makes certain assumptions as to the dominant sound sources and sound paths which may not always be appropriate to the real system being estimated. Because of this, no assurances can be offered that this software will always generate an accurate sound prediction from user supplied input data. If in doubt about the estimation of expected sound levels in a space, an Acoustical Engineer or a person with sound prediction expertise should be consulted.

Fan Curve

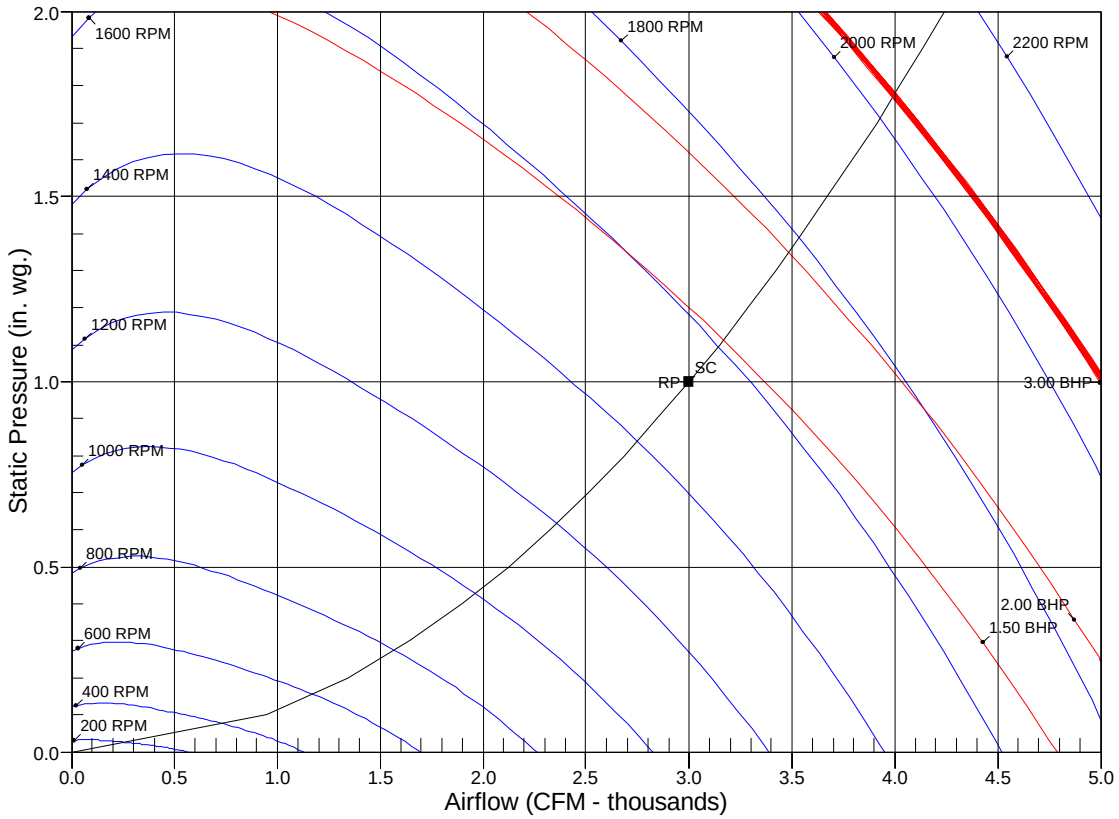

RPM = 1528 BHP = 1.28 Maximum RPM = 2200 Maximum BHP = 3.00
SC - System Curve RP - Rated Point

SUBMITTAL

Project

Climatec - City of Esc - Kit Carson Park

Date

Saturday, April 12, 2025

Shawn Harlan
Sigler - Brea
205 Puente Street
Brea CA

Table Of Contents

Project: Climatec - City of Esc - Kit Carson Park 04/12/2025
Prepared By: Shawn Harlan

ID 2 **3**
Unit Report 4
Performance Summary 5
System Parameters 5
Electrical Data 5
Acoustic Summary 6
Certified Drawing 7

ID 2

Submittal Cover Sheet
Unit Report
Performance Summary Report
Acoustic Summary
Certified Drawings

Unit Report For ID 2

Project: Climatec - City of Esc - Kit Carson Park 04/12/2025
Prepared By: Shawn Harlan

Outdoor Unit Parameters

Unit Model:	**27SCA**	
Unit Size:	**3.5 Tons (Size 42)**	
Voltage:	**208/230-1-60**	V-Ph-Hz

Indoor Coil Parameters

Unit Model:	**FT5A**	
Unit Size:	**48,000 Btuh**	
Cabinet Insulation:	**Singular, TXV**	
Voltage:	**208-1-60**	V-Ph-Hz
Refrigerant Type:	**Puron Advance**	
Heating Size:	**No Heat**	

Outdoor Unit Dimensions and Weight

Unit Length:	**31.1875**	in
Unit Width:	**31.1875**	in
Unit Height:	**32.0625**	in
Unit Shipping Weight:	**224.**	lb

Indoor Coil Dimensions and Weight

Unit Length:	**22.06**	in
Unit Width:	**21.1**	in
Unit Height:	**53.44**	in
Unit Shipping Weight:	**168.**	lb

RESIDENTIAL APPLICATIONS
This warranty is to the original purchasing owner and subsequent owners only to the extent and as stated in the Warranty Conditions and below. The limited warranty period in years, depending on the part and the claimant, is as shown in the table below.

Limited Warranty (Years)		
Item	**Original Owner**	**Subsequent Owner**
Parts	10* (or 5)	5
Compressor	10* (or 5)	5

***If properly registered within 90 days of original installation, otherwise 5 years (except in California and Quebec and other jurisdictions that prohibit warranty benefits conditioned on registration). See Warranty Conditions below.**

OTHER APPLICATIONS
The warranty period is five (5) years on the compressor, and one (1) year on all other parts. The warranty is the original owner only and is not available for subsequent owners.

Ordering Information

Part Number	Description	Quantity
Outdoor Unit		
27SCA542A003	27SCA Comfort Single Stage Heat Pump with Puron Refrigerant Advanced 3.5 Tons Cooling	1
	15 SEER @ ARI Conditions	
Indoor Coil		
FT5ANXC48L00	Performance Series Fan Coil with Puron Advance 208/230-1-60	1
	Singular, TXV	
	Aluminum	

The Product and Ratings Data in this program is subject to change at any time and without notice. Please refer to the latest product literature and the AHRI directory at www.ahridirectory.org for the most up-to-date information.

Performance Summary For ID 2

Project: Climatec - City of Esc - Kit Carson Park 04/12/2025
Prepared By: Shawn Harlan

System Performance

System:	**27SCA/FT5A**	
System Quantity:	**1**	
Altitude:	**1.0**	ft
Linear Pipe Length:	**0.0**	ft
COP @ 47 F:	**3.92**	
COP @ 17 F:	**2.70**	
SEER @ ARI Conditions:	**15.0**	
EER @ ARI Conditions:	**12.0**	
HSPF @ ARI Conditions:	**7.5**	

Actual Clg Airflow:	**1400.1**	CFM
Standard Clg Airflow:	**1400.0**	CFM
Total Net Clg Capacity:	**41.14**	MBH
Net Sensible Clg Capacity:	**31.68**	MBH
Htg HP Capacity:	**42.66**	MBH
Htg HP Integrated Capacity:	**42.66**	MBH
Heating HP Compressor Power:	**3.13**	kW
Total System Power:	**4.14**	kW

System Parameters

Outdoor Unit Parameters

Unit Model:	**27SCA542A003**	
Unit Size (Nominal):	**3.5 Tons (Size 42)**	
Voltage:	**208/230-1-60**	V-Ph-Hz
Clg Ent Air DB Ambient:	**95.0**	°F
Htg Ent Air DB Ambient:	**47.0**	°F

Indoor Coil Parameters

Unit Model:	**FT5ANXC48L00**	
Unit Size (Nominal):	**48,000 Btuh**	
Voltage:	**208-1-60**	V-Ph-Hz
Ent Air DB:	**80.00**	°F
Ent Air WB:	**67.00**	°F
Ent Enthalpy:	**31.44**	BTU/lb
Lvg Air DB:	**59.05**	°F
Lvg Air WB:	**57.81**	°F
Lvg Enthalpy:	**24.91**	BTU/lb
Htg Ent Air DB:	**70.0**	°F
Htg Lvg Air DB:	**98.2**	°F
Heating Size (Nominal):	**No Heat**	
Total External Static Pressure:	**0.50**	in wg

Electrical Data

Outdoor Electrical Data

Unit Voltage:	**208/230-1-60**	V-Ph-Hz
Fan Motor FLA:	**1.05**	Amps
MCA:	**24.9**	Amps
Max Fuse:	**40**	Amps
Operating Range Min:	**197**	V
Operating Range Max:	**253**	V
Compressor RLA:	**19.0**	Amps
Compressor LRA:	**123.0**	Amps

Indoor Electrical Data:

(For units with no factory installed electric heaters)

Unit Voltage:	**208-1-60**	V-Ph-Hz
Unit FLA:	**5.7**	Amps
Unit MCA:	**7.1**	Amps
Unit MOCP:	**15.0**	Amps
Unit Min Wire Size:	**14.0**	
Unit Fuse/Ckt Bkr Amps:	**15.0**	Amps
Motor HP:	**3/4**	HP

Notice: Indoor Elect. data is for 208-1-60 voltage

The Product and Ratings Data in this program is subject to change at any time and without notice. Please refer to the latest product literature and the AHRI directory at www.ahridirectory.org for the most up-to-date information.

Acoustic Summary For ID 2

Project: Climatec - City of Esc - Kit Carson Park 04/12/2025
Prepared By: Shawn Harlan

Outdoor Unit Parameters:

Unit Model: **27SCA**
Unit Size: **3.5 Tons (Size 42)**
Variations: **Standard**

Octave Band Center Frequency, Hz	125	250	500	1k	2k	4k	8k	dBA
Sound Power,dB	70.2	71.3	71.2	72.1	64.9	62.7	59.5	
A-Weighted Sound Power, dBA								76.0

Indoor Coil Parameters:

Unit Model: **FT5A**
Unit Size: **48,000 Btuh**
Cabinet Insulation: **Singular, TXV**

Octave Band Center Frequency, Hz	63	125	250	500	1k	2k	4k
Sound Power,dB	69.0	65.0	61.0	58.0	56.0	54.0	50.0

The Product and Ratings Data in this program is subject to change at any time and without notice. Please refer to the latest product literature and the AHRI directory at www.ahridirectory.org for the most up-to-date information.

Certified Drawing For ID 2

Project: Climatec - City of Esc - Kit Carson Park
Prepared By: Shawn Harlan

04/12/2025

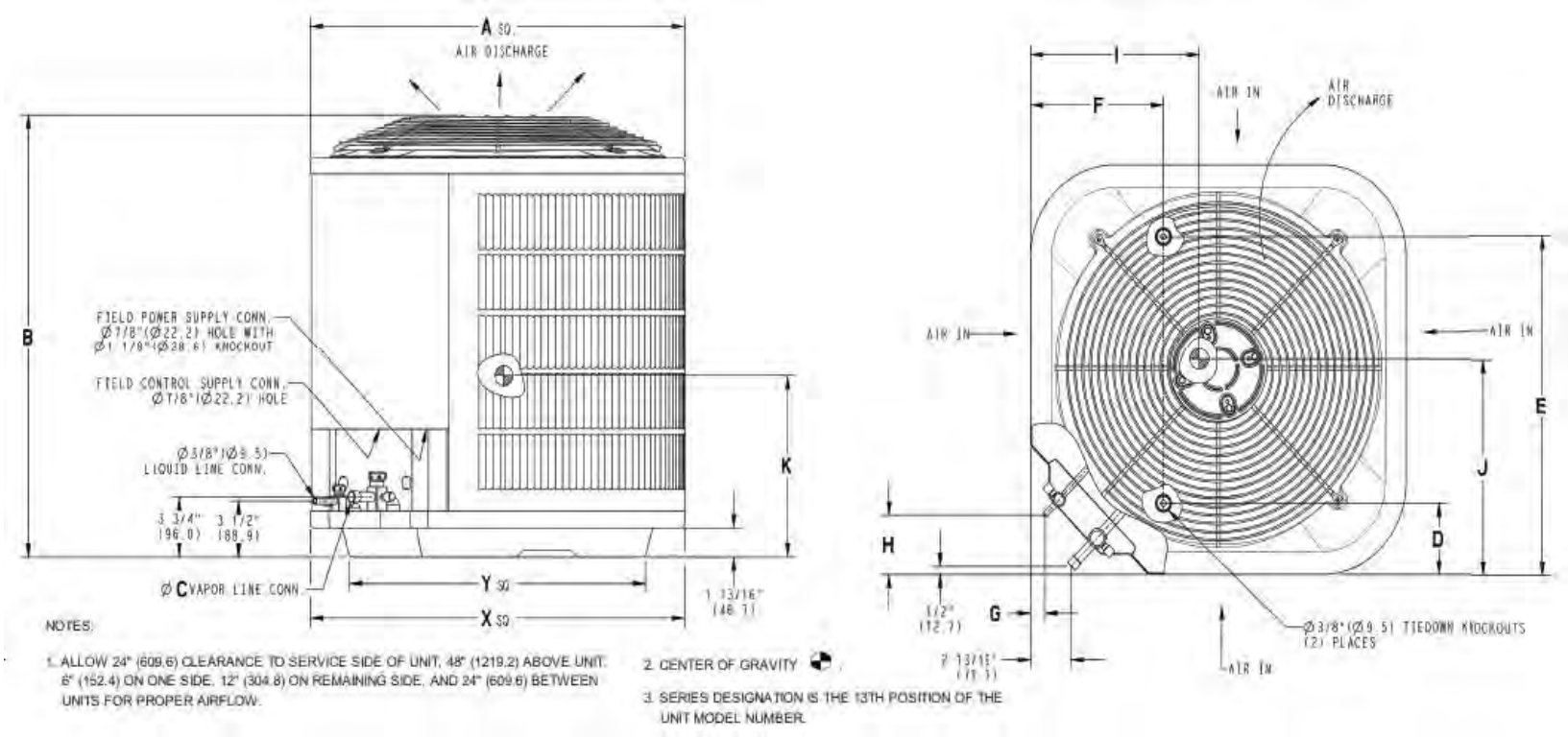

Outdoor Model

Unit Model:	**27SCA**	
Unit Size:	**3.5 Tons (Size 42)**	
Voltage:	**208/230-1-60**	V-Ph-Hz
SEER:	**15**	
PartNumber:	**27SCA542A003**	

Shipping Dimensions and Weights	Outdoor Unit
Height	36.44 in
Width	34.25 in
Length	34.25 in
Operating Weight	204. lb
Shipping Weight	224. lb

Dimensions										
A	B	C	D	E	F	G	H	I	J	K
31.19 in	32.06 in	0.88 in	6.56 in	24.69 in	9.13 in	1.13 in	3.81 in	13.50 in	14.25 in	15.00 in

The Product and Ratings Data in this program is subject to change at any time and without notice. Please refer to the latest product literature and the AHRI directory at www.ahridirectory.org for the most up-to-date information.

Certified Drawing For ID 2

Project: Climatec - City of Esc - Kit Carson Park
Prepared By: Shawn Harlan

04/12/2025

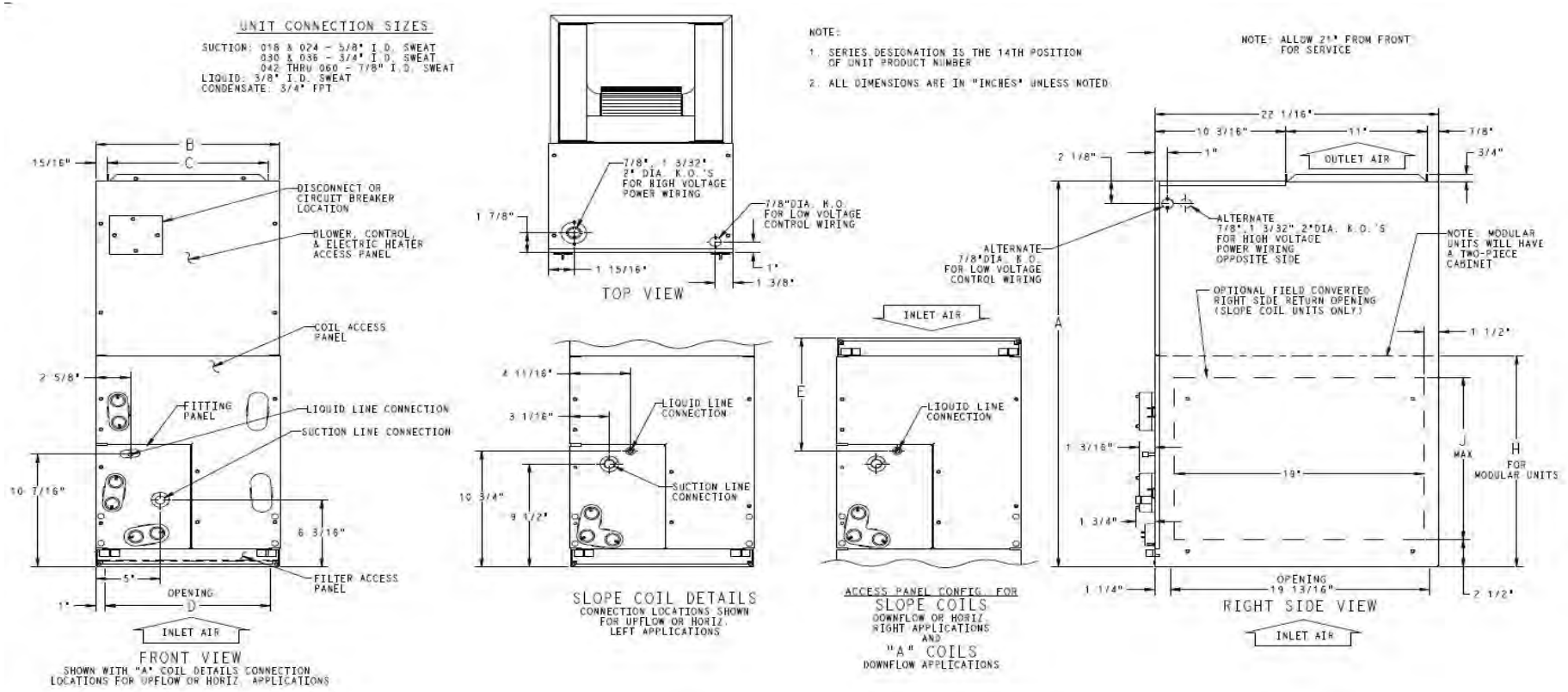

Indoor Coil

Unit Model: **FT5A**
Unit Size: **48,000 Btuh**
Voltage: **208-1-60** V-Ph-Hz
Cabinet Insulation: **Singular, TXV**
PartNumber: **FT5ANXC48L00**

Dimensions and Weights	Indoor Coil
Height	53.44 in
Width	21.13 in
Length	22.06 in
Shipping Weight	168. lb

Dimensions								
A	B	C	D	E	F	G	H	J
53.44 in	21.13 in	19.25 in	19.13 in	19.50 in	27.25 in	26.94 in	--	--

The Product and Ratings Data in this program is subject to change at any time and without notice. Please refer to the latest product literature and the AHRI directory at www.ahridirectory.org for the most up-to-date information.

Certified Drawing For ID 2

Project: Climatec - City of Esc - Kit Carson Park
Prepared By: Shawn Harlan

04/12/2025

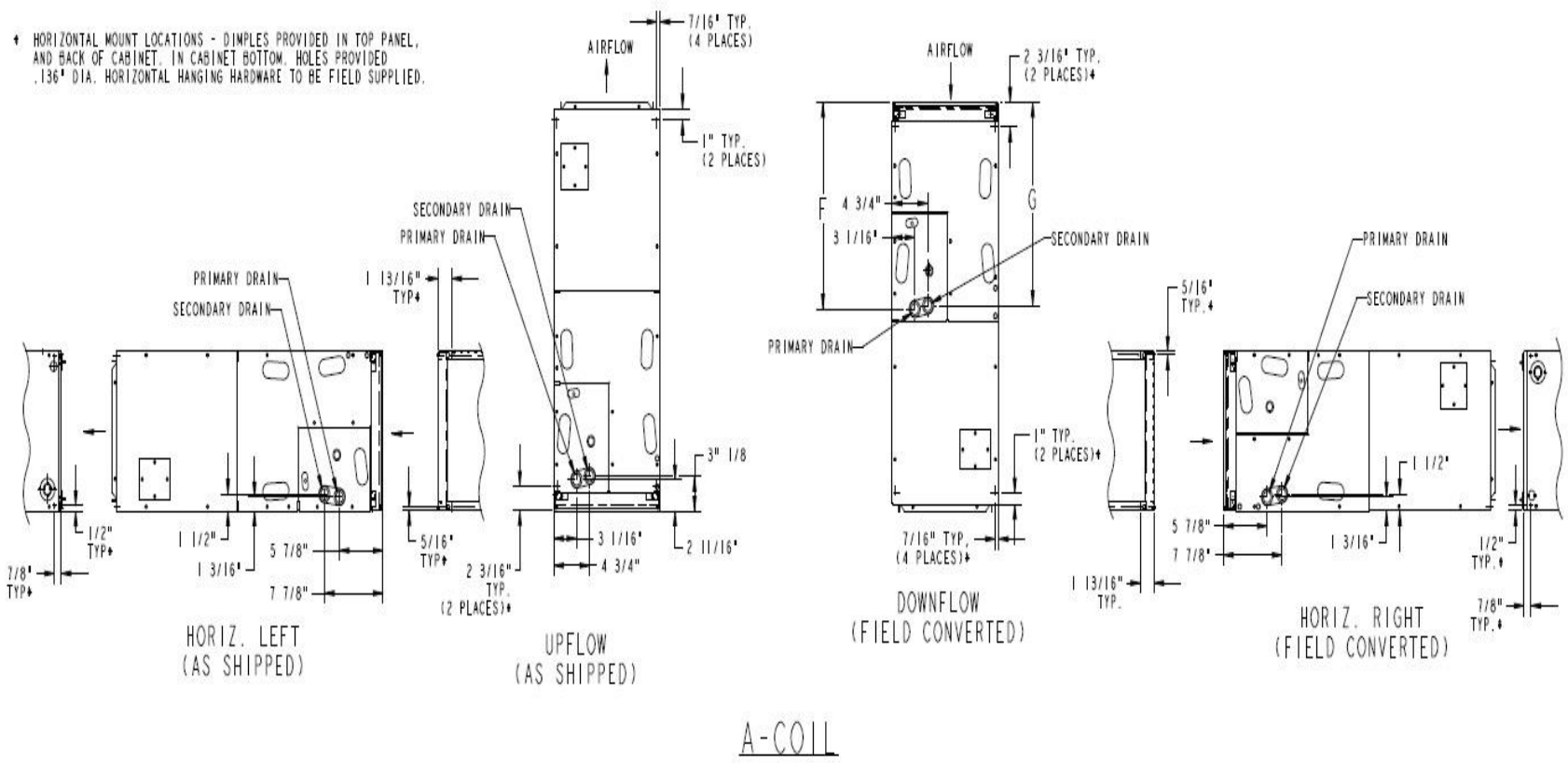

A-COIL

Indoor Coil

Unit Model:	**FT5A**	
Unit Size:	**48,000 Btuh**	
Voltage:	**208-1-60**	V-Ph-Hz
PartNumber:	**FT5ANXC48L00**	

The Product and Ratings Data in this program is subject to change at any time and without notice. Please refer to the latest product literature and the AHRI directory at www.ahridirectory.org for the most up-to-date information.

SUBMITTAL

Project

Climatec - City of Esc - Mathes CC

Date

Saturday, April 12, 2025

Shawn Harlan
Sigler - Brea
205 Puente Street
Brea CA

Table Of Contents

Project: Climatec - City of Esc - Mathes CC
Prepared By: Shawn Harlan

04/12/2025
08:55AM

ID 2 ..... **3**
Unit Report 4
Certified Drawing 5
Performance Summary 6
ID 3,5 ..... **9**
Unit Report 10
Certified Drawing 11
Performance Summary 14
ID 4, 6-9 ..... **17**
Unit Report 18
Certified Drawing 19
Performance Summary 22

ID 2

Tag Cover Sheet
Unit Report
Certified Drawing
Performance Report

Unit Report For ID 2

Project: Climatec - City of Esc - Mathes CC
Prepared By: Shawn Harlan

04/12/2025
08:55AM

Unit Parameters

Unit Model: **50NT-B24---3**
Unit Size: **24 (2 Tons)**
Volts-Phase-Hertz: **208-1-60**
Heating Type: **Heat Pump**
Refrigerant: **R-454B**
Duct Cfg: **Vertical/Vertical**

Dimensions (ft. in.) & Weight (lb.) ***

Unit Length: **4' 0.1875"**
Unit Width: **2' 8.625"**
Unit Height: **4' 3.75"**

*** Weights and Dimensions are approximate. Weight does not include roof curbs, unit packaging, field installed accessories or factory installed options. Approximate dimensions are provided primarily for shipping purposes. For exact dimensions and weights, refer to appropriate product data catalog.

Base Unit Weight (Does not include any accessories):
338 lb

Warranty Information

1 year warranty on parts
5 yearwarranty on compressor

No optional warranties were selected.

NOTE: Please see Warranty Catalog 500-089 for explanation of policies and ordering methods.

Ordering Information

Part Number	Description	Quantity
50NT-B24---3	Rooftop Unit	1

Certified Drawing for ID 2

Project: Climatec - City of Esc - Mathes CC
Prepared By: Shawn Harlan

04/12/2025
08:55AM

CARRIER / BRYANT HP (SMALL CHASSIS)

COOLING CAPACITY	UNIT WT.		UNIT HEIGHT IN/MM		CENTER OF GRAVITY IN/MM					
	LB	KG	"A"		X		Y		Z	
24	338	153.3	51-3/4	1315	20-1/2	520.7	15-1/2	394	16-5/8	422.3
30	373	169.2	51-3/4	1315	20-1/2	520.7	15-1/2	394	16-5/8	422.3

UNIT	CORNER WEIGHT LB/KG							
	"1"		"2"		"3"		"4"	
24	86.3	39.2	76.2	34.6	82.7	37.5	92.8	42.1
30	95.3	43.2	83.9	38.1	91.2	41.4	102.6	46.5

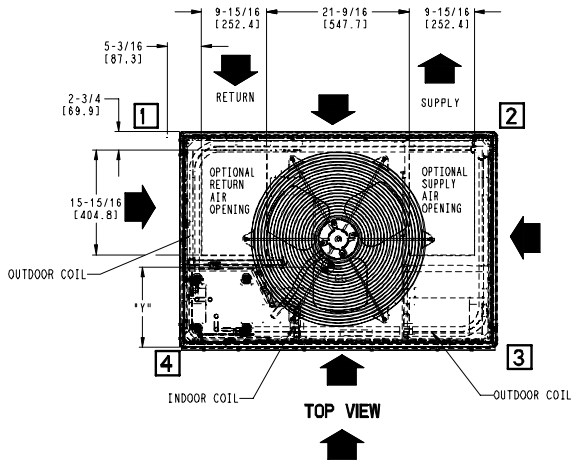

TOP VIEW

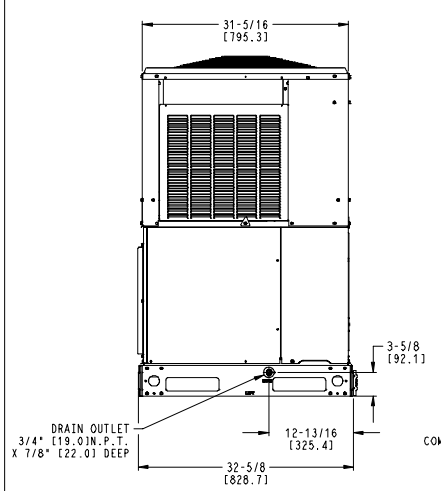

LEFT SIDE VIEW

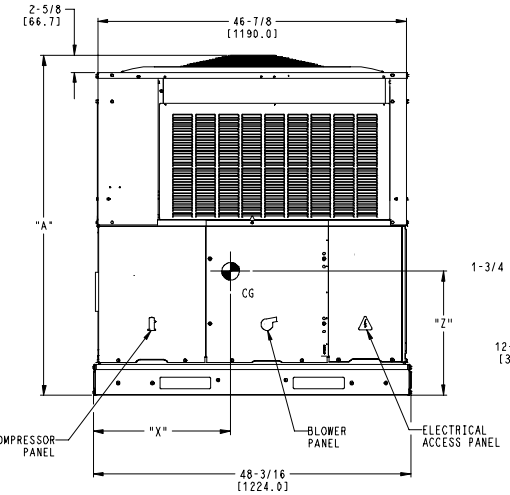

FRONT VIEW

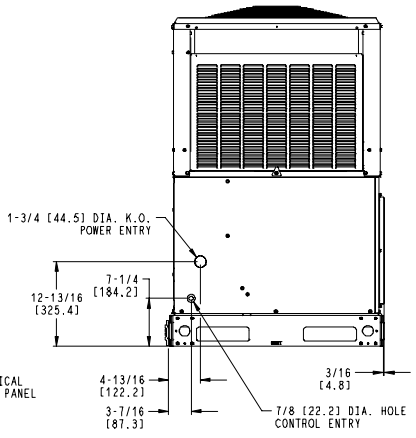

RIGHT SIDE VIEW

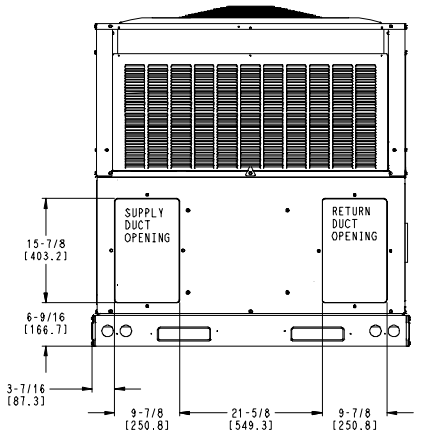

REAR VIEW

REQUIRED CLEARANCES TO COMBUSTIBLE MATL

	INCHES [MM]
TOP OF UNIT	14 [355.6]
DUCT SIDE OF UNIT	2 [50.8]
SIDE OPPOSITE DUCTS	14 [355.6]
BOTTOM OF UNIT	0 [0.0]
ELECTRICAL PANEL	36 [914.4]

NEC. REQUIRED CLEARANCES.

	INCHES [MM]
BETWEEN UNITS, POWER ENTRY SIDE	42 [1066.8]
UNIT AND UNGROUNDED SURFACES, POWER ENTRY SIDE	36 [914.0]
UNIT AND BLOCK OR CONCRETE WALLS AND OTHER GROUNDED SURFACES, POWER ENTRY SIDE	42 [1066.8]

REQUIRED CLEARANCE FOR OPERATION AND SERVICING

	INCHES [MM]
EVAP. COIL ACCESS SIDE	36 [914.0]
POWER ENTRY SIDE	42 [1066.8]
(EXCEPT FOR NEC REQUIREMENTS)	
UNIT TOP	48 [1219.2]
SIDE OPPOSITE DUCTS	36 [914.0]
DUCT PANEL	12 [304.8]*

*MINIMUM DISTANCES: IF UNIT IS PLACED LESS THAN 12 [304.8] FROM WALL SYSTEM, THEN SYSTEM PERFORMANCE MAYBE COMPROMISED.

DIMENSIONS IN [] ARE IN MILLIMETERS

U.S. EXPORT CLASSIFICATION: NOT SUBJECT TO REGULATION (N.S.R)

12/05/23	UPDATED REAR VIEW	SINGLE ZONE ELECTRIC COOLING & HEAT(SM)	SD5986-4	-

Performance Summary For ID 2

Project: Climatec - City of Esc - Mathes CC
Prepared By: Shawn Harlan

04/12/2025
08:55AM

Part Number:50NT-B24---3

Refrigerant:	**R-454B**	
ARI SEER2:	**13.40**	
Application EER (Rooftop Unit only):	**0.00**	

Base Unit Dimensions

Unit Length:	**48.2**	in
Unit Width:	**32.6**	in
Unit Height:	**51.8**	in
Base Unit Weight (Does not include any accessories):	**338**	lb

Unit

Unit Voltage-Phase-Hertz:	**208-1-60**	
Air Discharge:	**Vertical**	
Fan Drive Type:	**Direct**	
Actual Airflow:	**828**	CFM
Site Altitude:	**0**	ft

Cooling Performance

Condenser Entering Air DB:	**95.0**	F
Evaporator Entering Air DB:	**80.0**	F
Evaporator Entering Air WB:	**67.0**	F
Entering Air Enthalpy:	**31.44**	BTU/lb
Evaporator Leaving Air DB:	**59.8**	F
Evaporator Leaving Air WB:	**58.3**	F
Evaporator Leaving Air Enthalpy:	**25.21**	BTU/lb
Unit Discharge Air DB:	**0.0**	F
Unit Discharge Air WB:	**0.0**	F
Unit Discharge Air Enthalpy:	**0.00**	BTU/lb
Net Cooling Capacity:	**23.20**	MBH
Net Sensible Capacity:	**18.05**	MBH
Total Unit Power Input:	**1.95**	kW
Coil Bypass Factor:	**0.000**	

Heating Performance

Outdoor Ambient Temperature:	**47.0**	F
Entering Air Indoor Coil DB:	**70.0**	F
Leaving Air Indoor Coil DB:	**96.3**	F
Total Heating Capacity:	**23.50**	MBH
Integrated Heating Capacity:	**23.50**	MBH
Heating Power Input:	**1.88**	kW
High Temperature COP:	**3.80**	
Low Temperature COP:	**2.20**	
HSPF2:	**6.7**	

Supply Fan

External Static Pressure:	**0.50**	in wg
Options / Accessories Static Pressure		
Wet Coil:	**0.04**	in wg
Application External Static (ESP + Unit Opts/Acc.):	**0.54**	in wg
Fan Power:	**0.22**	BHP
Fan Motor Size, hp:	**1/2**	
NOTE:	**Medium Motor Speed, Vert**	

Selection includes construction throwaway filter into the base fan curve. This filter is not MERV Rated.

Electrical Data

Minimum Voltage:	**197**
Maximum Voltage:	**253**

Performance Summary For ID 2

Project: Climatec - City of Esc - Mathes CC
Prepared By: Shawn Harlan

04/12/2025
08:55AM

Compressor RLA: **11.8**
Compressor LRA: **63**
Outdoor Fan FLA (ea): **0.71**
Indoor Fan Motor FLA (Total): **3.9**
Power Supply MCA: **18.9**
Power Supply MOCP (Fuse or HACR): **30**

Control Panel SCCR: 5kA RMS at Rated Symmetrical Voltage

Acoustics

Sound Rating: **69.9** db
Sound Power Levels, db re 10E-12 Watts

	Discharge	Inlet	Outdoor
63 Hz	NA	NA	NA
125 Hz	NA	NA	59.0
250 Hz	NA	NA	56.6
500 Hz	NA	NA	57.9
1000 Hz	NA	NA	60.9
2000 Hz	NA	NA	55.3
4000 Hz	NA	NA	51.7
8000 Hz	NA	NA	44.0

Advanced Acoustics

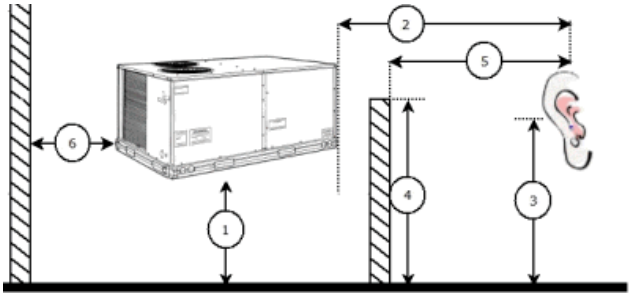

Advanced Accoustics Parameters

1. Unit height above ground: **30.0** ft
2. Horizontal distance from unit to receiver: **50.0** ft
3. Receiver height above ground: **5.7** ft
4. Height of obstruction: **0.0** ft
5. Horizontal distance from obstruction to receiver: **0.0** ft
6. Horizontal distance from unit to obstruction: **0.0** ft

Detailed Acoustics Information

Octave Band Center Freq. Hz	63	125	250	500	1k	2k	4k	8k	Overall
A	0.0	59.0	56.6	57.9	60.9	55.3	51.7	44.0	65.6 Lw
B	-26.2	42.9	48.0	54.7	60.9	56.5	52.7	42.9	63.5 LwA
C	0.0	26.6	24.2	25.5	28.5	22.9	19.3	11.6	33.2 Lp
D	-26.2	10.5	15.6	22.3	28.5	24.1	20.3	10.5	31.1 LpA

Legend

Performance Summary For ID 2

Project: Climatec - City of Esc - Mathes CC
Prepared By: Shawn Harlan

04/12/2025
08:55AM

A Sound Power Levels at Unit's Acoustic Center, Lw
B A-Weighted Sound Power Levels at Unit's Acoustic Center, LwA
C Sound Pressure Levels at Specific Distance from Unit, Lp
D A-Weighted Sound Pressure Levels at Specific Distance from Unit, LpA

Calculation methods used in this program are patterned after the ASHRAE Guide; other ASHRAE Publications and the AHRI Acoustical Standards. While a very significant effort has been made to insure the technical accuracy of this program, it is assumed that the user is knowledgeable in the art of system sound estimation and is aware of the tolerances involved in real world acoustical estimation. This program makes certain assumptions as to the dominant sound sources and sound paths which may not always be appropriate to the real system being estimated. Because of this, no assurances can be offered that this software will always generate an accurate sound prediction from user supplied input data. If in doubt about the estimation of expected sound levels in a space, an Acoustical Engineer or a person with sound prediction expertise should be consulted.

ID 3,5

Tag Cover Sheet
Unit Report
Certified Drawing
Performance Report

Unit Report For ID 3,5

Project: Climatec - City of Esc - Mathes CC
Prepared By: Shawn Harlan

04/12/2025
08:55AM

Unit Parameters

Unit Model: **50GEQM04A2M5-0A0A0**
Unit Size: **04 (3 Tons)**
Volts-Phase-Hertz: **208-3-60**
Heating Type: **Heat Pump**
Refrigerant: **R-454B**
Heat Control: **Two Stage Cooling, Single Circuit**
Duct Cfg: **Vertical Supply / Vertical Return**

Dimensions (ft. in.) & Weight (lb.) ***

Unit Length: **6' 2.375"**
Unit Width: **3' 10.625"**
Unit Height: **3' 5.375"**
Total Operating Weight: **580** lb

*** Weights and Dimensions are approximate. Weight does not include unit packaging. Approximate dimensions are provided primarily for shipping purposes. For exact dimensions and weights, refer to appropriate product data catalog.

Lines and Filters

Return Air Filter Type: **Throwaway**
Return Air Filter Quantity: **2**
Return Air Filter Size: **16 x 25 x 2**

Selection includes construction throwaway filter into the base fan curve.

Unit Configuration

Standard/Medium Static - EcoBlue Vane Axial Fan
Al/Cu - Al/Cu - Louvered Hail Guards
Standard Electromechanical Controls (can be used with field installed economizers and dampers)
Standard

Warranty Information

5-Year compressor parts (STD.)
1-Year parts (STD.)

No optional warranties were selected.

NOTE: Please see Warranty Catalog 500-089 for explanation of policies and ordering methods.

Ordering Information

Part Number	Description	Quantity
50GEQM04A2M5-0A0A0	Rooftop Unit	1

Certified Drawing for ID 3,5

Project: Climatec - City of Esc - Mathes CC
Prepared By: Shawn Harlan

04/12/2025
08:55AM

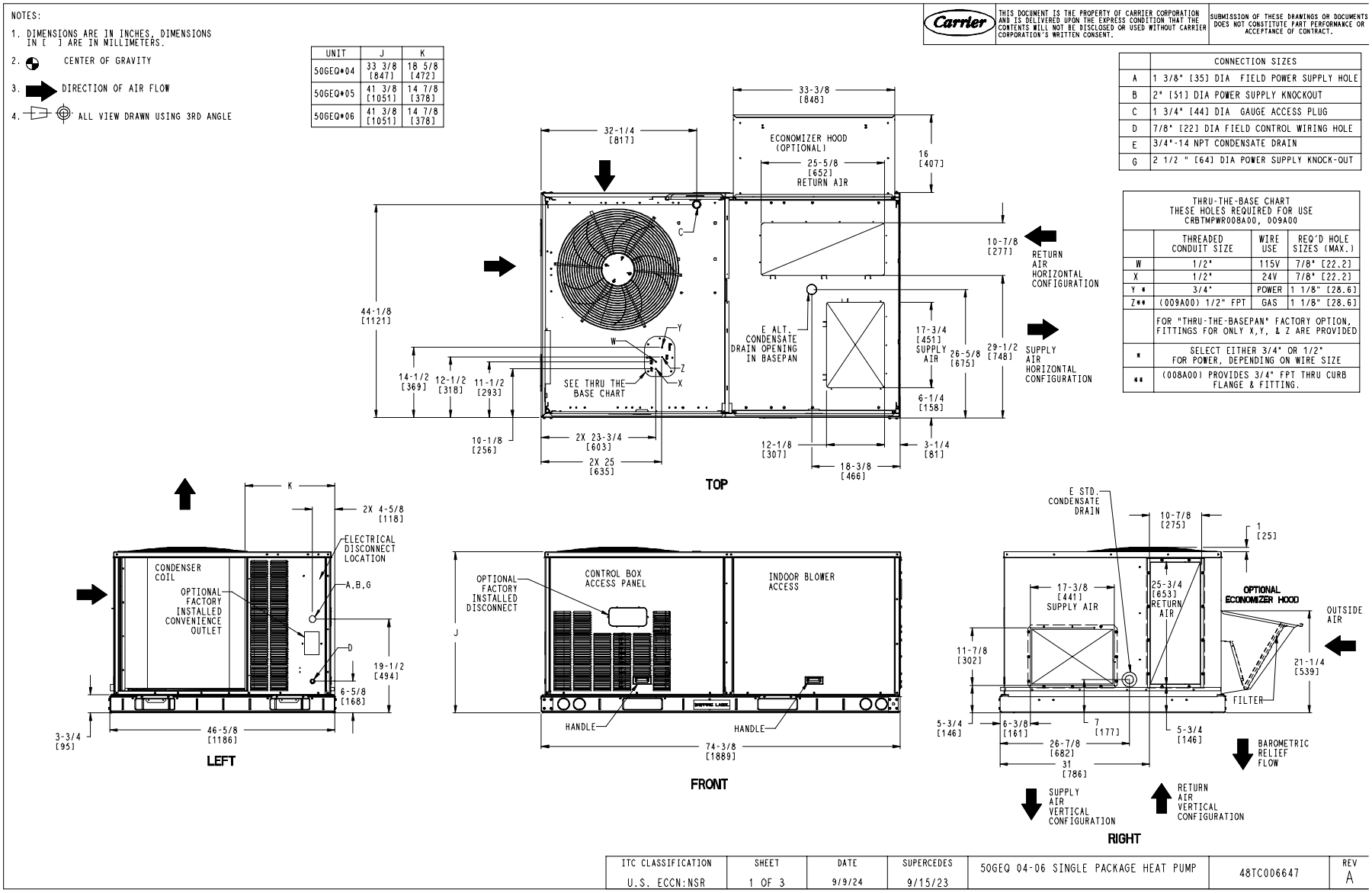

Certified Drawing for ID 3,5

Project: Climatec - City of Esc - Mathes CC
Prepared By: Shawn Harlan

04/12/2025
08:55AM

UNIT	STD. UNIT WEIGHT *		CORNER WEIGHT (A)		CORNER WEIGHT (B)		CORNER WEIGHT (C)		CORNER WEIGHT (D)		C.G.		HEIGHT
	LBS.	KG.	LBS.	KG.	LBS.	KG.	LBS.	KG.	LBS.	KG.	X	Y	Z
50GEQ*04	475	215	128	58	120	54	110	50	117	53	36 [914]	22 3/8 [568]	16 1/8 [410]
50GEQ*05	594	269	163	74	148	67	135	61	149	68	35 3/8 [898]	22 5/16 [557]	16 1/2 [419]
50GEQ*06	596	270	163	74	148	67	135	61	149	68	35 3/8 [898]	22 5/16 [557]	16 1/2 [419]

*- STANDARD UNIT WEIGHT IS WITHOUT ELECTRIC HEAT AND WITHOUT PACKAGING.
FOR OTHER OPTIONS AND ACCESSORIES REFER TO THE PRODUCT DATA CATALOG.

Carrier
THIS DOCUMENT IS THE PROPERTY OF CARRIER CORPORATION AND IS DELIVERED UPON THE EXPRESS CONDITION THAT THE CONTENTS WILL NOT BE DISCLOSED OR USED WITHOUT CARRIER CORPORATION'S WRITTEN CONSENT.
SUBMISSION OF THESE DRAWINGS OR DOCUMENTS DOES NOT CONSTITUTE PART PERFORMANCE OR ACCEPTANCE OF CONTRACT.

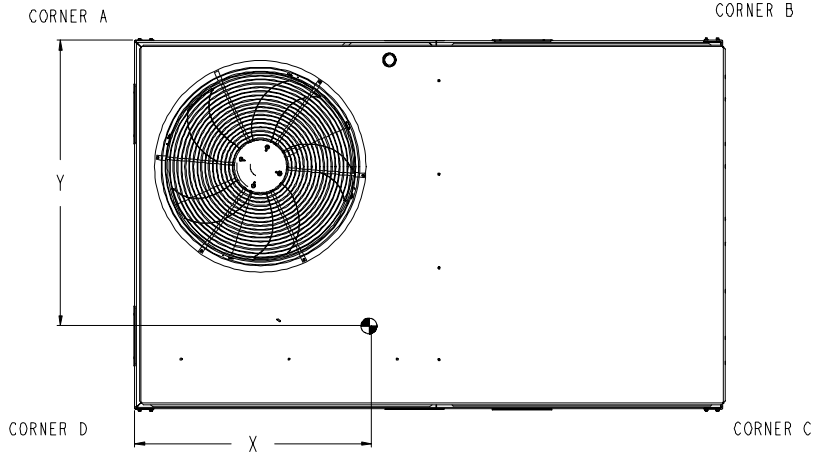

TOP

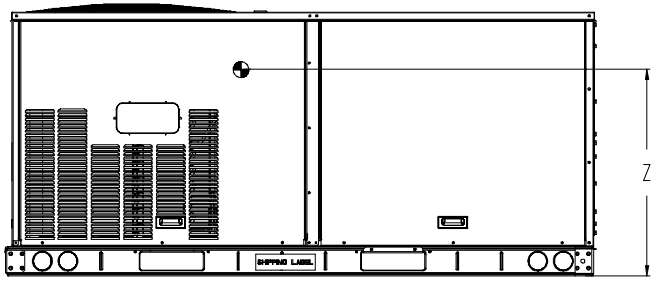

FRONT

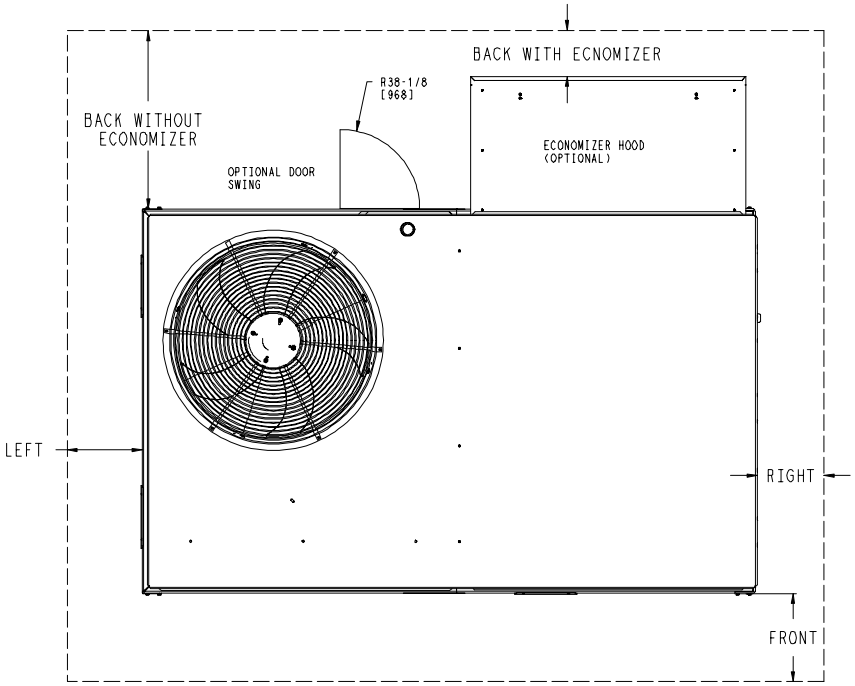

NOTE:

1. FOR ALL MINIMUM CLEARANCES LOCAL CODES OR JURISDICTIONS MAY PREVAIL.

CLEARANCE			
	SERVICE WITH:	SERVICE WITH:	OPERATING
SURFACE	CONDUCTIVE BARRIER	NONCONDUCTIVE BARRIER	CLEARANCE
FRONT	48 [1219mm]	36 [914mm]	18 [457mm]
LEFT	48 [1219mm]	42 [1067mm]	18 [457mm]
BACK W/O ECON	48 [1219mm]	42 [1067mm]	18 [457mm]
BACK W/ECON	36 [914mm]	36 [914mm]	18 [457mm]
RIGHT	36 [914mm]	36 [914mm]	18 [457mm]
TOP	72 [1829mm]	72 [1829mm]	72 [1829mm]

ITC CLASSIFICATION	SHEET	DATE	SUPERCEDES			REV
U.S. ECCN:NSR	2 OF 3	9/9/24	9/15/23	50GEQ 04-06 SINGLE PACKAGE HEAT PUMP	48TC006647	A

Carrier | THIS DOCUMENT IS THE PROPERTY OF CARRIER CORPORATION AND IS DELIVERED UPON THE EXPRESS CONDITION THAT THE CONTENTS WILL NOT BE DISCLOSED OR USED WITHOUT CARRIER CORPORATION'S WRITTEN CONSENT. | SUBMISSION OF THESE DRAWINGS OR DOCUMENTS DOES NOT CONSTITUTE PART PERFORMANCE OR ACCEPTANCE OF CONTRACT.

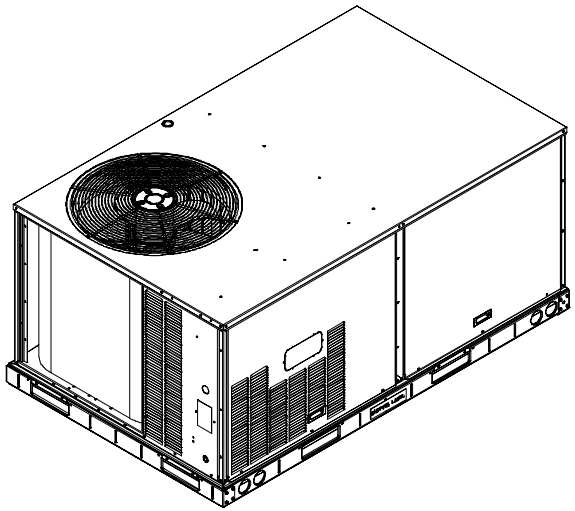

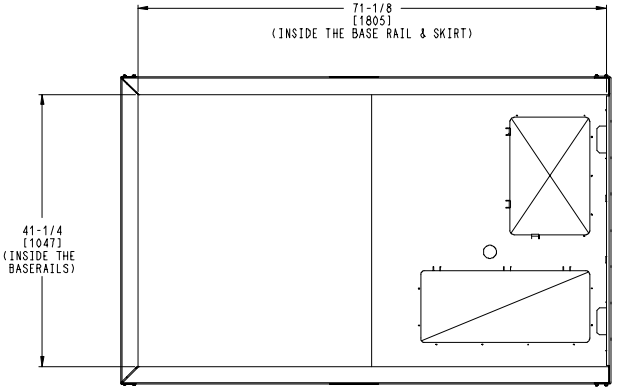

INSIDE BASERAIL DIMENSIONS
BOTTOM

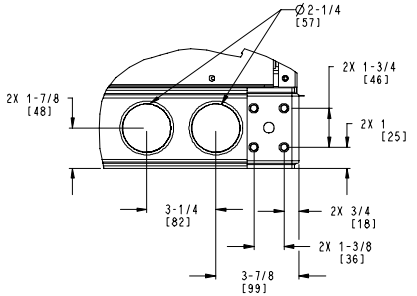

DETAIL **C**
TYP 4 PLCS

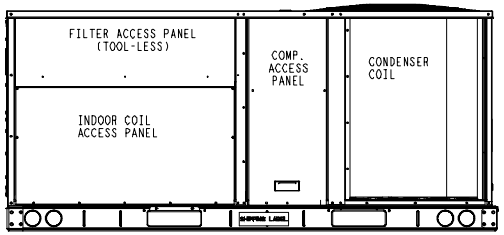

BACK

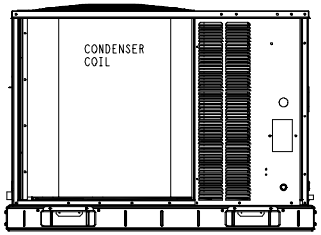

LEFT

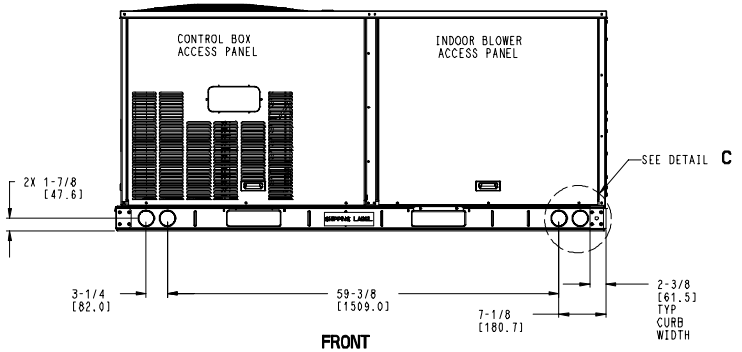

FRONT

ITC CLASSIFICATION	SHEET	DATE	SUPERCEDES			REV
U.S. ECCN:NSR	3 OF 3	9/9/24	9/15/23	50GEQ 04-06 SINGLE PACKAGE HEAT PUMP	48TC006647	A

Performance Summary For ID 3,5

Project: Climatec - City of Esc - Mathes CC
Prepared By: Shawn Harlan

04/12/2025
08:55AM

Part Number:50GEQM04A2M5-0A0A0

Refrigerant:	**R-454B**	
ARI SEER:	**17.00**	
ARI SEER2:	**16.00**	
Application EER (Rooftop Unit only):	**11.89**	

Base Unit Dimensions

Unit Length:	**74.4**	in
Unit Width:	**46.6**	in
Unit Height:	**41.4**	in

Operating Weight

Base Unit Weight:	**567**	lb
Al/Cu - Al/Cu - Louvered Hail Guards:	**13**	lb
Total Operating Weight:	**580**	lb

Unit

Unit Voltage-Phase-Hertz:	**208-3-60**	
Air Discharge:	**Vertical**	
Fan Drive Type:	**Direct Drive**	
Actual Airflow:	**1200**	CFM
Site Altitude:	**0**	ft

Cooling Performance

Condenser Entering Air DB:	**95.0**	F
Evaporator Entering Air DB:	**80.0**	F
Evaporator Entering Air WB:	**67.0**	F
Entering Air Enthalpy:	**31.44**	BTU/lb
Evaporator Leaving Air DB:	**58.5**	F
Evaporator Leaving Air WB:	**57.2**	F
Evaporator Leaving Air Enthalpy:	**24.52**	BTU/lb
Unit Discharge Air DB:	**59.7**	F
Unit Discharge Air WB:	**57.7**	F
Unit Discharge Air Enthalpy:	**24.81**	BTU/lb
Gross Cooling Capacity:	**37.36**	MBH
Net Cooling Capacity:	**35.79**	MBH
Gross Sensible Capacity:	**27.90**	MBH
Net Sensible Capacity:	**26.33**	MBH
Compressor Power Input:	**2.37**	kW
Coil Bypass Factor:	**0.027**	

Heating Performance

Outdoor Ambient Temperature:	**47.0**	F
Entering Air Indoor Coil DB:	**70.0**	F
Leaving Air Indoor Coil DB:	**96.1**	F
Total Heating Capacity:	**33.80**	MBH
Integrated Heating Capacity:	**33.80**	MBH
Heating Power Input:	**2.60**	kW
High Temperature COP:	**3.90**	
Low Temperature COP:	**2.40**	
HSPF:	**8.0**	
High Temperature COP2:	**3.90**	
Low Temperature COP2:	**2.40**	
HSPF2:	**6.7**	

Supply Fan

External Static Pressure:	**1.00**	in wg
Fan RPM:	**1946**	
Fan Power:	**0.54**	BHP

Performance Summary For ID 3,5

Project: Climatec - City of Esc - Mathes CC
Prepared By: Shawn Harlan

04/12/2025
08:55AM

NOTE: **Selected IFM RPM Range: 1058 - 2190**

Selection includes construction throwaway filter into the base fan curve. This filter is not MERV Rated.

Electrical Data

Voltage Range:	**187 - 253**
Compressor #1 RLA:	**11.2**
Compressor #1 LRA:	**82**
Indoor Fan Motor Type:	**MED**
Indoor Fan Motor FLA (Total):	**5.1**
Power Supply MCA:	**22**
Power Supply MOCP (Fuse or HACR):	**30**
Disconnect Size FLA:	**22**
Disconnect Size LRA:	**93**
Electrical Convenience Outlet:	**None**
Outdoor Fan [Qty / FLA (ea)]:	**1 / 2.6**

Control Panel SCCR: 5kA RMS at Rated Symmetrical Voltage

Acoustics

Sound Power Levels, db re 10E-12 Watts

	Discharge	Inlet	Outdoor
63 Hz	92.4	86.1	85.6
125 Hz	83.6	79.2	84.7
250 Hz	76.5	70.0	80.5
500 Hz	69.1	62.8	76.0
1000 Hz	66.5	64.1	72.4
2000 Hz	63.5	55.8	68.0
4000 Hz	59.4	50.0	62.8
8000 Hz	57.1	43.3	59.3
A-Weighted	74.6	69.3	79.0

Advanced Acoustics

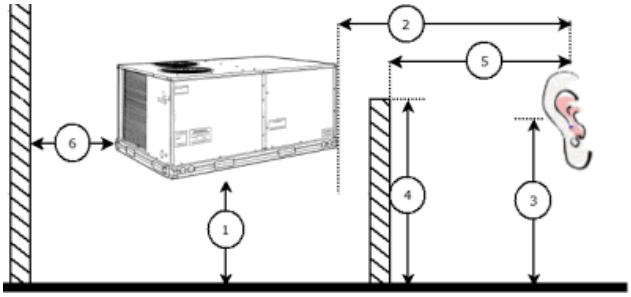

Advanced Accoustics Parameters

1. Unit height above ground:	**30.0**	ft
2. Horizontal distance from unit to receiver:	**50.0**	ft
3. Receiver height above ground:	**5.7**	ft
4. Height of obstruction:	**0.0**	ft
5. Horizontal distance from obstruction to receiver:	**0.0**	ft
6. Horizontal distance from unit to obstruction:	**0.0**	ft

Detailed Acoustics Information

Performance Summary For ID 3,5

Project: Climatec - City of Esc - Mathes CC
Prepared By: Shawn Harlan

04/12/2025
08:55AM

Octave Band Center Freq. Hz	63	125	250	500	1k	2k	4k	8k	Overall
A	85.6	84.7	80.5	76.0	72.4	68.0	62.8	59.3	89.2 Lw
B	59.4	68.6	71.9	72.8	72.4	69.2	63.8	58.2	78.5 LwA
C	53.2	52.3	48.1	43.6	40.0	35.6	30.4	26.9	56.8 Lp
D	27.0	36.2	39.5	40.4	40.0	36.8	31.4	25.8	46.1 LpA

Legend
A Sound Power Levels at Unit's Acoustic Center, Lw
B A-Weighted Sound Power Levels at Unit's Acoustic Center, LwA
C Sound Pressure Levels at Specific Distance from Unit, Lp
D A-Weighted Sound Pressure Levels at Specific Distance from Unit, LpA

Calculation methods used in this program are patterned after the ASHRAE Guide; other ASHRAE Publications and the AHRI Acoustical Standards. While a very significant effort has been made to insure the technical accuracy of this program, it is assumed that the user is knowledgeable in the art of system sound estimation and is aware of the tolerances involved in real world acoustical estimation. This program makes certain assumptions as to the dominant sound sources and sound paths which may not always be appropriate to the real system being estimated. Because of this, no assurances can be offered that this software will always generate an accurate sound prediction from user supplied input data. If in doubt about the estimation of expected sound levels in a space, an Acoustical Engineer or a person with sound prediction expertise should be consulted.

Fan Curve

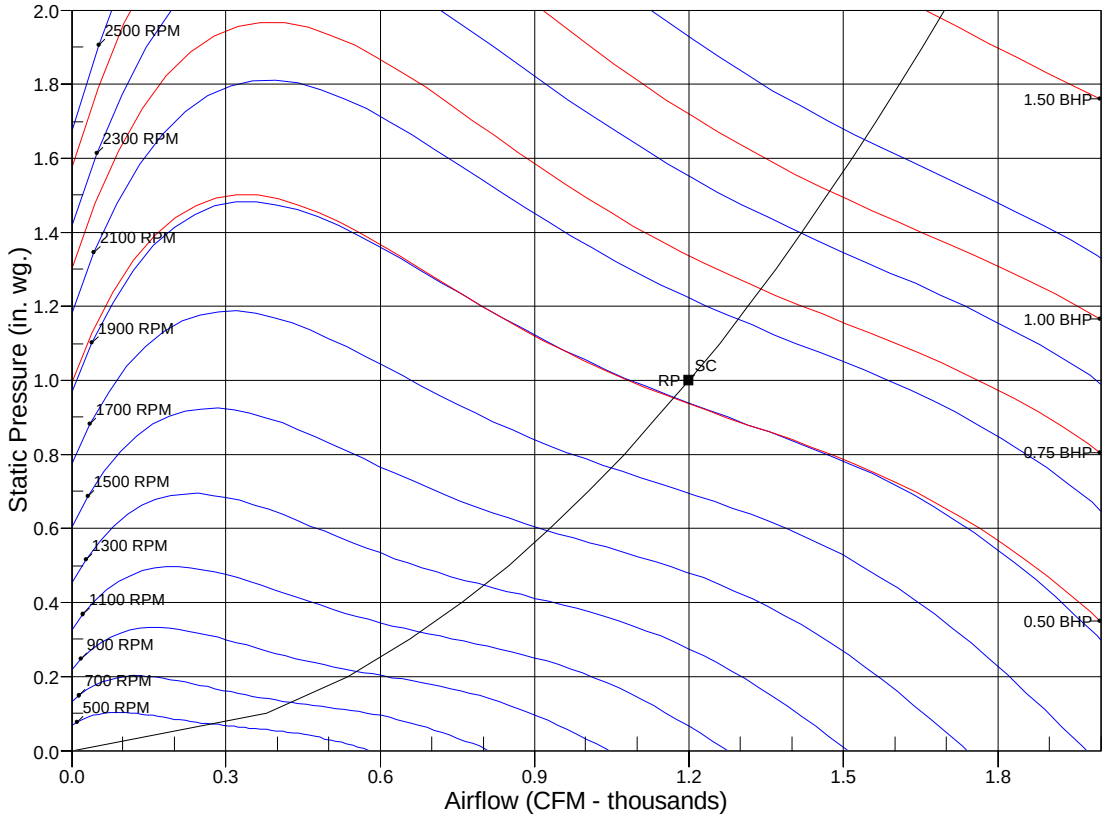

RPM = 1946 BHP = 0.54 Maximum RPM = 2490 Maximum BHP = 3.00
SC - System Curve RP - Rated Point

ID 4, 6-9

Tag Cover Sheet
Unit Report
Certified Drawing
Performance Report

Unit Report For ID 4, 6-9

Project: Climatec - City of Esc - Mathes CC
Prepared By: Shawn Harlan

04/12/2025
08:55AM

Unit Parameters

Unit Model: **50GEQM06A2M5-0A0A0**
Unit Size: **06 (5 Tons)**
Volts-Phase-Hertz: **208-3-60**
Heating Type: **Heat Pump**
Refrigerant: **R-454B**
Heat Control: **Two Stage Cooling, Single Circuit**
Duct Cfg: **Vertical Supply / Vertical Return**

Dimensions (ft. in.) & Weight (lb.) ***

Unit Length: **6' 2.375"**
Unit Width: **3' 10.625"**
Unit Height: **3' 5.375"**
Total Operating Weight: **613** lb

*** Weights and Dimensions are approximate. Weight does not include unit packaging. Approximate dimensions are provided primarily for shipping purposes. For exact dimensions and weights, refer to appropriate product data catalog.

Lines and Filters

Return Air Filter Type: **Throwaway**
Return Air Filter Quantity: **4**
Return Air Filter Size: **16 x 16 x 2**

Selection includes construction throwaway filter into the base fan curve.

Unit Configuration

Standard/Medium Static - EcoBlue Vane Axial Fan
Al/Cu - Al/Cu - Louvered Hail Guards
Standard Electromechanical Controls (can be used with field installed economizers and dampers)
Standard

Warranty Information

5-Year compressor parts (STD.)
1-Year parts (STD.)

No optional warranties were selected.

NOTE: Please see Warranty Catalog 500-089 for explanation of policies and ordering methods.

Ordering Information

Part Number	Description	Quantity
50GEQM06A2M5-0A0A0	Rooftop Unit	1

Certified Drawing for ID 4, 6-9

Project: Climatec - City of Esc - Mathes CC
Prepared By: Shawn Harlan

04/12/2025
08:55AM

NOTES:

1. DIMENSIONS ARE IN INCHES, DIMENSIONS IN [ ] ARE IN MILLIMETERS.
2. CENTER OF GRAVITY
3. DIRECTION OF AIR FLOW
4. ALL VIEW DRAWN USING 3RD ANGLE

UNIT	J	K
50GEQ*04	33 3/8 [847]	18 5/8 [472]
50GEQ*05	41 3/8 [1051]	14 7/8 [378]
50GEQ*06	41 3/8 [1051]	14 7/8 [378]

Carrier
THIS DOCUMENT IS THE PROPERTY OF CARRIER CORPORATION AND IS DELIVERED UPON THE EXPRESS CONDITION THAT THE CONTENTS WILL NOT BE DISCLOSED OR USED WITHOUT CARRIER CORPORATION'S WRITTEN CONSENT.
SUBMISSION OF THESE DRAWINGS OR DOCUMENTS DOES NOT CONSTITUTE PART PERFORMANCE OR ACCEPTANCE OF CONTRACT.

	CONNECTION SIZES
A	1 3/8" [35] DIA FIELD POWER SUPPLY HOLE
B	2" [51] DIA POWER SUPPLY KNOCKOUT
C	1 3/4" [44] DIA GAUGE ACCESS PLUG
D	7/8" [22] DIA FIELD CONTROL WIRING HOLE
E	3/4"-14 NPT CONDENSATE DRAIN
G	2 1/2 " [64] DIA POWER SUPPLY KNOCK-OUT

THRU-THE-BASE CHART
THESE HOLES REQUIRED FOR USE CRBTMPWR008A00, 009A00

	THREADED CONDUIT SIZE	WIRE USE	REQ'D HOLE SIZES (MAX.)
W	1/2"	115V	7/8" [22.2]
X	1/2"	24V	7/8" [22.2]
Y *	3/4"	POWER	1 1/8" [28.6]
Z**	(009A00) 1/2" FPT	GAS	1 1/8" [28.6]
	FOR "THRU-THE-BASEPAN" FACTORY OPTION, FITTINGS FOR ONLY X,Y, & Z ARE PROVIDED		
*	SELECT EITHER 3/4" OR 1/2" FOR POWER, DEPENDING ON WIRE SIZE		
**	(008A00) PROVIDES 3/4" FPT THRU CURB FLANGE & FITTING.		

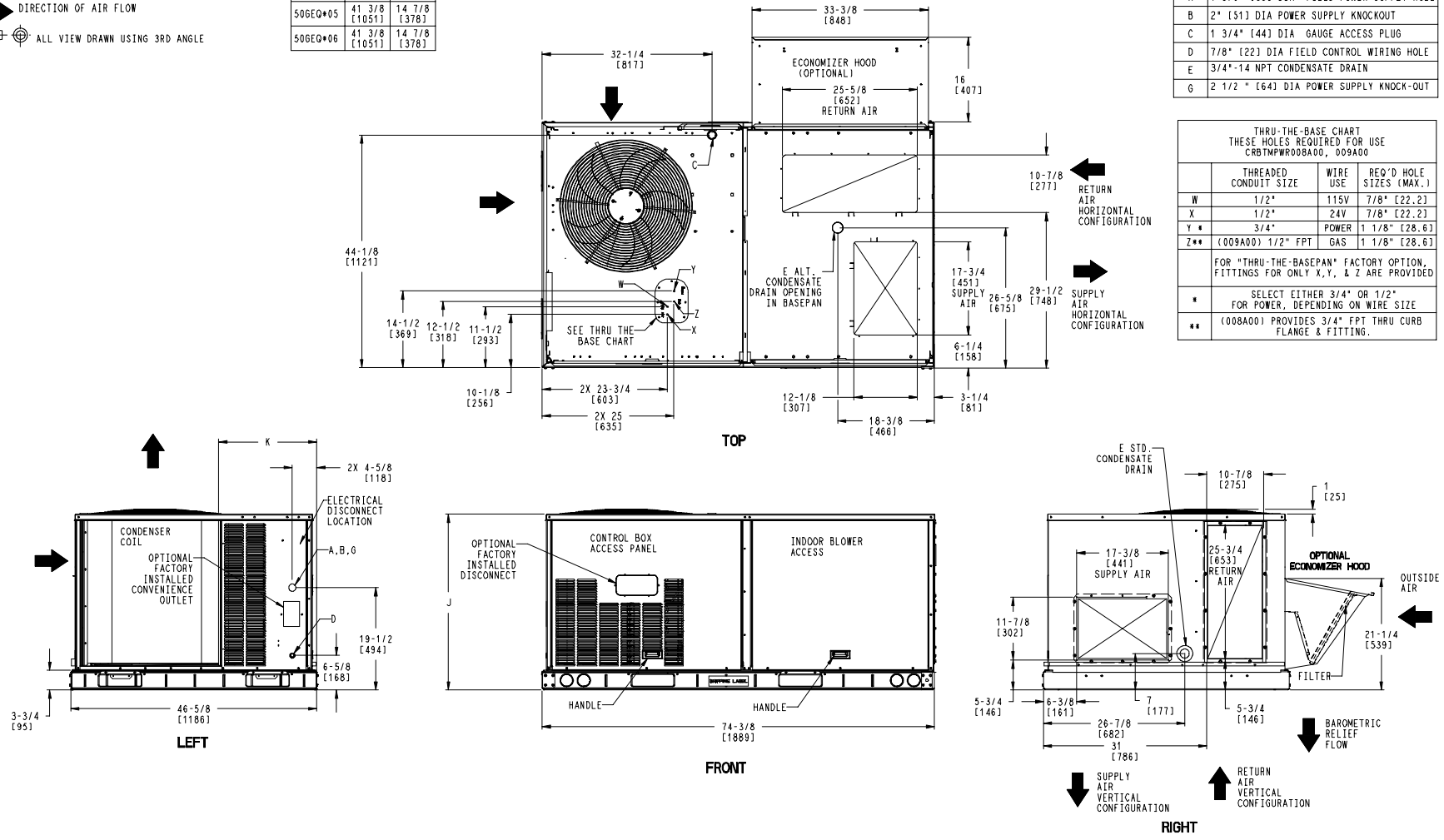

ITC CLASSIFICATION	SHEET	DATE	SUPERCEDES	50GEQ 04-06 SINGLE PACKAGE HEAT PUMP	48TC006647	REV
U.S. ECCN:NSR	1 OF 3	9/9/24	9/15/23			A

Certified Drawing for ID 4, 6-9

Project: Climatec - City of Esc - Mathes CC
Prepared By: Shawn Harlan

04/12/2025
08:55AM

UNIT	STD. UNIT WEIGHT *		CORNER WEIGHT (A)		CORNER WEIGHT (B)		CORNER WEIGHT (C)		CORNER WEIGHT (D)		C.G.		HEIGHT
	LBS.	KG.	LBS.	KG.	LBS.	KG.	LBS.	KG.	LBS.	KG.	X	Y	Z
50GEQ*04	475	215	128	58	120	54	110	50	117	53	36 [914]	22 3/8 [568]	16 1/8 [410]
50GEQ*05	594	269	163	74	148	67	135	61	149	68	35 3/8 [898]	22 5/16 [557]	16 1/2 [419]
50GEQ*06	596	270	163	74	148	67	135	61	149	68	35 3/8 [898]	22 5/16 [557]	16 1/2 [419]

*- STANDARD UNIT WEIGHT IS WITHOUT ELECTRIC HEAT AND WITHOUT PACKAGING.
FOR OTHER OPTIONS AND ACCESSORIES REFER TO THE PRODUCT DATA CATALOG.

Carrier
THIS DOCUMENT IS THE PROPERTY OF CARRIER CORPORATION AND IS DELIVERED UPON THE EXPRESS CONDITION THAT THE CONTENTS WILL NOT BE DISCLOSED OR USED WITHOUT CARRIER CORPORATION'S WRITTEN CONSENT.
SUBMISSION OF THESE DRAWINGS OR DOCUMENTS DOES NOT CONSTITUTE PART PERFORMANCE OR ACCEPTANCE OF CONTRACT.

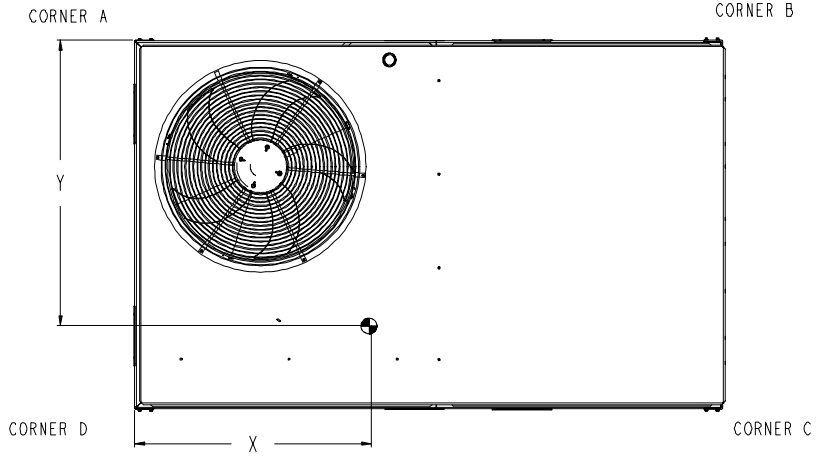

TOP

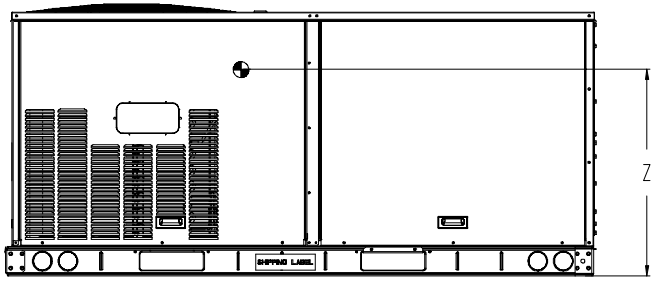

FRONT

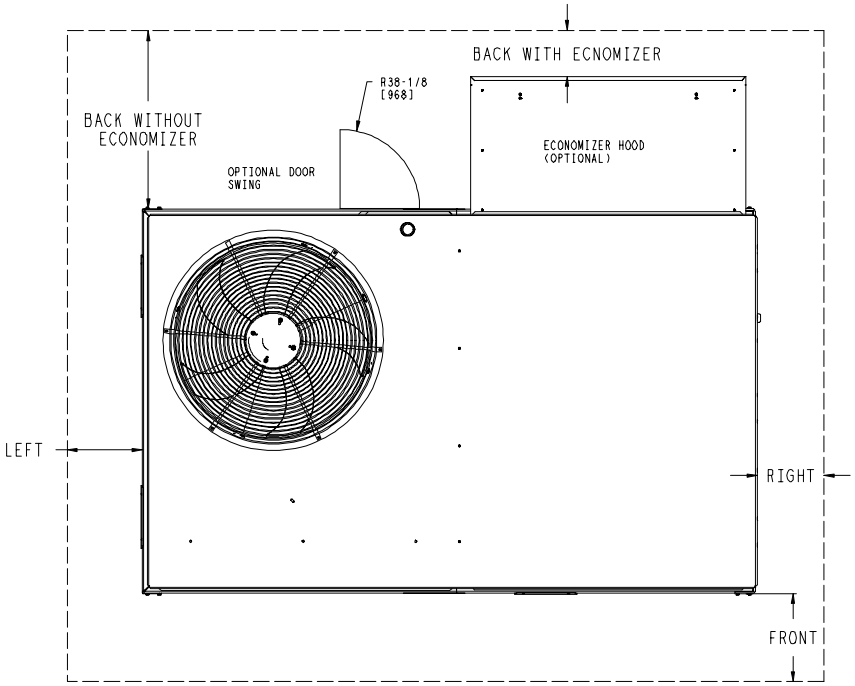

NOTE:

1. FOR ALL MINIMUM CLEARANCES LOCAL CODES OR JURISDICTIONS MAY PREVAIL.

	CLEARANCE		
	SERVICE WITH:	SERVICE WITH:	OPERATING
SURFACE	CONDUCTIVE BARRIER	NONCONDUCTIVE BARRIER	CLEARANCE
FRONT	48 [1219mm]	36 [914mm]	18 [457mm]
LEFT	48 [1219mm]	42 [1067mm]	18 [457mm]
BACK W/O ECON	48 [1219mm]	42 [1067mm]	18 [457mm]
BACK W/ECON	36 [914mm]	36 [914mm]	18 [457mm]
RIGHT	36 [914mm]	36 [914mm]	18 [457mm]
TOP	72 [1829mm]	72 [1829mm]	72 [1829mm]

ITC CLASSIFICATION	SHEET	DATE	SUPERCEDES			REV
U.S. ECCN:NSR	2 OF 3	9/9/24	9/15/23	50GEQ 04-06 SINGLE PACKAGE HEAT PUMP	48TC006647	A

Certified Drawing for ID 4, 6-9

Carrier

THIS DOCUMENT IS THE PROPERTY OF CARRIER CORPORATION AND IS DELIVERED UPON THE EXPRESS CONDITION THAT THE CONTENTS WILL NOT BE DISCLOSED OR USED WITHOUT CARRIER CORPORATION'S WRITTEN CONSENT.

SUBMISSION OF THESE DRAWINGS OR DOCUMENTS DOES NOT CONSTITUTE PART PERFORMANCE OR ACCEPTANCE OF CONTRACT.

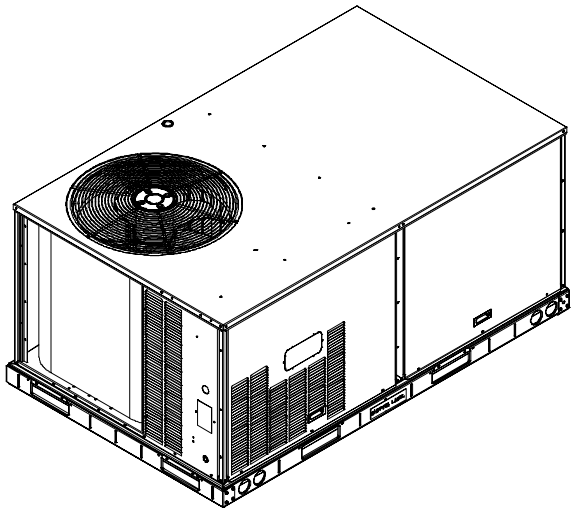

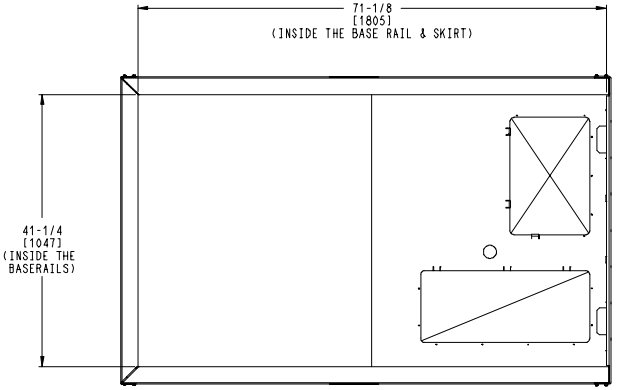

INSIDE BASERAIL DIMENSIONS
BOTTOM

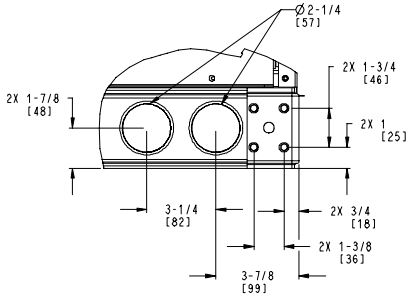

DETAIL **C**
TYP 4 PLCS

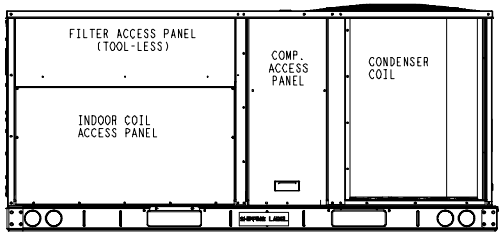

BACK

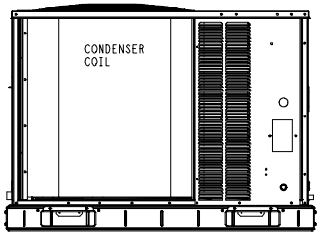

LEFT

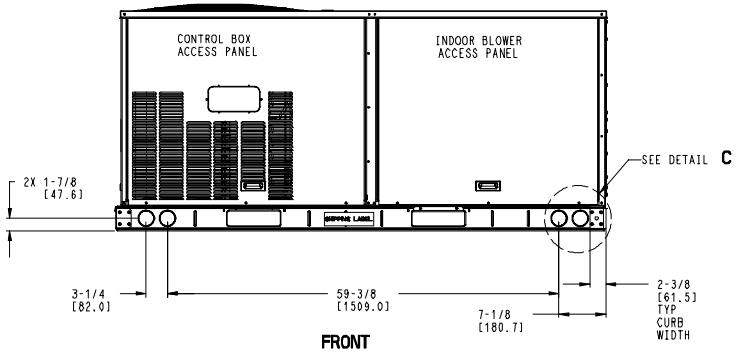

FRONT

ITC CLASSIFICATION	SHEET	DATE	SUPERCEDES			REV
U.S. ECCN:NSR	3 OF 3	9/9/24	9/15/23	50GEQ 04-06 SINGLE PACKAGE HEAT PUMP	48TC006647	A

Performance Summary For ID 4, 6-9

Project: Climatec - City of Esc - Mathes CC
Prepared By: Shawn Harlan

04/12/2025
08:55AM

Part Number:50GEQM06A2M5-0A0A0

Refrigerant:	**R-454B**	
ARI SEER:	**17.00**	
ARI SEER2:	**16.00**	
Application EER (Rooftop Unit only):	**11.77**	

Base Unit Dimensions

Unit Length:	**74.4**	in
Unit Width:	**46.6**	in
Unit Height:	**41.4**	in

Operating Weight

Base Unit Weight:	**596**	lb
Al/Cu - Al/Cu - Louvered Hail Guards:	**17**	lb
Total Operating Weight:	**613**	lb

Unit

Unit Voltage-Phase-Hertz:	**208-3-60**	
Air Discharge:	**Vertical**	
Fan Drive Type:	**Direct Drive**	
Actual Airflow:	**2000**	CFM
Site Altitude:	**0**	ft

Cooling Performance

Condenser Entering Air DB:	**95.0**	F
Evaporator Entering Air DB:	**80.0**	F
Evaporator Entering Air WB:	**67.0**	F
Entering Air Enthalpy:	**31.44**	BTU/lb
Evaporator Leaving Air DB:	**57.3**	F
Evaporator Leaving Air WB:	**57.1**	F
Evaporator Leaving Air Enthalpy:	**24.49**	BTU/lb
Unit Discharge Air DB:	**58.5**	F
Unit Discharge Air WB:	**57.6**	F
Unit Discharge Air Enthalpy:	**24.78**	BTU/lb
Gross Cooling Capacity:	**62.53**	MBH
Net Cooling Capacity:	**59.91**	MBH
Gross Sensible Capacity:	**49.01**	MBH
Net Sensible Capacity:	**46.39**	MBH
Compressor Power Input:	**4.02**	kW
Coil Bypass Factor:	**0.014**	

Heating Performance

Outdoor Ambient Temperature:	**47.0**	F
Entering Air Indoor Coil DB:	**70.0**	F
Leaving Air Indoor Coil DB:	**95.2**	F
Total Heating Capacity:	**54.50**	MBH
Integrated Heating Capacity:	**54.50**	MBH
Heating Power Input:	**4.20**	kW
High Temperature COP:	**3.80**	
Low Temperature COP:	**2.50**	
HSPF:	**7.2**	
High Temperature COP2:	**3.80**	
Low Temperature COP2:	**2.50**	
HSPF2:	**7.2**	

Supply Fan

External Static Pressure:	**1.00**	in wg
Fan RPM:	**2036**	
Fan Power:	**0.90**	BHP

Performance Summary For ID 4, 6-9

Project: Climatec - City of Esc - Mathes CC
Prepared By: Shawn Harlan

04/12/2025
08:55AM

NOTE: **Selected IFM RPM Range: 1228 - 2390**

Selection includes construction throwaway filter into the base fan curve. This filter is not MERV Rated.

Electrical Data

Voltage Range:	**187 - 253**
Compressor #1 RLA:	**15.4**
Compressor #1 LRA:	**150**
Indoor Fan Motor Type:	**MED**
Indoor Fan Motor FLA (Total):	**9.2**
Power Supply MCA:	**30**
Power Supply MOCP (Fuse or HACR):	**45**
Disconnect Size FLA:	**30**
Disconnect Size LRA:	**166**
Electrical Convenience Outlet:	**None**
Outdoor Fan [Qty / FLA (ea)]:	**1 / 1.3**

Control Panel SCCR: 5kA RMS at Rated Symmetrical Voltage

Acoustics

Sound Power Levels, db re 10E-12 Watts

	Discharge	Inlet	Outdoor
63 Hz	92.3	90.8	85.6
125 Hz	83.5	79.7	84.7
250 Hz	77.6	72.4	80.5
500 Hz	73.9	66.4	76.0
1000 Hz	70.7	68.5	72.4
2000 Hz	67.7	59.3	68.0
4000 Hz	64.3	53.1	62.8
8000 Hz	60.4	46.8	59.3
A-Weighted	77.2	72.6	79.0

Advanced Acoustics

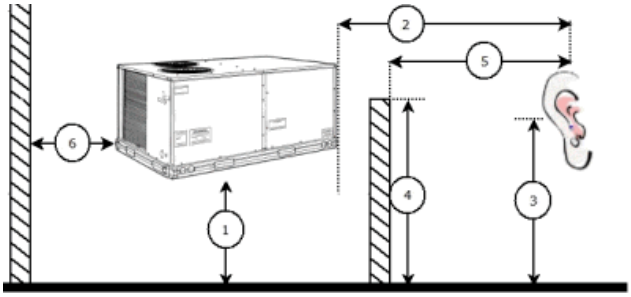

Advanced Accoustics Parameters

1. Unit height above ground:	**30.0**	ft
2. Horizontal distance from unit to receiver:	**50.0**	ft
3. Receiver height above ground:	**5.7**	ft
4. Height of obstruction:	**0.0**	ft
5. Horizontal distance from obstruction to receiver:	**0.0**	ft
6. Horizontal distance from unit to obstruction:	**0.0**	ft

Detailed Acoustics Information

Performance Summary For ID 4, 6-9

Project: Climatec - City of Esc - Mathes CC
Prepared By: Shawn Harlan

04/12/2025
08:55AM

Octave Band Center Freq. Hz	63	125	250	500	1k	2k	4k	8k	Overall
A	85.6	84.7	80.5	76.0	72.4	68.0	62.8	59.3	89.2 Lw
B	59.4	68.6	71.9	72.8	72.4	69.2	63.8	58.2	78.5 LwA
C	53.2	52.3	48.1	43.6	40.0	35.6	30.4	26.9	56.8 Lp
D	27.0	36.2	39.5	40.4	40.0	36.8	31.4	25.8	46.1 LpA

Legend
A Sound Power Levels at Unit's Acoustic Center, Lw
B A-Weighted Sound Power Levels at Unit's Acoustic Center, LwA
C Sound Pressure Levels at Specific Distance from Unit, Lp
D A-Weighted Sound Pressure Levels at Specific Distance from Unit, LpA

Calculation methods used in this program are patterned after the ASHRAE Guide; other ASHRAE Publications and the AHRI Acoustical Standards. While a very significant effort has been made to insure the technical accuracy of this program, it is assumed that the user is knowledgeable in the art of system sound estimation and is aware of the tolerances involved in real world acoustical estimation. This program makes certain assumptions as to the dominant sound sources and sound paths which may not always be appropriate to the real system being estimated. Because of this, no assurances can be offered that this software will always generate an accurate sound prediction from user supplied input data. If in doubt about the estimation of expected sound levels in a space, an Acoustical Engineer or a person with sound prediction expertise should be consulted.

Fan Curve

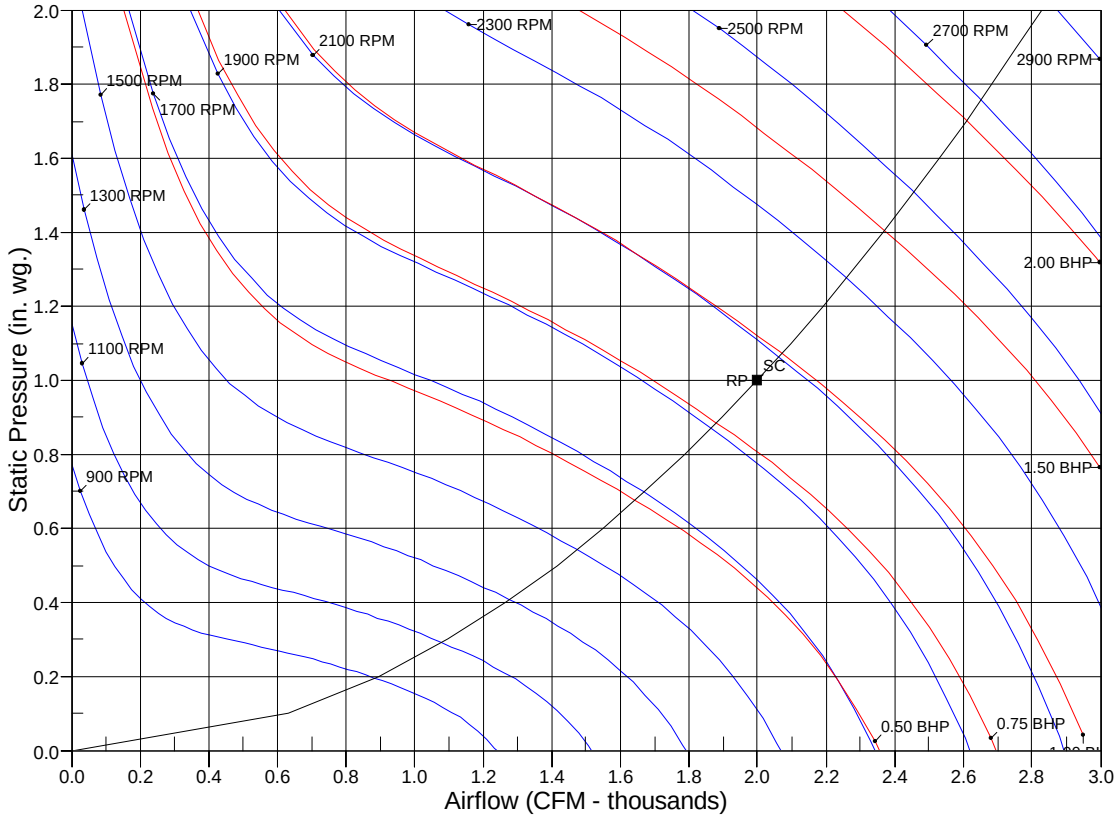

RPM = 2036 BHP = 0.90 Maximum RPM = 2836 Maximum BHP = 3.00
SC - System Curve RP - Rated Point

Outdoor Unit Heat Pump Ductless System

Outdoor Model: **37MARAQ09AA3**

Carrier

Turn to the experts

Job Data: _____ **Location:** _____

Tag #: _____ **Carrier#:** _____

Date: _____

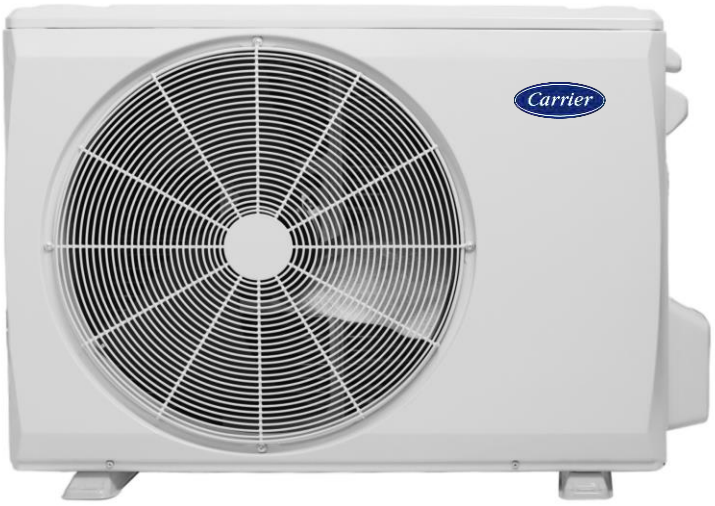

OUTDOOR STANDARD FEATURES

- Variable Speed (Inverter)
- Factory installed Base Pan Heater
- Factory installed Crankcase Heater
- Low Voltage Controls
- Auto-Restart function
- Condenser High Temp Protection
- Quiet operation
- Anti-corrosive fin coating

RESIDENTIAL APPLICATION LIMITED WARRANTY*

- Ten (10) years if properly registered within ninety (90) days after original installation, parts are warranted to the original purchaser for a period of ten (10) years. Otherwise, parts warranty is five (5) years.

NOTE: Images for illustration purposes only. Actual models may be slightly different.

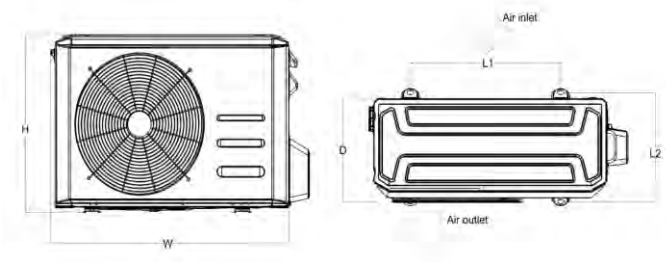

OUTDOOR UNIT DIMENSIONS						
Capacity	**Unit**	**W**	**D**	**H**	**L1**	**L2**
9K/12K	mm	765	303	555	452.4	313.82
	inch	30.12	11.93	21.85	17.81	12.36
18K	mm	890	342	673	663	379.59
	inch	35.04	13.46	26.5	26.1	14.94
24K ~ 36K	mm	946	410	810	672.96	454.8
	inch	37.24	16.14	31.89	26.49	17.19

Outdoor - Heat Pump			
System	**Outdoor Model #**		37MARAQ09AA3
	Outdoor Size		9000
Electrical	Voltage, Phase, Cycle	V/Ph/Hz	208-230/1/60
	MCA	A.	12
	MOPA	A.	15
	SCCR	kA	5
Operating Range	Cooling Outdoor DB Min - Max	°F(°C)	-13~122(-25～50)
	Heating Outdoor DB Min - Max	°F(°C)	-13~75(-25～24)
Piping	Min. Piping Length	ft (m)	9.8 (3)
	Standard Piping Length	ft. (m)	24.6 (7.5)
	Total Piping Length	ft (m)	82.02(25)
	Piping Lift*	ft (m)	49.21(15)
	Pipe Connection Size - Liquid	in (mm)	1/4in(6.35mm)
	Pipe Connection Size - Suction	in (mm)	3/8in(9.52mm)
Refrigerant	Refrigerant Type		R454B
	Charge	lbs (kg)	2.03(0.92)
	Add'l Refrigerant (between Std & Max Piping Lengths)	Oz/ft (g/m)	0.16(15)
Outdoor Coil	Face Area	Sq. Ft.	4.04
	No. Rows		2
	Fins per inch		20
	Circuits		4
Compressor	Type		ROTARY
	Model		KSK103D33UEZ3
	Oil Type		ESTER OIL
	Oil Charge	Fl. Oz.	10.48
	Rated Current	RLA	0.62
Airflow & Sound	Airflow	CFM	1236.7
	Sound Pressure	dB(A)	52.5
Dimensions	Height	in (mm)	21.85(555)
	Width	in (mm)	30.12(765)
	Depth	in (mm)	11.93(303)
	Net Weight	lbs (kg)	62.17(28.2)
	Shipping Height	in (mm)	24.02(610)
	Shipping Width	in (mm)	34.92(887)
	Shipping Depth	in (mm)	13.27(337)
	Shipping Net Weight	lbs (kg)	67.68(30.7)

*** Condensing unit above or below indoor unit**

AHRI CERTIFIED www.ahridirectory.org Unitary Small HP AHRI Standard 210/240

C SP US

Puron Advance™

Carrier Corporation Copyright 2024 • Atlanta, GA, 30339
SUBJECT TO CHANGE WITHOUT NOTICE

Outdoor Heat Pump Ductless System

Outdoor Model: **37MBHAQ58AA3**

Turn to the experts

Job Data: _____ **Location:** _____

Tag #: _____ **Carrier#:** _____

Date: _____

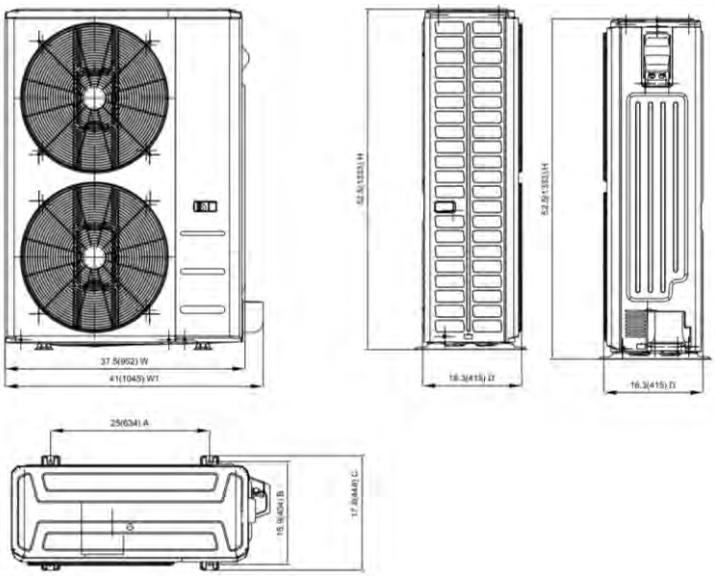

OUTDOOR STANDARD FEATURES

- Variable Speed (Inverter)
- Factory installed Base Pan Heater
- Factory installed Crankcase Heater
- Low Voltage Controls
- Auto-Restart function
- Condenser High Temp Protection
- Quiet operation
- Anti-corrosive fin coating

RESIDENTIAL APPLICATION LIMITED WARRANTY*

• Ten (10) years if properly registered within ninety (90) days after original installation, parts are warranted to the original purchaser for a period of ten (10) years. Otherwise, parts warranty is five (5) years.

NOTE: Images for illustration purposes only. Actual models may be slightly different.

Outdoor - Heat Pump			
System	**Outdoor Model #**		37MBHAQ58AA3
	Outdoor Size		60000
Electrical	Voltage, Phase, Cycle	V/Ph/Hz	208-230/1/60
	MCA	A.	3
	MOPA	A.	15
	SCCR	kA	5
Operating Range	Cooling Outdoor DB Min - Max	°F(°C)	-22~122(-30～50)
	Heating Outdoor DB Min - Max	°F(°C)	-22~75(-30～24)
Piping	Min. Piping Length	ft (m)	9.8 (3)
	Standard Piping Length	ft. (m)	24.6 (7.5)
	Total Piping Length	ft (m)	246(75)
	Piping Lift*	ft (m)	98.4(30)
	Pipe Connection Size - Liquid	in (mm)	3/8"(9.52)
	Pipe Connection Size - Suction	in (mm)	3/4"(19)
Refrigerant	Refrigerant Type		R454B
	Charge	lbs (kg)	9.48(4.3)
	Add'l Refrigerant (between Std & Max Piping Lengths)	Oz/ft (g/m)	0.32(30)
Outdoor Coil	Face Area	Sq. Ft.	6.65
	No. Rows		2.6
	Fins per inch		20
	Circuits		5
Compressor	Type		TWIN-ROTARY
	Model		EKPQ440D1UMUB
	Oil Type		ESTER OIL
	Oil Charge	Fl. Oz.	43.96
	Rated Current	RLA	7
Airflow & Sound	Airflow	CFM	4235.3
	Sound Pressure	dB(A)	64.5
Dimensions	Height	in (mm)	52.48(1333)
	Width	in (mm)	37.48(952)
	Depth	in (mm)	16.34(415)
	Net Weight	lbs (kg)	230.38(104.5)
	Shipping Height	in (mm)	57.48(1460)
	Shipping Width	in (mm)	43.11(1095)
	Shipping Depth	in (mm)	19.49(495)
	Shipping Net Weight	lbs (kg)	261.69(118.7)

*** Condensing unit above or below indoor unit**

Carrier Corporation Copyright 2024 • Atlanta, GA, 30339
SUBJECT TO CHANGE WITHOUT NOTICE

AHRI CERTIFIED www.ahridirectory.org Unitary Small HP AHRI Standard 210/240

C SA US

Puron Advance™

High Wall Heat Pump Ductless System

Indoor Model: 45MAHAQ09XA3

Turn to the experts

Job Data: _____ **Location:** _____

Tag #: _____ **Carrier#:** _____

Date: _____

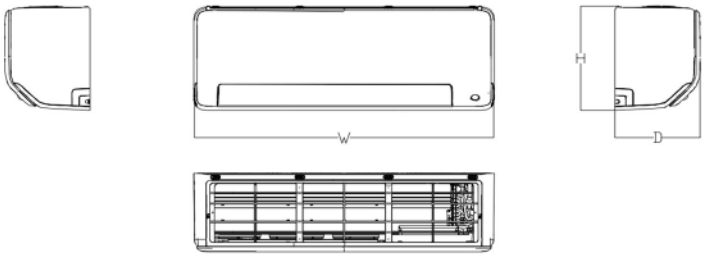

INDOOR STANDARD FEATURES

- Modes: Cool, Heat, Dry, Fan, Auto
- Four fan speeds
- Sleep Mode
- Turbo Mode
- Follow Me (senses temperature at handheld remote)
- Auto-Restart function
- Quiet indoor operation
- Anti-corrosive fin coating

RESIDENTIAL APPLICATION LIMITED WARRANTY*

- Ten (10) years if properly registered within ninety (90) days after original installation, parts are warranted to the original purchaser for a period of ten (10) years. Otherwise, parts warranty is five (5) years.

NOTE: Images for illustration purposes only. Actual models may be slightly different.

INDOOR UNIT DIMENSIONS				
Capacity	Unit	W	D	H
6K/9K/12K	mm	795	225	295
	inch	31.3	8.86	11.61
18K	mm	965	239	319
	inch	37.99	9.41	12.56
24K ~ 36K	mm	1140	275	370
	inch	44.88	10.83	14.57

45MAHAQ09XA3			
System	Indoor Model #		45MAHAQ09XA3
	Indoor Size		9000
Electrical	Voltage, Phase, Cycle	V/Ph/Hz	208/230-1-60
	Power Supply	Indoor unit powered by outdoor unit	
	MCA	A.	3
Operating Range	Cooling Indoor DB Min - Max	°F(°C)	60~90(16～32)
	Heating Indoor DB Min - Max	°F(°C)	32~86(0～30)
Indoor Coil	Face Area	Sq. Ft.	2.15
	No. Rows		2
	Fins per inch		20
	Circuits		3
Indoor Unit	Number of Fan Speeds		1100/850/700
	Airflow (highest to lowest)	CFM	441.4 / 323.7 / 229.6 / 176.6 / 147.2
	Sound Pressure (highest to lowest)	dB(A)	N\A/38/33/20.5/19.5
	Moisture Removal	L/h	0.3
	Air Throw Data	ft(m)	23.62(7.2)
Dimensions	Height	in (mm)	11.61(295)
	Width	in (mm)	31.30(795)
	Depth	in (mm)	8.86(225)
	Net Weight	lbs (kg)	23.37(10.6)
	Shipping Height	in (mm)	12.01(305)
	Shipping Width	in (mm)	34.25(870)
	Shipping Depth	in (mm)	14.57(370)
	Shipping Net Weight	lbs (kg)	29.98(13.6)
CONTROLS			
Standard	Wireless Remote Controller (°F/°C Convertible)		
Optional	Wired Remote Control 7 Day Programmable		KSACN1401AAA
	Wired Remote Control with Timer Function		KSACN1201AAA
	Wi-Fi™ Kit High Wall		KSAIF0701AAA
	24V Mini Interface		KSAIC0601230

Carrier Corporation Copyright 2024 • Atlanta, GA, 30339
SUBJECT TO CHANGE WITHOUT NOTICE

Puron Advance™

Air Handler Heat Pump Ductless System

Indoor Model: **45MBAAQ60XA3**

Carrier

Turn to the experts

Job Data:

Tag #:

Date:

Location:

Carrier#:

INDOOR STANDARD FEATURES

- Modes: Cool, Heat, Dry, Fan, Auto
- 4-way installation (Up flow, Down flow, Right, Left)
- Auto-Restart function
- Quiet indoor operation
- Aluminum hydrophilic pre-coated fins

RESIDENTIAL APPLICATION LIMITED WARRANTY*

- Ten (10) years if properly registered within ninety (90) days after original installation, parts are warranted to the original purchaser for a period of ten (10) years. Otherwise, parts warranty is five (5) years.

NOTE: Images for illustration purposes only. Actual models may be slightly different.

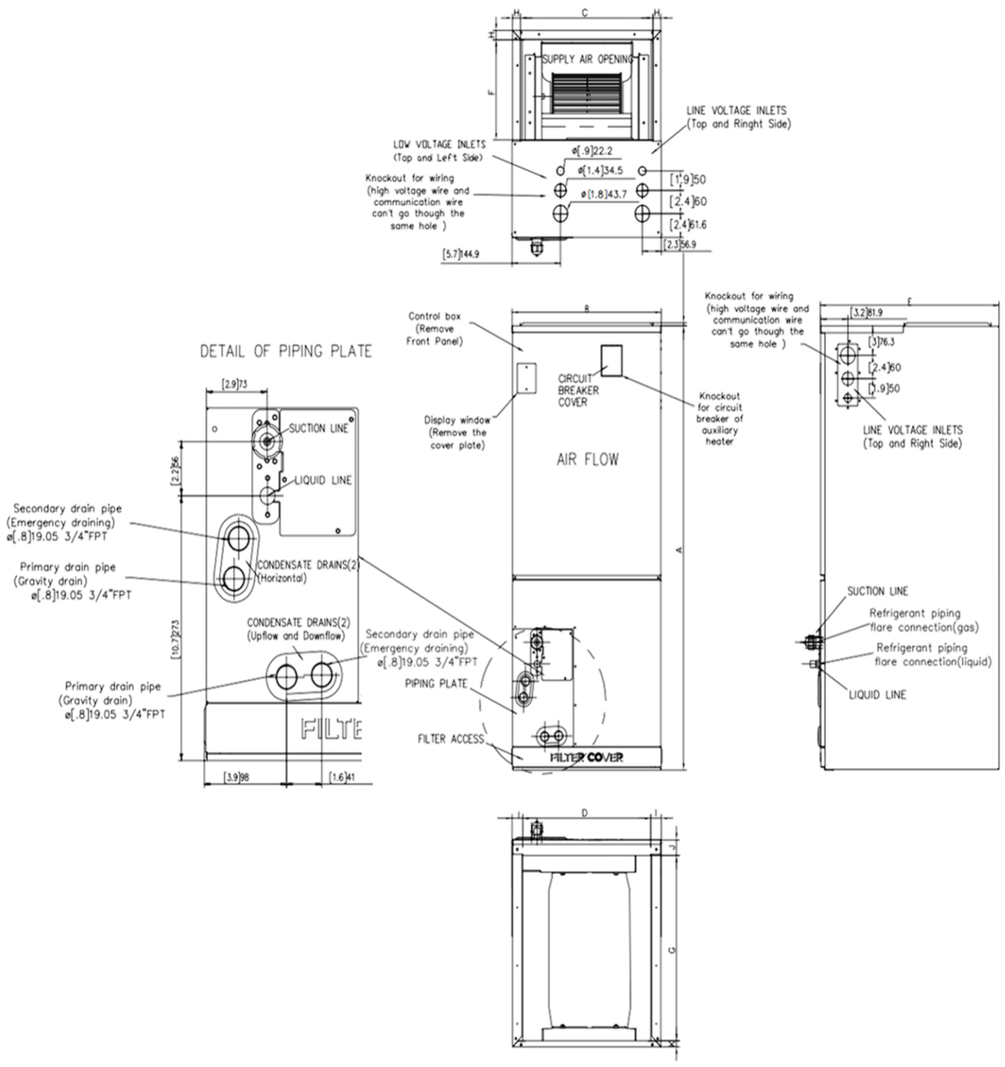

45MBAAQ60XA3			
System	**Indoor Model #**		45MBAAQ60XA3
	Indoor Size		60000
Electrical	Voltage, Phase, Cycle	V/Ph/Hz	208-230/1/60
	Power Supply	Indoor unit powered by outdoor unit	
	MCA	A.	11
Operating Range	Cooling Indoor DB Min - Max	°F(°C)	60~90(16～32)
	Heating Indoor DB Min - Max	°F(°C)	32~86(0～30)
Indoor Coil	No. Rows		5
	Fins per inch		20
	Circuits		14
Indoor Unit	Number of Fan Speeds		820/720/615
	Airflow (highest to lowest)	CFM	1807.0 / 1553.9 / 1353.8 / 724.0 / N\A
	Sound Pressure (highest to lowest)	dB(A)	53.0/48.0/33.5
Dimensions	Height	in (mm)	52.99(1346)
	Width	in (mm)	24.49(622)
	Depth	in (mm)	21.02(534)
	Net Weight	lbs (kg)	164.02(74.4)
	Shipping Height	in (mm)	21.20(640)
	Shipping Width	in (mm)	56.30(1430)
	Shipping Depth	in (mm)	28.15(715)
	Shipping Net Weight	lbs (kg)	189.82(86.1)
CONTROLS			
Standard	Wireless Remote Controller (°F/°C Convertible)		
Optional	Wired Remote Control 7 Day Programmable		KSACN1401AAA
	24V Mini Interface		KSAIC0601230

INDOOR UNIT DIMENSIONS					
Dimensions		36K		48K/60K	
		Inch	mm	Inch	mm
A	Model Height	49	1245	53	1346
B	Model Width	21	534	24.5	622
C	S.A. Opening Width	19.1	486	22.6	575
D	R.A. Opening Width	18.6	473	22.1	562
E	Model Depth	21	534	21	534
F	S.A. Opening Depth	10.3	260	10.3	260
G	R.A. Opening Depth	18.8	476	18.8	476
H	S.A. Opening Clearance	0.9	24	0.9	24
I	R.A. Opening Side Clearance	1.3	32	1.1	28
J	R.A. Opening Front Clearance	1.6	41	1.6	41
K	R.A. Opening Back Clearance	0.6	16	0.8	19

Carrier Corporation Copyright 2024 • Atlanta, GA, 30339
SUBJECT TO CHANGE WITHOUT NOTICE

AHRI CERTIFIED™ www.ahridirectory.org
Unitary Small HP
AHRI Standard 210/240
Certification applies only when the complete system is listed with AHRI.

Puron Advance™

SUBMITTAL

Project

Climatec - City of Esc - Oak Hill Activity Center

Date

Saturday, April 12, 2025

Shawn Harlan
Sigler - Brea
205 Puente Street
Brea CA

Table Of Contents

Project: Climatec - City of Esc - Oak Hill Activity Center 04/12/2025
Prepared By: Shawn Harlan

ID 2 **3**
Unit Report 4
Performance Summary 6
System Parameters 6
Electrical Data 6
Acoustic Summary 7
Certified Drawing 8

ID 2

Submittal Cover Sheet
Unit Report
Performance Summary Report
Acoustic Summary
Certified Drawings

Unit Report For ID 2

Project: Climatec - City of Esc - Oak Hill Activity Center 04/12/2025
Prepared By: Shawn Harlan

Outdoor Unit Parameters

Unit Model:	**27SCA**	
Unit Size:	**5 Tons (Size 60)**	
Voltage:	**208/230-1-60**	V-Ph-Hz

Indoor Coil Parameters

Unit Model:	**F55A**	
Unit Size:	**Size (60) 60,000 Btuh**	
Cabinet Insulation:	**Modular, TXV**	
Voltage:	**115-1-60**	V-Ph-Hz
Refrigerant Type:	**Puron Advance**	
Heating Size:	**No Heat**	

Outdoor Unit Dimensions and Weight

Unit Length:	**35**	in
Unit Width:	**35**	in
Unit Height:	**35.5**	in
Unit Shipping Weight:	**255.**	lb

Indoor Coil Dimensions and Weight

Unit Length:	**22.0625**	in
Unit Width:	**24.4375**	in
Unit Height:	**59.1875**	in
Unit Shipping Weight:	**210.5**	lb

RESIDENTIAL APPLICATIONS
This warranty is to the original purchasing owner and subsequent owners only to the extent and as stated in the Warranty Conditions and below. The limited warranty period in years, depending on the part and the claimant, is as shown in the table below.

Limited Warranty (Years)		
Item	**Original Owner**	**Subsequent Owner**
Parts	10* (or 5)	5
Compressor	10* (or 5)	5

***If properly registered within 90 days of original installation, otherwise 5 years (except in California and Quebec and other jurisdictions that prohibit warranty benefits conditioned on registration). See Warranty Conditions below.**

OTHER APPLICATIONS
The warranty period is five (5) years on the compressor, and one (1) year on all other parts. The warranty is the original owner only and is not available for subsequent owners.

Ordering Information

Part Number	Description	Quantity
Outdoor Unit		
27SCA560A003	27SCA Comfort Single Stage Heat Pump with Puron Refrigerant Advanced 5 Tons Cooling	1
	15 SEER @ ARI Conditions	
Indoor Coil		
F55AABD60L00	F55A 115V Base Series Fan Coil for Puron Advance 5 Tons Cooling 115-1-60	1
	Modular, TXV	
	Aluminum	

The Product and Ratings Data in this program is subject to change at any time and without notice. Please refer to the latest product literature and the AHRI directory at www.ahridirectory.org for the most up-to-date information.

Unit Report For ID 2

Project: Climatec - City of Esc - Oak Hill Activity Center 04/12/2025
Prepared By: Shawn Harlan

Performance Summary For ID 2

Project: Climatec - City of Esc - Oak Hill Activity Center 04/12/2025
Prepared By: Shawn Harlan

System Performance

System:	**27SCA/F55A**	
System Quantity:	**1**	
Altitude:	**0.0**	ft
Linear Pipe Length:	**0.0**	ft
COP @ 47 F:	**3.74**	
COP @ 17 F:	**2.60**	
SEER @ ARI Conditions:	**14.5**	
EER @ ARI Conditions:	**12.0**	
HSPF @ ARI Conditions:	**7.5**	

Actual Clg Airflow:	**1950.0**	CFM
Standard Clg Airflow:	**1950.0**	CFM
Total Net Clg Capacity:	**57.76**	MBH
Net Sensible Clg Capacity:	**44.09**	MBH
Htg HP Capacity:	**57.60**	MBH
Htg HP Integrated Capacity:	**57.60**	MBH
Heating HP Compressor Power:	**4.27**	kW
Total System Power:	**5.83**	kW

System Parameters

Outdoor Unit Parameters

Unit Model:	**27SCA560A003**	
Unit Size (Nominal):	**5 Tons (Size 60)**	
Voltage:	**208/230-1-60**	V-Ph-Hz
Clg Ent Air DB Ambient:	**95.0**	°F
Htg Ent Air DB Ambient:	**47.0**	°F

Indoor Coil Parameters

Unit Model:	**F55AABD60L00**	
Unit Size (Nominal):	**Size (60) 60,000 Btuh**	
Voltage:	**115-1-60**	V-Ph-Hz
Ent Air DB:	**80.00**	°F
Ent Air WB:	**67.00**	°F
Ent Enthalpy:	**31.44**	BTU/lb
Lvg Air DB:	**59.07**	°F
Lvg Air WB:	**57.72**	°F
Lvg Enthalpy:	**24.86**	BTU/lb
Htg Ent Air DB:	**70.0**	°F
Htg Lvg Air DB:	**97.4**	°F
Heating Size (Nominal):	**No Heat**	
Total External Static Pressure:	**0.50**	in wg

Electrical Data

Outdoor Electrical Data

Unit Voltage:	**208/230-1-60**	V-Ph-Hz
Fan Motor FLA:	**1.50**	Amps
MCA:	**31.1**	Amps
Max Fuse:	**50**	Amps
Operating Range Min:	**197**	V
Operating Range Max:	**253**	V
Compressor RLA:	**23.7**	Amps
Compressor LRA:	**157.0**	Amps

Indoor Electrical Data:

(For units with no factory installed electric heaters)

Unit Voltage:	**115-1-60**	V-Ph-Hz
Unit FLA:	**8.5**	Amps
Unit MCA:	**10.7**	Amps
Unit MOCP:	**15.0**	Amps
Unit Min Wire Size:	**14.0**	
Unit Fuse/Ckt Bkr Amps:	**15.0**	Amps
Motor HP:	**3/4**	HP

Notice: Indoor Elect. data is for 115-1-60 voltage

The Product and Ratings Data in this program is subject to change at any time and without notice. Please refer to the latest product literature and the AHRI directory at www.ahridirectory.org for the most up-to-date information.

Acoustic Summary For ID 2

Project: Climatec - City of Esc - Oak Hill Activity Center 04/12/2025
Prepared By: Shawn Harlan

Outdoor Unit Parameters:

Unit Model: **27SCA**
Unit Size: **5 Tons (Size 60)**
Variations: **Standard**

Octave Band Center Frequency, Hz	125	250	500	1k	2k	4k	8k	dBA
Sound Power,dB	66.6	68.6	69.2	70.8	62.9	60.8	62.7	
A-Weighted Sound Power, dBA								74.0

Indoor Coil Parameters:

Unit Model: **F55A**
Unit Size: **Size (60) 60,000 Btuh**
Cabinet Insulation: **Modular, TXV**

Octave Band Center Frequency, Hz	63	125	250	500	1k	2k	4k
Sound Power,dB	76.0	72.0	68.0	65.0	63.0	61.0	57.0

The Product and Ratings Data in this program is subject to change at any time and without notice. Please refer to the latest product literature and the AHRI directory at www.ahridirectory.org for the most up-to-date information.

Certified Drawing For ID 2

Project: Climatec - City of Esc - Oak Hill Activity Center
Prepared By: Shawn Harlan

04/12/2025

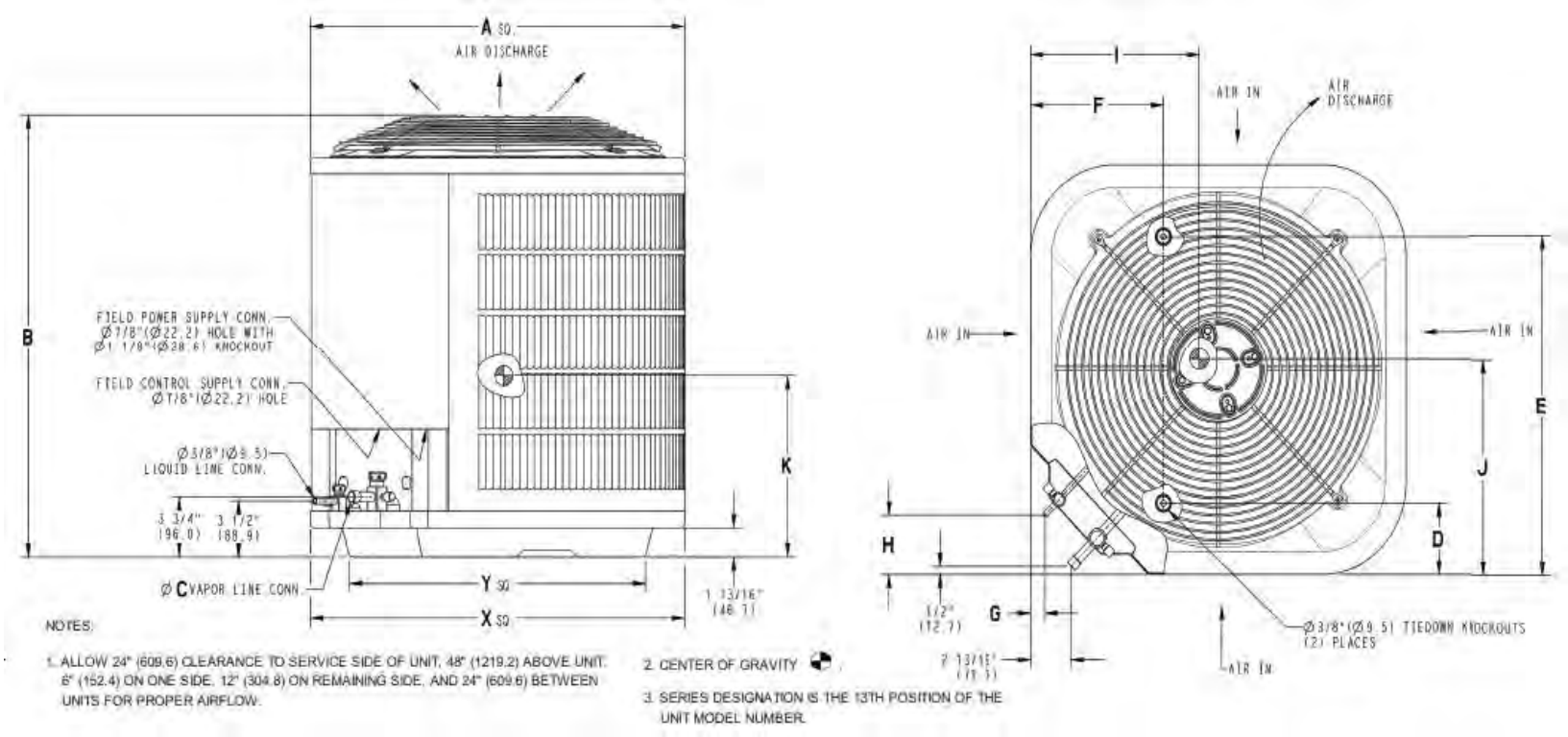

Outdoor Model

Unit Model:	**27SCA**	
Unit Size:	**5 Tons (Size 60)**	
Voltage:	**208/230-1-60**	V-Ph-Hz
SEER:	**15**	
PartNumber:	**27SCA560A003**	

Shipping Dimensions and Weights	Outdoor Unit
Height	39.81 in
Width	34.25 in
Length	34.25 in
Operating Weight	234. lb
Shipping Weight	255. lb

Dimensions										
A	B	C	D	E	F	G	H	I	J	K
35.00 in	35.50 in	0.88 in	6.56 in	28.44 in	9.13 in	1.13 in	3.81 in	13.00 in	15.50 in	16.75 in

The Product and Ratings Data in this program is subject to change at any time and without notice. Please refer to the latest product literature and the AHRI directory at www.ahridirectory.org for the most up-to-date information.

Certified Drawing For ID 2

Project: Climatec - City of Esc - Oak Hill Activity Center
Prepared By: Shawn Harlan

04/12/2025

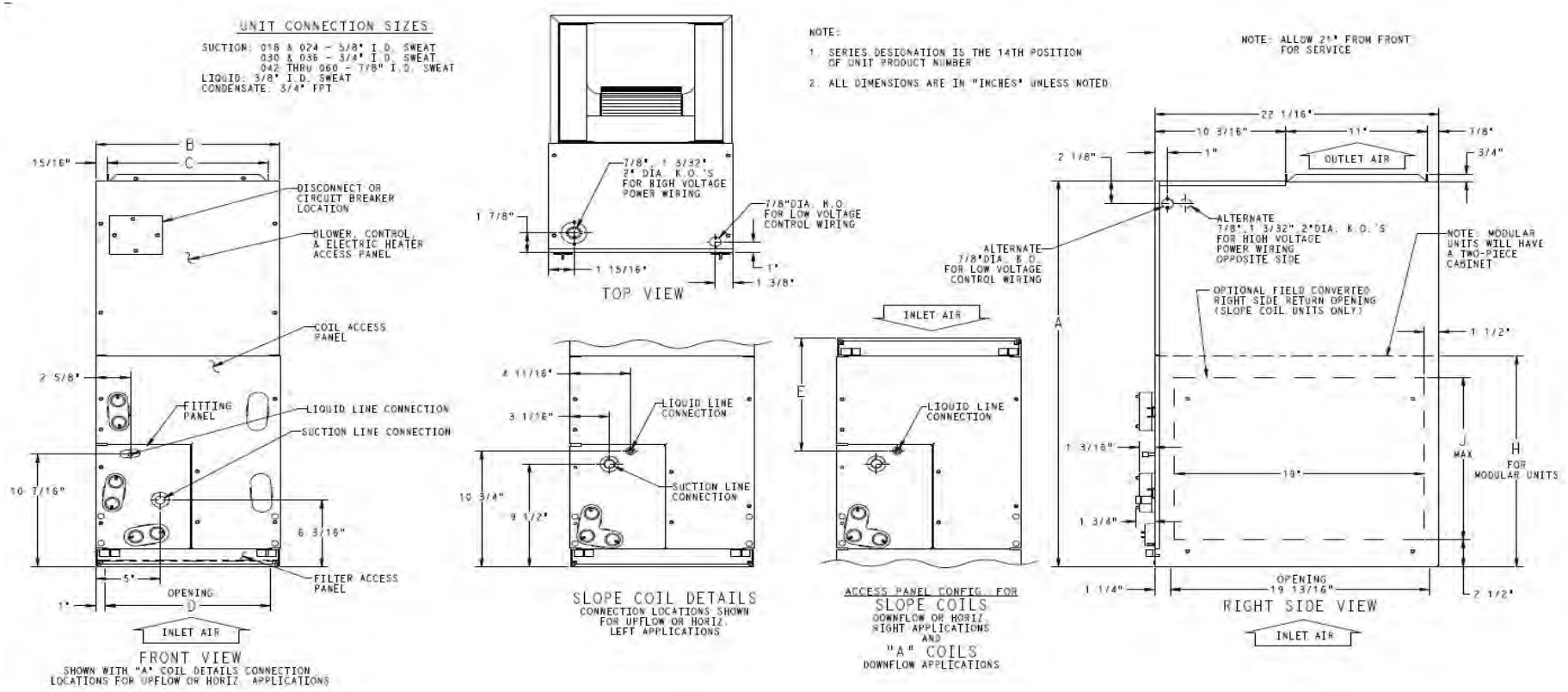

Indoor Coil

Unit Model: **F55A**
Unit Size: **Size (60) 60,000 Btuh**
Voltage: **115-1-60** V-Ph-Hz
Cabinet Insulation: **Modular, TXV**
PartNumber: **F55AABD60L00**

Dimensions and Weights	Indoor Coil
Height	59.19 in
Width	24.44 in
Length	22.06 in
Shipping Weight	210.5 lb

Dimensions								
A	B	C	D	E	F	G	H	J
59.19 in	24.69 in	22.75 in	22.69 in	25.25 in	32.94 in	32.63 in	34.06 in	--

The Product and Ratings Data in this program is subject to change at any time and without notice. Please refer to the latest product literature and the AHRI directory at www.ahridirectory.org for the most up-to-date information.

Certified Drawing For ID 2

Project: Climatec - City of Esc - Oak Hill Activity Center
Prepared By: Shawn Harlan

04/12/2025

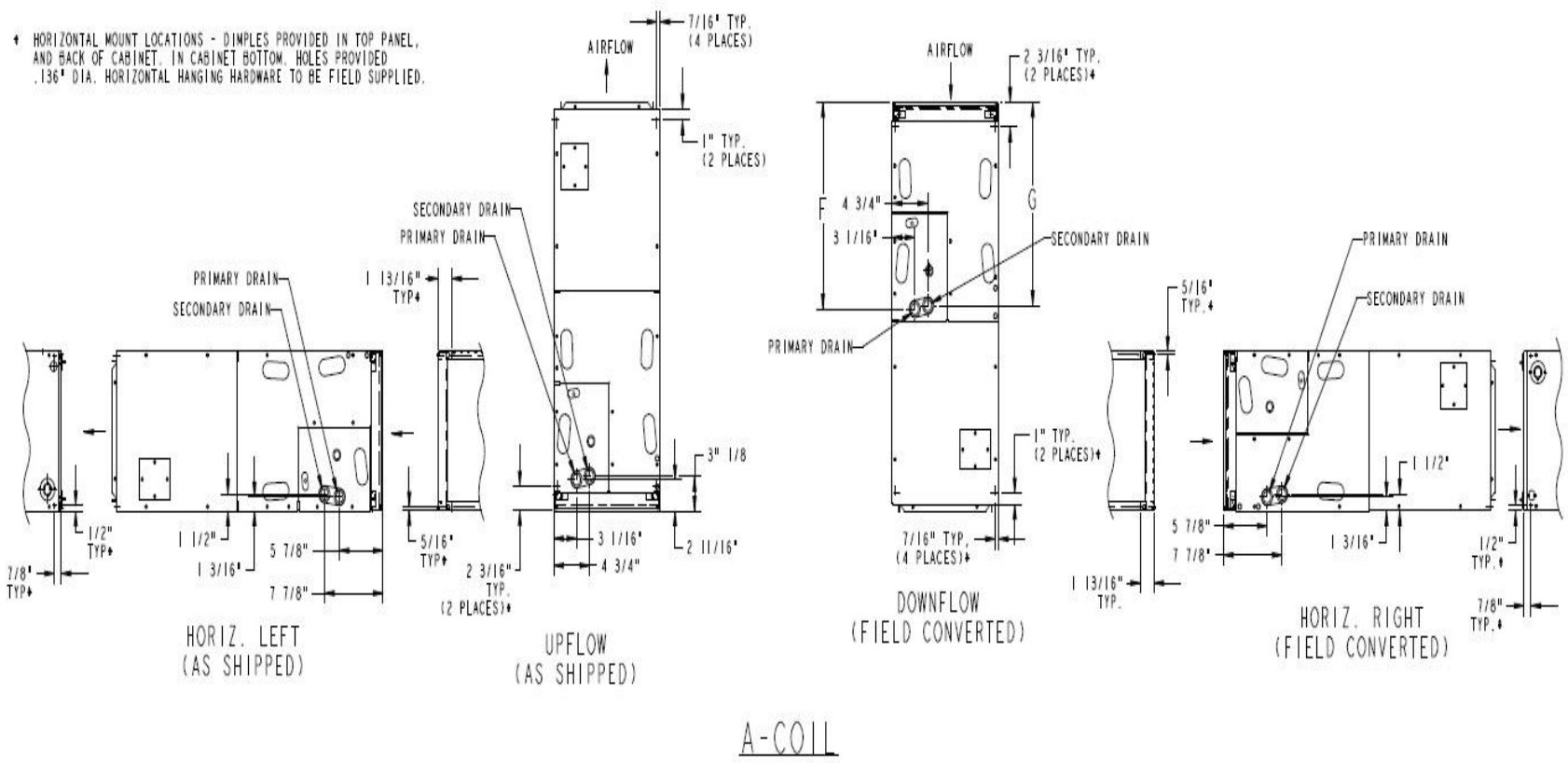

A-COIL

Indoor Coil

Unit Model:	**F55A**	
Unit Size:	**Size (60) 60,000 Btuh**	
Voltage:	**115-1-60**	V-Ph-Hz
PartNumber:	**F55AABD60L00**	

The Product and Ratings Data in this program is subject to change at any time and without notice. Please refer to the latest product literature and the AHRI directory at www.ahridirectory.org for the most up-to-date information.

Room Size Limitations

	MAH1020H	MAH1024H	MAH1030H	MAH1036H	MAH1042H	MAH1048H	MAH1060H
Refrigerant Charge (oz.)	110	110	112	120	140	160	184
Minimum Room Size (ft²)	108.0	108.0	109.8	117.8	137.5	157.1	180.6
Minimum Supply Height (ft)	6.9	6.9	6.9	6.9	6.9	6.9	6.9
		MAH2024H	MAH2030H	MAH2036H	MAH2042H	MAH2048H	MAH2060H
Refrigerant Charge (oz.)		120	120	150	140	160	184
Minimum Room Size (ft²)		117.8	117.8	147.5	137.5	157.1	180.6
Minimum Supply Height (ft)		6.9	6.9	6.9	6.9	6.9	6.9

Marvair Heat Pump Model Identification

MAH1024HA050C++Z+1DE+D32++++++

1	Unit Designation/Family	**M** = Marvair Wall Mount **S** = Stock Unit
2	Energy Efficiency Ratio (EER)	**A** = 11
3	Refrigerant Type	**H** = R-454B
4	Compressor Type/Quantity	**1** = Single Stage Compressor **2** = 2-Stage Compressor
5 6 7	Unit Capacity/Nominal Cooling (BTUH)	**020** = 20,000 | **042** = 42,000 **024** = 24,000 | **048** = 48,000 **030** = 30,000 | **060** = 60,000 **036** = 36,000
8	System Type	**H** = Heat Pump
9	Power Supply (Volts-Hz-Phase)	**A** = 208/230-60-1 | **D** = 460-60-3 **C** = 208/230-60-3
10 11 12	Heat Designation @ Rated Voltage	**000** = No Heat | **090** = 9KW **040** = 4KW | **100** = 10KW **050** = 5KW | **120** = 12KW **060** = 6KW | **150** = 15KW **080** = 8KW
13	Ventilation Configuration	**C** = Economizer **D** = Motorized Damper w/Pressure Relief **E** = Motorized Damper w/Pressure Relief & Independent Motorized Damper Control **H** = GreenWheel® ERV **N** = Barometric Damper w/15% OSA **T** = Title 24 Compliant Economizer & Controls **+** = None **$** = Special
14	Dehumidification	**G** = Hot Gas Reheat **R** = Electric Reheat **T** = Electric Reheat w/Humidity Control **+** = None **$** = Special
15	Controls	**A** = Power Fail Alarm w/Additional Lockouts **C** = 24V EMS Relay Kit **+** = None **$** = Special
16	Operating Condition	**A** = Evaporator Freeze Sensor (EFS) **C** = EFS w/Hot Gas Bypass **D** = Desert Duty **E** = Extreme Duty **F** = Desert Duty w/Hard Start **G** = Desert Duty w/EFS **H** = Desert Duty w/Hard Start & EFS **J** = Extreme Duty w/Hard Start **K** = Extreme Duty w/EFS **M** = Extreme Duty w/Hard Start & EFS **N** = Hard Start **P** = Hard Start w/Low Ambient & CCH **Q** = Hard Start w/Low Ambient & Fan Cycle Control (FCC) **R** = Crank Case Heater (CCH) **T** = Hard Start w/EFS **U** = Hard Start w/Hot Gas Bypass **V** = Hard Start w/Low Ambient & CCH & EFS **W** = Low Ambient w/CCH **X** = Hot Gas Bypass **Y** = Low Ambient w/CCH & FCC **Z** = Low Ambient w/CCH & EFS **1** = Low Ambient w/FCC **2** = Low Ambient w/FCC & EFS **3** = CCH w/Hot Gas Bypass **+** = None **$** = Special
17	Indoor Air Quality Features	**A** = UV Light **D** = Dry Bulb Sensor **E** = Dry Bulb Sensor w/Dirty Filter **G** = Dirty Filter Sensor **K** = Bi-Polar Ionization **M** = Dry Bulb Sensor & CO2 Sensor (Only w/Economizer) **+** = None **$** = Special
18	Air Flow	**1** = Top Supply/Center Return (STD) **$** = Special
19	Compressor Location	**D** = Left Hand - All 3½ to 5 ton units **E** = Right Hand - All 1½ to 3 ton units
20	Filter Option	**A** = 2" Pleated (MERV 8, AC/HP-C) **C** = 2" Charcoal **D** = MERV 11 High Filtration Package **E** = MERV 13 High Filtration Package **F** = Filter Access Through Return Air Grille **W** = Aluminum Washable **+** = None **$** = Special
21	Corrosion Protection	**A** = Condenser Coil Only **C** = Evaporator Coil Only **D** = Both Coils Condenser & Evaporator **E** = All Coils Cond/Evap/Reheat **F** = Coat All **G** = Coastal Package & Evaporator Coil **K** = Coastal Package **+** = None **$** = Special
22 23	Engineering Revision Level	**A3** **D3**
24	Cabinet Color	**1** = Marvair Beige (STD) **2** = Gray (STD) **3** = Carlsbad Canyon (STD) **4** = White (STD) **5** = Stainless Steel Exterior **9** = Pebble Gray **A** = Stainless Steel - Unit **$** = Custom Color (Powder Coat)
25	Sound Attenuation	**2** = Compressor Blanket **+** = None
26	Security Option	**A** = Lockable Access Plate/Tamper Proof **C** = Tamper Proof Screws **D** = Lockable Access Plate w/Tamper Proof **+** = None **$** = Special
27	Fastener/Drain Pan Option	**A** = Stainless Steel Fasteners **C** = Stainless Steel Drain Pan **D** = Stainless Steel Fasteners & Drain Pan **+** = None **$** = Special
28	Miscellaneous	**C** = Copeland Compressor **+** = None **$** = Special
29	Unused	**+** = None **$** = Special
30	Special Variation	**+** = None **$** = Special Configuration Not Covered by Model Nomenclature

Note: Not all options are available with all configurations. Contact your Marvair sales representative for configuration details and feature compatibility.

Marvair MAH Single Stage Heat Pump Certified Ratings & Performance

Efficiency and Capacity Ratings at ANSI/AHRI Standard 390 - MAH Heat Pumps

Model Number	MAH1020H	MAH1024H			MAH1030H			MAH1036H			MAH1042H			MAH1048H			MAH1060H		
	A	A	C	D	A	C	D	A	C	D	A	C	D	A	C	D	A	C	D
Cooling BTUH[1]	20,000	24,000			29,000			35,000			42,000			46,000			57,000		
EER[2]	11	11			11			11			11			11			11		
High Temperature Heating[3]	20,000	24,000			27,000			30,000			34,000			42,000			51,000		
High Temperature COP[4]	3.3	3.3			3.3			3.3			3.3			3.3			3.3		
Rated Air Flow (CFM[5])	760	820			1,150			1,200			1,350			1,700			1,800		

[1]Cooling is rated at 95°F (35°C) outdoor and 80°F DB/67°F WB (26.5°C DB/19.5°C WB) return air.
[2]EER = Energy Efficiency Ratio
[3]High Temperature Heating & COP are rated at 47°F DB/43°WB (8.3°C DB/6.1°C WB) outdoor and 70°F (21.1°C) return air.
[4]COP = Coefficient of Performance
[5]CFM = Cubic Feet per Minute

Ratings are with no outside air. Performance will be affected by altitude. Ratings are at 230 volts for 208/230 volt units ("A" & "C" models) and 460 volts for "D" models. Operation of units at a different voltage from that of the rating point will affect performance and air flow.

Sensible Total Heat Ratio @ 95°F (35°C) Outside Air DB - MAH Heat Pumps

Model Number	MAH1020H	MAH1024H			MAH1030H			MAH1036H			MAH1042H			MAH1048H			MAH1060H		
	A	A	C	D	A	C	D	A	C	D	A	C	D	A	C	D	A	C	D
Total Capacity	20,000	24,000			29,000			35,000			42,000			46,000			57,000		
Sensible Heat Ratio	0.80	0.80			0.70			0.70			0.70			0.70			0.60		
Sensible Capacity	15,000	18,600			21,500			24,500			27,400			31,000			36,900		
Rated Air Flow (CFM[1])	760	820			1,150			1,200			1,350			1,700			1,800		

[1]CFM=Cubic Feet per Minute
Sensible Heat Ratios based upon ANSI/AHRI std. 390 outdoor conditions of 95°F (35°C) outdoor and 80°F DB/67°F WB (26.5°C DB/19.5°C WB) return air.

Cooling Performance (BTUH) at Various Outdoor Temperatures - MAH Heat Pumps

Model Number	Outdoor Temperature											
	75°F/24°C	80°F/26.5°C	85°F/29°C	90°F/32°C	95°F/35°C	100°F/38°C	105°F/40.5°C	110°F/43.3°C	115°F/46°C	120°F/49°C	125°F/52°C	130°F/54°C
MAH1020H	23,200	22,400	21,600	20,800	20,000	19,200	18,400	17,600	17,200	16,840	16,480	16,120
MAH1024H	27,840	26,880	25,920	24,960	24,000	23,040	22,080	21,120	20,640	20,208	19,776	19,344
MAH1030H	33,640	32,480	31,320	30,160	29,000	27,840	26,680	25,520	24,940	24,418	23,896	23,374
MAH1036H	40,600	39,200	37,800	36,400	35,000	33,600	32,200	30,800	30,100	29,470	28,840	28,210
MAH1042H	48,720	47,040	45,360	43,680	42,000	40,320	38,640	36,960	36,120	35,364	34,608	33,852
MAH1048H	53,360	51,520	49,680	47,840	46,000	44,160	42,320	40,480	39,560	38,732	37,904	37,076
MAH1060H	66,120	63,840	61,560	59,280	57,000	54,720	52,440	50,160	49,020	47,994	46,968	45,942

Based upon ANSI/AHRI std. 390 return air conditions of 80°F DB/67°F WB (26.5°C DB/19.5°C WB). Return air at rated air flow.

Heating Performance (BTUH) at Various Outdoor Temperatures - MAH Heat Pumps

Model Number	Outdoor Temperature								
	10°F/-12.2°C	17°F/-8.3°C	20°F/-6.7°C	30°F/-1.1°C	40°F/4.4°C	47°F/8.3°C	50°F/10°C	60°F/15.6°C	70°F/21.1°C
MAH1020H	10,766	11,333	12,200	15,233	17,833	20,000	20,600	21,500	22,500
MAH1024H	11,560	13,600	14,640	18,280	21,400	24,000	24,720	25,800	27,000
MAH1030H	15,130	17,800	18,720	21,940	24,700	27,000	27,810	29,025	30,375
MAH1036H	15,810	18,600	19,740	23,730	27,150	30,000	30,900	32,250	33,750
MAH1042H	18,700	22,000	23,340	28,030	32,050	35,400	36,462	38,055	39,825
MAH1048H	20,400	24,000	25,800	32,100	37,500	42,000	43,260	45,150	47,250
MAH1060H	22,900	27,000	29,300	37,500	44,600	51,000	51,900	54,300	61,100

Based upon ANSI/AHRI std. 390 return air conditions of 70°F DB (21.1°C DB). Return air at rated air flow.

Electrical Characteristics - Compressor, Fan, Ventilation & Blower Motors
MAH Heat Pumps with Single Stage Compressor

Basic Model	Compressor				Outdoor Fan Motor				Indoor Blower Motor				Ventilation GreenWheel AMPS		
	Type	Volts-Hz-Ph	RLA[1]	LRA[2]	Volts-Hz-PH	RPM[3]	FLA[4]	HP[5]	Volts-Hz-PH	RPM[3]	FLA[4]	HP[5]	OAM[6]	EXM[7]	WD[8]
MAH1020HA	Scroll	208/230-60-1	10.3	60.2	208/230-60-1	1200	3.5	1/3	208/230-60-1	1200	2.8	1/3			
MAH1024HA		208/230-60-1	11.9	67.8	208/230-60-1	1200	3.5	1/3	208/230-60-1	1200	2.8	1/3	1.0	1.0	0.2
MAH1030HA		208/230-60-1	13.5	82.5	208/230-60-1	1200	3.5	1/3	208/230-60-1	1200	4.1	1/2	1.0	1.0	0.2
MAH1036HA		208/230-60-1	14.7	109.0	208/230-60-1	1200	3.5	1/3	208/230-60-1	1050	4.1	1/2	1.0	1.0	0.2
MAH1042HA		208/230-60-1	18.6	123.0	208/230-60-1	1200	5.3	1/2	208/230-60-1	1050	4.1	1/2	1.0	1.0	0.2
MAH1048HA		208/230-60-1	22.4	126.0	208/230-60-1	1200	5.3	1/2	208/230-60-1	1050	4.1	1/2	1.0	1.0	0.2
MAH1060HA		208/230-60-1	25.6	155.0	208/230-60-1	1200	6.3	3/4	208/230-60-1	1050	6.0	3/4	1.0	1.0	0.2
MAH1024HC	Scroll	208/230-60-3	8.3	67.7	208/230-60-1	1200	3.5	1/3	208/230-60-1	1200	2.8	1/3			
MAH1030HC		208/230-60-3	12.8	97.5	208/230-60-1	1200	3.5	1/3	208/230-60-1	1200	4.1	1/2	1.0	1.0	0.2
MAH1036HC		208/230-60-3	12.2	102.8	208/230-60-1	1200	3.5	1/3	208/230-60-1	1200	4.1	1/2	1.0	1.0	0.2
MAH1042HC		208/230-60-3	12.8	102.8	208/230-60-1	1200	5.3	1/2	208/230-60-1	1050	4.1	1/2	1.0	1.0	0.2
MAH1048HC		208/230-60-3	12.8	120.4	208/230-60-1	1200	5.3	1/2	208/230-60-1	1050	4.1	1/2	1.0	1.0	0.2
MAH1060HC		208/230-60-3	18.6	155.0	208/230-60-1	1200	6.3	3/4	208/230-60-1	1050	6.0	3/4	1.0	1.0	0.2
MAH1024HD	Scroll	460-60-3	5.1	38.1	208/230-60-1	1200	3.5	1/3	208/230-60-1	1200	2.8	1/3			
MAH1030HD		460-60-3	5.1	44.3	208/230-60-1	1200	3.5	1/3	208/230-60-1	1200	4.1	1/2	1.0	1.0	0.2
MAH1036HD		460-60-3	5.8	50.0	208/230-60-1	1200	3.5	1/3	208/230-60-1	1200	4.1	1/2	1.0	1.0	0.2
MAH1042HD		460-60-3	5.8	50.0	208/230-60-1	1200	5.3	1/2	208/230-60-1	1050	4.1	1/2	1.0	1.0	0.2
MAH1048HD		460-60-3	6.0	49.4	208/230-60-1	1200	5.3	1/2	208/230-60-1	1050	4.1	1/2	1.0	1.0	0.2
MAH1060HD		460-60-3	8.3	58.1	208/230-60-1	1200	6.3	3/4	208/230-60-1	1050	6.0	3/4	1.0	1.0	0.2
MAH1024HZ	Scroll	575-60-3	3.8	27.7	208/230-60-1	1200	3.5	1/3	208/230-60-1	1200	2.8	1/3			
MAH1030HZ		575-60-3	4.5	27.1	208/230-60-1	1200	3.5	1/3	208/230-60-1	1200	4.1	1/2	1.0	1.0	0.2
MAH1036HZ		575-60-3	4.5	41.0	208/230-60-1	1200	3.5	1/3	208/230-60-1	1200	4.1	1/2	1.0	1.0	0.2
MAH1042HZ		575-60-3	5.1	41.0	208/230-60-1	1200	5.3	1/2	208/230-60-1	1050	4.1	1/2	1.0	1.0	0.2
MAH1048HZ		575-60-3	5.8	41.0	208/230-60-1	1200	5.3	1/2	208/230-60-1	1050	4.1	1/2	1.0	1.0	0.2
MAH1060HZ		575-60-3	7.7	47.8	208/230-60-1	1200	6.3	3/4	208/230-60-1	1050	6.0	3/4	1.0	1.0	0.2

[1]RLA = Rated Load Amps
[2]LRA = Locked Rotor Amps
[3]RPM = Revolutions per Minute
[4]FLA = Full Load Amps
[5]HP = Horsepower
[6]OAM = Outside Air Mover
[7]EXM = Exhaust Air Mover
[8]WD = Wheel Drive Motor
The 460 volt units have a step down transformer for the 230 volt motors.

600

MAH Heat Pumps Summary Electrical Ratings (Wire and HACR Circuit Breaker Sizing) - Ventilation Configuration:

C: Economizer, Outside Air with Pressure Relief
D: Motorized 2-Position Damper, up to 450 cfm of Outside Air w/Pressure Relief
E: Motorized Damper w/Pressure Relief & Independent Motorized Damper Control
N: Barometric Damper, up to 15% Outside Air
T: Title 24 Compliant Economizer & Controls

Electric Heat		000 = None		040 = 4 kw		050 = 5 kw		060 = 6 kw		080 = 8 kw		090 = 9 kw		100 = 10 kw		120 = 12 kw		150 = 15 kw	
Basic Model	Volts-Hz-Ph	SPPE[3]		SPPE[3]		SPPE[3]		SPPE[3]		SPPE[3]		SPPE[3]		SPPE[3]		SPPE[3]		SPPE[3]	
		MCA[1]	MFS[2]	MCA[1]	MFS[2]	MCA[1]	MFS[2]	MCA[1]	MFS[2]	MCA[1]	MFS[2]	MCA[1]	MFS[2]	MCA[1]	MFS[2]	MCA[1]	MFS[2]	MCA[1]	MFS[2]
MAH1020HA	208/230-60-1	19.2	25	40.0	45	45.2	50	50.4	60	60.8	70			71.3	80				
MAH1024HA	208/230-60-1	21.2	30	42.0	45	47.2	50	52.4	60	62.8	70			73.3	80				
MAH1030HA	208/230-60-1	24.5	35	45.3	50	50.5	60	55.7	60	66.1	70			76.6	80	87.0	90	102.6	110
MAH1036HA	208/230-60-1	26.0	40	46.8	50	52.0	60	57.2	60	67.6	70			78.1	80	88.5	90	104.1	110
MAH1042HA	208/230-60-1	32.7	50	53.5	60	58.7	70							84.7	90	95.2	100	110.8	125
MAH1048HA	208/230-60-1	37.4	50	58.2	70	63.4	80							89.5	100	99.9	100	115.5	125
MAH1060HA	208/230-60-1	44.3	60	65.1	80	70.3	90							96.4	110	106.8	110	122.4	125
MAH1024HC	208/230-60-3	16.7	20					34.7	35			43.7	45			52.8	60	61.8	70
MAH1030HC	208/230-60-3	23.6	35					41.6	50			50.7	60			59.7	60	68.7	70
MAH1036HC	208/230-60-3	22.9	35					40.9	45			49.9	50			58.9	60	68.0	70
MAH1042HC	208/230-60-3	25.4	35					43.4	50			52.5	60			61.5	70	70.5	80
MAH1048HC	208/230-60-3	25.4	35					43.4	50			52.5	60			61.5	70	70.5	80
MAH1060HC	208/230-60-3	35.6	50					53.6	60			62.6	70			71.6	80	80.7	90
MAH1024HD	460-60-3	9.5	15					18.5	20			23.1	25			27.6	30	32.1	35
MAH1030HD	460-60-3	10.2	15					19.2	20			23.7	25			28.2	30	32.7	35
MAH1036HD	460-60-3	11.1	15					20.1	25			24.6	25			29.1	30	33.6	35
MAH1042HD	460-60-3	12.0	15					21.0	25			25.5	30			30.0	30	34.5	35
MAH1048HD	460-60-3	12.2	15					21.2	25			25.7	30			30.2	35	34.8	35
MAH1060HD	460-60-3	16.5	20					25.5	30			30.1	35			34.6	35	39.1	40
MAH1024HZ	575-60-3	7.3	15					14.8	15			18.6	20			22.3	25	26.1	30
MAH1030HZ	575-60-3	8.7	15					16.2	20			20.0	20			23.7	25	27.5	30
MAH1036HZ	575-60-3	8.7	15					16.2	20			20.0	20			23.7	25	27.5	30
MAH1042HZ	575-60-3	10.1	15					17.7	20			21.4	25			25.2	30	29.0	30
MAH1048HZ	575-60-3	11.0	15					18.5	20			22.3	25			26.1	30	29.8	30
MAH1060HZ	575-60-3	14.5	20					22.1	25			25.8	30			29.6	30	33.4	35

S-Circuit - The user can move a pin on the board to control whether the electric heat will operate simultaneously with the compressor (S Circuit – NO) or will not run simultaneously with the compressor (S Circuit – Yes).
[1]MCA = Minimum Circuit Ampacity (Wiring Size Amps) [2]MFS = Maximum Fuse or HACR Breaker Size [3]SPPE = Single Point Power Entry
MCA & MFS are calculated at 230 volts on the 208-230v. (HPA & HPC) models. The 460 volt HPD models are calculated at 460 volts. This chart should only be used as a guideline for estimating conductor size and overcurrent protection. For the requirements of specific units, always refer to the data label on the unit.

Dimensional Data: MAH1020H/1024H & MAH2024H

Engineering Revision "A"

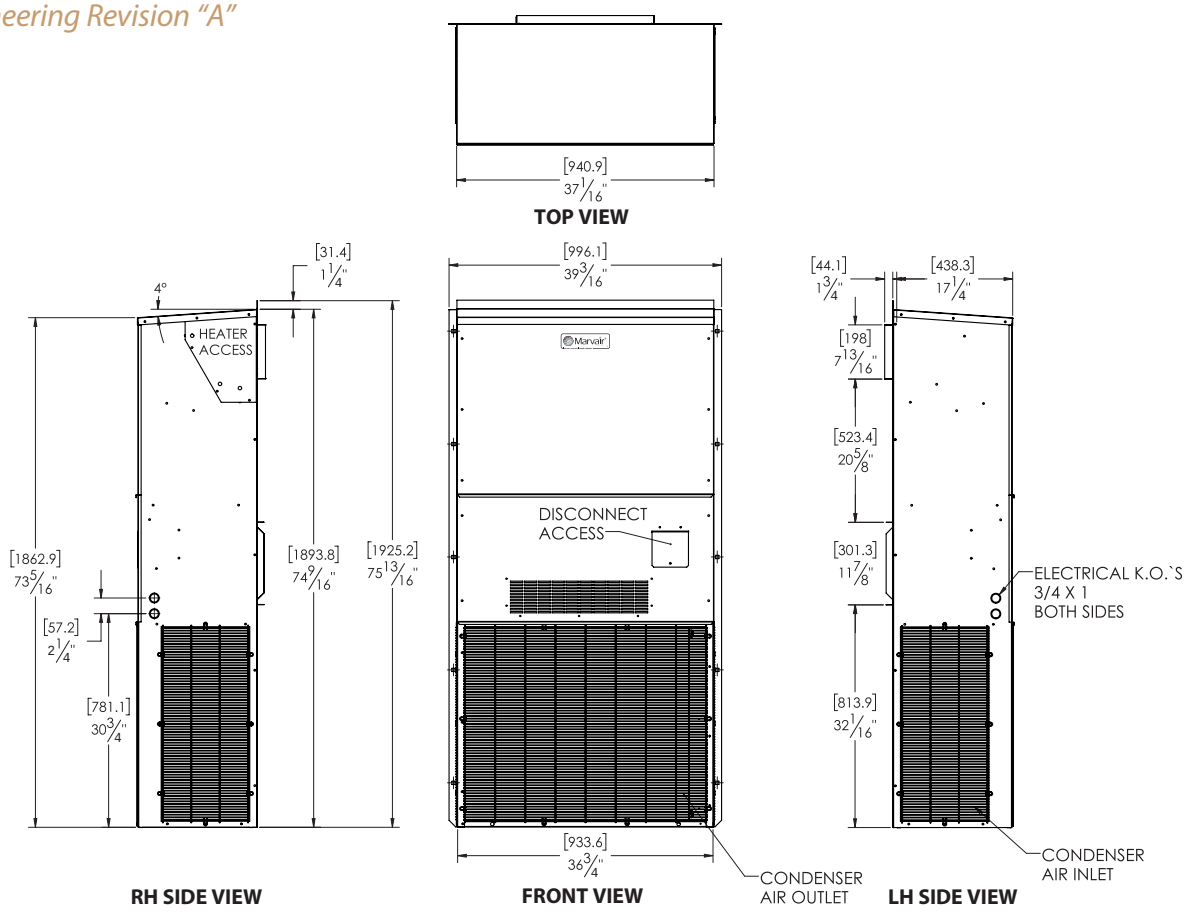

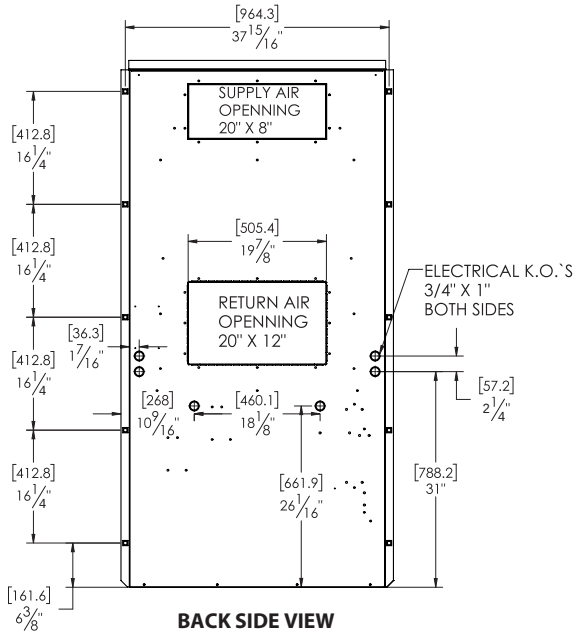

Installation Weight

MAH1020H/1024H & MAH2024H	Base	w/Economizer	w/3 Phase	w/Economizer & 3 Phase
Pounds	337	357	356	376
Kilograms	153	162	161	171

Filter Size

MAH1020H/1024H & MAH2024H	INCHES	MILLIMETERS	PART NUMBER	FILTERS PER UNIT	MERV RATING
RETURN AIR FILTER	16 x 25 x 2	406 x 635 x 51	80137	1	8 (STD)

Note: All overall outside dimensions are given with +/- .250" (6mm) tolerance.

Installation, Start-up and Service Instructions

CONTENTS

Page

SAFETY CONSIDERATIONS 1
Detection of Flammable Refrigerants 2
Ignition Source Mitigation 2
Ventilation Requirements 3
Evacuation, Removal, and Recovery 3
Charging 3
PRE-INSTALLATION 3
Moving and Storage 3
Rigging 3
Checks to Refrigerating Equipment 3
INSTALLATION 3
General 3
Uncrating 4
Accessories 4
Rated Indoor Airflow (cfm) 10
Unit Positioning 10
Unit Isolation 10
Refrigerant Piping 11
• REQUIREMENTS OF A2L REFRIGERANT PIPING
Refrigerant and Chilled Water Piping Access 11
Chilled Water Piping 13
Condensate Drain 14
Fan Motors and Drives 14
Power Supply and Wiring 14
• THREE STAGE OPERATION
Leak Dissipation System 20
• SEQUENCE OF OPERATION
• LEAK DISSIPATION SYSTEM SELF-TEST
• TROUBLESHOOTING
Connecting Ductwork 23
• DISCHARGE CONNECTION
• RETURN CONNECTIONS
• OUTDOOR-AIR INLET CONNECTIONS
Return-Air Filters 23
START-UP 24
40RLA and 40RLQ ONLY 24
Adjusting TXV for Superheat
(40RLA and 40RLQ only) 24
Fan Performance 24
MAINTENANCE 24
Quarterly Inspection
(and 30 days after initial start) 24
• INDOOR SECTION
Seasonal Maintenance 25
• AIR CONDITIONING
SERVICE 25
Panels 25
SUPPLY FAN 26
Supply Fan (Direct-Drive) 26
• EVALUATING MOTOR SPEED
• SELECTING FAN SPEED
• FAN FAULT DETECTION
• FREEZE PROTECTION
• TROUBLESHOOTING THE ECM MOTOR
Service Access for Supply Fan and Motor 30
• HORIZONTAL APPLICATIONS
• VERTICAL APPLICATIONS
Condensate Drains 33
Return-Air Filters 33
Chilled Water Coil Freeze Protection 33
Coil Removal 33
Cleaning Cooling Coil 33
Cleaning Insulation 34
Replacing Filters 34
FAN PERFORMANCE 34
General Fan Performance Notes 34
DECOMMISSIONING 53
START-UP CHECKLIST CL-1

SAFETY CONSIDERATIONS

Improper installation, adjustment, alteration, service, maintenance, or use can cause explosion, fire, electrical shock or other conditions which may cause personal injury or property damage. Consult a qualified installer, service agency, or your distributor or branch for information or assistance. The qualified installer or agency must use factory-authorized kits or accessories when modifying this product. Refer to the individual instructions packaged with the kits or accessories when installing.

Follow all safety codes. Wear safety glasses and work gloves. Use quenching cloths for brazing operations and have a fire extinguisher available. Read these instructions thoroughly and follow all warnings or cautions attached to the unit. Consult local building codes and appropriate national electrical codes (in U.S.A., ANSI/NFPA70, National Electrical Code (NEC); in Canada, CSA C22.1) for special requirements.

It is important to recognize safety information. This is the safety-alert symbol ⚠. When you see this symbol on the unit and in instructions or manuals, be alert to the potential for personal injury.

Understand the signal words DANGER, WARNING, CAUTION, and NOTE. These words are used with the safety-alert symbol. DANGER identifies the most serious hazards which **will** result in severe personal injury or death. WARNING signifies hazards which **could** result in personal injury or death. CAUTION is used to identify unsafe practices, which **may** result in minor personal

injury or product and property damage. NOTE is used to highlight suggestions which **will** result in enhanced installation, reliability, or operation.

⚠DANGER

ELECTRICAL SHOCK HAZARD

Failure to follow this warning will result in personal injury or death.

Before performing service or maintenance operations on unit, turn off main power switch to unit and install lock(s) and lockout tag(s). Ensure electrical service to rooftop unit agrees with voltage and amperage listed on the unit rating plate. Unit may have more than one power switch.

⚠WARNING

UNIT OPERATION AND SAFETY HAZARD

Failure to follow this warning could cause personal injury, death and/or equipment damage.

R-454B is an A2L refrigerant. All service equipment or components must be A2L refrigerant rated. Do not use non-A2L rated equipment or components on R-454B refrigerant equipment.

⚠WARNING

UNIT OPERATION AND SAFETY HAZARD

Failure to follow this warning could cause personal injury, death and/or equipment damage.

These air handling units are dedicated voltages. Unlike older air handler units the voltage of these units cannot be changed in the field.

⚠WARNING

PERSONAL INJURY AND ENVIRONMENTAL HAZARD

Failure to follow this warning could cause personal injury or death.

Relieve pressure and recover all refrigerant before system repair or final unit disposal.

Wear safety glasses and gloves when handling refrigerants. Keep torches and other ignition sources away from refrigerants and oils.

⚠CAUTION

CUT HAZARD

Failure to follow this caution may result in personal injury.

Sheet metal parts may have sharp edges or burrs. Use care and wear appropriate protective clothing, safety glasses, and gloves when handling parts and servicing units.

⚠CAUTION

UNIT OPERATION HAZARD

Failure to follow this caution could cause equipment damage.

Ensure voltage listed on unit data plate agrees with electrical supply provided for the unit.

⚠WARNING

RISK OF FIRE — FLAMMABLE REFRIGERANT

Do not use means to accelerate the defrosting process or to clean, other than those recommended by the manufacturer.

Do not pierce or burn.

Be aware that refrigerants may not contain an odor.

Unit Label Safety Symbols

	WARNING	This symbol shows that the appliance used a flammable refrigerant. If the refrigerant is leaked and exposed to an ignition source, there is a risk of fire.
	CAUTION	This symbol shows that the operation manual should be read carefully.
	CAUTION	This symbol shows that the service personnel should be handling the equipment with reference to the installation manual.
	CAUTION	This symbol shows that the information is available such as the operating manual or installation manual.

Detection of Flammable Refrigerants

Under no circumstances shall potential sources of ignition be used in the searching for or detection of refrigerant leaks. A halide torch (or any other detector utilizing a naked flame) shall not be used.

The following leak detection methods are deemed acceptable for all refrigerant systems.

Electronic leak detectors may be used to detect refrigerant leaks, but in the case of flammable refrigerants the sensitivity may not be adequate, or may need recalibration. Detection equipment shall be calibrated in a refrigerant-free area. Ensure that the detector is not a potential source of ignition and is suitable for the refrigerant used. Leak detection equipment shall be set at a percentage of the LFL of the refrigerant and shall be calibrated to the refrigerant employed, and the appropriate percentage of gas (25% max.) is confirmed.

Leak detection fluids are also suitable for use with most refrigerants but the use of detergents containing chlorine shall be avoided as the chlorine may react with the refrigerant and corrode the copper pipe-work.

Examples of leak detection fluids:

- Bubble method.
- Fluorescent method agents.

If a leak is suspected, all naked flames shall be removed/extinguished. If a leakage of refrigerant is found which requires brazing, all of the refrigerant shall be recovered from the system, or isolated (by means of shut off valves) in a part of the system remote from the leak. Removal of refrigerant shall be according to the following section.

Ignition Source Mitigation

No person carrying out work on an appliance containing A2L refrigerants which involves exposing any pipe work shall use any sources of ignition in such a way that can lead to the risk of fire or explosion. All possible ignition sources, including cigarette smoking, must be kept sufficiently far away from the site of work. This includes, but is not limited to, installation, repair, removal, and disposal of equipment.

Work shall be performed under a controlled procedure so as to minimize the risk of flammable gas or vapors being present while work is performed.

Ventilation Requirements

Ensure that the area is in the open or that it is adequately ventilated before breaking into the system or conducting any hot work. A degree ventilation shall continue during the period that work is carried out. The ventilation should safely disperse any released refrigerant and preferably expel it external atmosphere. Should an auxiliary ventilation system be present, check that it is operating correctly and no outlets are obstructed.

Evacuation, Removal, and Recovery

When breaking into the refrigerant circuit to make repairs - or for any other purpose - conventional procedures shall be used. However, for flammable refrigerants it is important that best practice be followed, since flammability is a consideration.

The following procedure shall be adhered to:

1. Safely remove refrigerant following local and national regulations.
2. Evacuate.
3. Purge the circuit with inert gas (optional for A2L refrigerants).
4. Evacuate (optional for A2L refrigerants).
5. Continuously flush or purge with inert gas when using flame to open circuit.
6. Open the circuit.

For appliances containing flammable refrigerants, purging shall be achieved by breaking the vacuum in the system with oxygen-free nitrogen and continuing to fill until the working pressure is achieved, then venting to atmosphere, and finally pulling down to a vacuum. This process may need to be repeated several times until the system is free from refrigerant. When the final oxygen-free nitrogen charge is used, the system shall be vented down to atmospheric pressure to enable work to take place.

The refrigerant charge shall be recovered into the correct recovery cylinders if venting is not allowed by local and national codes. Ensure that the correct number of cylinders for holding the total system charge is available. All cylinders to be used are designated for the recovered refrigerant and labelled for that refrigerant. Cylinders shall be complete with pressure-relief valve and associated shut-off valves in good working order. Empty recovery cylinders are evacuated and, if possible cooled before recovery occurs.

The recovery equipment shall be in good working order with a set of instructions concerning the equipment that is at hand and shall be suitable for the recovery of the flammable refrigerant. If in doubt, the manufacturer should be consulted. In addition, a set of calibrated weighing scales shall be available and in good working order. Hoses shall be complete with leak-free disconnect coupling and in good condition.

The recovered refrigerant shall be processed according to local legislation in the correct recovery cylinder, and the relevant waste transfer not arranged. Do not mix refrigerants in recovery units, and especially not in cylinders.

If compressors or compressor oils are to be removed, ensure that they have been evacuated to an acceptable level to make certain that flammable refrigerant does not remain within the lubricant. The compressor body shall not be heated by an open flame or other ignition sources to accelerate this process. When oil is drained from a system, it shall be carried out safely.

At no point during this process should the outlet for the vacuum pump be close to any potential ignition sources, and ventilation shall be available.

Charging

In addition to conventional charging procedures, the following requirements shall be followed.

- Ensure that contamination of different refrigerants does not occur when using charging equipment. Hoses or lines shall be as short as possible to minimize the amount of refrigerant contained in them.
- Cylinders shall be kept in an appropriate position according to the instructions.
- Ensure that the refrigerating system is earthed prior to charging the system with refrigerant.
- Label the system when charging is complete (if not already).
- Extreme care shall be taken not to overfill the refrigerating system.

Prior to recharging the system, it shall be pressure-tested with the appropriate purging gas. The system shall be leak tested on completion of charging but prior to commissioning. A follow up leak test shall be carried out prior to leaving the site.

PRE-INSTALLATION

1. The power supply (v, Ph, and Hz) must correspond to that specified on unit rating plate.
2. The electrical supply provided by the utility must be sufficient to handle load imposed by this unit.
3. Refer to Installation, General section (page 3) and Fig. 2 for locations of electrical inlets, condensate drain, duct connections, and required clearances before setting unit in place.
4. This installation must conform with local building codes and with the NEC (National Electrical Code) or ANSI (American National Standards Institute)/NFPA (National Fire Protection Association) latest revision. Refer to provincial and local plumbing or wastewater codes and other applicable local codes.

Moving and Storage

To transfer unit from truck to storage site, use a fork truck. Do not stack units more than 2 high during storage. If unit is to be stored for more than 2 weeks before installation, choose a level, dry storage site free from vibration. Do not remove plastic wrap or skid from unit until final installation.

Rigging

All 40RL Series units can be rigged by using the shipping skid. Units are shipped fully assembled. Do not remove shipping skids or protective covering until unit is ready for final placement; damage to bottom panels can result. Use slings and spreader bars as applicable to lift unit.

Checks to Refrigerating Equipment

The following checks shall be made to installations using A2L refrigerants:

- The actual charge is in accordance with the room size within which the refrigerant containing parts are installed.
- Supplementary ventilation machinery and outlets are operating adequately and are not obstructed.
- For appliances utilizing indirect refrigeration, the secondary circuit shall be checked for the presence of refrigerant.
- Warning markings on the equipment is visible and legible, with those that are not being either replaced or corrected.
- Refrigerant piping or components are installed in a position where they are unlikely to be exposed to any substance which may corrode them, unless the components are constructed of materials which are inherently resistant to being corroded or are suitably protected against said corrosion.

INSTALLATION

General

Allow the following clearances for service access and airflow:

- Rear: 2-1/2 ft (762 mm)
  NOTE: Units equipped with accessory electric heat may require additional rear clearance to allow service access.
- Front: 2-1/2 ft (762 mm)
- Right Side: 2-1/2 ft (762 mm)
- Left Side: 2-1/2 ft (762 mm)

For units equipped with an economizer, refer to the accessory installation instructions for additional clearance requirements. Be sure floor, wall, or ceiling can support unit weight (Tables 1-3). See Fig. 2 for dimensions.

Uncrating

Move unit as near as possible to final location before removing shipping skid.

Remove metal banding, top skid, and plastic wrap. Examine for shipping damage. If shipping damage is evident, file claim with transportation agency. Remove base skid just prior to actual installation.

Check nameplate information against available power supply and model number description in Fig. 1.

NOTE: Be sure to remove the foam shipping pad from the thermostatic expansion valve (TXV). Verify that it has been removed. See Fig. 3 for determining foam pad location.

Accessories

Refer to instructions shipped with each accessory for specific information.

Position:	1	2	3	4	5	6	7	8	9	10	11	12	13	14	15	16	17	18
Example:	4	0	R	L	A	A	1	2	A	2	A	6	–	U	A	0	A	0

Model Type
40RL = Vane Axial Fan Packaged Air-Handling Puron Advance™ R-454B Refrigerant

Type of Coil
A = Standard 4 Row DX
S = Chilled Water Coil
Q = Heat Pump Coil

Refrigeration Options
A = None

Nominal Tonage
07 = 6.0 Ton[a]
08 = 7.5 Ton
10 = 8.5 Ton[b]
12 = 10.0 Ton

Fan Motor Speed Controller
A = Two Speed Direct Drive - EcoBlue™ Vane Axial Fan

Indoor Fan Motor Options — ECM Motor
2 = Medium Static
3 = High Static

Coil Options
A = Standard Aluminum Fin/Copper Tube

Packaging Compliance
0 = Standard

Future Use
A = Standard

Cabinet Paint
0 = None
1 = Painted

Future Use
A = Standard

Control Box
U = Electromechanical Unit Control Board

Design Revision
– = Factory Design Revision

Voltage
1 = 575-3-60
5 = 208/230-3-60
6 = 460-3-60

NOTE(S):
[a] 40RLA and 40RLQ units only.
[b] 40RLS units only.

Fig. 1 — Model Number Nomenclature

UNIT	UNIT WEIGHT (W/TXV)
40RLA-07	399 lbs [181 kg]
40RLA-08	404 lbs [183 kg]
40RLA-12	425 lbs [193 kg]
40RLQ-07	381 lbs [173 kg]
40RLQ-08	385 lbs [175 kg]
40RLQ-12	427 lbs [194 kg]
40RLS-08	390 lbs [177 kg]
40RLS-10	391 lbs [177 kg]
40RLS-12	391 lbs [177 kg]

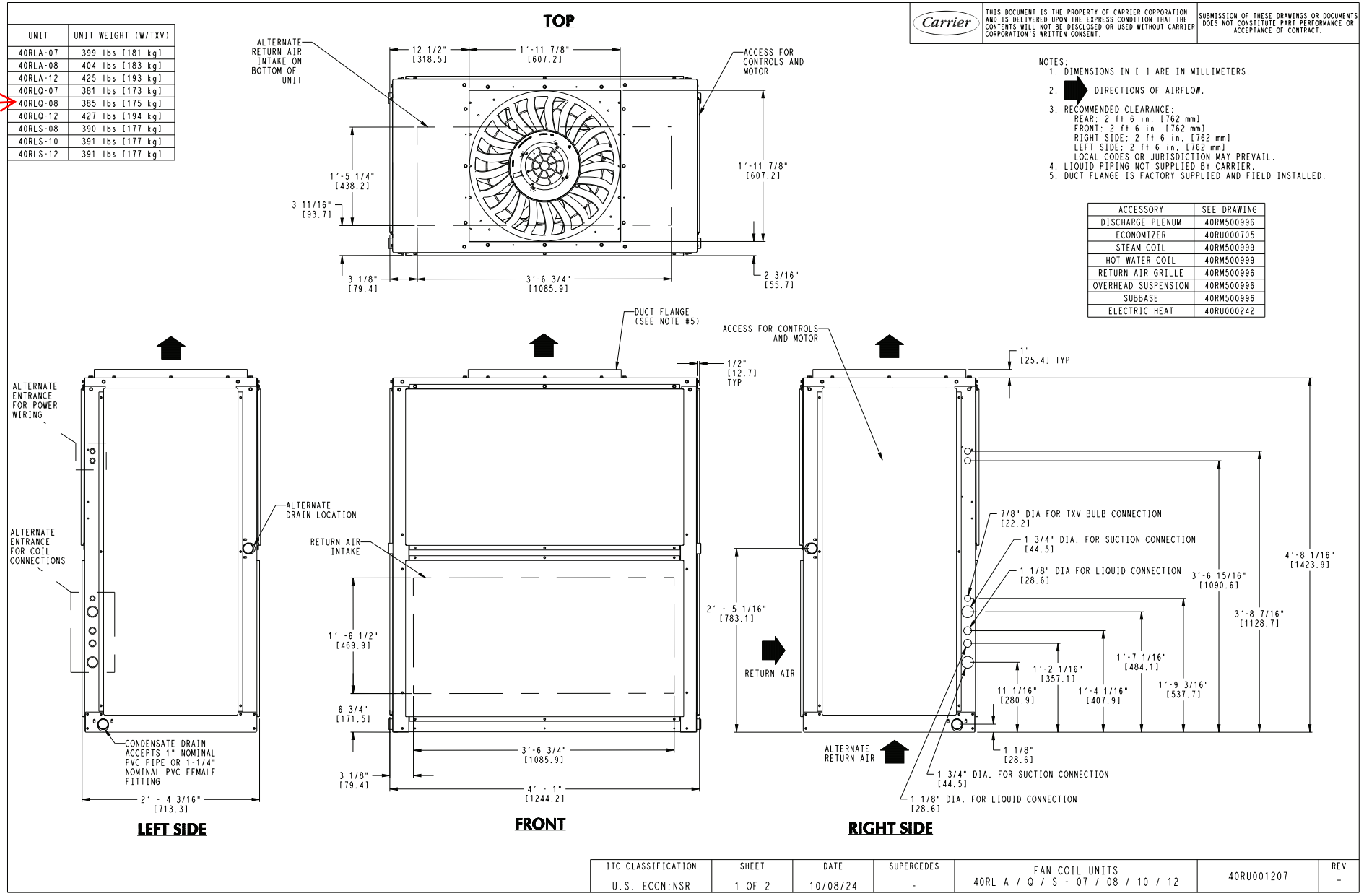

Fig. 2 — 40RL 07-12 Base Unit Dimensions

Carrier | THIS DOCUMENT IS THE PROPERTY OF CARRIER CORPORATION AND IS DELIVERED UPON THE EXPRESS CONDITION THAT THE CONTENTS WILL NOT BE DISCLOSED OR USED WITHOUT CARRIER CORPORATION'S WRITTEN CONSENT. | SUBMISSION OF THESE DRAWINGS OR DOCUMENTS DOES NOT CONSTITUTE PART PERFORMANCE OR ACCEPTANCE OF CONTRACT.

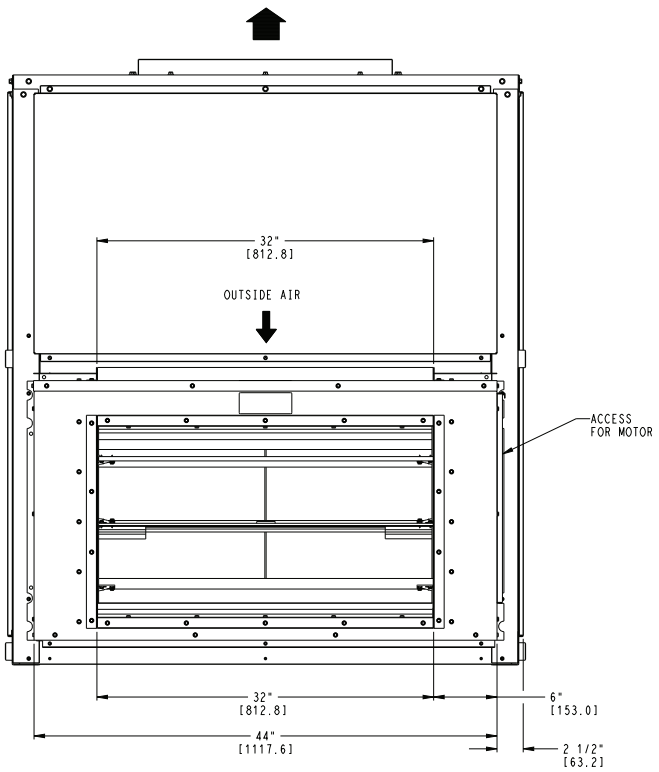

FRONT

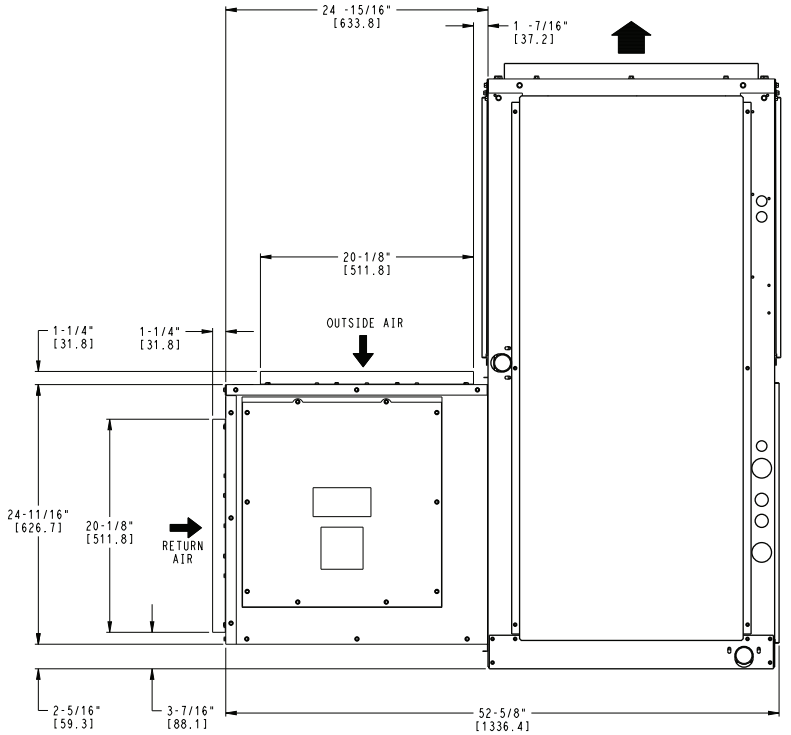

RIGHT SIDE

UNIT WITH ECONOMIZER

ITC CLASSIFICATION	SHEET	DATE	SUPERCEDES	FAN COIL UNITS		REV
U.S. ECCN:NSR	2 OF 2	10/08/24	-	40RL A / Q / S - 07 / 08 / 10 / 12	40RU001207	-

Fig. 2 — 40RL 07-12 Base Unit Dimensions (cont)

Table 1 — 40RLA 6-10 Ton Direct Expansion with Puron Advance™ Refrigerant Units

UNIT	40RLAA07	40RLAA08	40RLAA12
NOMINAL CAPACITY (Tons)	6	7.5	10
OPERATING WEIGHT (lb)			
Base Unit with TXV (4 Row)	399	404	425
Plenum	175	175	175
Economizer	185	185	185
Hot Water Coil[a]	195	195	195
Steam Coil[a]	215	215	215
FANS			
Qty...Diam. (in.)	1…23	1…23	1…23
Nominal Airflow (cfm)	2400	3000	4000
Airflow Range (cfm)	1800-3000	2250-3750	3000-5000
Nominal Motor HP (Standard Motor)[b]			
208/230-3-60 and 460-3-60	2.4	2.4	2.4
575-3-60	2.4	2.4	2.4
Motor Speed (rpm)			
208/230-3-60 and 460-3-60	2000	2000	2000
575-3-60	2000	2000	2000
REFRIGERANT[c]	Puron Advance™ (R-454B)	Puron Advance™ (R-454B)	Puron Advance™ (R-454B)
Shipping Charge (lb)	Nitrogen Purge	Nitrogen Purge	Nitrogen Purge
Metering Device	TXV	TXV	TXV
Operating Charge (lb) (approx per circuit)	3.0	3.0	1.5/1.5
DIRECT-EXPANSION COIL	Enhanced Copper Tubes, Aluminum Sine-Wave Fins		
Max Working Pressure (psig)	650	650	650
Material (Tube / Fin)	Al / Cu	Al / Cu	Al / Cu
Coil Type	RTPF	RTPF	RTPF
Face Area (sq ft)	6.67	8.33	10.01
No. of Splits	1	1	2
Split Type...Percentage	—	—	Face...50/50
No. of Circuits per Split	12	15	9
Rows...Fins/in.	4...15	4...15	4...15
STEAM COIL[a]			
Max Working Press. (psig at 260°F)	20	20	20
Total Face Area (sq ft)	6.67	6.67	6.67
Rows...Fins/in.	1...9	1...9	1...9
HOT WATER COIL[a]			
Max Working Pressure (psig)	150	150	150
Total Face Area (sq ft)	6.67	6.67	6.67
Rows...Fins/in.	2...8.5	2...8.5	2...8.5
Water Volume			
(gal)	8.3	8.3	8.3
(ft^3)	1.1	1.1	1.1
PIPING CONNECTIONS			
Quantity...Size (in.)			
DX Coil — Suction (ODF)	1...1-1/8	1...1-1/8	2...1-1/8
DX Coil — Liquid Refrig, (ODF)	1...5/8	1...5/8	2...5/8
Steam Coil, In (MPT)	1...2-1/2	1...2-1/2	1...2-1/2
Steam Coil, Out (MPT)	1...1-1/2	1...1-1/2	1...1-1/2
Hot Water Coil, In (MPT)	1...1-1/2	1...1-1/2	1...1-1/2
Hot Water Coil, Out (MPT)	1...1-1/2	1...1-1/2	1...1-1/2
Condensate (PVC)	1...5/8 ODM / 1-1/4 IDF		
FILTERS	Throwaway — Factory-Supplied		
Quantity...Size (in.)	4...16 x 24 x 2		
Access Location	Right or Left Side		

NOTE(S):

a. Field-installed accessory only.
b. 40RL units are medium static option.
c. Units are shipped without refrigerant charge.

LEGEND

DX — Direct Expansion
IDF — Inside Diameter, Female
ODF — Outside Diameter, Female
ODM — Outside Diameter, Male
TXV — Thermostatic Expansion Valve

Table 2 — 40RLQ 6-10 Ton Heat Pump Units

UNIT	40RLQA07	40RLQA08	40RLQA12
NOMINAL CAPACITY (Tons)	6	7.5	10
OPERATING WEIGHT (lb)			
Base Unit with TXV	381	385	427
Plenum	175	175	175
FANS			
Qty...Diam. (in.)	1…23	1…23	1…23
Nominal Airflow (cfm)	2400	2625	3000
Airflow Range (cfm)	1800-3000	2250-3750	3000-5000
Nominal Motor HP (Standard Motor)			
208/230-3-60 and 460-3-60	2.4	2.4	2.4
575-3-60	2.4	2.4	2.4
Motor Speed (rpm)			
208/230-3-60 and 460-3-60	2000	2000	2000
575-3-60	2000	2000	2000
REFRIGERANT	R-454B	R-454B	R-454B
Operating Charge (lb) (approx per circuit)[a]	3.0	3.0	2.0/2.0
DIRECT-EXPANSION COIL			
Max Working Pressure (psig)	650	650	650
Face Area (sq ft)	8.33	8.33	10.0
No. of Splits	1	1	2
No. of Circuits per Split	12	12	9
Split Type...Percentage	Face...100	Face...100	Face...50/50
Rows...Fins/in.	4...15	4...15	4...15
PIPING CONNECTIONS			
Quantity...Size (in.)			
DX Coil — Suction (ODF)	1...1-1/8	1...1-1/8	2...1-1/8
DX Coil — Liquid Refrigerant (ODF)	1...5/8	1...5/8	2...5/8
Steam Coil, In (MPT)	1...2-1/2	1...2-1/2	1...2-1/2
Steam Coil, Out (MPT)	1...1-1/2	1...1-1/2	1...1-1/2
Hot Water Coil, In (MPT)	1...1-1/2	1...1-1/2	1...1-1/2
Hot Water Coil, Out (MPT)	1...1-1/2	1...1-1/2	1...1-1/2
Condensate (PVC)	1...5/8 ODM / 1-1/4 IDF		
FILTERS			
Quantity...Size (in.)	4...16 x 24 x 2	4...16 x 24 x 2	4...16 x 24 x 2
Access Location	Either Side	Either Side	Either Side
STEAM COIL[b]			
Max Working Pressure (psig at 260°F)	20	20	20
Total Face Area (sq ft)	6.67	6.67	6.67
Rows...Fins/in.	1...9	1...9	1...9
HOT WATER COIL[b]			
Max Working Pressure (psig)	150	150	150
Total Face Area (sq ft)	6.67	6.67	6.67
Rows...Fins/in.	2...8.5	2...8.5	2...8.5
Water Volume			
(gal)	8.3	8.3	8.3
(ft^3)	1.1	1.1	1.1

NOTE(S):

a. Units are shipped without refrigerant charge.
b. Field installed accessory only.

LEGEND

DX — Direct Expansion
IDF — Inside Diameter, Female
ODF — Outside Diameter, Female
ODM — Outside Diameter, Male
TXV — Thermostatic Expansion Valve

Table 3 — 40RLS Physical Data — Chilled Water Units

UNIT	40RLSA08	40RLSA10	40RLSA12
NOMINAL CAPACITY (Tons)	7.5	8.5	10
OPERATING WEIGHT (lb)			
Base Unit with TXV (4 Row)	390	391	391
Plenum	175	175	175
Economizer	185	185	185
Hot Water Coil[a]	195	195	195
Steam Coil[a]	215	215	215
FANS			
Qty...Diam. (in.)	1…23	1…23	1…23
Nominal Airflow (cfm)	3000	3400	4000
Airflow Range (cfm)	2250-3750	2250-4250	3000-5000
Nominal Motor HP (Standard Motor)[b]			
208/230-3-60 and 460-3-60	2.4	2.4	2.4
575-3-60	2.4	2.4	2.4
Motor Speed (rpm)			
208/230-3-60 and 460-3-60	2000	2000	2000
575-3-60	2000	2000	2000
CHILLED WATER COIL	Enhanced Copper Tubes, Aluminum Sine-Wave Fins		
Max Working Pressure (psig)	435	435	435
Face Area (sq ft) — Upper	8.3	9.0	9.8
Face Area (sq ft) — Lower	—	—	—
Rows...Fins/in.	3...15	3...15	3...15
Water Volume			
(gal)	3.0	3.3	3.5
(ft^3)	0.40	0.47	0.46
STEAM COIL[a]			
Max Working Pressure			
(psig at 260°F)	20	20	20
Total Face Area (sq ft)	6.67	6.67	6.67
Rows...Fins/in.	1...9	1...9	1...9
HOT WATER COIL[a]			
Max Working Press. (in. wg)	150	150	150
Total Face Area (sq ft)	6.67	6.67	6.67
Rows...Fins/in.	2...8.5	2...8.5	2...8.5
Water Volume			
(gal)	8.3	8.3	8.3
(ft^3)	1.1	1.1	1.1
PIPING CONNECTIONS			
Quantity...Size (in.)			
Chilled Water — In	1...1-3/8 ODF	1...1-3/8 ODF	1...1-3/8 ODF
Chilled Water—Out	1...1-3/8 ODF	1...1-3/8 ODF	1...1-3/8 ODF
Steam Coil, In (MPT)	1...2-1/2	1...2-1/2	1...2-1/2
Steam Coil, Out (MPT)	1...1-1/2	1...1-1/2	1...1-1/2
Hot Water Coil, In (MPT)	1...1-1/2	1...1-1/2	1...1-1/2
Hot Water Coil, Out (MPT)	1...1-1/2	1...1-1/2	1...1-1/2
Condensate (PVC)	1...5/8 ODM / 1-1/4 IDF		
FILTERS	Throwaway — Factory-Supplied		
Quantity...Size (in.)	4...16 x 24 x 2		
Access Location	Right or Left Side		

NOTE(S):

a. Field installed accessory only.
b. 40RL units are medium static option.

LEGEND

IDF — Inside Diameter, Female
ODF — Outside Diameter, Female
ODM — Outside Diameter, Male

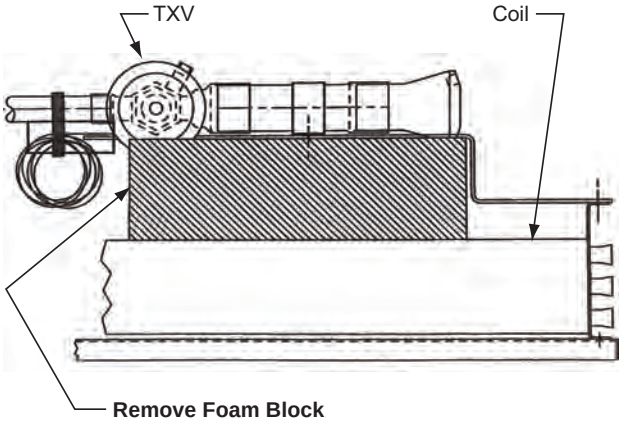

LEGEND
TXV — Thermostatic Expansion Valve

Fig. 3 — Foam Block Location

Rated Indoor Airflow (cfm)

Tables 4-6 list the rated indoor airflow used for the AHRI (Air-Conditioning, Heating, and Refrigeration Institute) efficiency rating for the units covered in this document.

Table 4 — 38AXZ with 40RLA

MODEL NUMBER	FULL LOAD AIRFLOW (CFM)
38AXZM/N07 — 40RLA*07	2400
38AXZM/N08 — 40RLA*08	3000
38AXZM/N12 — 40RLA*12	4000

Table 5 — 38AXD with 40RLA

MODEL NUMBER	FULL LOAD AIRFLOW (CFM)
38AXDT/U12 — 40RLA*12	4000

Table 6 — 38AXQ with 40RLQ

MODEL NUMBER	FULL LOAD COOLING AIRFLOW (CFM)	FULL LOAD HEATING AIRFLOW (CFM)
38AXQM/N07 — 40RLQ*07	2400	2400
38AXQM/N08 — 40RLQ*08	3000	3000
38AXQM/N12 — 40RLQ*12[a]	3500	3000

NOTE(S):

a. The 38AXQM/N12 — 40RLQ*12 has different rated airflows for heating and cooling. Set airflow while unit is in cooling mode, when unit switches to heating, the controls will automatically adjust airflow.

Unit Positioning

The unit can be mounted on the floor for vertical application with return air entering the face of the unit and supply air discharging vertically through the top of the unit. The unit can also be applied in a horizontal arrangement with return air entering horizontally and the supply air discharging horizontally. When applying the unit in a horizontal arrangement, ensure the condensate drain pan is located at the bottom center of the unit for adequate condensate disposal. See Fig. 4 for condensate connections for each unit position.

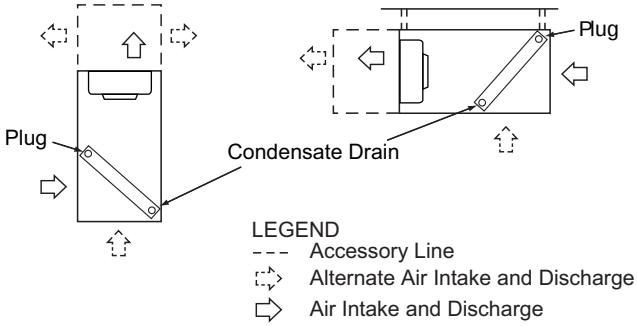

Fig. 4 — Typical Unit Positioning

IMPORTANT: Do NOT attempt to install unit with return air entering top panel of unit. Condensate will not drain from unit.

Typical positioning and alternate return air locations are shown in Fig. 4. Alternate return air locations can be used by moving the unit panel from the alternate return air location to the standard return air location. Refer to overhead suspension accessory drawing (see Fig. 5) for preferred suspension technique. The unit needs support underneath to prevent sagging.

Unit Isolation

Where extremely quiet operation is essential, install isolators between floor and base of unit, or between ceiling and top section of unit.

Be sure that unit is level and adequately supported. Use channels at front and sides of unit for reference points when leveling.

IMPORTANT: Do not bury refrigerant piping underground.

OVERHEAD SUSPENSION ACCESSORY
UNIT SIZE 6-10 TONS

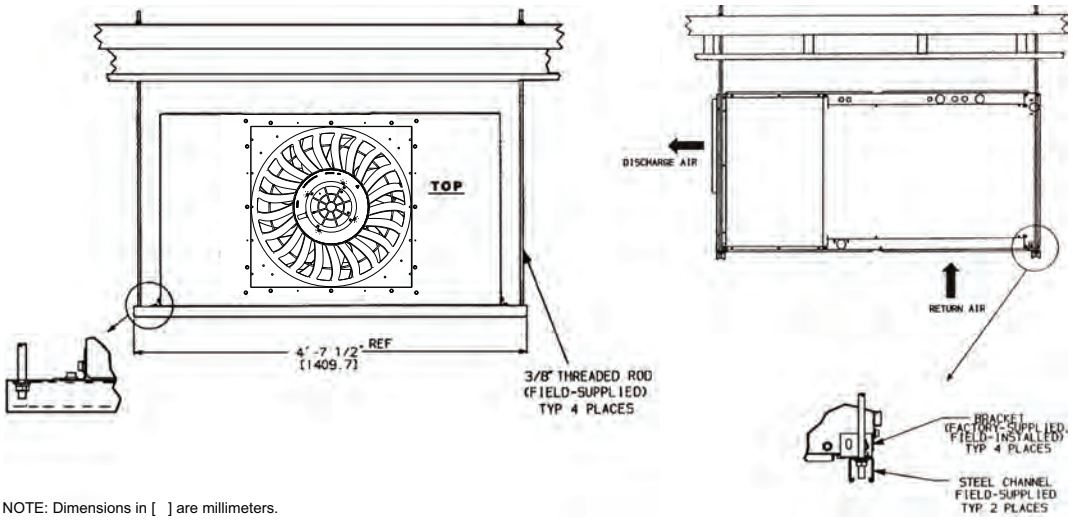

NOTE: Dimensions in [ ] are millimeters.

Fig. 5 — Preferred Suspension Technique

Refrigerant Piping

See Tables 1-3 for refrigerant pipe connection sizes. For ease in brazing, it is recommended that all internal solder joints be made before unit is placed in final position.

The 40RL direct-expansion units have internal factory-installed thermostatic expansion valves (TXVs), distributors, and nozzles for use with R-454B. See Table 7 for part numbers. Knockouts are provided in the unit corner posts for 40RL refrigerant piping. See Fig. 6, which also lists recommended knockouts and access holes to use for each 40RL unit size. Recommended fittings are listed in Table 8.

The sensor bulb capillary tubes must be routed from the TXVs inside the unit through one of the piping access holes. Clamp the TXV sensor bulb on a vertical portion of the suction line, outside the unit. (See Fig. 7.)

Requirements of A2L Refrigerant Piping

The following must be adhered to for refrigerant piping:

- Installation of pipe-work must be kept to a minimum, with minimum piping lengths whenever possible.
- Connecting joints shall only be made in easily accessible locations for service purposes.
- There shall be no bends in pipe-work lines with a centerline bend radius less than 2.5 times the external diameter.
- Pipework must be protected from potential damage during normal operation, service or maintenance.

Refrigerant and Chilled Water Piping Acces

The 40RL Series units come with standard knockouts for refrigerant and chilled water piping. These knockouts are located on both sides of the unit for installation flexibility. The standard knockouts provide sufficient access to the unit's coils for all 40RLA*07, 08, and 12 and 40RLQ*07, 08, and 12 units. 40RLS*08 and units require additional holes that must be field-fabricated to accommodate the piping. See Fig. 6 for the positions and dimensions of the additional access holes required for 40RLS units. Recommended access hole use is also listed for all units. Note that Fig. 6 shows the access holes on the control-box side of the unit; this is the side of the unit with the coil headers, so it is used most often for piping access.

NOTE: Be sure to remove the foam shipping pad from the TXV. Verify that it has been removed. (See Fig. 3.)

IMPORTANT: Never attach the sensor to the suction manifold. Do NOT mount the sensor on a trapped portion of the suction line.

The 40RL Series evaporator coils have a face-split design. Ensure that lower circuit of coil is first on/last off when connected to the condensing unit and/or system controls. (See Fig. 8.)

External TXV equalizer connections are provided and factory-brazed into the coil suction manifolds.

If suction line must be horizontal, clamp bulb to suction line at least 45 degrees above bottom, at approximately the 4 o'clock or 8 o'clock position. (See Fig. 9.)

Table 7 — Factory-Installed Nozzle and Distributor Data

UNIT	COIL TYPE STD	TXV QTY...PART NO.	DISTRIBUTOR QTY... PART NO.	FEEDER TUBES PER DISTRIBUTOR[a] QTY...SIZE (in.)	NOZZLE QTY...PART NO.
40RLA*07	4 Row	1...BBIZE—4—GA	1...1135	12...1/4	1...G4
40RLQ*07	4 Row	1...BBIZE—4—GA	1...1136	15...1/4	1...G5
40RLA*08	4 Row	1...BBIZE—6—GA	1...1136	15...1/4	1...G5
40RLQ*08	4 Row	1...BBIZE—8—GA	1...1113	12...3/16	1...G5
40RLA*12	4 Row	2...HXAE-5-KX	2...1135	9...1/4	2...G3
40RLQ*12	4 Row	2...BBIZE—5—GA	2...1113	9...3/16	2...G3

NOTE(S):

a. Feeder tube size is 1/4 in. (6.35 mm).

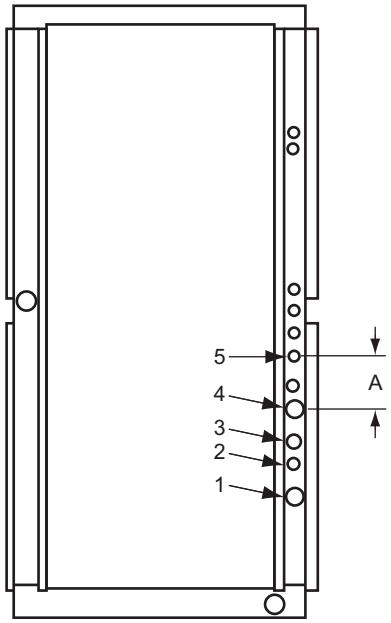

Field-Fabricated Access Holes

UNIT	USE HOLE NUMBERS[a]	FIELD-FABRICATED HOLE DIAMETERS in. (mm)			FIELD-FABRICATED HOLE POSITION DIMENSIONS, in. (mm)		
		NO. 5	NO. 6	NO.7	A	B	C
40RLA*07, 08 40RLQ*07,08	1, 3	—	—	—	—	—	—
40RLA*12 40RLQ*12	1, 2, 3, 4	—	—	—	—	—	—
40RLS*08, 10, 12	4, 5	1-3/4 (44.5)	—	—	6.25 (158.8)	—	—

NOTE(S):

a. Access hole knockouts 1-4 are factory-supplied.

Fig. 6 — Refrigerant and Chilled Water Piping Access Holes

Table 8 — Fitting Requirements

UNIT	ACCESS HOLE NO.[a]	CONNECTION TYPE	CIRCUIT	FITTING REQUIRED[b] (in.)
40RLA*07 40RLQ*07	1	Suction	—	1-1/8 Street Elbow 1-1/8 Nipple, 10-5/8 L 1-1/8 Long Radius Elbow
	3	Liquid	—	5/8 Street Elbow 5/8 Nipple, 8-5/8 L 5/8 Long Radius Elbow
40RLA*08 40RLQ*08	1	Suction	—	1-1/8 Street Elbow 1-1/8 Nipple, 8-5/8 L 1-1/8 Long Radius Elbow
	3	Liquid	—	5/8 Street Elbow 5/8 Nipple, 8-5/8 L 5/8 Long Radius Elbow
40RLS*08 40RLS*10 40RLS*12	4	Return	—	1-3/8 Nipple, 4-3/8 L 1-3/8 Long Radius Elbow 1-3/8 Nipple, 7-3/8 L 1-3/8 Long Radius Elbow
	5	Supply	—	1-3/8 Nipple, 6-5/8 L 1-3/8 Long Radius Elbow
40RLA*12	1	Suction	Lower	(2) 1-1/8 Street Elbow
	2	Liquid	Lower	5/8 Street Elbow 5/8 Nipple, 8-1/2 L 5/8 Long Radius Elbow
	3	Liquid	Upper	5/8 Street Elbow 5/8 Nipple, 13-1/2 L 5/8 Long Radius Elbow
	4	Suction	Upper	1-1/8 Nipple, 5-3/4 L 1-1/8 Long Radius Elbow 1-1/8 Nipple, 12 L 1-1/8 Long Radius Elbow
40RLQ*12	1	Suction	Lower	(2) 1-1/8 Street Elbow
	2	Liquid	Lower	5/8 Street Elbow 5/8 Nipple, 5-1/2 L 5/8 Long Radius Elbow
	3	Liquid	Upper	5/8 Street Elbow 5/8 Nipple, 10-1/2 L 5/8 Long Radius Elbow
	4	Suction	Upper	1-1/8 Nipple, 5-5/8 L 1-1/8 Long Radius Elbow 1-1/8 Nipple, 12 L 1-1/8 Long Radius Elbow

NOTE(S):

a. See Fig. 6 for access hole location by number.
b. Fittings are listed in order from header or tee stub connection out to access hole in corner support post.

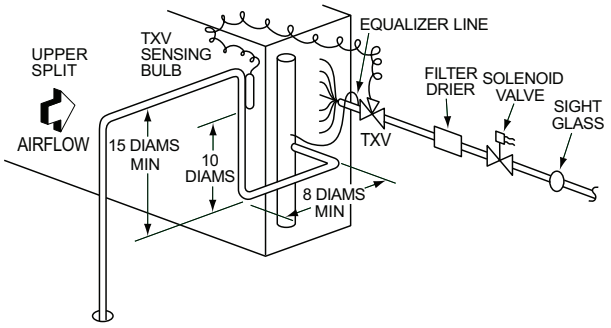

Single Circuit Coil Piping Configuration - 6-7.5 ton units
For single compressor condensing units.

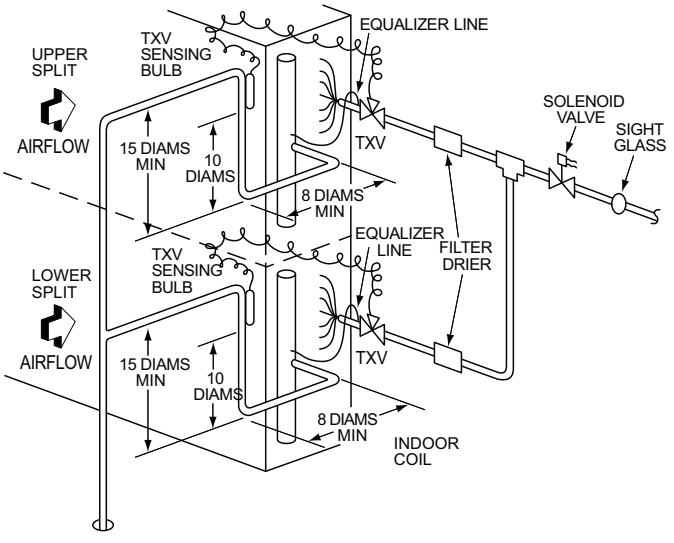

Dual Circuit Coil Piping Configuration - 10 ton units
For single compressor condensing units

LEGEND
TXV — Thermostatic Expansion Valve
NOTE: Component location arrangement shown for field installation of sight glasses, solenoid valves, filter driers, and TXV sensing bulbs. The TXVs and equalizer lines are factory-installed.

Fig. 7 — Face-Split Coil and Liquid Line Piping (Typical)

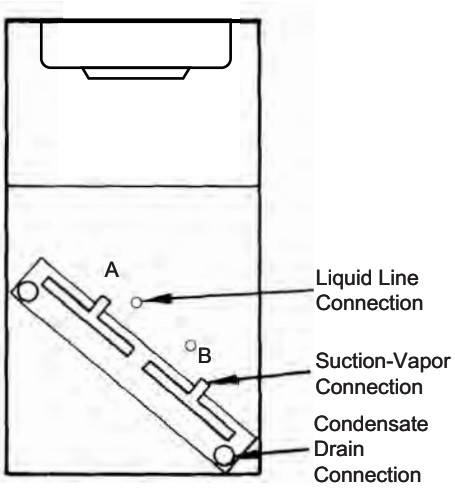

First On/Last Off = B
Vertical Installation

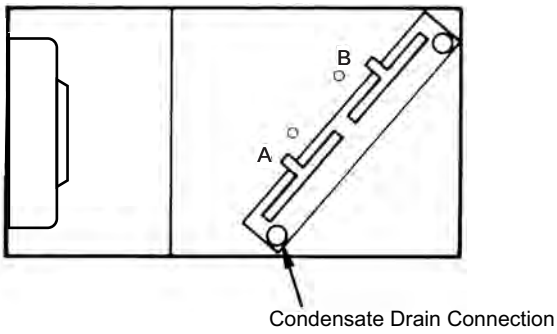

First On/Last Off = A
Horizontal Installation

Fig. 8 — Typical Evaporator Coil Connections (40RL)

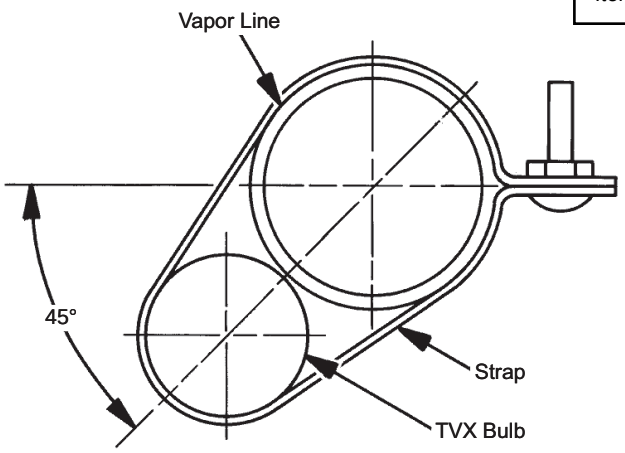

LEGEND

TXV — Thermostatic Expansion Valve

NOTE: The 8 o'clock position is shown above.

Fig. 9 — TXV Sensing Bulb Location

Chilled Water Piping

See Table 3 for chilled water connection sizes. For ease in brazing, it is recommended that all internal solder joints be made before unit is placed in final position.

Knockouts are provided in the unit corner posts for 40RLS refrigerant piping. Additional field-fabricated access holes are required for 40RLS chilled water piping. See Fig. 6, which lists recommended knockouts and access holes to use for each 40RLS unit size.

To size, design, and install chilled water piping, consult the Carrier System Design manual. See Fig. 10 for an example of a typical installation. Recommended fittings are listed in Table 8.

To access 40RLS coil vents and drains, remove the unit side panel over the coil header. Vent and drain plugs are on the top and bottom of header, respectively. See the Service section for information on preventing coil freeze-up during winter.

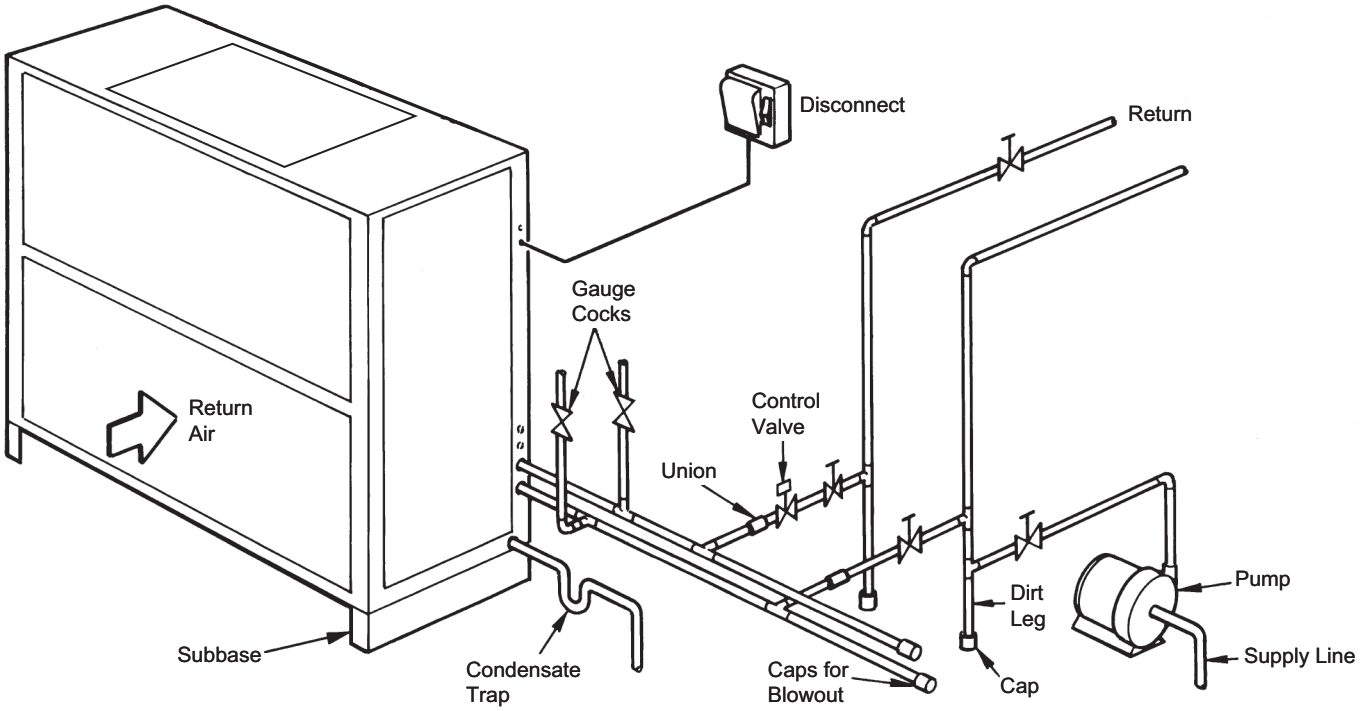

Fig. 10 — Typical 40RLS Chilled Water Piping

Condensate Drain

Install a trapped condensate drain line to unit connection as shown in Fig. 11. The unit drain connection is a PVC stub. (See Fig. 12.) Some areas may require an adapter to connect to either galvanized steel or copper pipe. For these applications, install a field-supplied threaded PVC adapter.

NOTE: A trap must be installed in the condensate drain line to ensure that the static pressure of fans is balanced with the water column in the drain line and that condensate can drain completely from pan. Without a trap, air can be drawn up drain line until water level in condensate pan becomes equal to static pressure created by fans, preventing complete drainage. Conditions will worsen as filters become dirty.

Install clean-out plugs in trap. Pitch drain line downward to an open floor drain or sump. Provide service clearance around drain line to permit removal of unit panels. Observe all local sanitary codes.

As shipped, the unit's condensate drain pan is NOT sloped towards the drain connection. The pan slope must be changed to pitch towards the side of the unit with the drain connection. (See Fig. 12.) Loosen the 2 screws next to the drain outlet at both ends of the unit, push drain pan down in the slots near the drain connection, and up in the slots on the opposite end. Re-tighten screws. The pan should have a pitch of at least 1/4 in. over its length toward the drain connection.

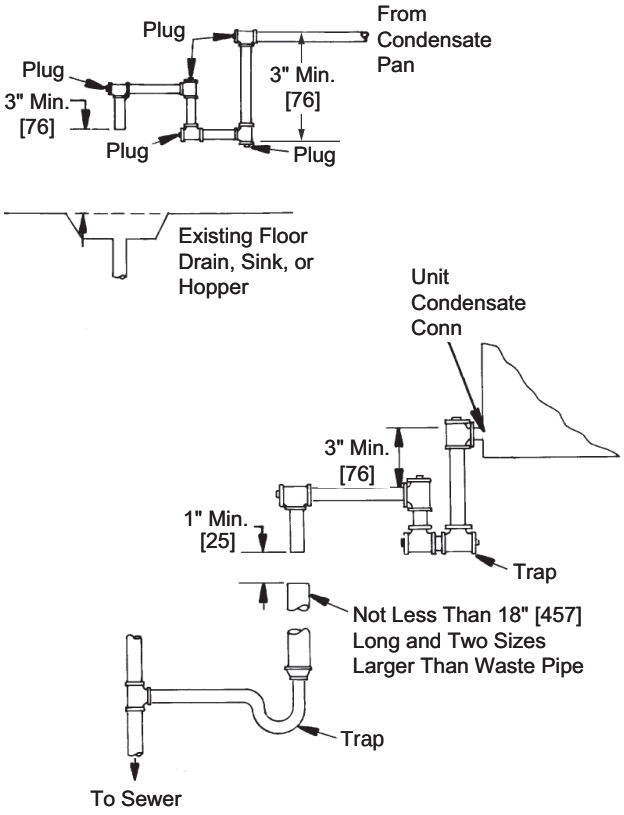

NOTE: Dimensions in [ ] are in millimeters

Fig. 11 — Condensate Drain

Fan Motors and Drives

Motor and drive packages are factory installed in all units. The motor and drive packages consist of the following items:

1 — ECM fan motor

1 — EcoBlue™ direct drive vane axial fan system

For instructions on setting the fan speed see Supply Fan (Direct Drive) on page 26.

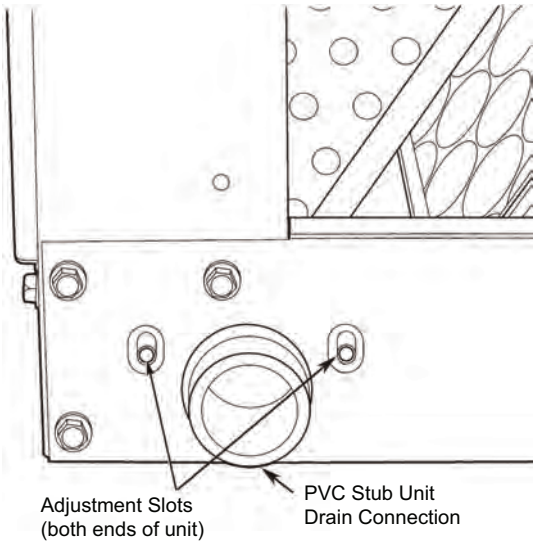

Fig. 12 — Drain Pan Slope Adjustment

Power Supply and Wiring

Check the unit data plate to ensure that available power supply matches electrical characteristics of the unit. Provide a disconnect switch with an integrated lock-out feature of size required to provide adequate fan motor starting current. See Table 9 for unit electrical data. See Table 10 for recommended torque of the ground lug screw when using approved electrical wire for the electrical ground. Route the field power wiring in through the opening designated in Fig. 14.

⚠ WARNING

ELECTRICAL SHOCK HAZARD

Failure to follow this warning could result in personal injury or death.

Do not use gas piping as an electrical ground. Unit cabinet must have an uninterrupted, unbroken electrical ground to minimize the possibility of personal injury if an electrical fault should occur. This ground may consist of electrical wire connected to unit ground lug in control compartment, or conduit approved for electrical ground when installed in accordance with NEC (National Electrical Code); ANSI/NFPA 70, latest edition (in Canada, Canadian Electrical Code CSA [Canadian Standards Association] C22.1), and local electrical codes.

⚠WARNING

FIRE HAZARD

Failure to follow this warning could result in personal injury, death, or property damage.

Do not connect aluminum wire between disconnect switch and fan coil unit. Use only copper wire. (See Fig. 13.)

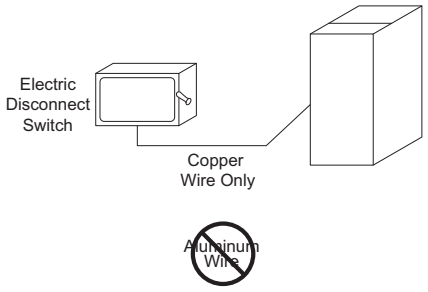

Fig. 13 — Disconnect Switch and Unit

Table 9 — Electrical Data, Standard Motors — Two Speed

UNIT	NOMINAL V-PH-Hz	IFM TYPE	UNIT VOLTAGE RANGE		FAN MOTOR			POWER SUPPLY	
			Min.	Max.	Hp	kW	FLA	Minimum Circuit Amps (MCA)	Maximum Overcurrent Protection (MOCP)
40RLA*07 40RLQ*07	208/230-3-60	MED	187	253	2.4	1.76	6.4/5.8	8/8	15/15
		HIGH	187	253	3.0	2.24	7.5/6.7	10/9	15/15
	460-3-60	MED	414	506	2.4	1.76	3.0	4	15
		HIGH	414	506	3.0	2.24	3.5	5	15
	575-3-60	MED	518	632	2.4	1.76	2.5	4	15
		HIGH	518	632	3.0	2.24	3.0	4	15
40RLA*08 40RLS*08 40RLQ*08	208/230-3-60	MED	187	253	2.4	1.76	6.4/5.8	8/8	15/15
		HIGH	187	253	3.0	2.24	7.5/6.7	10/9	15/15
	460-3-60	MED	414	506	2.4	1.76	3.0	4	15
		HIGH	414	506	3.0	2.24	3.5	5	15
	575-3-60	MED	518	632	2.4	1.76	2.5	4	15
		HIGH	518	632	3.0	2.24	3.0	4	15
40RLS*10	208/230-3-60	MED	187	253	2.4	1.76	6.4/5.8	8/8	15/15
		HIGH	187	253	3.0	2.24	7.5/6.7	10/9	15/15
	460-3-60	MED	414	506	2.4	1.76	3.0	4	15
		HIGH	414	506	3.0	2.24	3.5	5	15
	575-3-60	MED	518	632	2.4	1.76	2.5	4	15
		HIGH	518	632	3.0	2.24	3.0	4	15
40RLA*12 40RLS*12 40RLQ*12	208/230-3-60	MED	187	253	2.4	1.76	6.4/5.8	8/8	15/15
		HIGH	187	253	3.0	2.24	7.5/6.7	10/9	15/15
	460-3-60	MED	414	506	2.4	1.76	3.0	4	15
		HIGH	414	506	3.0	2.24	3.5	5	15
	575-3-60	MED	518	632	2.4	1.76	2.5	4	15
		HIGH	518	632	3.0	2.24	3.0	4	15

LEGEND

FLA — Full Load Amps
HACR — Heating, Air Conditioning, and Refrigeration

NOTES:

1. Minimum circuit amps (MCA) and maximum overcurrent protection (MOCP) values are calculated in accordance with The NEC. Article 440.
2. Motor FLA values are established in accordance with Underwriters Laboratories (UL) Standard 60335-2-40.
3. Unbalanced 3-Phase Supply Voltage
   Never operate a motor where a phase imbalance in supply voltage is greater than 2%. Use the formula in the example (see column to the right) to determine the percentage of voltage imbalance.
4. Installation with Accessory Electric Heaters
   Size the Field Power Wiring between the heater TB1 and the 40RL indoor fan motor per NEC Article 430-28 (1) or (2) (depends on length of conduit between heater enclosure and 40RL power entry location). Install wires in field-installed conduit.

$$\text{\% Voltage Imbalance} = 100 \times \frac{\text{max voltage deviation from average voltage}}{\text{average voltage}}$$

Example: Supply voltage is 230-3-60

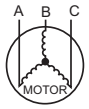

AB = 224 v
BC = 231 v
AC = 226 v

$$\text{Average Voltage} = \frac{(224 + 231 + 226)}{3} = \frac{681}{3} = 227$$

Determine maximum deviation from average voltage.

(AB) 227-224 = 3 v

(BC) 231-227 = 4 v

(AC) 227-226 = 1 v

Maximum deviation is 4 v.

Determine percent of voltage imbalance.

$$\text{\% Voltage Imbalance} = 100x \frac{4}{227} = 1.78\%$$

This amount of phase imbalance is satisfactory as it is below the maximum allowable 2%.

IMPORTANT: If the supply voltage phase imbalance is more than 2%, contact your local electric utility company immediately.

Table 10 — Recommended Torque of Ground Lug Field Connection

AWG	TORQUE (in.-lb)
16	35±4
14	35±4
12	35±4
10	35±4
8	40±5
6	45±5.5
4	45±5.5
2	50±6
0	50±6
00	50±6

Install disconnect switch and power wiring in accordance with all applicable local codes. See Fig. 13-15 and the unit wiring diagram label (Fig. 18). For units with motor sizes less than 5 Hp (3.7 kW), connect power wiring to unit with no. 10 ring terminal. For units with motor sizes of 5 Hp (3.7 kW) or more, connect power wiring with 1/4 in. ring terminal.

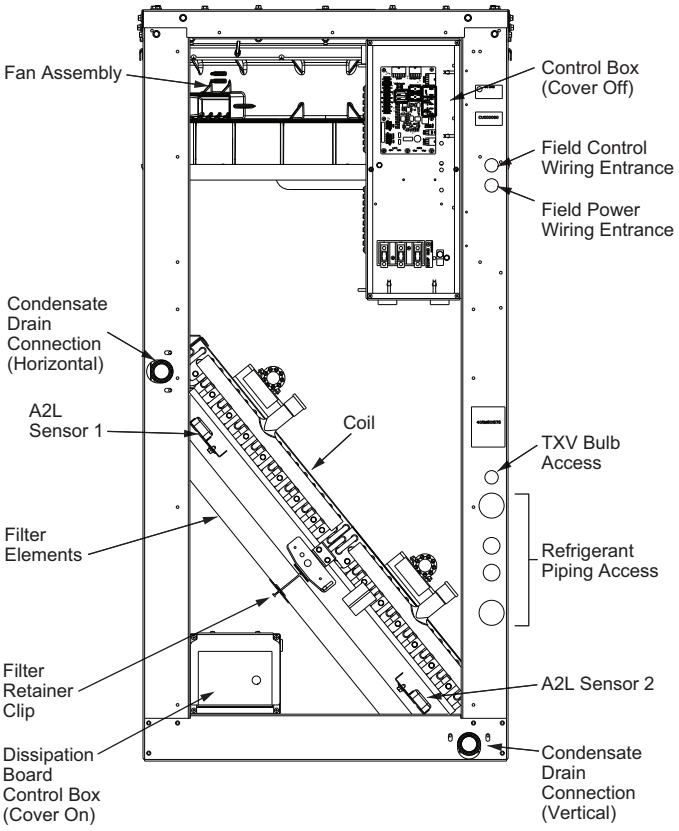

Fig. 14 — Wiring and Service Access (Side Panel Removed)

Fan motors are factory-installed on all units.

The control box contains a Unit Control Board (UCB) that receives thermostat commands from the thermostat (through the Thermostat Connection Board) and, outputs these commands to the condensing unit (through the Indoor Connection Board) as well as a high voltage terminal block.

Complete 24-v control circuit wiring. Wire the thermostat to the Thermostat Connection Board terminal strip (TSTAT CB), according to Fig. 15 and the unit wiring diagram label (see Fig. 18). If the air handler is part of a split system, complete the wiring from the condensing unit to the Indoor Connection Board terminal strip (IDCB). Refer to Fig. 15 and the unit wiring diagram label. Route the field control wiring in through the opening designated in Fig. 14.

NOTE: The control box may have some additional components; see Fig. 16 and 17.

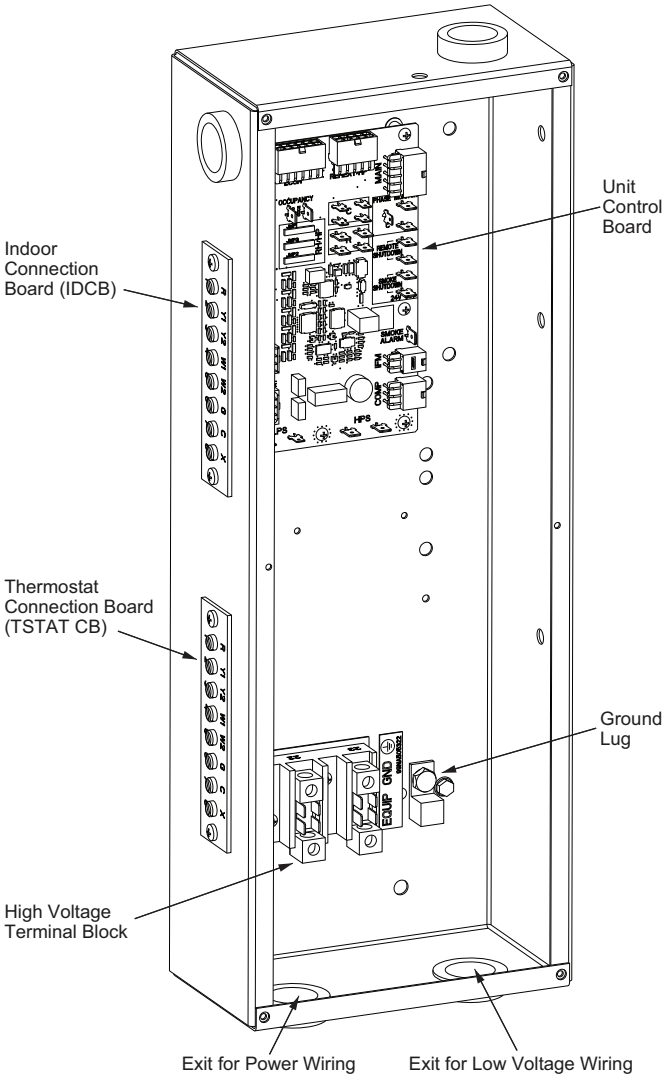

Fig. 15 — Unit Control Box

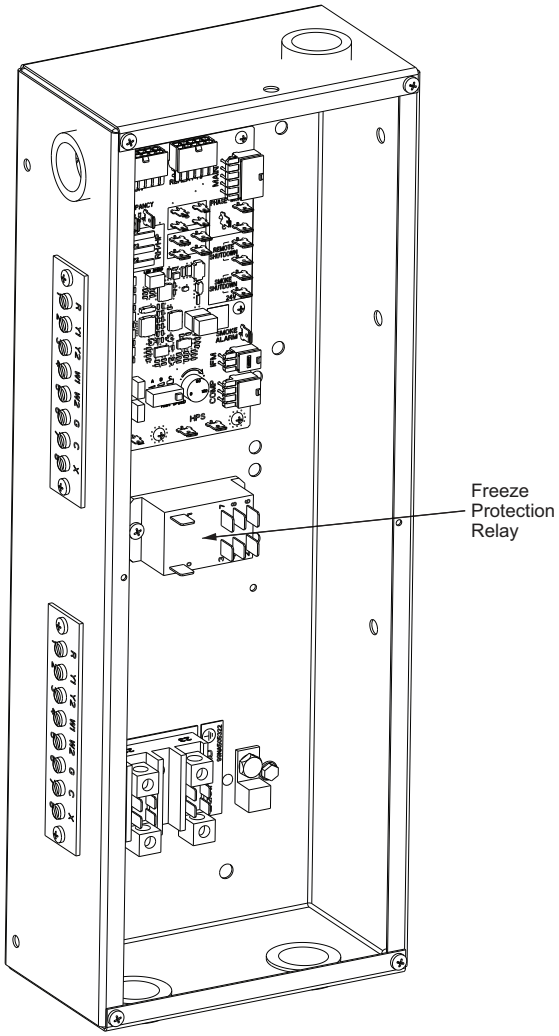

Fig. 16 — Unit Control Box
with Freeze Protection Relay

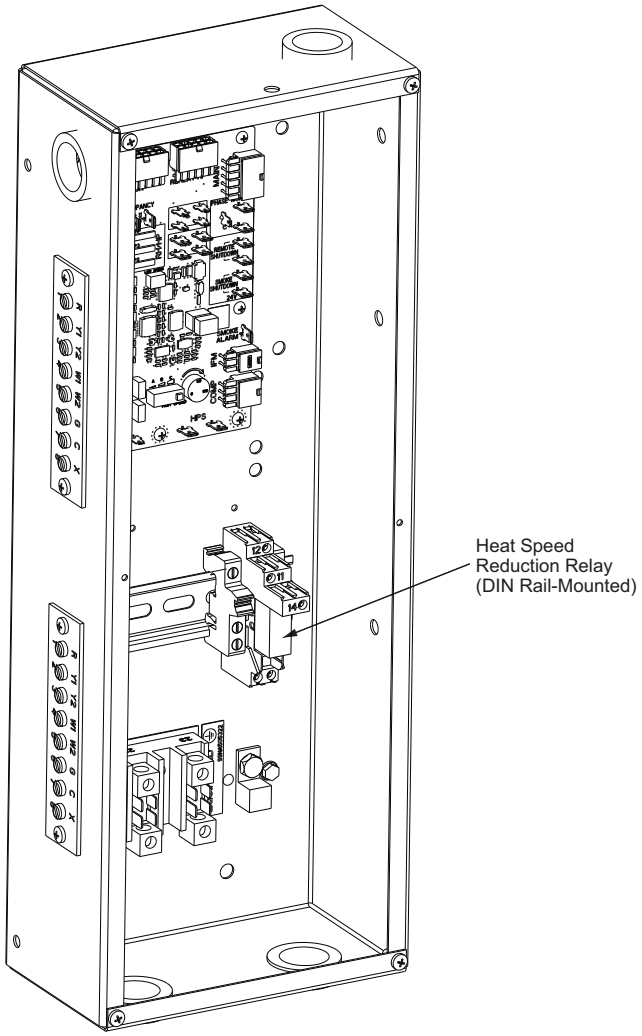

Fig. 17 — Unit Control Box
with Heat Speed Reduction Relay (DIN Rail Mounted)

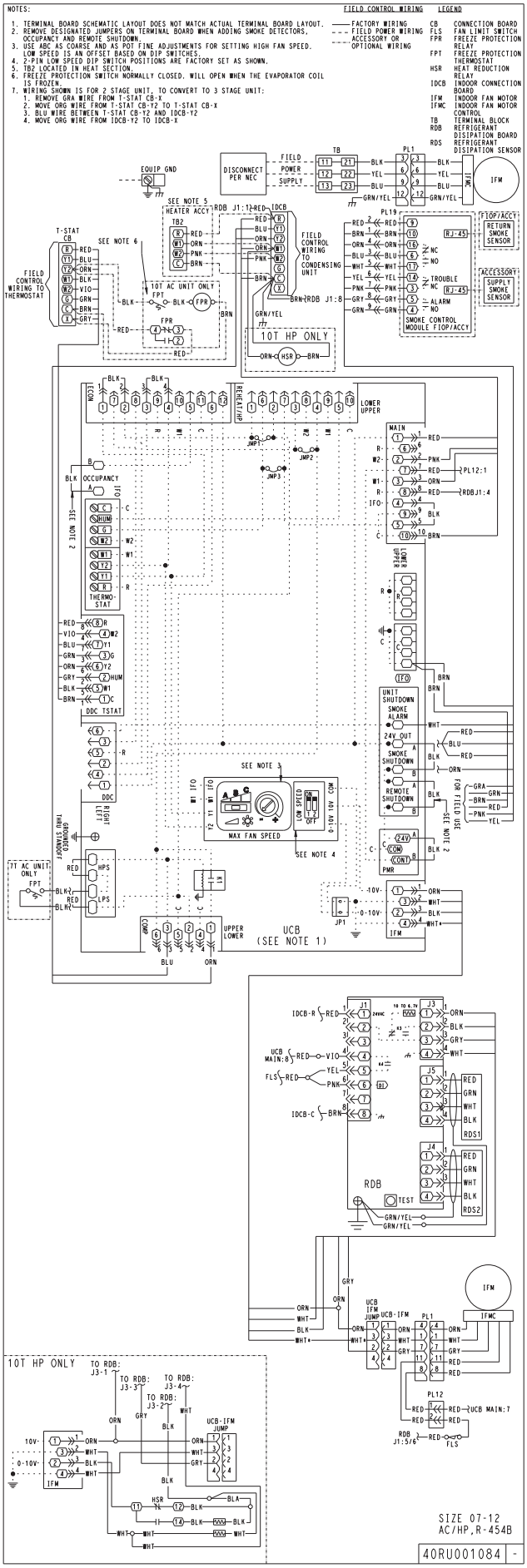

Fig. 18 — Unit Wiring Diagram

THREE STAGE OPERATION

All units are factory shipped for 2-stage cooling operation. To convert a unit to 3-stage operation, see Fig. 19 and adjust the following wires between the control board and two terminal strips on the side of the control box:

1. Remove gray wire at Thermostat CB terminal X and insulate.
2. Move orange wire from Thermostat CB terminal Y2 to terminal X.
3. Make connections of blue wire included in factory h Connect one end to Thermostat CB terminal Y2 and the other to Indoor Connection Board terminal Y2.
4. Move orange wire from Indoor Connection Board terminal Y2 to terminal X.

The 3-stage system will run the fan at low speed with a G, Y1, and Y1+Y2 call, and at high speed with a call for Y1, Y2, and Y3.

A thermostat with 3 cooling stage capability is required for this system configuration.

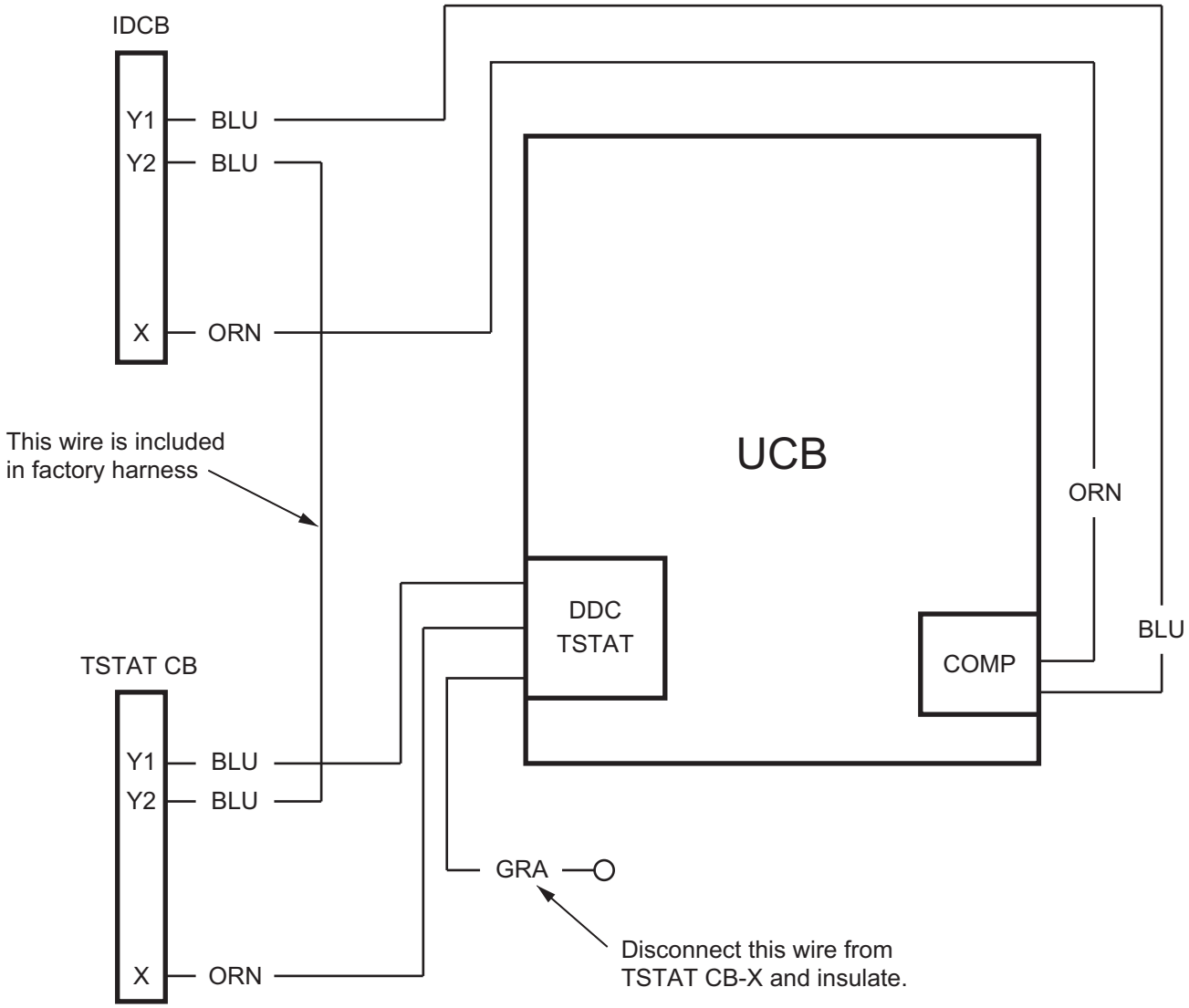

Fig. 19 — Three Stage Wiring

Leak Dissipation System

40RL units use R-454B refrigerant. These units are equipped with a factory installed R-454B leak dissipation system to ensure safe operation in the event of a refrigerant leak. This systems consists of two A2L sensors and the dissipation control board (Fig. 20) which are located in the return (indoor entering) section of the unit. The A2L sensors are located between the indoor coil and the air filters. See Fig. 22 for a more detailed view of the dissipation control box.

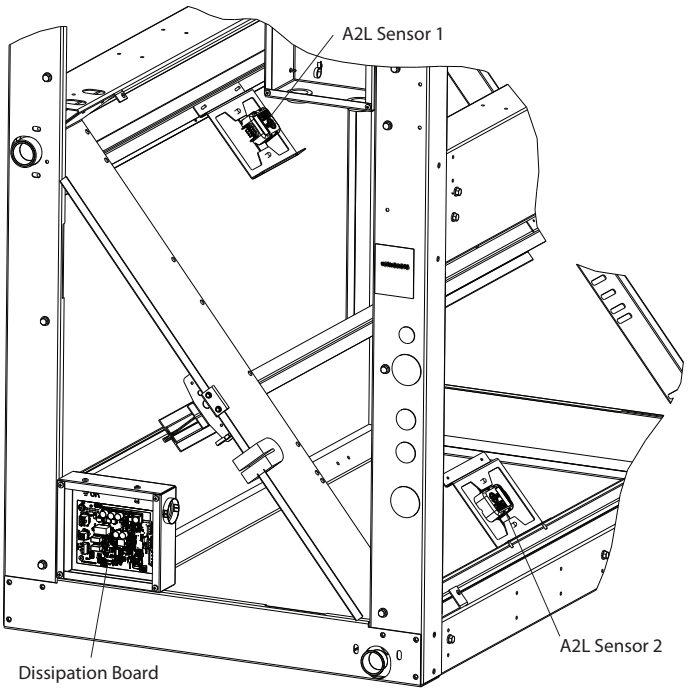

Fig. 20 — Location of A2L Sensors and Dissipation Control Board (Shown with Cover Removed)

The A2L detection sensors communicate via wiring harnesses to the dissipation boards. Each sensor harness is routed directly from the sensor to the dissipation control board through the wire access hole in the sheet metal box. Extra length of harness should be neatly bundled and wire tied.

The drain wire must be properly connected to the ground lug on the dissipation board via the quick connect and ground harness. Failure of proper sensor harness grounding can lead to false dissipation events.

NOTE: Chilled water units do not come with the leak dissipation system.

SEQUENCE OF OPERATION

The control functions as an R-454B refrigerant dissipation system. If either of the refrigerant detection sensors sends a signal indicating a refrigerant leak, the control board will prevent heating and cooling operation and begin dissipating the sensed refrigerant with a blower request. The refrigerant dissipation board will display a flash code from the yellow status LED (see Fig. 21) indicating the sensor that detected the refrigerant. See Fig. 24 — on page 22 the full text on the Dissipation Control box cover label.

When the sensor signal indicates the refrigerant has dissipated, the dissipation board yellow status LED will display a flash code 3 and return to its normal state and allow unit operations after a 5 minute delay.

LEAK DISSIPATION SYSTEM SELF-TEST

Power on the unit and verify proper functioning of equipment. The yellow Status LED on the dissipation board should be steady (see Fig. 21). If flash codes are present, see Troubleshooting on page 22.

NOTE: Operation of the Test Mode is only possible if no faults exist on the dissipation board.

Remove the cover from the Dissipation control box to access the Test button (see Fig. 23). The Test button is located above the COMM LED.

STATUS CODE DESCRIPTION FOR CONTROL BOARD

STATUS LED (YELLOW)	ERROR MODE
ON	NORMAL OPERATION
OFF	HARDWARE FAILURE
1 Flash	SENSOR 1 R454B leak
2 Flash	SENSOR 1 OPEN
3 Flash	5 MINUTE MITIGATION OFF DELAY
4 Flash	BLOWER OUTPUT NOT OPERATING
5 Flash	SENSOR 1 FAULT
6 Flash	TEST BUTTON STUCK
7 Flash	K1 OR K4 RELAY WIRING INVERTED
8 Flash	K1 OR K4 RELAY WIRING SHORTED
9 Flash	SENSOR 2 R454B LEAK
10 Flash	SENSOR 2 OPEN (Sensor config jumper)
11 Flash	SENSOR 2 FAULT
12 Flash	INCORRECT TEMP SENSOR
13 Flash	FIRE/SMOKE OVERRIDE

Test Button Operation Notes:
1. Test mode (60 second mitigation test) = Press test button for 1 second
2. Alarm code history (last 7 codes from 1 week history) = Press test button for 10 seconds
3. Clear alarm history = Press test button 3 times consecutively

48TC006475 REV A

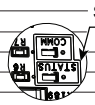

Fig. 21 — Yellow STATUS LED

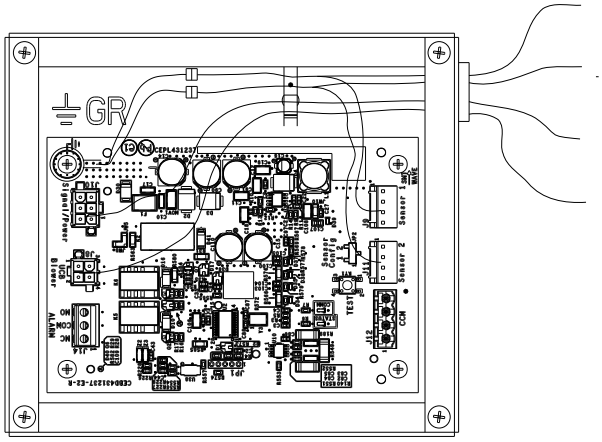

Fig. 22 — Dissipation Control Box

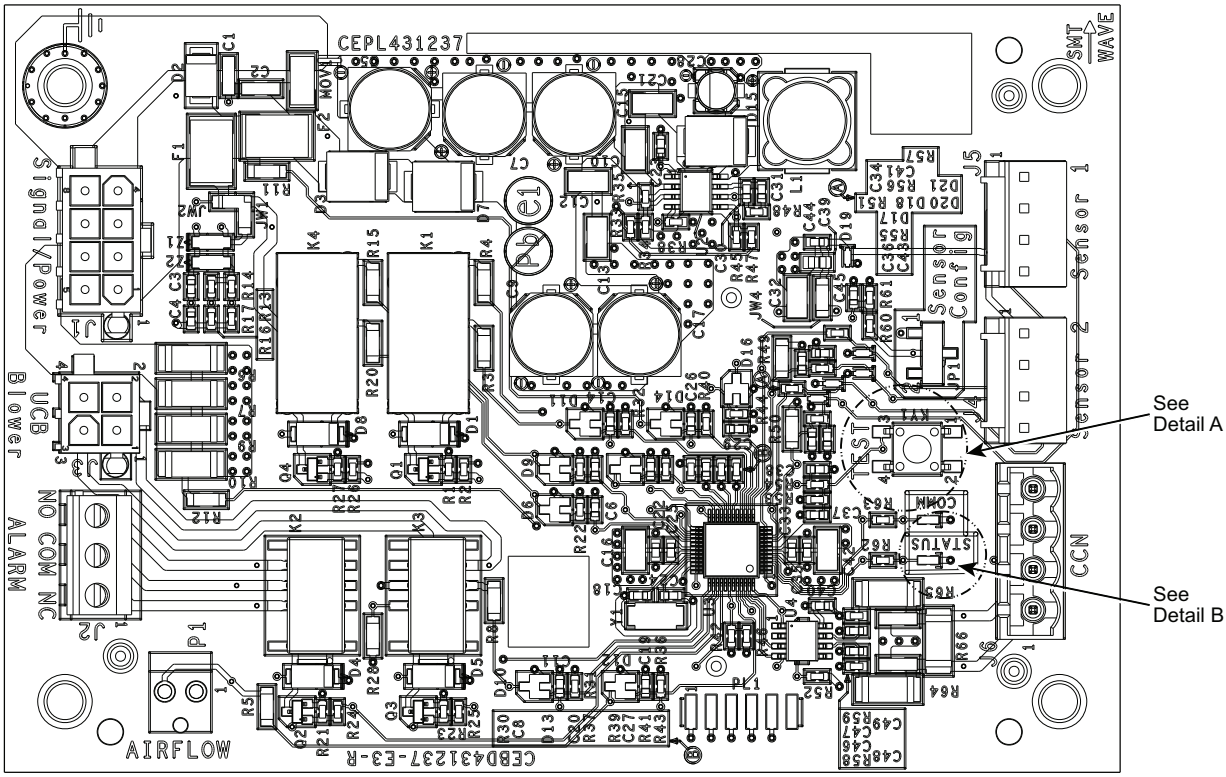

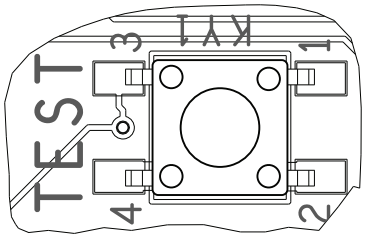

Detail A — Test Button

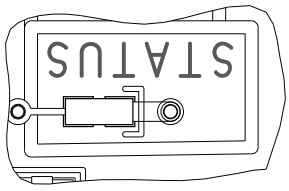

Detail B — Status LED

Fig. 23 — Dissipation Control Board — Shown without Dust Cover

Press the Test button on the dissipation system control board to ensure proper dissipation system operation under each test condition listed below. After pressing the Test button, system will enter Dissipation Mode for 60 seconds to help verify correct operation.

IMPORTANT: Press the Test button for roughly ONE SECOND to enter Test Mode. Pressing the Test button for a longer periods enables different functions (see Table 11).

Table 11 — Dissipation Board Test Button Functions

HOLD BUTTON TIME (SEC)	FUNCTION
1-4	Dissipation Mode for 60 seconds
5-29	Display flash code history
30+	Flash code 6
3 Rapid Presses	Clear flash code history

Ensure that the unit is able to meet the minimum required dissipation mode airflows. These required minimum airflow rates during Dissipation Mode are listed in Table 12. Table 12 also shows the minimum required total conditioned room area. Both minimum required airflow and room area are based on the maximum possible charge in the system, calculated from the longest line set for each system listed in the condensing unit installation instructions.

Table 12 — Minimum Dissipation Airflow and Minimum Required Area of Total Conditioned Space Based on Max System Charge

UNIT	MAX ALLOWABLE CHARGE (lb)	AIRFLOW (cfm)	ROOM AREA (ft²)
38AXZM/N07-40RLA*07	33.5	910	505
38AXZM/N08-40RLA*08	43.2	1170	650
38AXZM/N12-40RLA*12	78.8	2130	1180
38AXDT/U12-40RLA*12	82.5	2230	1240
38AXQM/N07-40RLQ*07	23.0	490	345
38AXQM/N08-40RLA*08	32.2	660	485
38AXQM/N12-40RLA*12	34.7	730	520

Table 13 details the required operational checks to ensure proper dissipation system function.

Table 13 — Dissipation System Required Operational Checks

NORMAL OPERATION				
TEST NO.	**UNIT DEMAND**	**COMPRESSOR**	**INDOOR FAN**	**ELECTRIC HEAT**
1	None	Off	Off	Off
2	Cool	On	On	Off
3	Heat	On for 40RLQ	On	On
DISSIPATION ACTIVATED				
4	None	Off	On	Off
5	Cool	Off	On	Off
6	Heat	Off	On	Off

Fig. 24 shows the flash codes displayed on the Dissipation control board.

TROUBLESHOOTING

For all flash codes, first try power cycling the system to remove the code.

No Power

Verify the wiring to/from pins 1 and 8 on the power harness plug. Check the 24V system wiring the IDCB terminal in the main control box.

See Table 14 for details on the operating status and troubleshooting of the Dissipation system for the various flash codes.

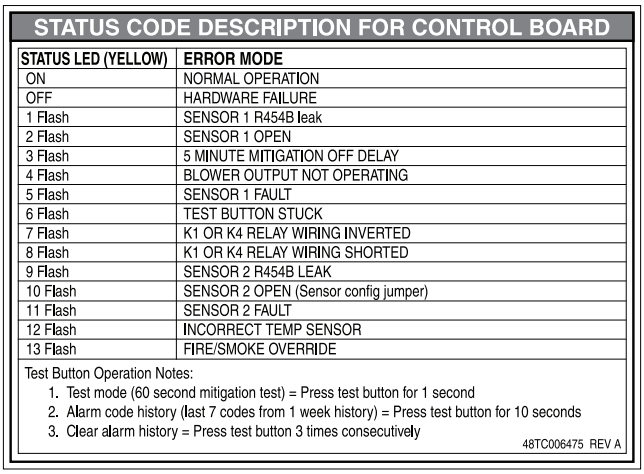

Fig. 24 — Dissipation Control Cover Label

Table 14 — Status LED Troubleshooting Table

STATUS LED	REASON	CONTROL VERBIAGE	MODE
1 Flash	Sensor 1 ≥ 20% LFL	REFRIG DISSIPATION ACTIVE	Dissipation in Process
2 Flash	Sensor 1 Open	REFRIG SENSOR OPEN	Dissipation in Process
3 Flash	5 Minute Blower Operating, Sensor < 20% LFL and sensors are not opened (done after fault 1, 2, 9 and 10)	DISSIPATION OFF DELAY ACTIVE	Dissipation in Process
4 Flash	0 VAC sensed on G output.	BLOWER OUTPUT NOT OPERATING	Dissipation in Process
5 Flash	Fault with the A2L digital sensor	REFRIG SENSOR FAULT	Dissipation in Process
6 Flash	If KY1 is stuck pressed for more than 30 seconds.	TEST BUTTON STUCK	To prevent a shorted KY1 to keep the dissipation running continuously.
7 Flash	Y out switched with Y in or W out switched with W in	Y (K4) OR W (K1) WIRING INVERTED	Normal mode
8 Flash	Y or W shorted (relay detects both sides are high)	Y (K4) OR W (K1) OUTPUT SHORTED TO Y (K4) OR W (K1) INPUT	Normal mode
9 Flash	Sensor 2 ≥ 20% LFL	SENSOR 2 DISSIPATION ACTIVE	Dissipation in Process
10 Flash	Sensor 2 Open	SENSOR 2 OPEN	Dissipation in Process
11 Flash	Fault with the second A2L digital sensor	SENSOR 2 FAULT	Dissipation in Process
12 Flash	High temperature sensor attached on commercial	OVERCURRENT INCORRECT SENSOR	Normal mode
13 Flash	G input signal is lost. Indicates another unit safety will override dissipation.	EXT SAFETY OVERRIDE	Normal mode

LEGEND

LFL — Lower Flammable Limit

Connecting Ductwork

Refer to the Carrier System Design Manual for the recommended design and layout of ductwork.

⚠CAUTION

UNIT OPERATION HAZARD

Failure to follow this caution could cause equipment damage.

Do not operate unit without ductwork or discharge plenum unless fan speed has been adjusted for external static pressure of zero in. wg. Failure to do so may result in motor overload.

DISCHARGE CONNECTION

Duct flanges are factory-supplied; they are shipped inside the unit attached to the hairpin end of the coil tube sheet for field installation. Using the existing screws, install the duct flange on the unit's fan deck. The fan discharge requires 2 flanges; each flange must be bent in the middle to conform to the discharge opening. (See Fig. 25.) After flanges are installed, connect them to the supply duct using a canvas connection to prevent vibration. It is important that this connection be properly fabricated to prevent high air friction losses and air noise.

RETURN CONNECTIONS

When using return-air ductwork, route return-air duct to the unit's return air inlet near the filter rack, using a canvas connection to prevent transmission of unit vibration. If the duct blocks off the unit's access panel, provide a slip joint in the ductwork to permit removal for servicing.

OUTDOOR-AIR INLET CONNECTIONS

Connect outdoor-air inlet to field-installed accessory economizer. Refer to Economizer Installation Instructions.

Return-Air Filters

Type and size of filters are shown in Tables 1-3 and are factory-supplied and factory-installed. In all units with 2 fans, a filter replacement tool (hook) is shipped inside the unit for field use when replacing filters. See the Service section for instructions on filter element replacement.

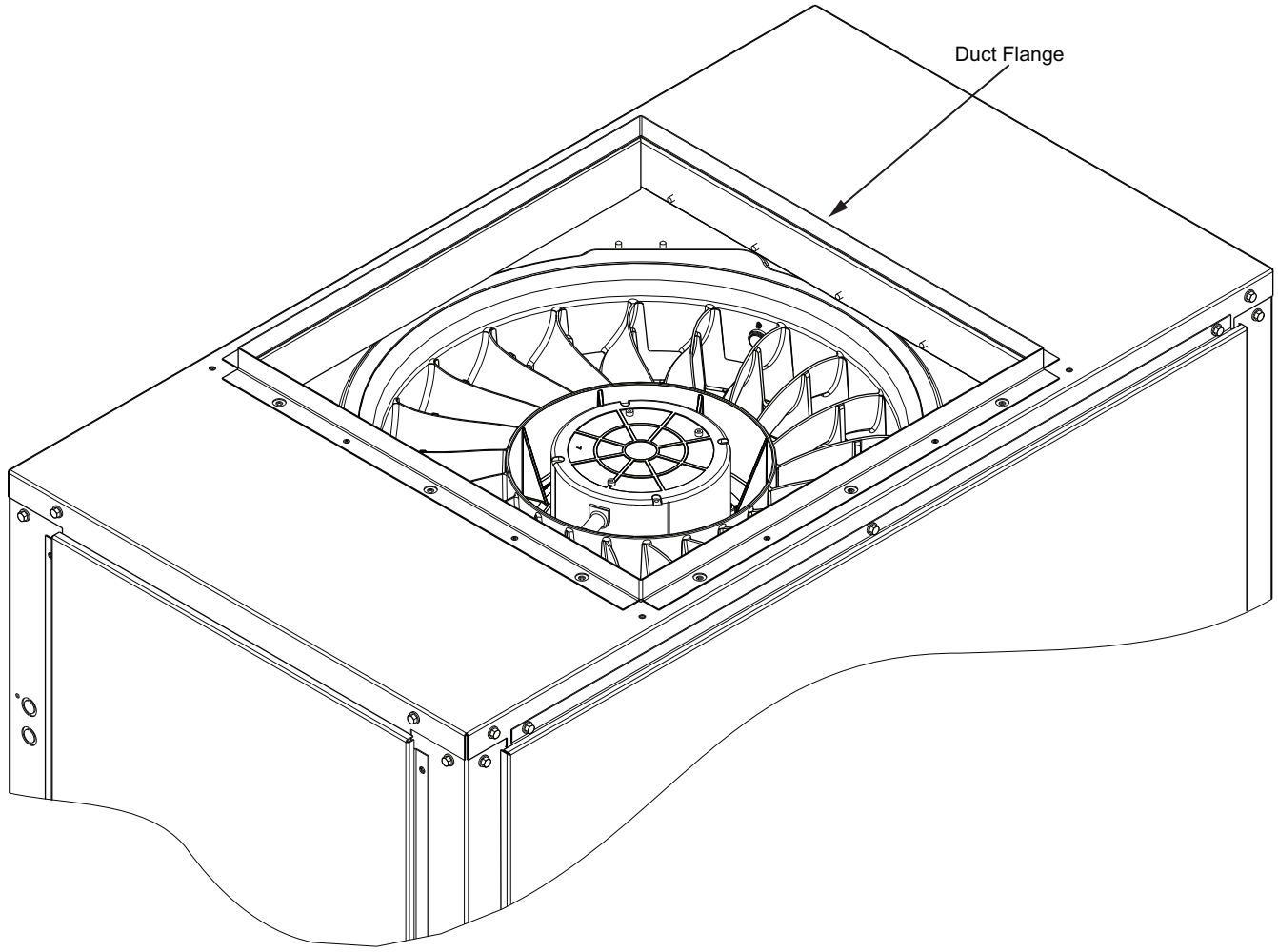

Fig. 25 — Duct Flange Installation

START-UP

Before starting unit, check the following and correct as necessary:

- Is unit solidly supported?
- Are there any loose parts that will rattle or vibrate?
- Is condensate drain pan pitched for correct drainage?
- Are coil baffle plates tight against coil to prevent air bypass?
- Are all panels securely fastened?
- Are all electrical connections correct and tight?
- Are there any loose or disconnected wires in the control box, or wires in contact with sharp edges or moving parts?
- Have all safety, caution, and warning labels been read?

40RLA and 40RLQ ONLY

- Is TXV bulb located on suction tube per Fig. 26?
- Is the capillary tube to the bulb free of kinks and not subject to pinching?
- Is the bulb well secured to the suction tube with strap?

Also refer to condensing unit or outdoor heat pump section instructions before starting a split system. A split system start-up checklist is provided at the end of these instructions.

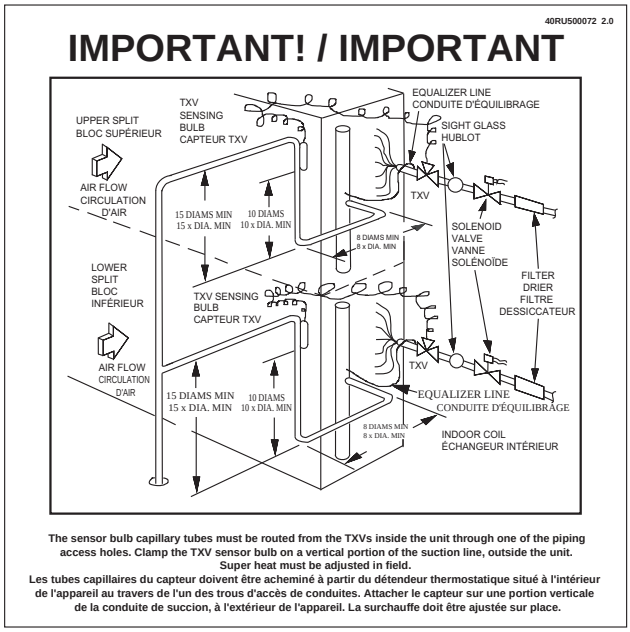

Fig. 26 — TXV Bulb Location Label

Adjusting TXV for Superheat (40RLA and 40RLQ only)

The unit-mounted thermostatic expansion valve(s) is/are factory set to provided superheat at the bulb location in 10°F to 15°F (5.5°C to 8.3°C) range. Actual system load conditions may require adjustment of the factory setting. (See Fig. 27.)

To adjust the TXV superheat setting:

1. Remove the seal cap from the bottom of the TXV body.
2. To increase superheat, turn the stem clockwise. To decrease the superheat, turn the stem counterclockwise. Do not turn the stem more than one full turn.
3. Wait until suction pressure and superheat stabilize. This may take more than 30 minutes.
4. Continue adjustment until superheat reaches 10°F to 15°F (5.5°C to 8.3°C).
5. Replace the seal cap; tighten.

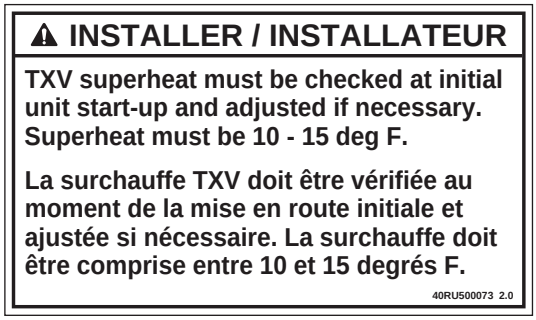

Fig. 27 — TXV Adjustment Label

Fan Performance

See Tables 19-45 for fan performance data, starting on page 35.

1. Interpolation is permissible. Do not extrapolate.
2. External static pressure is the static pressure difference between the return duct and the supply duct plus the static pressure caused by any FIOPs or accessories.
3. Tabular data accounts for pressure loss due to clean filters, unit casing and wet coils.
4. Factory options and accessories may effect static pressure losses. Selection software is available, through your salesperson, to help you select the best motor/drive combination for your application.
5. The fan performance tables (see Tables 19-45) offer motor/drive recommendations. In cases when two motor/drive combinations would work, Carrier recommends the lower horsepower option.
6. The EPACT (Energy Policy Act of 1992) regulates energy requirements for specific types of indoor fan motors. Motors regulated by EPACT include any general purpose, T-frame (three-digit, 143 and larger), single-speed, foot mounted, polyphase, squirrel cage induction motors of NEMA (National Electrical Manufacturers Association) design A and B, manufactured for use in the United States. Ranging from 1 to 200 Hp, these continuous-duty motors operate on 230 and 460 volt, 60 Hz power. If a motor does not fit into these specifications, the motor does not have to be replaced by an EPACT compliant energy-efficient motor. Variable-speed motors are exempt from EPACT compliance requirements.

MAINTENANCE

These items should be part of a routine maintenance program, to be checked every month or two, until a specific schedule for each can be identified for this installation:

Quarterly Inspection (and 30 days after initial start)

INDOOR SECTION

- Condenser coil cleanliness checked.
- Return air filter replacement
- Outdoor hood inlet filters cleaned
- Fan shaft bearing locking collar tightness checked
- Condensate drain checked

Heating

- Power wire connections
- Fuses ready
- Manual-reset limit switch is closed

See Tables 15 and 16 for unit specific maintenance checklists.

Seasonal Maintenance

These items should be checked at the beginning of each season (or more often if local conditions and usage patterns dictate):

AIR CONDITIONING

- Condenser fan motor mounting bolts tightness
- Compressor mounting bolts
- Condenser fan blade positioning
- Control box cleanliness and wiring condition
- Wire terminal tightness
- Refrigerant charge level
- Evaporator coil cleaning
- Evaporator blower motor amperage

Table 15 — Outdoor Unit Maintenance Checklist

MAINTENANCE CHECKLIST[a]	RECOMMENDED INTERVAL[b]	
Outdoor unit specific:	**Monthly**	**Annual**
Clear away debris and vegetation near unit.	X	
Inspect cabinet for damage. Replace components that are damaged or severely rusted.		X
Inspect electrical disconnect for proper function. Repair or replace as necessary.		X
Inspect electrical wiring and connections. Tighten loose connections. Inspect and perform functional test of equipment as needed to ensure proper function. Repair or replace damaged or overheated components and wiring.		X
Check refrigerant system subcooling and superheat.		X
Inspect inside of unit. Clean if debris is present.		X
Inspect condenser coil. Clean if dust, dirt, or debris is present. Rinse unit with fresh water.[c]		X[d]
Inspect motor and fan for damage. Make sure fans spin freely.		X

NOTE(S):

a. The above list may not include all maintenance items. Inspection intervals may vary depending on climate and opening hours. Consult your Carrier dealer about a service contact for seasonal inspections.
b. Monthly maintenance items and outdoor unit rinsing may be performed by the customer. All other maintenance items and all service work must be performed by a qualified service technician. Read all warning labels.
c. Do not use harsh chemicals or high pressure water on coils. More frequent rinsing is required near a sea coast.
d. Monthly rinsing of the condenser coil is recommended if the unit is located in a corrosive climate.

Table 16 — Indoor Unit Maintenance Checklist

MAINTENANCE CHECKLIST[a]	RECOMMENDED INTERVAL[b]	
Indoor unit specific: (for accessories refer to unit specific literature)	**Monthly**	**Annual**
Inspect, clean, or replace air filter if dirty.	X	
Inspect and clean blower assembly (includes blower housing, wheel, and motor).		X
Inspect internal and external cabinet. Clean as needed.		X
Inspect electrical disconnect for proper function. Repair or replace as necessary.		X
Inspect electrical components, wiring, and connections. Tighten loose connections. Repair or replace damaged components and wiring.		X
Inspect evaporator coil. Clean if dust, dirt, or debris is present.[c]		X
Clean condensate pan, trap, and drain lines (more frequent maintenance may be required in humid climates - consult your local HVAC dealer).		X
Inspect motor and fan for damage. Inspect airflow system (ductwork). Check for leaks and repair as needed.		X

NOTE(S):

a. The above list may not include all maintenance items. Inspection intervals may vary depending on climate and opening hours. Consult your Carrier dealer about a service contact for seasonal inspections.
b. Monthly maintenance items and outdoor unit rinsing may be performed by the customer. All other maintenance items and all service work must be performed by a qualified service technician. Read all warning labels.
c. Do not use harsh chemicals or high pressure water on coils. More frequent rinsing is required near a sea coast.

SERVICE

Inspection and maintenance should be performed at regular intervals and should include the following:

- Complete cleaning of cabinet, fan wheel, cooling coil, condensate pan and drain, heating coils, and return-air grille (if present).
- Inspection of panels and sealing of unit against air leakage.
- Cleaning or replacement of filters.
- Testing for cooling/heating system leaks.
- Checking of all electrical connections.

⚠WARNING

ELECTRICAL SHOCK HAZARD

Failure to follow this warning could result in personal injury or death.

Before performing service or maintenance operations on unit, always turn off main power switch to unit and install lockout tag. Unit may have more than one power switch.

Most unit service can be performed by removing one or both of the unit's side panels. Coil cleaning, removal or insulation cleaning may require removal of a rear, top, or bottom panel, depending on the unit's orientation. When service is completed, replace unit panels.

Panels

Panels are fastened to unit frame with sheet metal screws. Fan and coil compartment must be sealed tightly after service to prevent air from bypassing the cooling coil.

SUPPLY FAN

⚠WARNING

ELECTRICAL SHOCK HAZARD

Failure to follow this warning could result in personal injury or death.

Before performing service or maintenance operations on unit, LOCKOUT/TAG-OUT the main power switch to unit. Electrical shock and rotating equipment could cause severe injury.

⚠CAUTION

UNIT OPERATION HAZARD

Failure to follow this caution could cause equipment damage.

Increasing fan speed produces a greater load on motor.

Do not exceed rated capacity of motor.

Supply Fan (Direct-Drive)

All 40RL units have the EcoBlue™ direct drive vane axial fan system. The fan is driven by an ECM motor with speed that is user set through the Unit Control Board (UCB). Speeds are fully configurable from 40% to 100% of motor's maximum speed. See Fig. 28 and 29.

EVALUATING MOTOR SPEED

The direct drive ECM blower motor uses a constant speed design. Motor speed is controlled by a 0-10 vdc signal, where 10 vdc is equal to motor's maximum rpm.

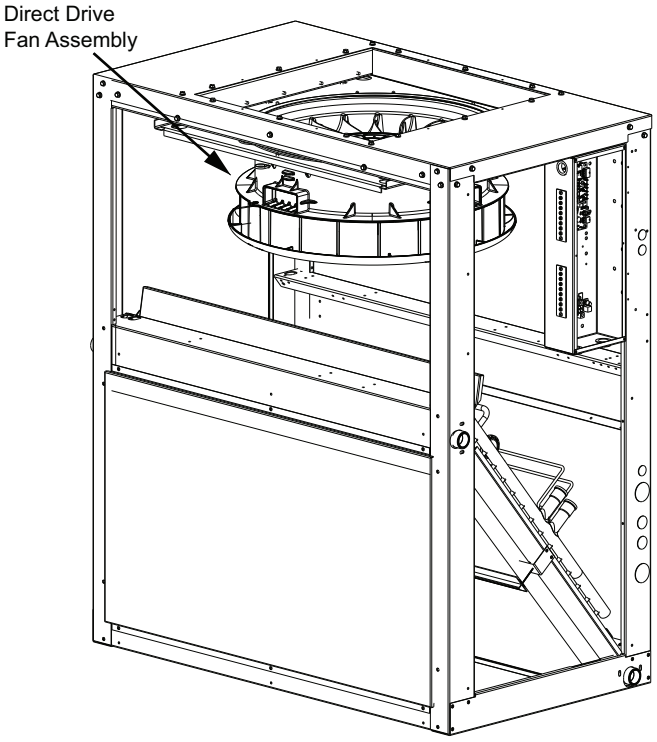

Fig. 28 — Direct-Drive Supply Fan Assembly

SELECTING FAN SPEED

All units come factory-set 8.9 vdc or approximately 89% of the motor's maximum speed. Fan speed should be set per job specification cfm (cubic feet per minute) and ESP (external static pressure) required and per Fan Speed Set Up label mounted on the control box. In some cases, the Fan Speed Set Up label may already include the field setting if unit was previously installed. Check the box on the lower half of the label to see if the field voltage setting was filled in and if so, set fan speed to that voltage. Otherwise see detailed instructions below.

NOTE: Fan Speed Set Up is for full load airflow. If the unit has multiple stages of cooling, low cool and ventilation may operate at lower fan rpms. This offset is factory set and controlled by the UCB. If fan speed verification is being done with a strobe, fan speed should be verified in all unit operation modes.

Units with Electromechanical controls

The Fan Speed Set Up controls are located on the lower section of the Unit Control Board (UCB). See Fig. 30 for location.

1. Check the job specifications for the cfm (cubic feet per minute) and ESP (external static pressure) required.
2. Using the chart on the Fan Speed Set Up labels (see Fig. 31), calculate the vdc from the cfm and ESP for the base unit.
3. If installing any accessories listed at the bottom of the Fan Speed Set Up Label, add accessory vdc to base unit vdc in upper portion of label. For electric heaters use only one adder (ex. 2 stage heater uses only 2 stage adder, not 1 stage plus 2 stage).

NOTE: The Fan Speed Set Up labels are located on the Control Box.

4. Connect a multimeter to the vdc terminals on the UCB.
5. Set the Range Switch to either A, B, or C per the Switch Range table.
6. Using a straight blade screwdriver turn the vdc control dial to fine tune the vdc reading.
7. Record the reading in the Field Setting field.

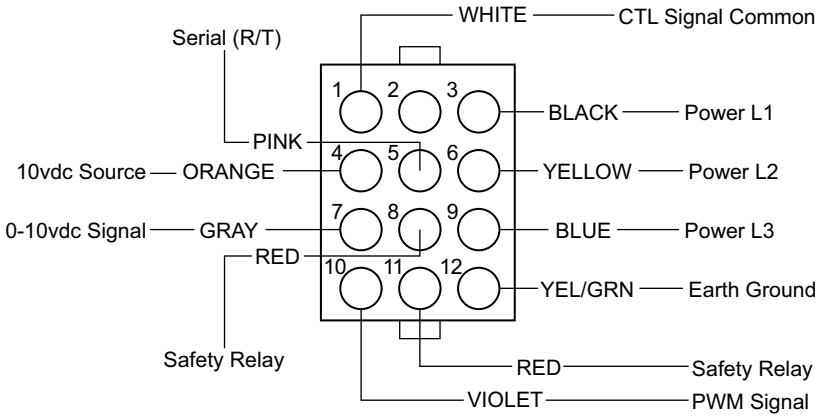

Fig. 29 — ECM Motor Plug Connectors

Low Speed Fan Adjustment

2-Pin DIP Switch

The Low Speed 2-Pin DIP switch is located near the center of the UCB. See Fig. 30.

When replacing UCB, the board will be shipped as default without a low speed selected. For all units, set both dip switches to "OFF" (0) for Test and Balance. Set both dip switches to "ON" (1) for normal operation. See Table 17. The dip switch positions can also be found on the unit's control label diagram.

Table 17 — Low Speed 2-Pin DIP Switch Settings

LOW SPEED		% OF USER SET FAN SPEED	MODE
DIP1	DIP2		
0	0	100%	Test and Balance
1	1	66%	Normal Operation

FAN FAULT DETECTION

The supply fan assembly is equipped with a relay internal to the motor and a manual limit switch installed on the stator. These components work in tandem to prevent the supply fan from running if the there are electrical issues or high temperatures in the supply air section. If the 40RL is connected to the condensing unit correctly (refer to Power Supply and Wiring), the Unit Control Board will also prevent the thermostat signals from being sent to the condensing unit, preventing compressor(s) from energizing if there is a problem with the supply fan.

FREEZE PROTECTION

On select models (40RLAA07 and 40RLAA12), there is a factory-installed and wired temperature switch (P/N HH18HB016) to protect the compressor(s) in the condensing unit when frost buildup is present on the indoor coil. The temperature switch is used to prevent the compressor(s) from turning on while the indoor coil is frosted. See Fig. 18 — Unit Wiring Diagram for the wiring of this switch.

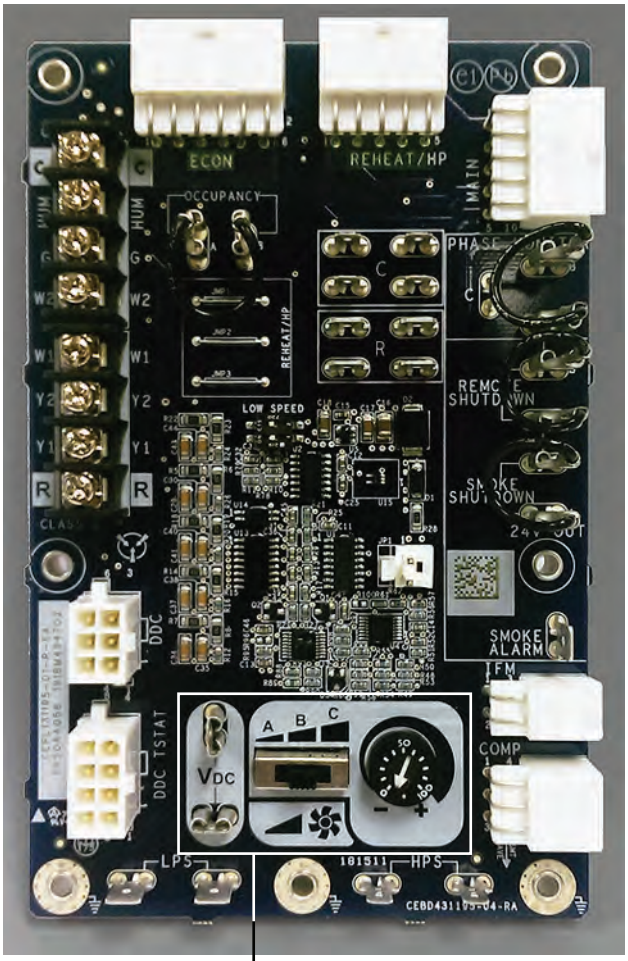

Fig. 30 — UCB Fan Speed Controls

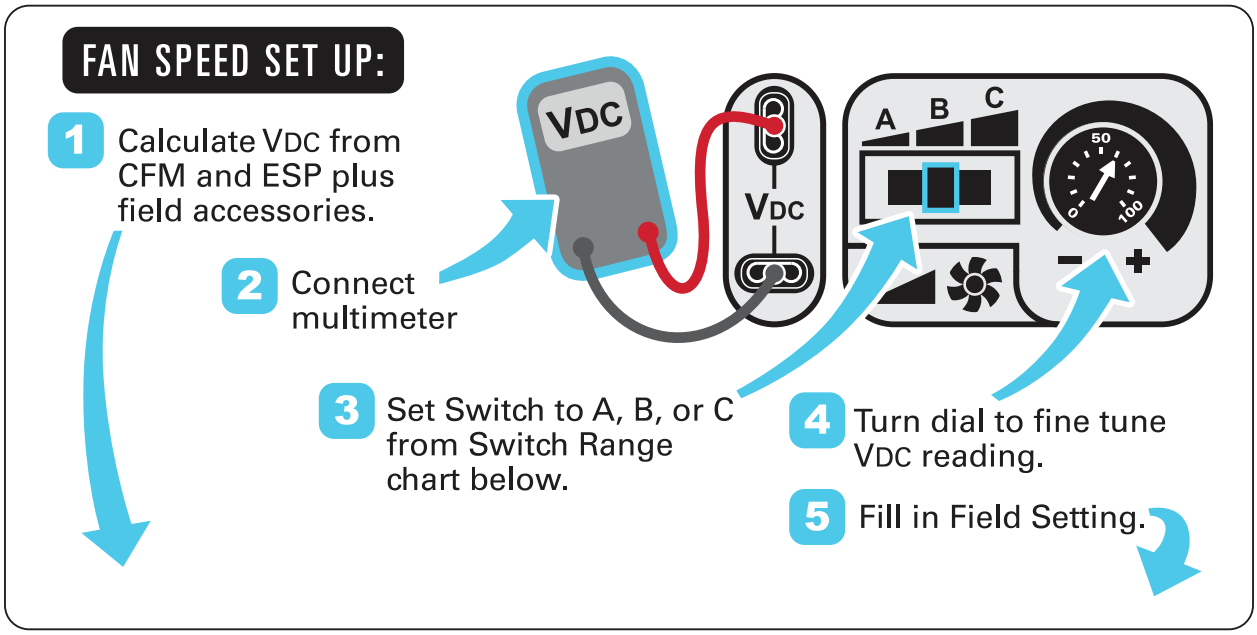

VDC Calculator

UNIT MODEL NUMBER / CFM	ESP in. wg 0.2	0.4	0.6	0.8	1.0	1.2	1.4	1.6	1.8	2.0
1500	5.4	6.2	6.9	7.5	8.1	8.6	9.1	9.6		
1625	5.8	6.5	7.1	7.7	8.3	8.8	9.3	9.8		
1750	6.1	6.8	7.4	8.0	8.5	9.0	9.5	9.9		
1875	6.5	7.1	7.7	8.2	8.7	9.2	9.7			
2000	6.8	7.4	7.9	8.5	9.0	9.5	9.9			
2125	7.2	7.7	8.2	8.7	9.2	9.7				
2250	7.6	8.0	8.5	9.0	9.5	10.0				
2375	7.9	8.4	8.8	9.3	9.8					
2500	8.3	8.7	9.2	9.6						
Field Accessories:										
Economizer	0.1	0.1	0.1	0.1	0.1	0.1	0.1	0.1		
1 Stage E Heat	0.2	0.2	0.2	0.2	0.2	0.2	0.2	0.2		
2 Stage E Heat	0.3	0.3	0.3	0.3	0.3	0.3	0.3	0.3		

Factory Setting:
9.0 VDC

Field Setting:

Record field setting here

_____ VDC

Switch Range: *

A B C	
A	4.1 - 7.5
B	6.9 - 8.7
C	7.7 - 10.0

** Overlap in A, B, C switch range designed for maximum field adjustment potential. For example 7.2 can be set at either A or B.*

NOTE: Values in the Field Accessories section are VDC adders.

Fig. 31 — Example of Fan Speed Set Up Labels for Electromechanical Controls

TROUBLESHOOTING THE ECM MOTOR

EcoBlue™ motors are designed with several built-in protections included in the motor software. If the motor detects a fault it will safely shut down. See Table 18 for a complete list.

Table 18 — Supply Fan Motor Logic and Safety Relays

DESCRIPTION	START DELAY
No Error	—
NTC Over-Temperature Protection	Automatic Reset – Motor starts 12 seconds after the temperature falls below reset limit.
Phase Fault	Automatic Reset – Motor to start after 3 phases present.
Over Current Protection	Automatic Reset – If motor over-current protection trips, motor restarts after 20 seconds off time. If over-current is detected 3 times consecutively, the motor is off for 3 minutes and restarts. Cycle starts again after 20 seconds.
Locked Rotor Protection, Start-up	Automatic Reset – If motor detects locked rotor, it attempts to restart after 5 seconds. If motor detects 3 consecutive faults, the motor waits 3 minutes and restarts. Cycle starts again after 20 seconds.
Locked Rotor Protection, Running	
Over/Under Voltage	Automatic Reset – Motor restarts as soon as input voltage is back within ±10%.
Current Sampling Error	Manual Reset – Power off and wait 2 minutes and restart motor.
Microelectronic (MCU) Fault	Automatic Reset – Motor restarts 3 minutes after fault clears. Manual Reset – Power off and wait 2 minutes and restart motor.

Troubleshooting the motor requires a voltmeter.

1. Disconnect main power to the unit.
2. Disconnect motor plug in supply section of the unit.
3. Restore main unit power.
4. Check for proper line voltage at motor power leads Black (PL1-1), Yellow (PL1-2), and Blue (PL1-3). See the following table.

40RL UNIT VOLTAGE	MOTOR VOLTAGE	MIN-MAX VOLTS
208/230	230	187-253
460	460	360-506
575	575	517-633

5. Disconnect main power.
6. Reconnect motor plug in supply section of unit.
7. Restore main power.
8. Check for proper motor control voltage signal of 9.7 vdc to 10.3 vdc at IFM-1 and IFM-3 on Unit Control Board (UCB). See Fig. 32.
9. Using a jumper wire from TSTAT CB terminals R to G, engage motor operation.
10. Verify control signal from user speed selection switch by placing voltmeter taps in provided terminals marked vdc. Signal should be between 3.8 vdc and 10.3 vdc.
11. If the motor does not start and run, remove the fan assembly and replace the motor with one having the same part number. Do not substitute with an alternate design motor as the voltage/speed programming will not be the same as that on an original factory motor.

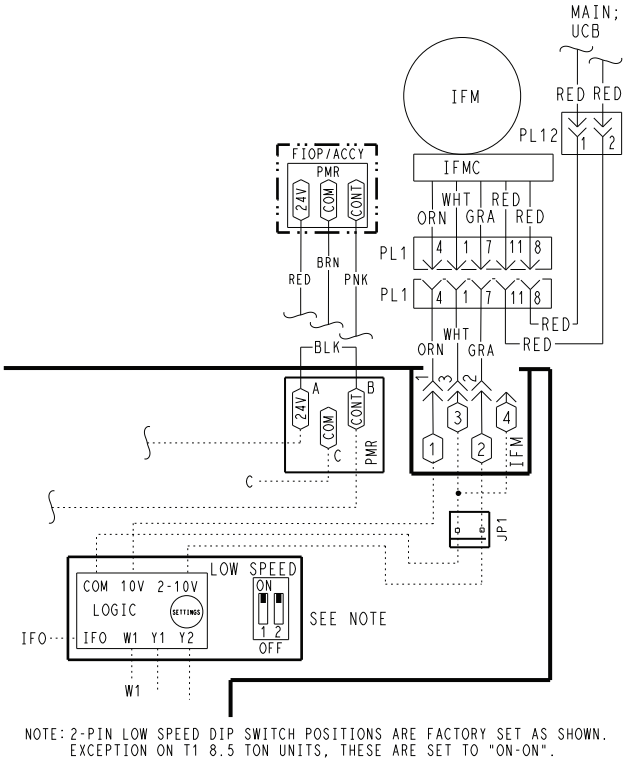

Fig. 32 — Supply Fan Control Wiring Diagram

Service Access for Supply Fan and Motor

HORIZONTAL APPLICATIONS

Removing the Motor and Fan Assembly

NOTE: Due to press fit design of composite Rotor on Motor, it is highly recommended that any time a motor is replaced the fan rotor is replaced as well. The rest of the assembly may be reused.

1. Unplug motor harness from control box harness. See Fig. 33.
2. Unplug connectors from stator temperature limit switch. See Fig. 33.
3. Remove three screws from each of the quarter round stator retention brackets. See Fig. 34.
4. Slide fan assembly out of the panel opening that is being used. Side panel access will require the assembly to be angled to clear the opening. See Fig. 35.

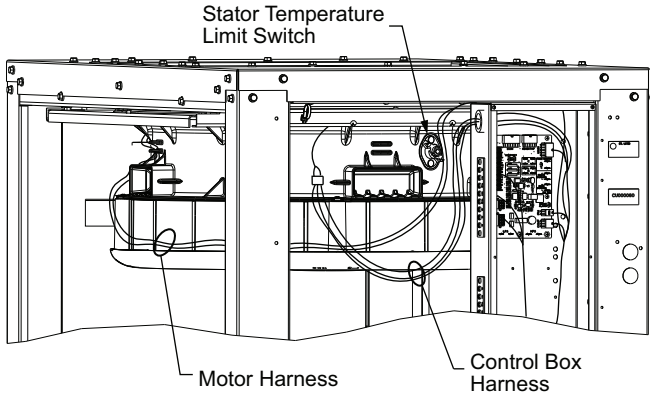

Fig. 33 — Locations of Motor Harness and Stator Temperature Limit Switch

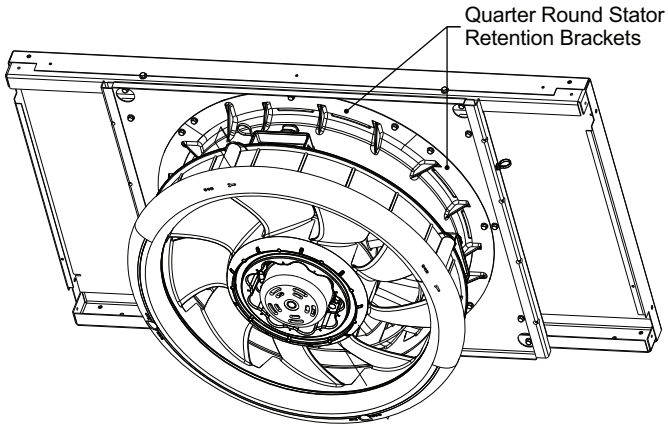

Fig. 34 — Quarter Round Stator Retention Brackets

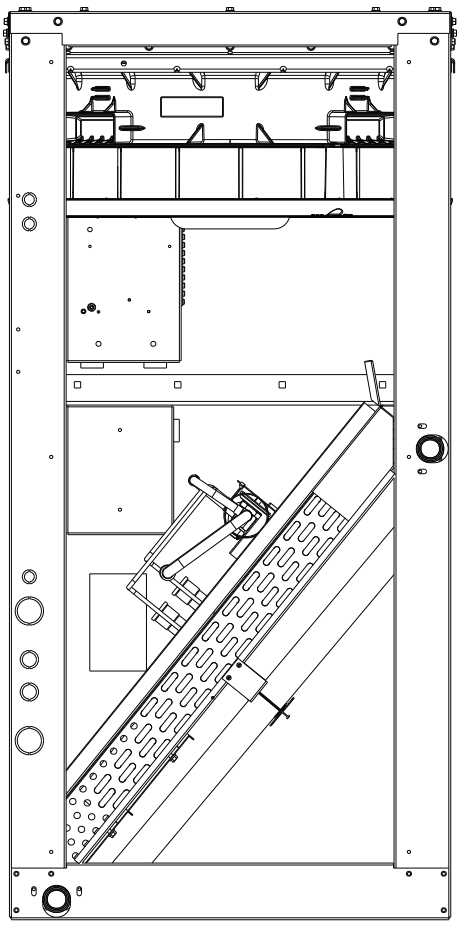

Fig. 35 — Fan Assembly, Side Panel Access (Side Panel Removed)

Disassembling Motor and Fan Assembly

See Fig. 36 for 2.4 Hp motor units; see Fig. 37 for 3.0 Hp motor units.

1. Remove the four bolts that hold the orifice ring to the stator.
2. Remove the orifice ring from the stator
3. Remove three screws from the top of the fan rotor.
4. Remove the rotor from the motor.
5. Remove the four screws connecting the motor to stator flange.
6. Remove stator from motor.
7. If required, remove stator limit switch on the stator.

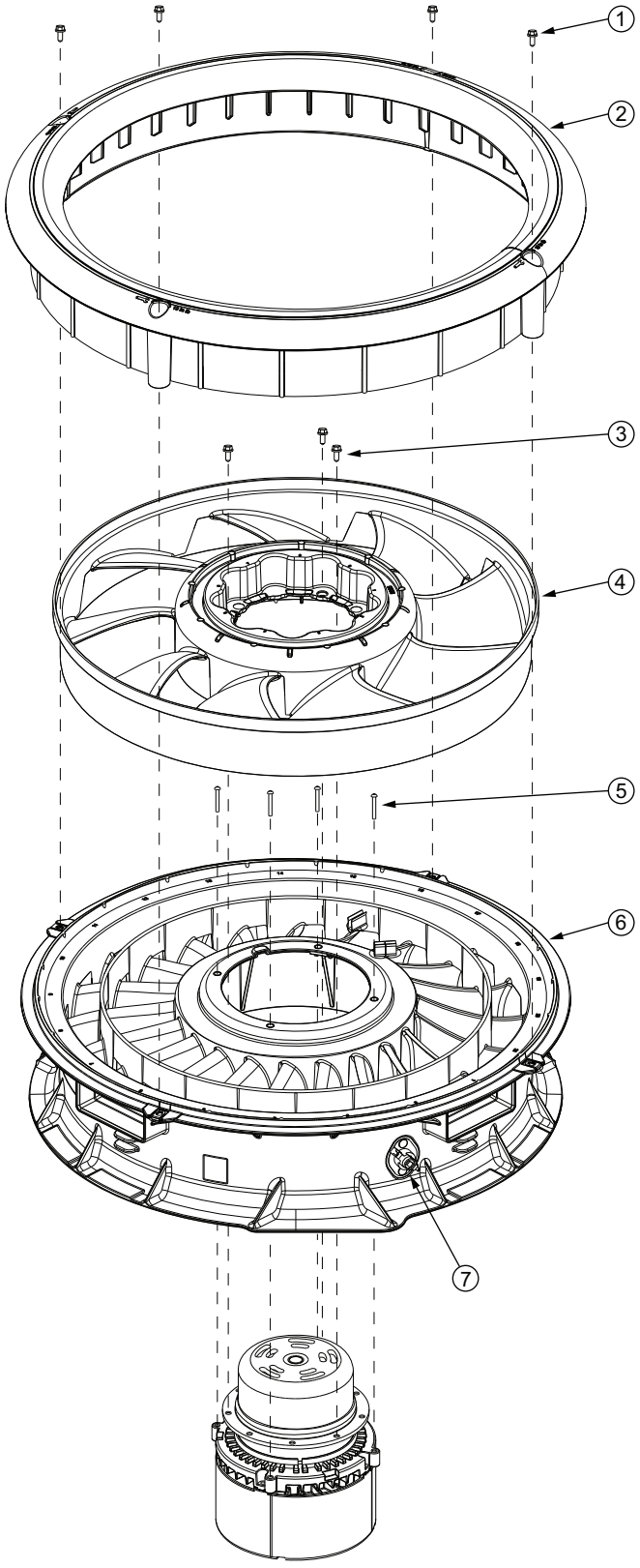

Fig. 36 — Fan Assembly for Units with 2.4 Hp Motor

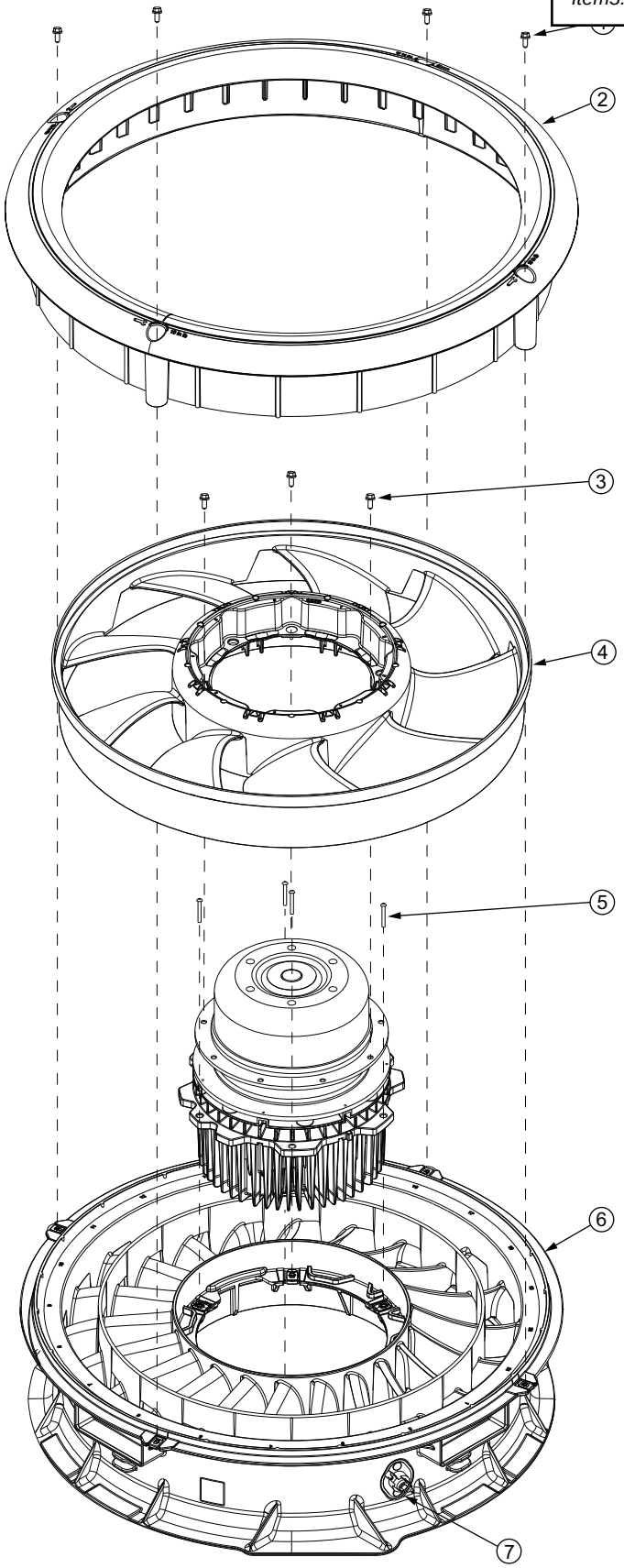

Fig. 37 — Fan Assembly for Units with 3.0 Hp Motor

Reassembly of Motor and Fan Assembly

1. See Fig. 36 for 2.4 Hp motor units; see Fig. 37 for 3.0 Hp motor units. Place motor on flat surface.
2. If required, install stator limit switch on the stator with two plastic push rivets (P/N: HH18HA597).
3. Fit motor wire harness into keyhole feature on the side of the stator and pull wire harness out prior to fixing the motor to the stator. See Fig. 38.

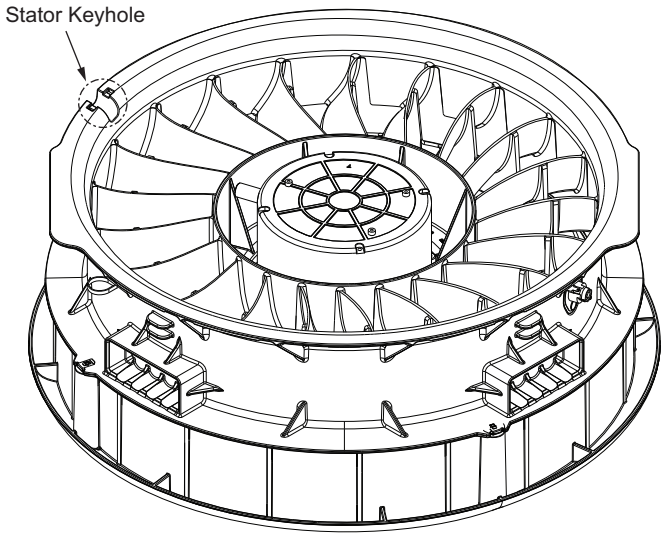

Fig. 38 — Stator Keyhole Location

4. The 2.4 Hp motors attach to the stator from the bottom by setting the stator assembly on the motor. The 3.0 Hp motors attach to the stator from the top and are gently lowered into the recess for the motor.
5. For the 2.4 Hp motor, install four 1/4-20 x 1-in. hex head machine screws (P/N: AC67AP170) to connect stator to motor. Tighten to 50 in.-lb (5.65 Nm).
6. For the 3.0 Hp motor, install six 1/4-20 x 1-in. hex head machine screws (P/N: AC67AP170) to connect stator to motor. Tighten to 30 in.-lb (3.39 Nm).
7. Install rotor on motor by lining up the rotor holes to the motor holes. The rotor has self-aligning features that engage into the motor holes. Press fan rotor down until it is flush with the motor flange.
8. Install three 1/4-20 x 1-in. hex head machine screws (P/N: AC67AP170) through the holes in the rotor. Tighten to 50 in.-lb (5.65 Nm)
9. Align holes of composite fan inlet casing with screw holes on the top flange of the fan stator. Using a socket extension and either a 1/4-in. or 3/8-in. drive socket, install four #10-16 hex head machine screws (P/N: AP13ADAD128) and tighten to 14 in.-lb (1.58 Nm).
10. Final assembly should have a small clearance between top of plastic rotor and underside of casing lip. Spin rotor by hand to ensure no contact or rubbing between these two parts.

Reinstalling Motor and Fan Assembly

1. Re-install the two lower quarter round retainers
2. Align motor harness/grommet aligned with the control box
3. Drop fan assembly down into fan deck opening and slide it so that the lip is in the fan deck recess and is retained by the quarter round brackets.
4. Install the remaining quarter round brackets.
5. Adjust the orientation of the stator so that it aligns with embossed recess in the fan deck.
6. Reconnect wires for stator temperature limit switch.
7. Pull motor harness tight through grommet and plug it in to the control box harness and secure in the corner with snap-in wire tie.

VERTICAL APPLICATIONS

Removing the Motor and Fan Assembly

NOTE: Due to press fit design of composite Rotor on Motor, it is highly recommended that any time a motor is replaced the fan rotor is replaced as well. The rest of the assembly may be reused.

See Fig. 36 for 2.4 Hp motor units; see Fig. 37 for 3.0 Hp motor units.

1. Unplug motor harness from control box harness. See Fig. 33.
2. Unplug connectors from stator temperature limit switch. See Fig. 33.
3. Remove six screws from the fan deck. See Fig. 39.
4. Allow the fan deck to drop into the slider tracks (careful not to pinch body parts when the fan drops) See Fig. 40.
5. Slide fan deck assembly out of the panel opening that is being used. Side panel access will not be allowed. See Fig. 41.
6. Remove the quarter round plates to free the fan assembly.

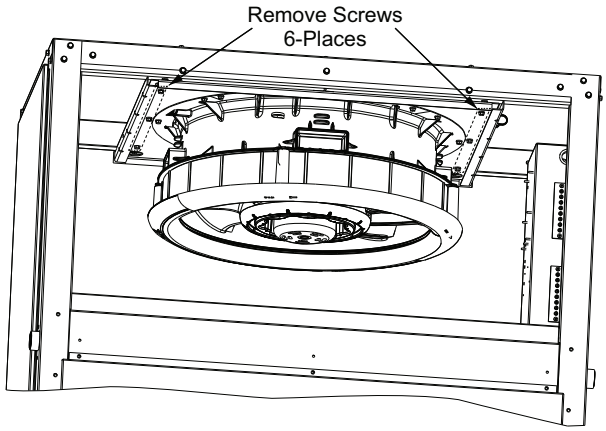

Fig. 39 — Remove Screws from Fan Deck Assembly

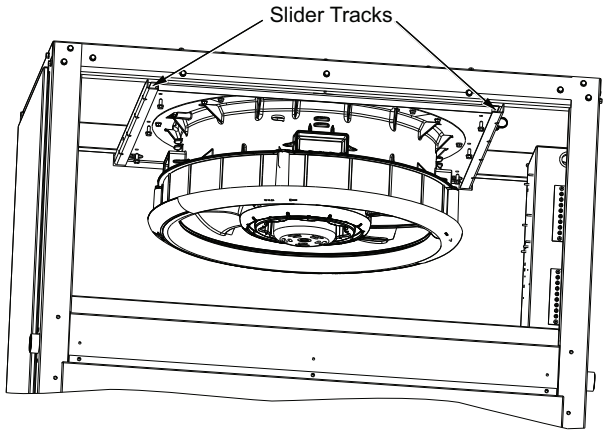

Fig. 40 — Lower Fan Deck Assembly to Slider Tracks

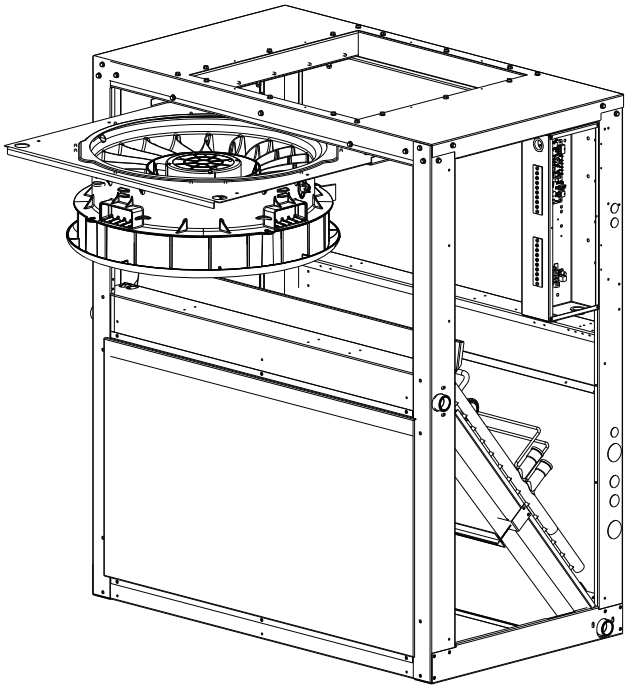

Fig. 41 — Slide Out Fan Deck Assembly

Disassembling Motor and Fan Assembly

See Fig. 36 for 2.4 Hp motor units; see Fig. 37 for 3.0 Hp motor units.

1. Remove the four bolts that hold the orifice ring to the stator.
2. Remove the orifice ring from the stator.
3. Remove three screws from the top of the fan rotor.
4. Remove rotor from motor.
5. Remove four screws connecting motor to stator flange.
6. Remove stator from motor.
7. If required, remove stator limit switch on the stator.

Reassembly of Motor and Fan Assembly

See Fig. 36 for 2.4 Hp motor units; see Fig. 37 for 3.0 Hp motor units.

1. Place motor on flat surface.
2. If required, install stator limit switch on the stator with two plastic push rivets (P/N: HH18HA597).
3. Fit motor wire harness into keyhole feature on the side of the stator and pull wire harness out prior to fixing the motor to the stator.
4. The 2.4 Hp motors attach to the stator from the bottom by setting the stator assembly on the motor. The 3.0 Hp motors attach to the stator from the top and are gently lowered into the recess for the motor.
5. For the 2.4 Hp motor, install four 1/4-20 x 1-in. hex head machine screws (P/N: AC67AP170) to connect stator to motor. Tighten to 50 in.-lb (5.65 Nm).
6. For the 3.0 Hp motor, install six 1/4-20 x 1-in. hex head machine screws (P/N: AC67AP170) to connect stator to motor. Tighten to 30 in.-lb (3.39 Nm).
7. Install rotor on motor by lining up the rotor holes to the motor holes. The rotor has self-aligning features that engage into the motor holes. Press fan rotor down until it is flush with the motor flange.
8. Install three 1/4-20 x 1-in. hex head machine screws (P/N: AC67AP170) through the holes in the rotor. Tighten to 50 in.-lb (5.65 Nm)
9. Align holes of composite fan inlet casing with screw wells on the top flange of the fan stator.
10. Final assembly should have a small clearance between top of plastic rotor and underside of casing lip. Spin rotor by hand to ensure no contact or rubbing between these two parts. Insert four screws (P/N: AP13AD128) and tighten to 14 in.-lb (1.58 Nm).

Reinstalling Motor and Fan Assembly

1. Reassemble the motor assembly to the fan deck.
2. Reinstall the quarter round plates and tighten the screws.
3. Align motor harness/grommet aligned with the control box.
4. Slide the fan deck back into the unit assembly.
5. Re-install the six retainer screws.
6. Reconnect wires for stator temperature limit switch.
7. Pull motor harness tight through grommet and plug it in to the control box harness and secure in the corner with snap-in wire tie.

Condensate Drains

Keep condensate drains free of dirt and foreign matter.

Return-Air Filters

Refer to Replacing Filters section on page 34 for filter accessibility and removal. Replace with clean filters of the sizes listed in Tables 1-3.

Chilled Water Coil Freeze Protection

Shut off water supply to unit. Remove side panel of unit and remove vent and drain plugs in top and bottom of coil header. Drain coil and blow out remaining water. Reinstall plugs and side panel. Alternative freeze protection methods follow:

- Circulate hot water within the water coil's supply main or supplementary space heating.
- Close off supply lines to unit and open a union or field-supplied drain valve in the return line.

IMPORTANT: Draining from return line will not completely drain water from coils.

- After draining as much water as possible from coils, add sufficient antifreeze to prevent residual water in the coil from freezing.
- Add a sufficient quantity of non-corrosive antifreeze to the entire system to prevent all water within the system from freezing.

Coil Removal

Remove unit panels and corner posts as required. Disconnect coil connections and remove fastening screws. Remove coil through end or side sections of unit.

Cleaning Cooling Coil

Remove return-air filters. Remove any heavy dirt that may have accumulated on underside of coil. Coil can be cleaned more easily with a stiff brush, vacuum cleaner, or compressed air when coil is dry. If coil is wet or if water is to be used for cleaning, guard against splashing water on electrical components or damaging surrounding area. Clean coil baffles as applicable and check for tight fit to be sure air does not bypass coil.

Cleaning Insulation

The insulation contains an immobilized antimicrobial agent that helps inhibit the growth of bacteria and fungi. Clean the inner surface of the insulation according to the separate maintenance instructions shipped with the unit.

Replacing Filters

Filters can be removed and installed from either side of the unit. Install new filters in units that have one fan as follows:

1. Remove the side access panel (retain screws).
2. Remove the filter retainer clip (see Fig. 42).
3. Remove old filters by lifting and tilting them out of the filter track. (See Fig. 14 and 43.)
4. Reverse the procedure to install new filters.

To install new filters in larger units that have 2 fans, follow the preceding steps, but use the factory-supplied filter hook to slide filters within reach for removal. The filter hook is shipped inside the unit in the filter track.

⚠CAUTION

EQUIPMENT DAMAGE HAZARD

Failure to follow this CAUTION can result in premature wear and damage to equipment.

DO NOT OPERATE THE UNIT WITHOUT THE RETURN AIR FILTERS IN PLACE.

Dirt and debris can collect on heat exchangers and coils possibly resulting in a small fire. Dirt buildup on components can cause excessive current used resulting in motor failure.

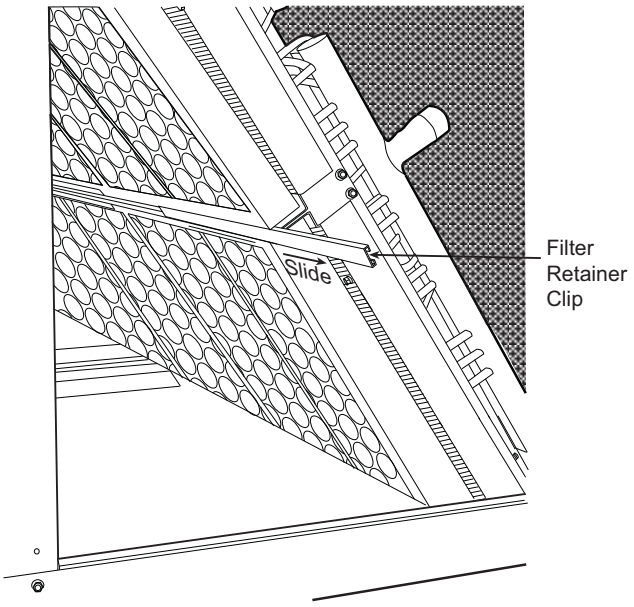

Fig. 42 — Remove Filter Retainer Clip

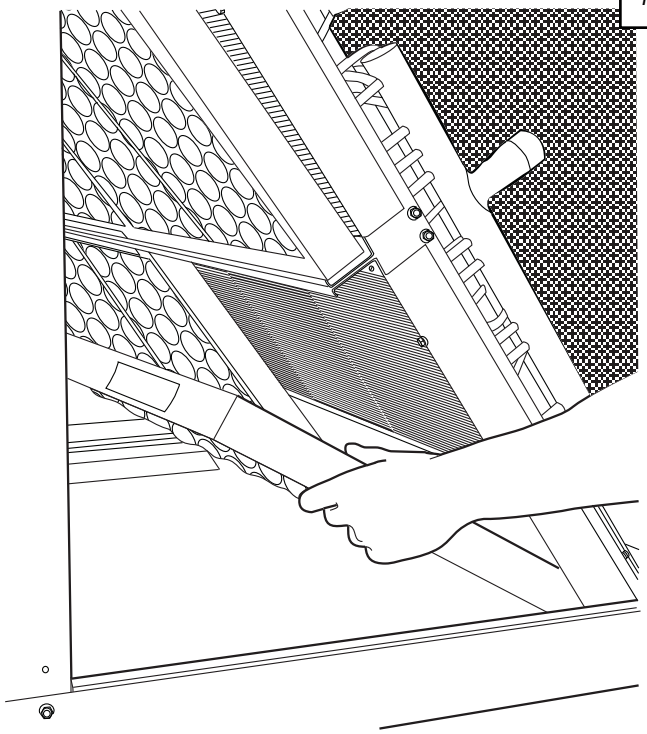

Fig. 43 — Filter Removal/Replacement

FAN PERFORMANCE

General Fan Performance Notes

See Tables 19-45 for fan performance data.

1. Interpolation is permissible. Do not extrapolate.
2. External static pressure is the static pressure difference between the return duct and the supply duct plus the static pressure caused by any FIOPs or accessories.
3. Tabular data accounts for pressure loss due to clean filters, unit casing and wet coils.
4. Factory options and accessories may effect static pressure losses. Selection software is available, through your salesperson, to help you select the best motor/drive combination for your application.
5. The fan performance tables (see Tables 19-45) offer motor/drive recommendations. In cases when two motor/drive combinations would work, Carrier recommends the lower horsepower option.
6. The EPACT (Energy Policy Act of 1992) regulates energy requirements for specific types of indoor fan motors. Motors regulated by EPACT include any general purpose, T-frame (three-digit, 143 and larger), single-speed, foot mounted, polyphase, squirrel cage induction motors of NEMA (National Electrical Manufacturers Association) design A and B, manufactured for use in the United States. Ranging from 1 to 200 Hp, these continuous-duty motors operate on 230 and 460 volt, 60 Hz power. If a motor does not fit into these specifications, the motor does not have to be replaced by an EPACT compliant energy-efficient motor. Variable-speed motors are exempt from EPACT compliance requirements.

Table 19 — 40RLAA07 Fan Data (rpm - bhp)

CFM	AVAILABLE EXTERNAL STATIC PRESSURE (in. wg)									
	0.2		0.4		0.6		0.8		1.0	
	rpm	bhp	rpm	bhp	rpm	bhp	rpm	bhp	rpm	bhp
1800	788	0.18	942	0.31	1081	0.48	1202	0.67	1308	0.88
1950	828	0.20	973	0.34	1107	0.52	1227	0.71	1333	0.92
2100	870	0.23	1005	0.37	1134	0.55	1252	0.75	1358	0.97
2250	914	0.26	1040	0.41	1163	0.59	1278	0.80	1383	1.02
2400	958	0.30	1077	0.45	1194	0.63	1305	0.84	1409	1.07
2550	1004	0.34	1115	0.50	1226	0.68	1334	0.89	1435	1.13
2700	1050	0.39	1155	0.55	1261	0.74	1364	0.95	1462	1.18
2850	1097	0.44	1197	0.60	1297	0.79	1395	1.01	1491	1.25
3000	1144	0.50	1239	0.66	1334	0.86	1429	1.08	1521	1.32

CFM	AVAILABLE EXTERNAL STATIC PRESSURE (in. wg)									
	1.2		1.4		1.6		1.8		2.0	
	rpm	bhp	rpm	bhp	rpm	bhp	rpm	bhp	rpm	bhp
1800	1403	1.09	1491	1.32	1571	1.55	1647	1.79	1718	2.04
1950	1429	1.14	1517	1.38	1598	1.62	1674	1.87	1745	2.13
2100	1454	1.20	1542	1.44	1624	1.69	1700	1.95	1772	2.21
2250	1479	1.25	1568	1.50	1650	1.76	1726	2.02	1799	2.30
2400	1504	1.31	1593	1.57	1675	1.83	1752	2.11	1825	2.39
2550	1529	1.37	1618	1.64	1700	1.91	1777	2.19	1850	2.48
2700	1555	1.44	1643	1.70	1725	1.98	1802	2.27	1875	2.57
2850	1582	1.50	1668	1.78	1750	2.06	1827	2.36	1900	2.66
3000	1610	1.58	1695	1.86	1775	2.14	1852	2.45	1925	2.76

Medium Static 788-1695 rpm, 1.86 Max bhp

High Static 788-1925 rpm, 2.76 Max bhp

Table 20 — 40RLAA07 Medium Static Fan Data (rpm - vdc)

CFM	AVAILABLE EXTERNAL STATIC PRESSURE (in. wg)									
	0.2		0.4		0.6		0.8		1.0	
	rpm	vdc	rpm	vdc	rpm	vdc	rpm	vdc	rpm	vdc
1800	788	3.8	942	4.6	1081	5.3	1202	5.9	1308	6.4
1950	828	4.0	973	4.7	1107	5.4	1227	6.0	1333	6.6
2100	870	4.2	1005	4.9	1134	5.5	1252	6.2	1358	6.7
2250	914	4.4	1040	5.1	1163	5.7	1278	6.3	1383	6.8
2400	958	4.6	1077	5.3	1194	5.9	1305	6.4	1409	7.0
2550	1004	4.9	1115	5.4	1226	6.0	1334	6.6	1435	7.1
2700	1050	5.1	1155	5.7	1261	6.2	1364	6.7	1462	7.2
2850	1097	5.4	1197	5.9	1297	6.4	1395	6.9	1491	7.4
3000	1144	5.6	1239	6.1	1334	6.6	1429	7.1	1521	7.5

CFM	AVAILABLE EXTERNAL STATIC PRESSURE (in. wg)									
	1.2		1.4		1.6		1.8		2.0	
	rpm	vdc	rpm	vdc	rpm	vdc	rpm	vdc	rpm	vdc
1800	1403	6.9	1491	7.4	—	—	—	—	—	—
1950	1429	7.1	1517	7.5	—	—	—	—	—	—
2100	1454	7.2	1542	7.6	—	—	—	—	—	—
2250	1479	7.3	1568	7.8	—	—	—	—	—	—
2400	1504	7.4	1593	7.9	—	—	—	—	—	—
2550	1529	7.6	1618	8.0	—	—	—	—	—	—
2700	1555	7.7	1643	8.2	—	—	—	—	—	—
2850	1582	7.9	1668	8.3	—	—	—	—	—	—
3000	1610	8.0	1695	8.4	—	—	—	—	—	—

Medium Static 788-1695 rpm

Table 21 — 40RLAA07 High Static Fan Data (rpm - vdc)

CFM	AVAILABLE EXTERNAL STATIC PRESSURE (in. wg)									
	0.2		0.4		0.6		0.8		1.0	
	rpm	vdc	rpm	vdc	rpm	vdc	rpm	vdc	rpm	vdc
1800	788	3.5	942	4.2	1081	4.8	1202	5.4	1308	5.9
1950	828	3.7	973	4.3	1107	5.0	1227	5.5	1333	6.0
2100	870	3.9	1005	4.5	1134	5.1	1252	5.6	1358	6.1
2250	914	4.1	1040	4.6	1163	5.2	1278	5.7	1383	6.2
2400	958	4.3	1077	4.8	1194	5.4	1305	5.9	1409	6.3
2550	1004	4.5	1115	5.0	1226	5.5	1334	6.0	1435	6.5
2700	1050	4.7	1155	5.2	1261	5.7	1364	6.1	1462	6.6
2850	1097	4.9	1197	5.4	1297	5.8	1395	6.3	1491	6.7
3000	1144	5.1	1239	5.6	1334	6.0	1429	6.4	1521	6.9

CFM	AVAILABLE EXTERNAL STATIC PRESSURE (in. wg)									
	1.2		1.4		1.6		1.8		2.0	
	rpm	vdc	rpm	vdc	rpm	vdc	rpm	vdc	rpm	vdc
1800	1403	6.3	1491	6.7	1571	7.1	1647	7.4	1718	7.8
1950	1429	6.4	1517	6.8	1598	7.2	1674	7.6	1745	7.9
2100	1454	6.6	1542	7.0	1624	7.3	1700	7.7	1772	8.0
2250	1479	6.7	1568	7.1	1650	7.5	1726	7.8	1799	8.1
2400	1504	6.8	1593	7.2	1675	7.6	1752	7.9	1825	8.3
2550	1529	6.9	1618	7.3	1700	7.7	1777	8.0	1850	8.4
2700	1555	7.0	1643	7.4	1725	7.8	1802	8.2	1875	8.5
2850	1582	7.1	1668	7.5	1750	7.9	1827	8.3	1900	8.6
3000	1610	7.3	1695	7.7	1775	8.0	1852	8.4	1925	8.7

High Static 788-1925 rpm

Table 22 — 40RLAA08 Fan Data (rpm - bhp)

CFM	AVAILABLE EXTERNAL STATIC PRESSURE (in. wg)									
	0.2		0.4		0.6		0.8		1.0	
	rpm	bhp	rpm	bhp	rpm	bhp	rpm	bhp	rpm	bhp
2250	884	0.23	1009	0.37	1131	0.54	1247	0.74	1354	0.95
2440	937	0.27	1053	0.42	1168	0.59	1279	0.79	1383	1.01
2625	991	0.32	1099	0.47	1206	0.64	1311	0.84	1412	1.07
2815	1048	0.37	1149	0.53	1249	0.70	1348	0.90	1445	1.13
3000	1103	0.43	1199	0.59	1293	0.77	1386	0.97	1478	1.20
3190	1161	0.50	1252	0.66	1340	0.85	1428	1.05	1516	1.28
3375	1218	0.57	1304	0.74	1388	0.93	1471	1.14	1554	1.37
3565	1277	0.66	1359	0.83	1438	1.02	1517	1.24	1596	1.47
3750	1335	0.75	1413	0.93	1489	1.13	1564	1.34	1639	1.58

CFM	AVAILABLE EXTERNAL STATIC PRESSURE (in. wg)									
	1.2		1.4		1.6		1.8		2.0	
	rpm	bhp	rpm	bhp	rpm	bhp	rpm	bhp	rpm	bhp
2250	1452	1.18	1542	1.43	1625	1.68	1703	1.94	1776	2.21
2440	1480	1.25	1570	1.50	1653	1.76	1731	2.03	1805	2.31
2625	1507	1.31	1597	1.57	1680	1.83	1759	2.11	1833	2.40
2815	1537	1.38	1625	1.64	1708	1.91	1787	2.20	1861	2.50
3000	1568	1.45	1654	1.72	1736	2.00	1814	2.29	1888	2.60
3190	1602	1.54	1685	1.80	1765	2.09	1842	2.39	1916	2.70
3375	1636	1.62	1717	1.90	1795	2.18	1871	2.49	1944	2.81
3565	1675	1.73	1752	2.00	1828	2.29	1902	2.60	1973	2.92
3750	1714	1.83	1788	2.11	1862	2.41	1933	2.71	2003	3.04

Medium Static 884-1788 rpm, 1.84 Max bhp

High Static 884-2003 rpm, 2.70 Max bhp

Table 23 — 40RLAA08 Medium Static Fan Data (rpm - vdc)

CFM	AVAILABLE EXTERNAL STATIC PRESSURE (in. wg)									
	0.2		0.4		0.6		0.8		1.0	
	rpm	vdc	rpm	vdc	rpm	vdc	rpm	vdc	rpm	vdc
2250	884	4.3	1009	4.9	1131	5.5	1247	6.1	1354	6.7
2440	937	4.5	1053	5.1	1168	5.7	1279	6.3	1383	6.8
2625	991	4.8	1099	5.4	1206	5.9	1311	6.5	1412	7.0
2815	1048	5.1	1149	5.6	1249	6.1	1348	6.6	1445	7.1
3000	1103	5.4	1199	5.9	1293	6.4	1386	6.8	1478	7.3
3190	1161	5.7	1252	6.2	1340	6.6	1428	7.1	1516	7.5
3375	1218	6.0	1304	6.4	1388	6.9	1471	7.3	1554	7.7
3565	1277	6.3	1359	6.7	1438	7.1	1517	7.5	1596	7.9
3750	1335	6.6	1413	7.0	1489	7.4	1564	7.8	1639	8.1

CFM	AVAILABLE EXTERNAL STATIC PRESSURE (in. wg)									
	1.2		1.4		1.6		1.8		2.0	
	rpm	vdc	rpm	vdc	rpm	vdc	rpm	vdc	rpm	vdc
2250	1452	7.2	1542	7.6	—	—	—	—	—	—
2440	1480	7.3	1570	7.8	—	—	—	—	—	—
2625	1507	7.5	1597	7.9	—	—	—	—	—	—
2815	1537	7.6	1625	8.1	—	—	—	—	—	—
3000	1568	7.8	1654	8.2	—	—	—	—	—	—
3190	1602	8.0	1685	8.4	—	—	—	—	—	—
3375	1636	8.1	1717	8.5	—	—	—	—	—	—
3565	1675	8.3	1752	8.7	—	—	—	—	—	—
3750	1714	8.5	1788	8.9	—	—	—	—	—	—

Medium Static 884-1788 rpm

Table 24 — 40RLAA08 High Static Fan Data (rpm - vdc)

CFM	AVAILABLE EXTERNAL STATIC PRESSURE (in. wg)									
	0.2		0.4		0.6		0.8		1.0	
	rpm	vdc	rpm	vdc	rpm	vdc	rpm	vdc	rpm	vdc
2250	884	3.9	1009	4.5	1131	5.1	1247	5.6	1354	6.1
2440	937	4.2	1053	4.7	1168	5.2	1279	5.7	1383	6.2
2625	991	4.4	1099	4.9	1206	5.4	1311	5.9	1412	6.4
2815	1048	4.7	1149	5.1	1249	5.6	1348	6.1	1445	6.5
3000	1103	4.9	1199	5.4	1293	5.8	1386	6.2	1478	6.7
3190	1161	5.2	1252	5.6	1340	6.0	1428	6.4	1516	6.8
3375	1218	5.5	1304	5.9	1388	6.3	1471	6.6	1554	7.0
3565	1277	5.7	1359	6.1	1438	6.5	1517	6.8	1596	7.2
3750	1335	6.0	1413	6.4	1489	6.7	1564	7.1	1639	7.4

CFM	AVAILABLE EXTERNAL STATIC PRESSURE (in. wg)									
	1.2		1.4		1.6		1.8		2.0	
	rpm	vdc	rpm	vdc	rpm	vdc	rpm	vdc	rpm	vdc
2250	1452	6.5	1542	7.0	1625	7.3	1703	7.7	1776	8.0
2440	1480	6.7	1570	7.1	1653	7.5	1731	7.8	1805	8.2
2625	1507	6.8	1597	7.2	1680	7.6	1759	8.0	1833	8.3
2815	1537	6.9	1625	7.3	1708	7.7	1787	8.1	1861	8.4
3000	1568	7.1	1654	7.5	1736	7.9	1814	8.2	1888	8.6
3190	1602	7.2	1685	7.6	1765	8.0	1842	8.3	1916	8.7
3375	1636	7.4	1717	7.8	1795	8.1	1871	8.5	1944	8.8
3565	1675	7.6	1752	7.9	1828	8.3	1902	8.6	1973	9.0
3750	1714	7.8	1788	8.1	1862	8.4	1933	8.8	2003	9.1

High Static 884-2003 rpm

Table 25 — 40RLAA12 Fan Data (rpm - bhp)

CFM	AVAILABLE EXTERNAL STATIC PRESSURE (in. wg)									
	0.2		0.4		0.6		0.8		1.0	
	rpm	bhp	rpm	bhp	rpm	bhp	rpm	bhp	rpm	bhp
3000	1080	0.40	1175	0.55	1268	0.72	1361	0.92	1453	1.14
3250	1154	0.48	1243	0.64	1329	0.81	1415	1.01	1501	1.24
3500	1229	0.57	1312	0.74	1393	0.92	1473	1.13	1553	1.35
3750	1305	0.68	1384	0.86	1459	1.04	1534	1.25	1609	1.48
4000	1381	0.80	1456	0.99	1527	1.18	1598	1.40	1668	1.63
4250	1458	0.94	1529	1.13	1597	1.34	1664	1.56	1730	1.79
4500	1535	1.09	1603	1.29	1668	1.50	1731	1.73	1794	1.97
4750	1613	1.26	1678	1.47	1740	1.69	1800	1.92	1860	2.17
5000	1691	1.45	1753	1.67	1813	1.90	1870	2.14	1927	2.39

CFM	AVAILABLE EXTERNAL STATIC PRESSURE (in. wg)									
	1.2		1.4		1.6		1.8		2.0	
	rpm	bhp	rpm	bhp	rpm	bhp	rpm	bhp	rpm	bhp
3000	1543	1.38	1629	1.64	1712	1.91	1791	2.20	1866	2.50
3250	1586	1.48	1668	1.74	1748	2.02	1825	2.31	1899	2.62
3500	1632	1.59	1711	1.86	1787	2.14	1862	2.44	1935	2.75
3750	1683	1.73	1757	1.99	1830	2.28	1902	2.58	1972	2.89
4000	1738	1.88	1807	2.14	1877	2.43	1945	2.73	2013	3.05
4250	1795	2.04	1861	2.31	1927	2.60	1992	2.90	—	—
4500	1856	2.23	1918	2.50	1980	2.79	2042	3.09	—	—
4750	1919	2.43	1977	2.71	2036	3.00	—	—	—	—
5000	1983	2.66	2039	2.94	—	—	—	—	—	—

Medium Static 1080-1918 rpm, 2.50 Max bhp

High Static 1080-2013 rpm, 3.09 Max bhp

Table 26 — 40RLAA12 Medium Static Fan Data (rpm - vdc)

CFM	AVAILABLE EXTERNAL STATIC PRESSURE (in. wg)									
	0.2		0.4		0.6		0.8		1.0	
	rpm	vdc	rpm	vdc	rpm	vdc	rpm	vdc	rpm	vdc
3000	1080	5.3	1175	5.8	1268	6.2	1361	6.7	1453	7.2
3250	1154	5.6	1243	6.1	1329	6.5	1415	7.0	1501	7.4
3500	1229	6.0	1312	6.5	1393	6.9	1473	7.3	1553	7.7
3750	1305	6.4	1384	6.8	1459	7.2	1534	7.6	1609	8.0
4000	1381	6.8	1456	7.2	1527	7.6	1598	7.9	1668	8.3
4250	1458	7.2	1529	7.6	1597	7.9	1664	8.3	1730	8.6
4500	1535	7.6	1603	8.0	1668	8.3	1731	8.6	1794	8.9
4750	1613	8.0	1678	8.3	1740	8.7	1800	9.0	1860	9.3
5000	1691	8.4	1753	8.7	1813	9.0	1870	9.3	1927	9.6

CFM	AVAILABLE EXTERNAL STATIC PRESSURE (in. wg)									
	1.2		1.4		1.6		1.8		2.0	
	rpm	vdc	rpm	vdc	rpm	vdc	rpm	vdc	rpm	vdc
3000	1543	7.6	1629	8.1	—	—	—	—	—	—
3250	1586	7.9	1668	8.3	—	—	—	—	—	—
3500	1632	8.1	1711	8.5	—	—	—	—	—	—
3750	1683	8.4	1757	8.8	—	—	—	—	—	—
4000	1738	8.7	1807	9.0	—	—	—	—	—	—
4250	1795	8.9	1861	9.3	—	—	—	—	—	—
4500	1856	9.3	1918	9.6	—	—	—	—	—	—
4750	1919	9.6	—	—	—	—	—	—	—	—
5000	—	—	—	—	—	—	—	—	—	—

Medium Static 1080-1918 rpm

Table 27 — 40RLAA12 High Static Fan Data (rpm - vdc)

CFM	AVAILABLE EXTERNAL STATIC PRESSURE (in. wg)									
	0.2		0.4		0.6		0.8		1.0	
	rpm	vdc	rpm	vdc	rpm	vdc	rpm	vdc	rpm	vdc
3000	1080	4.8	1175	5.3	1268	5.7	1361	6.1	1453	6.6
3250	1154	5.2	1243	5.6	1329	6.0	1415	6.4	1501	6.8
3500	1229	5.5	1312	5.9	1393	6.3	1473	6.6	1553	7.0
3750	1305	5.9	1384	6.2	1459	6.6	1534	6.9	1609	7.3
4000	1381	6.2	1456	6.6	1527	6.9	1598	7.2	1668	7.5
4250	1458	6.6	1529	6.9	1597	7.2	1664	7.5	1730	7.8
4500	1535	6.9	1603	7.2	1668	7.5	1731	7.8	1794	8.1
4750	1613	7.3	1678	7.6	1740	7.9	1800	8.2	1860	8.4
5000	1691	7.7	1753	7.9	1813	8.2	1870	8.5	1927	8.7

CFM	AVAILABLE EXTERNAL STATIC PRESSURE (in. wg)									
	1.2		1.4		1.6		1.8		2.0	
	rpm	vdc	rpm	vdc	rpm	vdc	rpm	vdc	rpm	vdc
3000	1543	7.0	1629	7.4	1712	7.7	1791	8.1	1866	8.5
3250	1586	7.2	1668	7.5	1748	7.9	1825	8.3	1899	8.6
3500	1632	7.4	1711	7.7	1787	8.1	1862	8.4	1935	8.8
3750	1683	7.6	1757	8.0	1830	8.3	1902	8.6	1972	8.9
4000	1738	7.9	1807	8.2	1877	8.5	1945	8.8	2013	9.1
4250	1795	8.1	1861	8.4	1927	8.7	1992	9.0	—	—
4500	1856	8.4	1918	8.7	1980	9.0	2042	9.3	—	—
4750	1919	8.7	1977	9.0	2036	9.2	—	—	—	—
5000	1983	9.0	2039	9.3	—	—	—	—	—	—

High Static 1080-2013 rpm

Table 28 — 40RLQA07 Fan Data (rpm - bhp)

CFM	AVAILABLE EXTERNAL STATIC PRESSURE (in. wg)									
	0.2		0.4		0.6		0.8		1.0	
	rpm	bhp	rpm	bhp	rpm	bhp	rpm	bhp	rpm	bhp
1800	788	0.18	942	0.31	1081	0.48	1202	0.67	1308	0.88
1950	828	0.20	973	0.34	1107	0.52	1227	0.71	1333	0.92
2100	870	0.23	1005	0.37	1134	0.55	1252	0.75	1358	0.97
2250	914	0.26	1040	0.41	1163	0.59	1278	0.80	1383	1.02
2400	958	0.30	1077	0.45	1194	0.63	1305	0.84	1409	1.07
2550	1004	0.34	1115	0.50	1226	0.68	1334	0.89	1435	1.13
2700	1050	0.39	1155	0.55	1261	0.74	1364	0.95	1462	1.18
2850	1097	0.44	1197	0.60	1297	0.79	1395	1.01	1491	1.25
3000	1144	0.50	1239	0.66	1334	0.86	1429	1.08	1521	1.32

CFM	AVAILABLE EXTERNAL STATIC PRESSURE (in. wg)									
	1.2		1.4		1.6		1.8		2.0	
	rpm	bhp	rpm	bhp	rpm	bhp	rpm	bhp	rpm	bhp
1800	1403	1.09	1491	1.32	1571	1.55	1647	1.79	1718	2.04
1950	1429	1.14	1517	1.38	1598	1.62	1674	1.87	1745	2.13
2100	1454	1.20	1542	1.44	1624	1.69	1700	1.95	1772	2.21
2250	1479	1.25	1568	1.50	1650	1.76	1726	2.02	1799	2.30
2400	1504	1.31	1593	1.57	1675	1.83	1752	2.11	1825	2.39
2550	1529	1.37	1618	1.64	1700	1.91	1777	2.19	1850	2.48
2700	1555	1.44	1643	1.70	1725	1.98	1802	2.27	1875	2.57
2850	1582	1.50	1668	1.78	1750	2.06	1827	2.36	1900	2.66
3000	1610	1.58	1695	1.86	1775	2.14	1852	2.45	1925	2.76

Medium Static 788-1695 rpm, 1.86 Max bhp

High Static 788-1925 rpm, 2.76 Max bhp

Table 29 — 40RLQA07 Medium Static Fan Data (rpm - vdc)

CFM	AVAILABLE EXTERNAL STATIC PRESSURE (in. wg)									
	0.2		0.4		0.6		0.8		1.0	
	rpm	vdc	rpm	vdc	rpm	vdc	rpm	vdc	rpm	vdc
1800	788	3.8	942	4.6	1081	5.3	1202	5.9	1308	6.4
1950	828	4.0	973	4.7	1107	5.4	1227	6.0	1333	6.6
2100	870	4.2	1005	4.9	1134	5.5	1252	6.2	1358	6.7
2250	914	4.4	1040	5.1	1163	5.7	1278	6.3	1383	6.8
2400	958	4.6	1077	5.3	1194	5.9	1305	6.4	1409	7.0
2550	1004	4.9	1115	5.4	1226	6.0	1334	6.6	1435	7.1
2700	1050	5.1	1155	5.7	1261	6.2	1364	6.7	1462	7.2
2850	1097	5.4	1197	5.9	1297	6.4	1395	6.9	1491	7.4
3000	1144	5.6	1239	6.1	1334	6.6	1429	7.1	1521	7.5

CFM	AVAILABLE EXTERNAL STATIC PRESSURE (in. wg)									
	1.2		1.4		1.6		1.8		2.0	
	rpm	vdc	rpm	vdc	rpm	vdc	rpm	vdc	rpm	vdc
1800	1403	6.9	1491	7.4	—	—	—	—	—	—
1950	1429	7.1	1517	7.5	—	—	—	—	—	—
2100	1454	7.2	1542	7.6	—	—	—	—	—	—
2250	1479	7.3	1568	7.8	—	—	—	—	—	—
2400	1504	7.4	1593	7.9	—	—	—	—	—	—
2550	1529	7.6	1618	8.0	—	—	—	—	—	—
2700	1555	7.7	1643	8.2	—	—	—	—	—	—
2850	1582	7.9	1668	8.3	—	—	—	—	—	—
3000	1610	8.0	1695	8.4	—	—	—	—	—	—

Medium Static 788-1695 rpm

Table 30 — 40RLQA07 High Static Fan Data (rpm - vdc)

CFM	AVAILABLE EXTERNAL STATIC PRESSURE (in. wg)									
	0.2		0.4		0.6		0.8		1.0	
	rpm	vdc	rpm	vdc	rpm	vdc	rpm	vdc	rpm	vdc
1800	788	3.5	942	4.2	1081	4.8	1202	5.4	1308	5.9
1950	828	3.7	973	4.3	1107	5.0	1227	5.5	1333	6.0
2100	870	3.9	1005	4.5	1134	5.1	1252	5.6	1358	6.1
2250	914	4.1	1040	4.6	1163	5.2	1278	5.7	1383	6.2
2400	958	4.3	1077	4.8	1194	5.4	1305	5.9	1409	6.3
2550	1004	4.5	1115	5.0	1226	5.5	1334	6.0	1435	6.5
2700	1050	4.7	1155	5.2	1261	5.7	1364	6.1	1462	6.6
2850	1097	4.9	1197	5.4	1297	5.8	1395	6.3	1491	6.7
3000	1144	5.1	1239	5.6	1334	6.0	1429	6.4	1521	6.9

CFM	AVAILABLE EXTERNAL STATIC PRESSURE (in. wg)									
	1.2		1.4		1.6		1.8		2.0	
	rpm	vdc	rpm	vdc	rpm	vdc	rpm	vdc	rpm	vdc
1800	1403	6.3	1491	6.7	1571	7.1	1647	7.4	1718	7.8
1950	1429	6.4	1517	6.8	1598	7.2	1674	7.6	1745	7.9
2100	1454	6.6	1542	7.0	1624	7.3	1700	7.7	1772	8.0
2250	1479	6.7	1568	7.1	1650	7.5	1726	7.8	1799	8.1
2400	1504	6.8	1593	7.2	1675	7.6	1752	7.9	1825	8.3
2550	1529	6.9	1618	7.3	1700	7.7	1777	8.0	1850	8.4
2700	1555	7.0	1643	7.4	1725	7.8	1802	8.2	1875	8.5
2850	1582	7.1	1668	7.5	1750	7.9	1827	8.3	1900	8.6
3000	1610	7.3	1695	7.7	1775	8.0	1852	8.4	1925	8.7

High Static 788-1925 rpm

Table 31 — 40RLQA08 Fan Data (rpm - bhp)

CFM	AVAILABLE EXTERNAL STATIC PRESSURE (in. wg)									
	0.2		0.4		0.6		0.8		1.0	
	rpm	bhp	rpm	bhp	rpm	bhp	rpm	bhp	rpm	bhp
2250	884	0.23	1009	0.37	1131	0.54	1247	0.74	1354	0.95
2440	937	0.27	1053	0.42	1168	0.59	1279	0.79	1383	1.01
2625	991	0.32	1099	0.47	1206	0.64	1311	0.84	1412	1.07
2815	1048	0.37	1149	0.53	1249	0.70	1348	0.90	1445	1.13
3000	1103	0.43	1199	0.59	1293	0.77	1386	0.97	1478	1.20
3190	1161	0.50	1252	0.66	1340	0.85	1428	1.05	1516	1.28
3375	1218	0.57	1304	0.74	1388	0.93	1471	1.14	1554	1.37
3565	1277	0.66	1359	0.83	1438	1.02	1517	1.24	1596	1.47
3750	1335	0.75	1413	0.93	1489	1.13	1564	1.34	1639	1.58

CFM	AVAILABLE EXTERNAL STATIC PRESSURE (in. wg)									
	1.2		1.4		1.6		1.8		2.0	
	rpm	bhp	rpm	bhp	rpm	bhp	rpm	bhp	rpm	bhp
2250	1452	1.18	1542	1.43	1625	1.68	1703	1.94	1776	2.21
2440	1480	1.25	1570	1.50	1653	1.76	1731	2.03	1805	2.31
2625	1507	1.31	1597	1.57	1680	1.83	1759	2.11	1833	2.40
2815	1537	1.38	1625	1.64	1708	1.91	1787	2.20	1861	2.50
3000	1568	1.45	1654	1.72	1736	2.00	1814	2.29	1888	2.60
3190	1602	1.54	1685	1.80	1765	2.09	1842	2.39	1916	2.70
3375	1636	1.62	1717	1.90	1795	2.18	1871	2.49	1944	2.81
3565	1675	1.73	1752	2.00	1828	2.29	1902	2.60	1973	2.92
3750	1714	1.83	1788	2.11	1862	2.41	1933	2.71	2003	3.04

Medium Static 884-1788 rpm, 2.11 Max bhp

High Static 884-2003 rpm, 3.04 Max bhp

Table 32 — 40RLQA08 Medium Static Fan Data (rpm - vdc)

CFM	AVAILABLE EXTERNAL STATIC PRESSURE (in. wg)									
	0.2		0.4		0.6		0.8		1.0	
	rpm	vdc	rpm	vdc	rpm	vdc	rpm	vdc	rpm	vdc
2250	884	4.3	1009	4.9	1131	5.5	1247	6.1	1354	6.7
2440	937	4.5	1053	5.1	1168	5.7	1279	6.3	1383	6.8
2625	991	4.8	1099	5.4	1206	5.9	1311	6.5	1412	7.0
2815	1048	5.1	1149	5.6	1249	6.1	1348	6.6	1445	7.1
3000	1103	5.4	1199	5.9	1293	6.4	1386	6.8	1478	7.3
3190	1161	5.7	1252	6.2	1340	6.6	1428	7.1	1516	7.5
3375	1218	6.0	1304	6.4	1388	6.9	1471	7.3	1554	7.7
3565	1277	6.3	1359	6.7	1438	7.1	1517	7.5	1596	7.9
3750	1335	6.6	1413	7.0	1489	7.4	1564	7.8	1639	8.1

CFM	AVAILABLE EXTERNAL STATIC PRESSURE (in. wg)									
	1.2		1.4		1.6		1.8		2.0	
	rpm	vdc	rpm	vdc	rpm	vdc	rpm	vdc	rpm	vdc
2250	1452	7.2	1542	7.6	—	—	—	—	—	—
2440	1480	7.3	1570	7.8	—	—	—	—	—	—
2625	1507	7.5	1597	7.9	—	—	—	—	—	—
2815	1537	7.6	1625	8.1	—	—	—	—	—	—
3000	1568	7.8	1654	8.2	—	—	—	—	—	—
3190	1602	8.0	1685	8.4	—	—	—	—	—	—
3375	1636	8.1	1717	8.5	—	—	—	—	—	—
3565	1675	8.3	1752	8.7	—	—	—	—	—	—
3750	1714	8.5	1788	8.9	—	—	—	—	—	—

Medium Static 884-1788 rpm

Table 33 — 40RLQA08 High Static Fan Data (rpm - vdc)

CFM	AVAILABLE EXTERNAL STATIC PRESSURE (in. wg)									
	0.2		0.4		0.6		0.8		1.0	
	rpm	vdc	rpm	vdc	rpm	vdc	rpm	vdc	rpm	vdc
2250	884	3.9	1009	4.5	1131	5.1	1247	5.6	1354	6.1
2440	937	4.2	1053	4.7	1168	5.2	1279	5.7	1383	6.2
2625	991	4.4	1099	4.9	1206	5.4	1311	5.9	1412	6.4
2815	1048	4.7	1149	5.1	1249	5.6	1348	6.1	1445	6.5
3000	1103	4.9	1199	5.4	1293	5.8	1386	6.2	1478	6.7
3190	1161	5.2	1252	5.6	1340	6.0	1428	6.4	1516	6.8
3375	1218	5.5	1304	5.9	1388	6.3	1471	6.6	1554	7.0
3565	1277	5.7	1359	6.1	1438	6.5	1517	6.8	1596	7.2
3750	1335	6.0	1413	6.4	1489	6.7	1564	7.1	1639	7.4

CFM	AVAILABLE EXTERNAL STATIC PRESSURE (in. wg)									
	1.2		1.4		1.6		1.8		2.0	
	rpm	vdc	rpm	vdc	rpm	vdc	rpm	vdc	rpm	vdc
2250	1452	6.5	1542	7.0	1625	7.3	1703	7.7	1776	8.0
2440	1480	6.7	1570	7.1	1653	7.5	1731	7.8	1805	8.2
2625	1507	6.8	1597	7.2	1680	7.6	1759	8.0	1833	8.3
2815	1537	6.9	1625	7.3	1708	7.7	1787	8.1	1861	8.4
3000	1568	7.1	1654	7.5	1736	7.9	1814	8.2	1888	8.6
3190	1602	7.2	1685	7.6	1765	8.0	1842	8.3	1916	8.7
3375	1636	7.4	1717	7.8	1795	8.1	1871	8.5	1944	8.8
3565	1675	7.6	1752	7.9	1828	8.3	1902	8.6	1973	9.0
3750	1714	7.8	1788	8.1	1862	8.4	1933	8.8	2003	9.1

High Static 884-2003 rpm

Table 34 — 40RLQA12 Fan Data (rpm - bhp)

CFM	AVAILABLE EXTERNAL STATIC PRESSURE (in. wg)									
	0.2		0.4		0.6		0.8		1.0	
	rpm	bhp	rpm	bhp	rpm	bhp	rpm	bhp	rpm	bhp
3000	1080	0.40	1175	0.55	1268	0.72	1361	0.92	1453	1.14
3250	1154	0.48	1243	0.64	1329	0.81	1415	1.01	1501	1.24
3500	1229	0.57	1312	0.74	1393	0.92	1473	1.13	1553	1.35
3750	1305	0.68	1384	0.86	1459	1.04	1534	1.25	1609	1.48
4000	1381	0.80	1456	0.99	1527	1.18	1598	1.40	1668	1.63
4250	1458	0.94	1529	1.13	1597	1.34	1664	1.56	1730	1.79
4500	1535	1.09	1603	1.29	1668	1.50	1731	1.73	1794	1.97
4750	1613	1.26	1678	1.47	1740	1.69	1800	1.92	1860	2.17
5000	1691	1.45	1753	1.67	1813	1.90	1870	2.14	1927	2.39

CFM	AVAILABLE EXTERNAL STATIC PRESSURE (in. wg)									
	1.2		1.4		1.6		1.8		2.0	
	rpm	bhp	rpm	bhp	rpm	bhp	rpm	bhp	rpm	bhp
3000	1543	1.38	1629	1.64	1712	1.91	1791	2.20	1866	2.50
3250	1586	1.48	1668	1.74	1748	2.02	1825	2.31	1899	2.62
3500	1632	1.59	1711	1.86	1787	2.14	1862	2.44	1935	2.75
3750	1683	1.73	1757	1.99	1830	2.28	1902	2.58	1972	2.89
4000	1738	1.88	1807	2.14	1877	2.43	1945	2.73	2013	3.05
4250	1795	2.04	1861	2.31	1927	2.60	1992	2.90	—	—
4500	1856	2.23	1918	2.50	1980	2.79	2042	3.09	—	—
4750	1919	2.43	1977	2.71	2036	3.00	—	—	—	—
5000	1983	2.66	2039	2.94	—	—	—	—	—	—

Medium Static 1080-1918 rpm, 2.50 Max bhp

High Static 1080-2013 rpm, 3.05 Max bhp

Table 35 — 40RLQA12 Medium Static Fan Data (rpm - vdc)

CFM	AVAILABLE EXTERNAL STATIC PRESSURE (in. wg)									
	0.2		0.4		0.6		0.8		1.0	
	rpm	vdc	rpm	vdc	rpm	vdc	rpm	vdc	rpm	vdc
3000	1080	5.3	1175	5.8	1268	6.2	1361	6.7	1453	7.2
3250	1154	5.6	1243	6.1	1329	6.5	1415	7.0	1501	7.4
3500	1229	6.0	1312	6.5	1393	6.9	1473	7.3	1553	7.7
3750	1305	6.4	1384	6.8	1459	7.2	1534	7.6	1609	8.0
4000	1381	6.8	1456	7.2	1527	7.6	1598	7.9	1668	8.3
4250	1458	7.2	1529	7.6	1597	7.9	1664	8.3	1730	8.6
4500	1535	7.6	1603	8.0	1668	8.3	1731	8.6	1794	8.9
4750	1613	8.0	1678	8.3	1740	8.7	1800	9.0	1860	9.3
5000	1691	8.4	1753	8.7	1813	9.0	1870	9.3	1927	9.6

CFM	AVAILABLE EXTERNAL STATIC PRESSURE (in. wg)									
	1.2		1.4		1.6		1.8		2.0	
	rpm	vdc	rpm	vdc	rpm	vdc	rpm	vdc	rpm	vdc
3000	1543	7.6	1629	8.1	—	—	—	—	—	—
3250	1586	7.9	1668	8.3	—	—	—	—	—	—
3500	1632	8.1	1711	8.5	—	—	—	—	—	—
3750	1683	8.4	1757	8.8	—	—	—	—	—	—
4000	1738	8.7	1807	9.0	—	—	—	—	—	—
4250	1795	8.9	1861	9.3	—	—	—	—	—	—
4500	1856	9.3	1918	9.6	—	—	—	—	—	—
4750	1919	9.6	—	—	—	—	—	—	—	—
5000	—	—	—	—	—	—	—	—	—	—

Medium Static 1080-1918 rpm

Table 36 — 40RLQA12 High Static Fan Data (rpm - vdc)

CFM	AVAILABLE EXTERNAL STATIC PRESSURE (in. wg)									
	0.2		0.4		0.6		0.8		1.0	
	rpm	vdc	rpm	vdc	rpm	vdc	rpm	vdc	rpm	vdc
3000	1080	4.8	1175	5.3	1268	5.7	1361	6.1	1453	6.6
3250	1154	5.2	1243	5.6	1329	6.0	1415	6.4	1501	6.8
3500	1229	5.5	1312	5.9	1393	6.3	1473	6.6	1553	7.0
3750	1305	5.9	1384	6.2	1459	6.6	1534	6.9	1609	7.3
4000	1381	6.2	1456	6.6	1527	6.9	1598	7.2	1668	7.5
4250	1458	6.6	1529	6.9	1597	7.2	1664	7.5	1730	7.8
4500	1535	6.9	1603	7.2	1668	7.5	1731	7.8	1794	8.1
4750	1613	7.3	1678	7.6	1740	7.9	1800	8.2	1860	8.4
5000	1691	7.7	1753	7.9	1813	8.2	1870	8.5	1927	8.7

CFM	AVAILABLE EXTERNAL STATIC PRESSURE (in. wg)									
	1.2		1.4		1.6		1.8		2.0	
	rpm	vdc	rpm	vdc	rpm	vdc	rpm	vdc	rpm	vdc
3000	1543	7.0	1629	7.4	1712	7.7	1791	8.1	1866	8.5
3250	1586	7.2	1668	7.5	1748	7.9	1825	8.3	1899	8.6
3500	1632	7.4	1711	7.7	1787	8.1	1862	8.4	1935	8.8
3750	1683	7.6	1757	8.0	1830	8.3	1902	8.6	1972	8.9
4000	1738	7.9	1807	8.2	1877	8.5	1945	8.8	2013	9.1
4250	1795	8.1	1861	8.4	1927	8.7	1992	9.0	—	—
4500	1856	8.4	1918	8.7	1980	9.0	2042	9.3	—	—
4750	1919	8.7	1977	9.0	2036	9.2	—	—	—	—
5000	1983	9.0	2039	9.3	—	—	—	—	—	—

High Static 1080-2013 rpm

Table 37 — 40RLSA08 Fan Data (rpm - bhp)

CFM	AVAILABLE EXTERNAL STATIC PRESSURE (in. wg)									
	0.2		0.4		0.6		0.8		1.0	
	rpm	bhp	rpm	bhp	rpm	bhp	rpm	bhp	rpm	bhp
2250	850	0.20	975	0.33	1096	0.49	1210	0.67	1315	0.87
2440	900	0.24	1017	0.37	1130	0.53	1239	0.71	1342	0.92
2625	951	0.27	1060	0.41	1167	0.57	1270	0.76	1369	0.97
2815	1004	0.32	1107	0.46	1207	0.62	1305	0.81	1400	1.02
3000	1056	0.37	1154	0.51	1248	0.68	1341	0.87	1432	1.08
3190	1111	0.42	1203	0.57	1292	0.74	1380	0.94	1467	1.15
3375	1165	0.48	1253	0.64	1337	0.81	1421	1.01	1503	1.23
3565	1221	0.55	1304	0.71	1385	0.89	1464	1.09	1543	1.31
3750	1275	0.62	1355	0.79	1432	0.97	1508	1.18	1583	1.40

CFM	AVAILABLE EXTERNAL STATIC PRESSURE (in. wg)									
	1.2		1.4		1.6		1.8		2.0	
	rpm	bhp	rpm	bhp	rpm	bhp	rpm	bhp	rpm	bhp
2250	1412	1.09	1503	1.32	1587	1.56	1666	1.81	1740	2.08
2440	1437	1.14	1527	1.37	1611	1.62	1690	1.88	1765	2.15
2625	1463	1.19	1551	1.43	1634	1.68	1713	1.95	1788	2.22
2815	1490	1.25	1577	1.49	1659	1.75	1738	2.02	1812	2.30
3000	1519	1.31	1604	1.56	1685	1.82	1762	2.09	1836	2.38
3190	1551	1.38	1633	1.63	1712	1.90	1788	2.18	1861	2.47
3375	1584	1.46	1663	1.71	1740	1.98	1815	2.26	1886	2.55
3565	1621	1.55	1697	1.80	1771	2.07	1843	2.35	1914	2.65
3750	1658	1.64	1731	1.90	1803	2.17	1873	2.45	1942	2.75

Medium Static 850-1731 rpm, 1.90 Max bhp

High Static 850-1942 rpm, 2.75 Max bhp

Table 38 — 40RLSA08 Medium Static Fan Data (rpm - vdc)

CFM	AVAILABLE EXTERNAL STATIC PRESSURE (in. wg)									
	0.2		0.4		0.6		0.8		1.0	
	rpm	vdc	rpm	vdc	rpm	vdc	rpm	vdc	rpm	vdc
2250	850	4.1	975	4.7	1096	5.4	1210	5.9	1315	6.5
2440	900	4.3	1017	4.9	1130	5.5	1239	6.1	1342	6.6
2625	951	4.6	1060	5.2	1167	5.7	1270	6.2	1369	6.8
2815	1004	4.9	1107	5.4	1207	5.9	1305	6.4	1400	6.9
3000	1056	5.1	1154	5.6	1248	6.1	1341	6.6	1432	7.1
3190	1111	5.4	1203	5.9	1292	6.4	1380	6.8	1467	7.3
3375	1165	5.7	1253	6.2	1337	6.6	1421	7.0	1503	7.4
3565	1221	6.0	1304	6.4	1385	6.8	1464	7.2	1543	7.6
3750	1275	6.3	1355	6.7	1432	7.1	1508	7.5	1583	7.9

CFM	AVAILABLE EXTERNAL STATIC PRESSURE (in. wg)									
	1.2		1.4		1.6		1.8		2.0	
	rpm	vdc	rpm	vdc	rpm	vdc	rpm	vdc	rpm	vdc
2250	1412	7.0	1503	7.4	—	—	—	—	—	—
2440	1437	7.1	1527	7.6	—	—	—	—	—	—
2625	1463	7.2	1551	7.7	—	—	—	—	—	—
2815	1490	7.4	1577	7.8	—	—	—	—	—	—
3000	1519	7.5	1604	8.0	—	—	—	—	—	—
3190	1551	7.7	1633	8.1	—	—	—	—	—	—
3375	1584	7.9	1663	8.3	—	—	—	—	—	—
3565	1621	8.1	1697	8.4	—	—	—	—	—	—
3750	1658	8.2	1731	8.6	—	—	—	—	—	—

Medium Static 850-1731 rpm

Table 39 — 40RLSA08 High Static Fan Data (rpm - vdc)

CFM	AVAILABLE EXTERNAL STATIC PRESSURE (in. wg)									
	0.2		0.4		0.6		0.8		1.0	
	rpm	vdc	rpm	vdc	rpm	vdc	rpm	vdc	rpm	vdc
2250	850	3.8	975	4.3	1096	4.9	1210	5.4	1315	5.9
2440	900	4.0	1017	4.5	1130	5.1	1239	5.6	1342	6.0
2625	951	4.2	1060	4.7	1167	5.2	1270	5.7	1369	6.2
2815	1004	4.5	1107	5.0	1207	5.4	1305	5.9	1400	6.3
3000	1056	4.7	1154	5.2	1248	5.6	1341	6.0	1432	6.5
3190	1111	5.0	1203	5.4	1292	5.8	1380	6.2	1467	6.6
3375	1165	5.2	1253	5.6	1337	6.0	1421	6.4	1503	6.8
3565	1221	5.5	1304	5.9	1385	6.2	1464	6.6	1543	7.0
3750	1275	5.7	1355	6.1	1432	6.5	1508	6.8	1583	7.2

CFM	AVAILABLE EXTERNAL STATIC PRESSURE (in. wg)									
	1.2		1.4		1.6		1.8		2.0	
	rpm	vdc	rpm	vdc	rpm	vdc	rpm	vdc	rpm	vdc
2250	1412	6.4	1503	6.8	1587	7.2	1666	7.5	1740	7.9
2440	1437	6.5	1527	6.9	1611	7.3	1690	7.6	1765	8.0
2625	1463	6.6	1551	7.0	1634	7.4	1713	7.8	1788	8.1
2815	1490	6.7	1577	7.1	1659	7.5	1738	7.9	1812	8.2
3000	1519	6.9	1604	7.2	1685	7.6	1762	8.0	1836	8.3
3190	1551	7.0	1633	7.4	1712	7.7	1788	8.1	1861	8.4
3375	1584	7.2	1663	7.5	1740	7.9	1815	8.2	1886	8.6
3565	1621	7.3	1697	7.7	1771	8.0	1843	8.4	1914	8.7
3750	1658	7.5	1731	7.8	1803	8.2	1873	8.5	1942	8.8

High Static 850-1942 rpm

Table 40 — 40RLSA10 Fan Data (rpm - bhp)

CFM	AVAILABLE EXTERNAL STATIC PRESSURE (in. wg)									
	0.2		0.4		0.6		0.8		1.0	
	rpm	bhp	rpm	bhp	rpm	bhp	rpm	bhp	rpm	bhp
2550	929	0.26	1041	0.39	1151	0.55	1256	0.74	1357	0.94
2765	989	0.30	1093	0.44	1195	0.61	1294	0.80	1390	1.00
2975	1048	0.36	1146	0.50	1241	0.67	1335	0.86	1426	1.07
3190	1110	0.42	1202	0.57	1291	0.74	1379	0.94	1465	1.15
3400	1171	0.49	1257	0.64	1342	0.82	1425	1.02	1507	1.23
3615	1234	0.57	1316	0.73	1396	0.91	1474	1.11	1552	1.33
3825	1296	0.65	1374	0.82	1450	1.01	1525	1.21	1598	1.43
4040	1360	0.75	1435	0.92	1507	1.12	1578	1.32	1648	1.55
4250	1423	0.86	1494	1.03	1563	1.23	1631	1.44	1698	1.67

CFM	AVAILABLE EXTERNAL STATIC PRESSURE (in. wg)									
	1.2		1.4		1.6		1.8		2.0	
	rpm	bhp	rpm	bhp	rpm	bhp	rpm	bhp	rpm	bhp
2550	1451	1.17	1540	1.40	1624	1.65	1703	1.92	1777	2.19
2765	1482	1.23	1569	1.47	1651	1.73	1730	2.00	1804	2.27
2975	1514	1.30	1599	1.55	1680	1.81	1757	2.08	1831	2.36
3190	1550	1.38	1632	1.63	1711	1.89	1786	2.17	1859	2.46
3400	1587	1.47	1666	1.72	1743	1.99	1817	2.27	1888	2.56
3615	1629	1.57	1704	1.82	1778	2.09	1850	2.37	1920	2.67
3825	1672	1.67	1744	1.93	1815	2.20	1884	2.49	1952	2.79
4040	1718	1.79	1786	2.05	1855	2.33	1922	2.62	1987	2.92
4250	1765	1.92	1831	2.19	1896	2.46	1960	2.75	2024	3.06

Medium Static 929-1831 rpm, 2.19 Max bhp

High Static 929-2024 rpm, 3.06 Max bhp

Table 41 — 40RLSA10 Medium Static Fan Data (rpm - vdc)

CFM	AVAILABLE EXTERNAL STATIC PRESSURE (in. wg)									
	0.2		0.4		0.6		0.8		1.0	
	rpm	vdc	rpm	vdc	rpm	vdc	rpm	vdc	rpm	vdc
2550	929	4.5	1041	5.1	1151	5.6	1256	6.2	1357	6.7
2765	989	4.8	1093	5.3	1195	5.9	1294	6.4	1390	6.9
2975	1048	5.1	1146	5.6	1241	6.1	1335	6.6	1426	7.0
3190	1110	5.4	1202	5.9	1291	6.4	1379	6.8	1465	7.2
3400	1171	5.7	1257	6.2	1342	6.6	1425	7.0	1507	7.5
3615	1234	6.1	1316	6.5	1396	6.9	1474	7.3	1552	7.7
3825	1296	6.4	1374	6.8	1450	7.2	1525	7.6	1598	7.9
4040	1360	6.7	1435	7.1	1507	7.5	1578	7.8	1648	8.2
4250	1423	7.0	1494	7.4	1563	7.8	1631	8.1	1698	8.4

CFM	AVAILABLE EXTERNAL STATIC PRESSURE (in. wg)									
	1.2		1.4		1.6		1.8		2.0	
	rpm	vdc	rpm	vdc	rpm	vdc	rpm	vdc	rpm	vdc
2550	1451	7.2	1540	7.6	—	—	—	—	—	—
2765	1482	7.3	1569	7.8	—	—	—	—	—	—
2975	1514	7.5	1599	7.9	—	—	—	—	—	—
3190	1550	7.7	1632	8.1	—	—	—	—	—	—
3400	1587	7.9	1666	8.3	—	—	—	—	—	—
3615	1629	8.1	1704	8.5	—	—	—	—	—	—
3825	1672	8.3	1744	8.7	—	—	—	—	—	—
4040	1718	8.5	1786	8.9	—	—	—	—	—	—
4250	1765	8.8	1831	9.1	—	—	—	—	—	—

Medium Static 929-1831 rpm

Table 42 — 40RLSA10 High Static Fan Data (rpm - vdc)

CFM	AVAILABLE EXTERNAL STATIC PRESSURE (in. wg)									
	0.2		0.4		0.6		0.8		1.0	
	rpm	vdc	rpm	vdc	rpm	vdc	rpm	vdc	rpm	vdc
2550	929	4.1	1041	4.7	1151	5.2	1256	5.6	1357	6.1
2765	989	4.4	1093	4.9	1195	5.4	1294	5.8	1390	6.3
2975	1048	4.7	1146	5.1	1241	5.6	1335	6.0	1426	6.4
3190	1110	5.0	1202	5.4	1291	5.8	1379	6.2	1465	6.6
3400	1171	5.3	1257	5.6	1342	6.0	1425	6.4	1507	6.8
3615	1234	5.5	1316	5.9	1396	6.3	1474	6.6	1552	7.0
3825	1296	5.8	1374	6.2	1450	6.5	1525	6.9	1598	7.2
4040	1360	6.1	1435	6.5	1507	6.8	1578	7.1	1648	7.5
4250	1423	6.4	1494	6.7	1563	7.1	1631	7.4	1698	7.7

CFM	AVAILABLE EXTERNAL STATIC PRESSURE (in. wg)									
	1.2		1.4		1.6		1.8		2.0	
	rpm	vdc	rpm	vdc	rpm	vdc	rpm	vdc	rpm	vdc
2550	1451	6.5	1540	7.0	1624	7.3	1703	7.7	1777	8.0
2765	1482	6.7	1569	7.1	1651	7.5	1730	7.8	1804	8.2
2975	1514	6.8	1599	7.2	1680	7.6	1757	8.0	1831	8.3
3190	1550	7.0	1632	7.4	1711	7.7	1786	8.1	1859	8.4
3400	1587	7.2	1666	7.5	1743	7.9	1817	8.2	1888	8.6
3615	1629	7.4	1704	7.7	1778	8.1	1850	8.4	1920	8.7
3825	1672	7.6	1744	7.9	1815	8.2	1884	8.5	1952	8.9
4040	1718	7.8	1786	8.1	1855	8.4	1922	8.7	1987	9.0
4250	1765	8.0	1831	8.3	1896	8.6	1960	8.9	2024	9.2

High Static 929-2024 rpm

Table 43 — 40RLSA12 Fan Data (rpm - bhp)

CFM	AVAILABLE EXTERNAL STATIC PRESSURE (in. wg)									
	0.2		0.4		0.6		0.8		1.0	
	rpm	bhp	rpm	bhp	rpm	bhp	rpm	bhp	rpm	bhp
3000	1049	0.36	1146	0.50	1240	0.67	1333	0.85	1424	1.06
3250	1120	0.43	1211	0.58	1299	0.75	1385	0.94	1470	1.15
3500	1193	0.51	1278	0.67	1360	0.85	1440	1.04	1520	1.25
3750	1266	0.61	1346	0.77	1423	0.95	1499	1.15	1574	1.37
4000	1340	0.71	1415	0.88	1488	1.07	1560	1.28	1630	1.50
4250	1414	0.84	1486	1.01	1555	1.21	1623	1.42	1689	1.64
4500	1489	0.97	1557	1.15	1623	1.36	1687	1.57	1751	1.81
4750	1564	1.12	1629	1.31	1692	1.52	1753	1.74	1814	1.98
5000	1639	1.28	1702	1.49	1762	1.70	1820	1.93	1878	2.17

CFM	AVAILABLE EXTERNAL STATIC PRESSURE (in. wg)									
	1.2		1.4		1.6		1.8		2.0	
	rpm	bhp	rpm	bhp	rpm	bhp	rpm	bhp	rpm	bhp
3000	1512	1.29	1596	1.54	1677	1.79	1754	2.06	1828	2.35
3250	1553	1.38	1634	1.63	1712	1.89	1788	2.17	1861	2.46
3500	1599	1.49	1676	1.74	1751	2.00	1824	2.28	1895	2.58
3750	1648	1.61	1721	1.86	1793	2.13	1863	2.41	1932	2.71
4000	1700	1.74	1770	2.00	1838	2.27	1906	2.55	1972	2.85
4250	1756	1.89	1822	2.15	1887	2.42	1951	2.71	2015	3.01
4500	1814	2.05	1876	2.31	1938	2.59	2000	2.89	2060	3.19
4750	1874	2.23	1933	2.50	1992	2.78	2051	3.08	—	—
5000	1935	2.43	1992	2.70	2048	2.98	—	—	—	—

Medium Static 1049-1933 rpm, 2.50 Max bhp

High Static 1049-2060 rpm, 3.19 Max bhp

Table 44 — 40RLSA12 Medium Static Fan Data (rpm - vdc)

CFM	AVAILABLE EXTERNAL STATIC PRESSURE (in. wg)									
	0.2		0.4		0.6		0.8		1.0	
	rpm	vdc	rpm	vdc	rpm	vdc	rpm	vdc	rpm	vdc
3000	1049	5.1	1146	5.6	1240	6.1	1333	6.6	1424	7.0
3250	1120	5.5	1211	5.9	1299	6.4	1385	6.8	1470	7.3
3500	1193	5.8	1278	6.3	1360	6.7	1440	7.1	1520	7.5
3750	1266	6.2	1346	6.6	1423	7.0	1499	7.4	1574	7.8
4000	1340	6.6	1415	7.0	1488	7.4	1560	7.7	1630	8.1
4250	1414	7.0	1486	7.4	1555	7.7	1623	8.1	1689	8.4
4500	1489	7.4	1557	7.7	1623	8.1	1687	8.4	1751	8.7
4750	1564	7.8	1629	8.1	1692	8.4	1753	8.7	1814	9.0
5000	1639	8.1	1702	8.5	1762	8.8	1820	9.1	1878	9.4

CFM	AVAILABLE EXTERNAL STATIC PRESSURE (in. wg)									
	1.2		1.4		1.6		1.8		2.0	
	rpm	vdc	rpm	vdc	rpm	vdc	rpm	vdc	rpm	vdc
3000	1512	7.5	1596	7.9	—	—	—	—	—	—
3250	1553	7.7	1634	8.1	—	—	—	—	—	—
3500	1599	7.9	1676	8.3	—	—	—	—	—	—
3750	1648	8.2	1721	8.6	—	—	—	—	—	—
4000	1700	8.5	1770	8.8	—	—	—	—	—	—
4250	1756	8.7	1822	9.1	—	—	—	—	—	—
4500	1814	9.0	1876	9.4	—	—	—	—	—	—
4750	1874	9.4	1933	9.7	—	—	—	—	—	—
5000	1935	9.7	—	—	—	—	—	—	—	—

Medium Static 1049-1933 rpm

Table 45 — 40RLSA12 High Static Fan Data (rpm - vdc)

CFM	AVAILABLE EXTERNAL STATIC PRESSURE (in. wg)									
	0.2		0.4		0.6		0.8		1.0	
	rpm	vdc	rpm	vdc	rpm	vdc	rpm	vdc	rpm	vdc
3000	1049	4.7	1146	5.1	1240	5.6	1333	6.0	1424	6.4
3250	1120	5.0	1211	5.4	1299	5.8	1385	6.2	1470	6.6
3500	1193	5.4	1278	5.7	1360	6.1	1440	6.5	1520	6.9
3750	1266	5.7	1346	6.1	1423	6.4	1499	6.8	1574	7.1
4000	1340	6.0	1415	6.4	1488	6.7	1560	7.0	1630	7.4
4250	1414	6.4	1486	6.7	1555	7.0	1623	7.3	1689	7.6
4500	1489	6.7	1557	7.0	1623	7.3	1687	7.6	1751	7.9
4750	1564	7.1	1629	7.4	1692	7.7	1753	7.9	1814	8.2
5000	1639	7.4	1702	7.7	1762	8.0	1820	8.2	1878	8.5

CFM	AVAILABLE EXTERNAL STATIC PRESSURE (in. wg)									
	1.2		1.4		1.6		1.8		2.0	
	rpm	vdc	rpm	vdc	rpm	vdc	rpm	vdc	rpm	vdc
3000	1512	6.8	1596	7.2	1677	7.6	1754	7.9	1828	8.3
3250	1553	7.0	1634	7.4	1712	7.7	1788	8.1	1861	8.4
3500	1599	7.2	1676	7.6	1751	7.9	1824	8.3	1895	8.6
3750	1648	7.5	1721	7.8	1793	8.1	1863	8.4	1932	8.8
4000	1700	7.7	1770	8.0	1838	8.3	1906	8.6	1972	8.9
4250	1756	8.0	1822	8.3	1887	8.6	1951	8.9	2015	9.1
4500	1814	8.2	1876	8.5	1938	8.8	2000	9.1	2060	9.4
4750	1874	8.5	1933	8.8	1992	9.0	2051	9.3	—	—
5000	1935	8.8	1992	9.0	2048	9.3	—	—	—	—

High Static 1049-2060 rpm

DECOMMISSIONING

Before carrying out this procedure, it is essential that the technician is completely familiar with the equipment and all its detail. It is recommended good practice that all refrigerants are recovered safely. Prior to the task being carried out, an oil and refrigerant sample shall be taken in case analysis is required prior to re-use of recovered refrigerant. It is essential that electrical power is available before the task is commenced.

1. Become familiar with the equipment and its operation.
2. Isolate the system electrically.
3. Before attempting the procedure, ensure that:
    a. Mechanical handling equipment is available, if required for handling refrigerant cylinders.
    b. All personal protective equipment is available and being used correctly.
    c. The recovery process is supervised at all times by a competent person.
    d. Recovery equipment and cylinders conform to the appropriate standards.
4. Pump down refrigerant system, if possible.
5. If a vacuum is not possible, make a manifold so that r ant can be removed from various parts of the system.
6. Make sure that the cylinder is situated on the scales before recovery takes place.
7. Start the recovery machine and operate in accordance with instructions.
8. Do not overfill cylinders (no more than 80% of volume liquid charge).
9. Do not exceed the maximum working pressure of the cylinder, even temporarily.
10. When the cylinders have been filled correctly and the process completed, make sure that the cylinders and the equipment are removed from the site promptly and all isolation valves on the equipment are closed off.
11. Recovered refrigerant shall not be charged into another refrigerating system unless it has been cleaned and checked.

Equipment shall be labeled that it has been de-commissioned and emptied of refrigerant. The label shall be dated and signed. For appliances containing flammable refrigerants, ensure that there are labels on the equipment stating the equipment contains flammable refrigerant.

© 2025 Carrier

START-UP CHECKLIST
(SPLIT SYSTEMS WITH 40RL UNITS)

NOTE: To avoid injury to personnel and damage to equipment or property when completing the procedures listed in this start-up checklist, use good judgment, follow safe practices, and adhere to the safety considerations/information as outlined in preceding sections of this Installation, Start-Up, and Service document.

I. PRELIMINARY INFORMATION

OUTDOOR:
MODEL NO. _____
SERIAL NO. _____
INDOOR:
MODEL NO. _____
SERIAL NO. _____
ADDITIONAL ACCESSORIES _____
_____

II. PRE-START-UP

OUTDOOR UNIT

Is there any shipping damage?
If so, where:_____
_____

Will this damage prevent unit start-up?	(Y/N) _____
Check power supply. Does it agree with unit?	(Y/N) _____
Has the ground wire been connected?	(Y/N) _____
Has ground integrity been verified with a continuity test?	(Y/N) _____
Has the circuit protection been sized and installed properly?	(Y/N) _____
Are the power wires to the unit sized and installed properly?	(Y/N) _____
Have compressor holddown bolts been loosened?	(Y/N) _____
CONTROLS	
Are thermostat(s) & indoor fan control wiring connections made & checked?	(Y/N) _____
Are all wiring terminals (including main power supply) tight?	(Y/N) _____
Have outdoor unit crankcase heaters been energized for 24 hours?	(Y/N) _____
INDOOR UNIT	
Has water been placed in drain pan to confirm proper drainage?	(Y/N) _____
Are proper air filters in place?	(Y/N) _____
PIPING	
40RLA, 40RLQ	
Has foam shipping block been removed from the TXV (Thermostatic Expansion Valve)?	(Y/N) _____
Are Liquid Line Solenoid Valves located at the indoor unit or outdoor unit coils as required?	(Y/N) _____
Have leak checks been made at compressors, condensers, indoor coils, TXVs (Thermostatic Expansion Valves) solenoid valves, filter driers, and fusible plugs with a leak detector?	(Y/N) _____
Locate, repair, and report any leaks.	_____
Have all compressor service valves been fully opened (backseated)	(Y/N) _____
Are the compressor oil sight glasses showing correct levels?	(Y/N) _____
40RLS	
Has air been bled from system?	(Y/N) _____
Have leak checks been made at compressors, chillers, valves, & indoor coils?	(Y/N) _____
Locate, repair, and report any leaks.	_____

CHECK VOLTAGE IMBALANCE

LINE-TO-LINEV OLTS: AB_____ V AC_____ V BC_____ V

(AB + AC + BC) / 3 = Average Voltage = _____V

Maximum deviation from average voltage = _____V

Voltage imbalance = 100 x (Max Deviation) / (Average Voltage) = _____

IF OVER 2% VOLTAGE IMBALANCE, DO NOT ATTEMPT TO START SYSTEM!

CALL LOCAL POWER COMPANY FOR ASSISTANCE.

III. START-UP

Check indoor fan motor speed and record.

After at least 10 minutes running time, record the following measurements:

	COMP A1	COMP B1
Oil pressure	_____	_____
Suction pressure	_____	_____
Suction line temp	_____	_____
Discharge pressure	_____	_____
Discharge line temp	_____	_____
Entering outdoor unit air temp	_____	_____
Leaving outdoor unit air temp	_____	_____
Indoor unit entering air DB temp	_____	_____
Indoor unit entering air WB temp	_____	_____
Indoor unit leaving air DB temp	_____	_____
Indoor unit leaving air WB temp	_____	_____
Outdoor unit entering water temp (40RLS only)	_____	_____
Outdoor unit leaving water temp (40RLS only)	_____	_____
Indoor unit entering water temp (40RLS only)	_____	_____
Indoor unit leaving water temp (40RLS only)	_____	_____
Compressor amps (L1/L2/L3)	____/____/____	____/____/____

Check the compressor oil level sight glasses: are the sight glasses showing oil level at 1/8 to 1/3 full? (Y/N) _____

NOTES:

_____

_____

_____

_____

_____

_____

CUT ALONG DOTTED LINE

CUT ALONG DOTTED LINE

© 2025 Carrier

SUBMITTAL

Project

Climatec - City of Esc - Public Works Yard

Date

Saturday, April 12, 2025

Shawn Harlan
Sigler - Brea
205 Puente Street
Brea CA

Table Of Contents

Project: Climatec - City of Esc - Public Works Yard 04/12/2025
Prepared By: Shawn Harlan

ID 6 **3**
Unit Report 4
Performance Summary 5
System Parameters 5
Electrical Data 5
Acoustic Summary 6
Certified Drawing 7

ID 6

Submittal Cover Sheet
Unit Report
Performance Summary Report
Acoustic Summary
Certified Drawings

Unit Report For ID 6

Project: Climatec - City of Esc - Public Works Yard 04/12/2025
Prepared By: Shawn Harlan

Outdoor Unit Parameters

Unit Model:	**27SCA**	
Unit Size:	**1.5 Tons (Size 18)**	
Voltage:	**208/230-1-60**	V-Ph-Hz

Indoor Coil Parameters

Unit Model:	**FT5A**	
Unit Size:	**24,000 Btuh**	
Cabinet Insulation:	**Singular, TXV**	
Voltage:	**208-1-60**	V-Ph-Hz
Refrigerant Type:	**Puron Advance**	
Heating Size:	**No Heat**	

Outdoor Unit Dimensions and Weight

Unit Length:	**31.1875**	in
Unit Width:	**31.1875**	in
Unit Height:	**32.0625**	in
Unit Shipping Weight:	**169.**	lb

Indoor Coil Dimensions and Weight

Unit Length:	**22.06**	in
Unit Width:	**17.6**	in
Unit Height:	**42.69**	in
Unit Shipping Weight:	**124.**	lb

RESIDENTIAL APPLICATIONS

This warranty is to the original purchasing owner and subsequent owners only to the extent and as stated in the Warranty Conditions and below. The limited warranty period in years, depending on the part and the claimant, is as shown in the table below.

Limited Warranty (Years)		
Item	**Original Owner**	**Subsequent Owner**
Parts	10* (or 5)	5
Compressor	10* (or 5)	5

***If properly registered within 90 days of original installation, otherwise 5 years (except in California and Quebec and other jurisdictions that prohibit warranty benefits conditioned on registration). See Warranty Conditions below.**

OTHER APPLICATIONS

The warranty period is five (5) years on the compressor, and one (1) year on all other parts. The warranty is the original owner only and is not available for subsequent owners.

Ordering Information

Part Number	Description	Quantity
Outdoor Unit		
27SCA518A003	27SCA Comfort Single Stage Heat Pump with Puron Refrigerant Advanced 1.5 Tons Cooling	1
	15 SEER @ ARI Conditions	
Indoor Coil		
FT5ANXB24L00	Performance Series Fan Coil with Puron Advance 208/230-1-60	1
	Singular, TXV	
	Aluminum	

The Product and Ratings Data in this program is subject to change at any time and without notice. Please refer to the latest product literature and the AHRI directory at www.ahridirectory.org for the most up-to-date information.

Performance Summary For ID 6

Project: Climatec - City of Esc - Public Works Yard 04/12/2025
Prepared By: Shawn Harlan

System Performance

System:	**27SCA/FT5A**	
System Quantity:	**1**	
Altitude:	**0.0**	ft
Linear Pipe Length:	**0.0**	ft
COP @ 47 F:	**3.76**	
COP @ 17 F:	**2.50**	
SEER @ ARI Conditions:	**14.5**	
EER @ ARI Conditions:	**11.7**	
HSPF @ ARI Conditions:	**7.5**	

Actual Clg Airflow:	**600.0**	CFM
Standard Clg Airflow:	**600.0**	CFM
Total Net Clg Capacity:	**17.00**	MBH
Net Sensible Clg Capacity:	**12.95**	MBH
Htg HP Capacity:	**17.30**	MBH
Htg HP Integrated Capacity:	**17.30**	MBH
Heating HP Compressor Power:	**1.39**	kW
Total System Power:	**1.84**	kW

System Parameters

Outdoor Unit Parameters

Unit Model:	**27SCA518A003**	
Unit Size (Nominal):	**1.5 Tons (Size 18)**	
Voltage:	**208/230-1-60**	V-Ph-Hz
Clg Ent Air DB Ambient:	**95.0**	°F
Htg Ent Air DB Ambient:	**47.0**	°F

Indoor Coil Parameters

Unit Model:	**FT5ANXB24L00**	
Unit Size (Nominal):	**24,000 Btuh**	
Voltage:	**208-1-60**	V-Ph-Hz
Ent Air DB:	**80.00**	°F
Ent Air WB:	**67.00**	°F
Ent Enthalpy:	**31.44**	BTU/lb
Lvg Air DB:	**60.02**	°F
Lvg Air WB:	**58.17**	°F
Lvg Enthalpy:	**25.14**	BTU/lb
Htg Ent Air DB:	**70.0**	°F
Htg Lvg Air DB:	**96.7**	°F
Heating Size (Nominal):	**No Heat**	
Total External Static Pressure:	**0.50**	in wg

Electrical Data

Outdoor Electrical Data

Unit Voltage:	**208/230-1-60**	V-Ph-Hz
Fan Motor FLA:	**0.50**	Amps
MCA:	**10.9**	Amps
Max Fuse:	**15**	Amps
Operating Range Min:	**197**	V
Operating Range Max:	**253**	V
Compressor RLA:	**8.3**	Amps
Compressor LRA:	**45.1**	Amps

Indoor Electrical Data:

(For units with no factory installed electric heaters)

Unit Voltage:	**208-1-60**	V-Ph-Hz
Unit FLA:	**4.0**	Amps
Unit MCA:	**5.0**	Amps
Unit MOCP:	**15.0**	Amps
Unit Min Wire Size:	**14.0**	
Unit Fuse/Ckt Bkr Amps:	**15.0**	Amps
Motor HP:	**1/2**	HP

Notice: Indoor Elect. data is for 208-1-60 voltage

The Product and Ratings Data in this program is subject to change at any time and without notice. Please refer to the latest product literature and the AHRI directory at www.ahridirectory.org for the most up-to-date information.

Acoustic Summary For ID 6

Project: Climatec - City of Esc - Public Works Yard 04/12/2025
Prepared By: Shawn Harlan

Outdoor Unit Parameters:

Unit Model: **27SCA**
Unit Size: **1.5 Tons (Size 18)**
Variations: **Standard**

Octave Band Center Frequency, Hz	125	250	500	1k	2k	4k	8k	dBA
Sound Power,dB	63.9	65.8	66.6	68.3	63.3	59.7	54.6	
A-Weighted Sound Power, dBA								72.0

Indoor Coil Parameters:

Unit Model: **FT5A**
Unit Size: **24,000 Btuh**
Cabinet Insulation: **Singular, TXV**

Octave Band Center Frequency, Hz	63	125	250	500	1k	2k	4k
Sound Power,dB	72.0	68.0	64.0	61.0	59.0	57.0	53.0

The Product and Ratings Data in this program is subject to change at any time and without notice. Please refer to the latest product literature and the AHRI directory at www.ahridirectory.org for the most up-to-date information.

Certified Drawing For ID 6

04/12/2025
Prepared By: Shawn Harlan

Project: Climatec - City of Esc - Public Works Yard

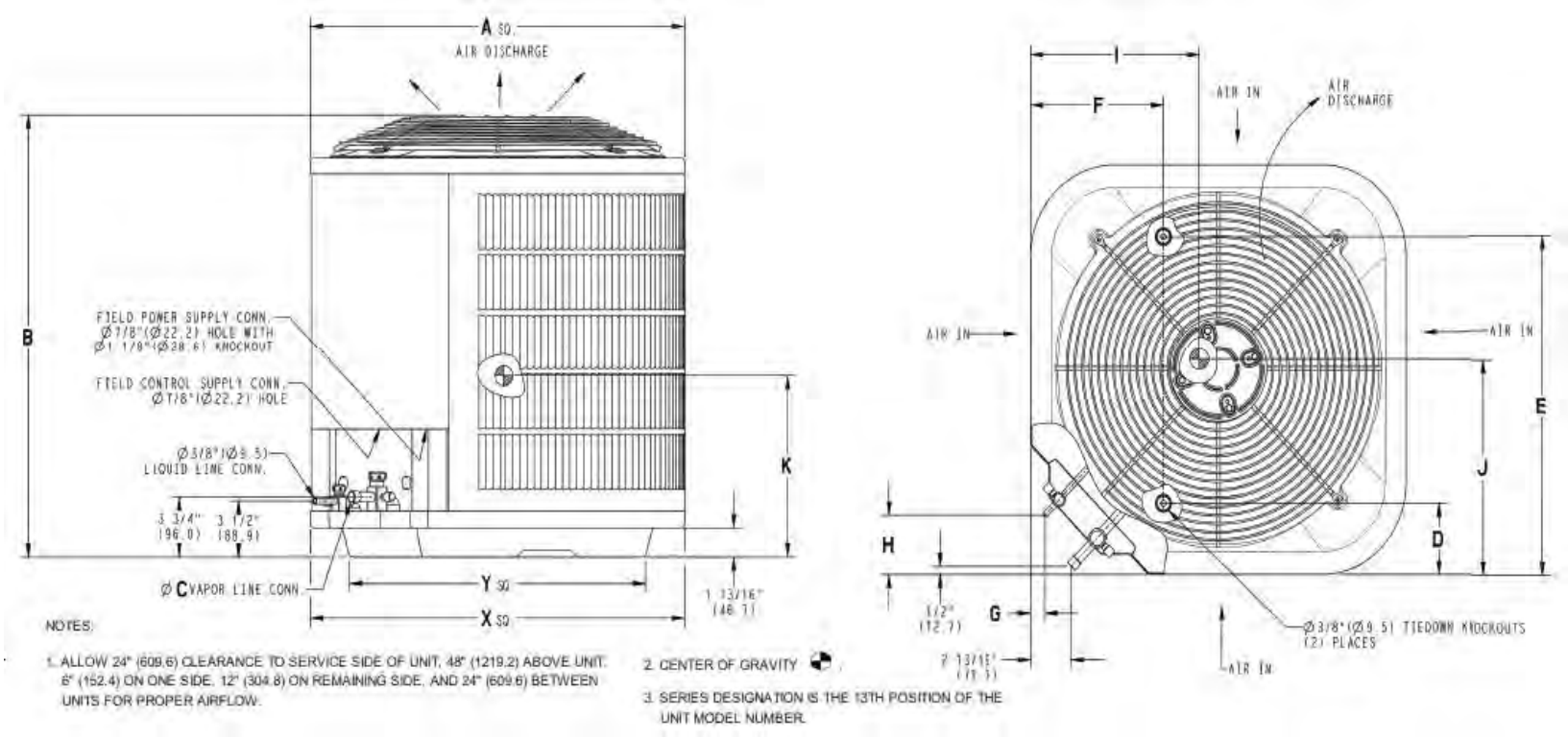

Outdoor Model

Unit Model:	**27SCA**	
Unit Size:	**1.5 Tons (Size 18)**	
Voltage:	**208/230-1-60**	V-Ph-Hz
SEER:	**15**	
PartNumber:	**27SCA518A003**	

Shipping Dimensions and Weights	Outdoor Unit
Height	36.44 in
Width	34.25 in
Length	34.25 in
Operating Weight	149. lb
Shipping Weight	169. lb

Dimensions										
A	B	C	D	E	F	G	H	I	J	K
31.19 in	32.06 in	0.63 in	6.56 in	24.69 in	9.13 in	1.13 in	3.81 in	12.50 in	11.00 in	11.75 in

The Product and Ratings Data in this program is subject to change at any time and without notice. Please refer to the latest product literature and the AHRI directory at www.ahridirectory.org for the most up-to-date information.

Certified Drawing For ID 6

04/12/2025
Prepared By: Shawn Harlan

Project: Climatec - City of Esc - Public Works Yard

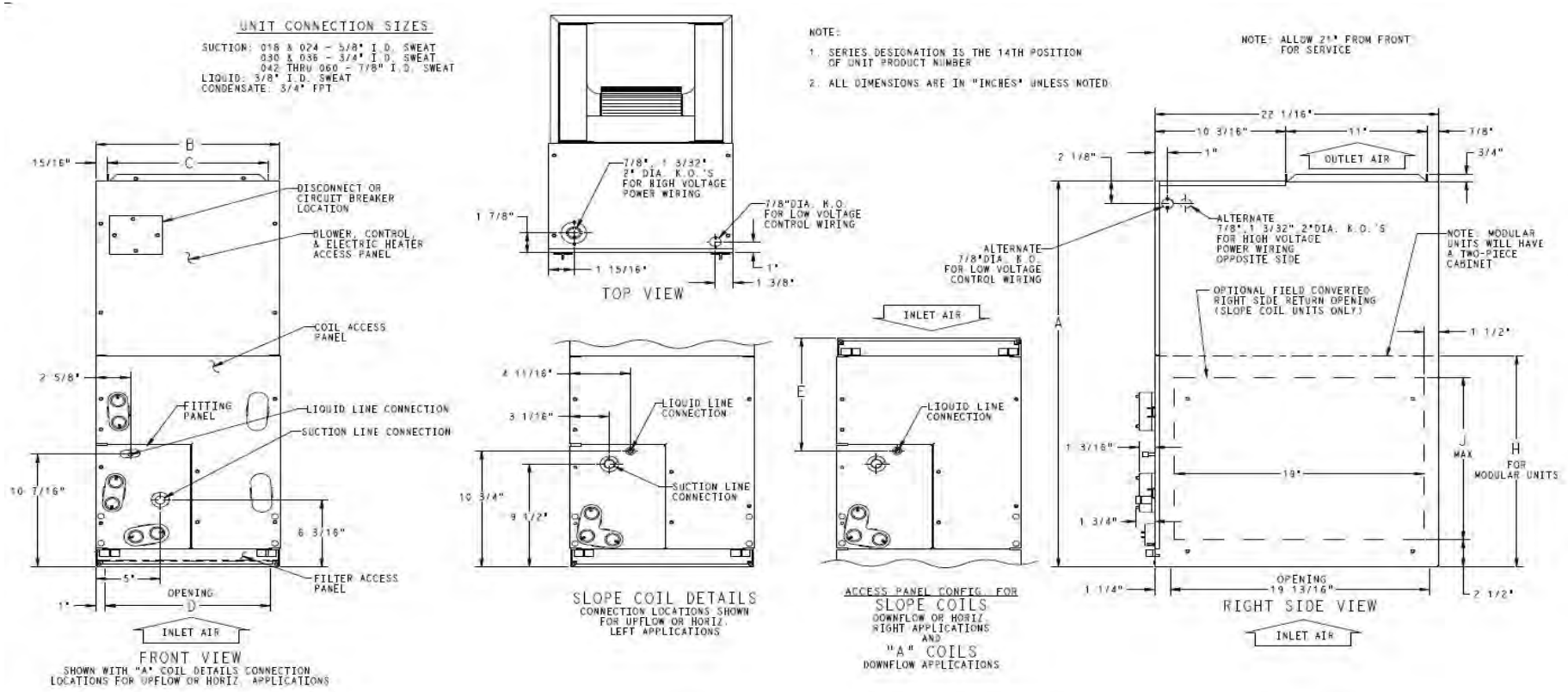

Indoor Coil

Unit Model: **FT5A**
Unit Size: **24,000 Btuh**
Voltage: **208-1-60** V-Ph-Hz
Cabinet Insulation: **Singular, TXV**
PartNumber: **FT5ANXB24L00**

Dimensions and Weights	Indoor Coil
Height	42.69 in
Width	17.63 in
Length	22.06 in
Shipping Weight	124. lb

Dimensions								
A	B	C	D	E	F	G	H	J
42.69 in	17.63 in	15.75 in	15.63 in	10.75 in	18.56 in	18.25 in	--	--

The Product and Ratings Data in this program is subject to change at any time and without notice. Please refer to the latest product literature and the AHRI directory at www.ahridirectory.org for the most up-to-date information.

Certified Drawing For ID 6

04/12/2025
Prepared By: Shawn Harlan

Project: Climatec - City of Esc - Public Works Yard

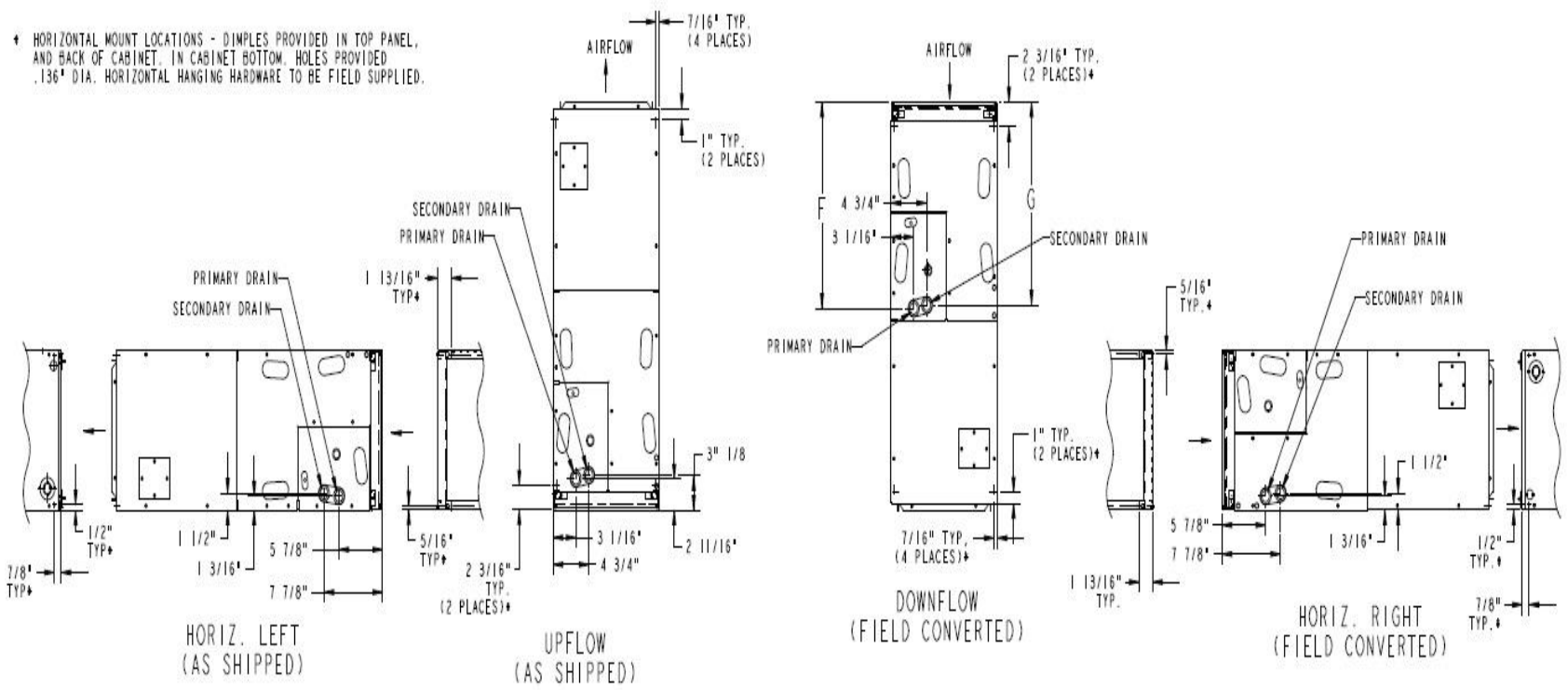

Indoor Coil

Unit Model:	**FT5A**	
Unit Size:	**24,000 Btuh**	
Voltage:	**208-1-60**	V-Ph-Hz
PartNumber:	**FT5ANXB24L00**	

The Product and Ratings Data in this program is subject to change at any time and without notice. Please refer to the latest product literature and the AHRI directory at www.ahridirectory.org for the most up-to-date information.

SUBMITTAL

Project

Climatec - City of Esc - Real Property

Date

Saturday, April 12, 2025

Shawn Harlan
Sigler - Brea
205 Puente Street
Brea CA

Table Of Contents

Project: Climatec - City of Esc - Real Property
Prepared By: Shawn Harlan

04/12/2025
10:53AM

ID 5 **3**
Unit Report 4
Certified Drawing 5
Performance Summary 6
ID 7 **9**
Unit Report 10
Certified Drawing 11
Performance Summary 12
ID 3 **15**
Unit Report 16
Certified Drawing 17
Performance Summary 18
ID 6 **21**
Unit Report 22
Performance Summary 23
System Parameters 23
Electrical Data 23
Acoustic Summary 24
Certified Drawing 25

ID 5

Tag Cover Sheet
Unit Report
Certified Drawing
Performance Report

Unit Report For ID 5

Project: Climatec - City of Esc - Real Property
Prepared By: Shawn Harlan

04/12/2025
10:53AM

Unit Parameters

Unit Model: **50NT-B48---3**
Unit Size: **48 (4 Tons)**
Volts-Phase-Hertz: **208-1-60**
Heating Type: **Heat Pump**
Refrigerant: **R-454B**
Duct Cfg: **Horizontal/Horizontal**

Dimensions (ft. in.) & Weight (lb.) ***

Unit Length: **4' 0.25"**
Unit Width: **3' 8.1875"**
Unit Height: **3' 8.75"**

*** Weights and Dimensions are approximate. Weight does not include roof curbs, unit packaging, field installed accessories or factory installed options. Approximate dimensions are provided primarily for shipping purposes. For exact dimensions and weights, refer to appropriate product data catalog.

Base Unit Weight (Does not include any accessories):
412 lb

Warranty Information

1 year warranty on parts
5 yearwarranty on compressor

No optional warranties were selected.

NOTE: Please see Warranty Catalog 500-089 for explanation of policies and ordering methods.

Ordering Information

Part Number	Description	Quantity
50NT-B48---3	Rooftop Unit	1

Certified Drawing for ID 5

Project: Climatec - City of Esc - Real Property
Prepared By: Shawn Harlan

04/12/2025
10:53AM

CARRIER / BRYANT HP (LARGE CHASSIS)

COOLING CAPACITY	UNIT WT.		UNIT HEIGHT IN/MM		CENTER OF GRAVITY IN/MM					
	LB	KG	"A"		X		Y		Z	
36	409	184.2	54-3/4	1391	20-1/2	521	17-1/2	445	17-3/8	441
42	430	193.3	54-3/4	1391	20-1/2	521	17-1/2	445	17-3/8	448
48	412	193.3	44-3/4	1137	20-1/2	521	17-1/2	445	17-3/8	448
60	461	225.0	48-3/4	1238	20-1/2	521	17-1/2	445	18	457

UNIT	CORNER WEIGHT LB/KG							
	"1"		"2"		"3"		"4"	
36	89.2	40.5	79.0	35.8	79.0	51.5	113.4	57.8
42	93.8	42.6	83.2	37.7	83.2	54.2	119.4	60.6
48	89.6	40.6	79.8	36.2	79.8	51.7	114.0	58.4
60	99.9	45.3	88.8	40.3	88.8	58.1	128.1	65.5

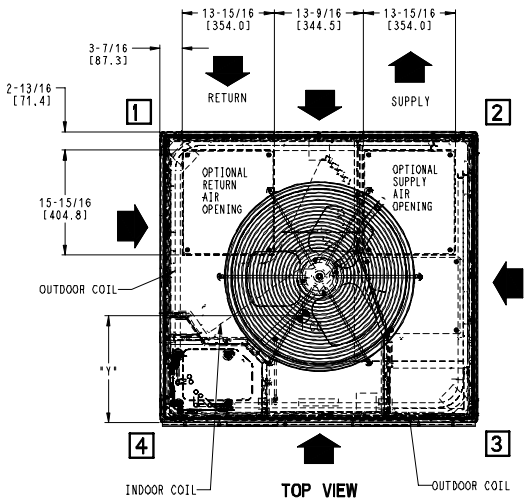

REQUIRED CLEARANCES TO COMBUSTIBLE MATL.

	INCHES [MM]
TOP OF UNIT	14 [355.6]
DUCT SIDE OF UNIT	2 [50.8]
SIDE OPPOSITE DUCTS	14 [355.6]
BOTTOM OF UNIT	0 [0.0]
ELECTRICAL PANEL	36 [914.4]

NEC. REQUIRED CLEARANCES.

	INCHES [MM]
BETWEEN UNITS, POWER ENTRY SIDE	42 [1066.8]
UNIT AND UNGROUNDED SURFACES, POWER ENTRY SIDE	36 [914.0]
UNIT AND BLOCK OR CONCRETE WALLS AND OTHER GROUNDED SURFACES, POWER ENTRY SIDE	42 [1066.8]

REQUIRED CLEARANCE FOR OPERATION AND SERVICING

	INCHES [MM]
EVAP. COIL ACCESS SIDE	36 [914.0]
POWER ENTRY SIDE	42 [1066.8]
(EXCEPT FOR NEC REQUIREMENTS)	
UNIT TOP	48 [1219.2]
SIDE OPPOSITE DUCTS	36 [914.0]
DUCT PANEL	12 [304.8]*

*MINIMUM DISTANCES: IF UNIT IS PLACED LESS THAN 12 [304.8] FROM WALL SYSTEM, THEN SYSTEM PERFORMANCE MAYBE COMPROMISED.

DIMENSIONS IN [ ] ARE IN MILLIMETERS

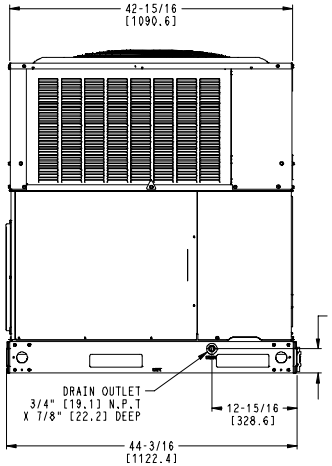

LEFT SIDE VIEW

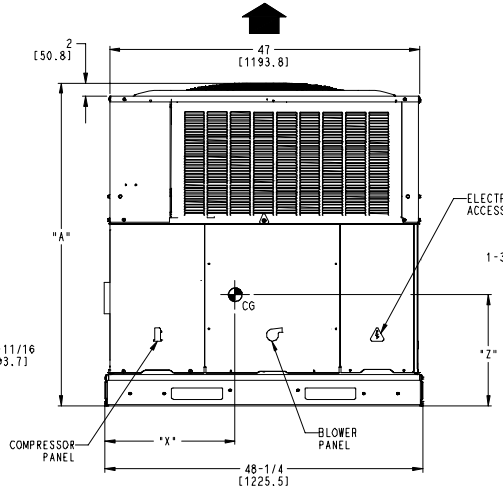

FRONT VIEW

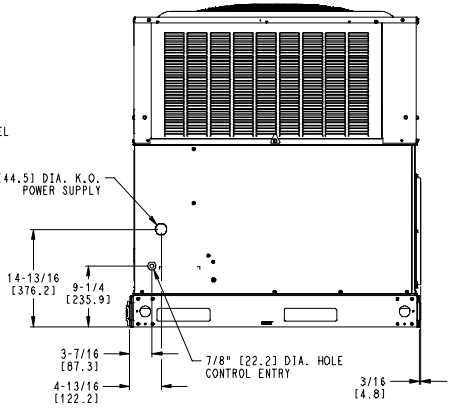

RIGHT SIDE VIEW

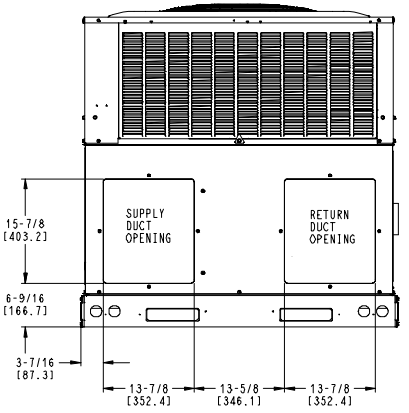

REAR VIEW

U.S. EXPORT CLASSIFICATION: NOT SUBJECT TO REGULATION (N.S.R)

12/20/23	ORIG. DRW	SINGLE ZONE ELECTRIC COOLING & HEAT(LG)	SD5986-4	-

Performance Summary For ID 5

Project: Climatec - City of Esc - Real Property 04/12/2025
Prepared By: Shawn Harlan 10:53AM

Part Number:50NT-B48---3

Refrigerant:	**R-454B**	
ARI SEER2:	**13.40**	
Application EER (Rooftop Unit only):	**0.00**	

Base Unit Dimensions

Unit Length:	**48.3**	in
Unit Width:	**44.2**	in
Unit Height:	**44.8**	in
Base Unit Weight (Does not include any accessories):	**412**	lb

Unit

Unit Voltage-Phase-Hertz:	**208-1-60**	
Air Discharge:	**Horizontal**	
Fan Drive Type:	**Direct**	
Actual Airflow:	**1591**	CFM
Site Altitude:	**0**	ft

Cooling Performance

Condenser Entering Air DB:	**95.0**	F
Evaporator Entering Air DB:	**80.0**	F
Evaporator Entering Air WB:	**67.0**	F
Entering Air Enthalpy:	**31.44**	BTU/lb
Evaporator Leaving Air DB:	**59.0**	F
Evaporator Leaving Air WB:	**57.5**	F
Evaporator Leaving Air Enthalpy:	**24.73**	BTU/lb
Unit Discharge Air DB:	**0.0**	F
Unit Discharge Air WB:	**0.0**	F
Unit Discharge Air Enthalpy:	**0.00**	BTU/lb
Net Cooling Capacity:	**47.98**	MBH
Net Sensible Capacity:	**36.13**	MBH
Total Unit Power Input:	**4.10**	kW
Coil Bypass Factor:	**0.000**	

Heating Performance

Outdoor Ambient Temperature:	**47.0**	F
Entering Air Indoor Coil DB:	**70.0**	F
Leaving Air Indoor Coil DB:	**94.9**	F
Total Heating Capacity:	**42.84**	MBH
Integrated Heating Capacity:	**42.84**	MBH
Heating Power Input:	**3.51**	kW
High Temperature COP:	**3.70**	
Low Temperature COP:	**2.26**	
HSPF2:	**6.7**	

Supply Fan

External Static Pressure:	**0.50**	in wg
Options / Accessories Static Pressure		
Wet Coil:	**0.10**	in wg
Application External Static (ESP + Unit Opts/Acc.):	**0.60**	in wg
Fan Power:	**0.57**	BHP
Fan Motor Size, hp:	**1**	
NOTE:	**Medium Motor Speed, Horz**	

Selection includes construction throwaway filter into the base fan curve. This filter is not MERV Rated.

Electrical Data

Minimum Voltage:	**197**
Maximum Voltage:	**253**

Performance Summary For ID 5

Project: Climatec - City of Esc - Real Property
Prepared By: Shawn Harlan

04/12/2025
10:53AM

Compressor RLA: **19.4**
Compressor LRA: **102**
Outdoor Fan FLA (ea): **1.2**
Indoor Fan Motor FLA (Total): **6.9**
Power Supply MCA: **32.4**
Power Supply MOCP (Fuse or HACR): **50**

Control Panel SCCR: 5kA RMS at Rated Symmetrical Voltage

Acoustics

Sound Rating: **74.0** db
Sound Power Levels, db re 10E-12 Watts

	Discharge	Inlet	Outdoor
63 Hz	NA	NA	NA
125 Hz	NA	NA	56.9
250 Hz	NA	NA	59.3
500 Hz	NA	NA	63.9
1000 Hz	NA	NA	64.5
2000 Hz	NA	NA	61.7
4000 Hz	NA	NA	55.4
8000 Hz	NA	NA	47.4

Advanced Acoustics

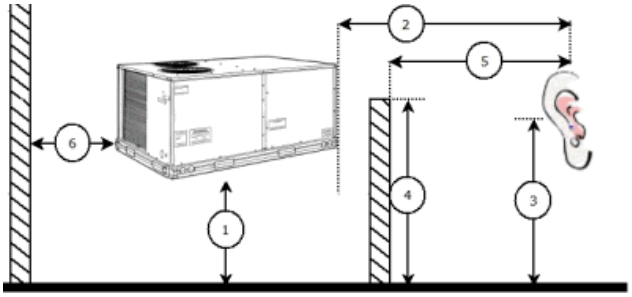

Advanced Accoustics Parameters

1. Unit height above ground: **30.0** ft
2. Horizontal distance from unit to receiver: **50.0** ft
3. Receiver height above ground: **5.7** ft
4. Height of obstruction: **0.0** ft
5. Horizontal distance from obstruction to receiver: **0.0** ft
6. Horizontal distance from unit to obstruction: **0.0** ft

Detailed Acoustics Information

Octave Band Center Freq. Hz	63	125	250	500	1k	2k	4k	8k	Overall
A	0.0	56.9	59.3	63.9	64.5	61.7	55.4	47.4	69.3 Lw
B	-26.2	40.8	50.7	60.7	64.5	62.9	56.4	46.3	68.2 LwA
C	0.0	24.5	26.9	31.5	32.1	29.3	23.0	15.0	36.9 Lp
D	-26.2	8.4	18.3	28.3	32.1	30.5	24.0	13.9	35.8 LpA

Legend

Performance Summary For ID 5

Project: Climatec - City of Esc - Real Property 04/12/2025
Prepared By: Shawn Harlan 10:53AM

A Sound Power Levels at Unit's Acoustic Center, Lw
B A-Weighted Sound Power Levels at Unit's Acoustic Center, LwA
C Sound Pressure Levels at Specific Distance from Unit, Lp
D A-Weighted Sound Pressure Levels at Specific Distance from Unit, LpA

Calculation methods used in this program are patterned after the ASHRAE Guide; other ASHRAE Publications and the AHRI Acoustical Standards. While a very significant effort has been made to insure the technical accuracy of this program, it is assumed that the user is knowledgeable in the art of system sound estimation and is aware of the tolerances involved in real world acoustical estimation. This program makes certain assumptions as to the dominant sound sources and sound paths which may not always be appropriate to the real system being estimated. Because of this, no assurances can be offered that this software will always generate an accurate sound prediction from user supplied input data. If in doubt about the estimation of expected sound levels in a space, an Acoustical Engineer or a person with sound prediction expertise should be consulted.

ID 7

Tag Cover Sheet
Unit Report
Certified Drawing
Performance Report

Unit Report For ID 7

Project: Climatec - City of Esc - Real Property
Prepared By: Shawn Harlan

04/12/2025
10:53AM

Unit Parameters

Unit Model: **50NT-B30---3**
Unit Size: **30 (2-1/2 Tons)**
Volts-Phase-Hertz: **208-1-60**
Heating Type: **Heat Pump**
Refrigerant: **R-454B**
Duct Cfg: **Horizontal/Horizontal**

Dimensions (ft. in.) & Weight (lb.) ***

Unit Length: **4' 0.1875"**
Unit Width: **2' 8.625"**
Unit Height: **4' 3.75"**

*** Weights and Dimensions are approximate. Weight does not include roof curbs, unit packaging, field installed accessories or factory installed options. Approximate dimensions are provided primarily for shipping purposes. For exact dimensions and weights, refer to appropriate product data catalog.

Base Unit Weight (Does not include any accessories):
373 lb

Warranty Information

1 year warranty on parts
5 yearwarranty on compressor

No optional warranties were selected.

NOTE: Please see Warranty Catalog 500-089 for explanation of policies and ordering methods.

Ordering Information

Part Number	Description	Quantity
50NT-B30---3	Rooftop Unit	1

CARRIER / BRYANT HP (SMALL CHASSIS)

COOLING CAPACITY	UNIT WT.		UNIT HEIGHT IN/MM		CENTER OF GRAVITY IN/MM					
	LB	KG	"A"		X		Y		Z	
24	338	153.3	51-3/4	1315	20-1/2	520.7	15-1/2	394	16-5/8	422.3
30	373	169.2	51-3/4	1315	20-1/2	520.7	15-1/2	394	16-5/8	422.3

UNIT	CORNER WEIGHT LB/KG							
	"1"		"2"		"3"		"4"	
24	86.3	39.2	76.2	34.6	82.7	37.5	92.8	42.1
30	95.3	43.2	83.9	38.1	91.2	41.4	102.6	46.5

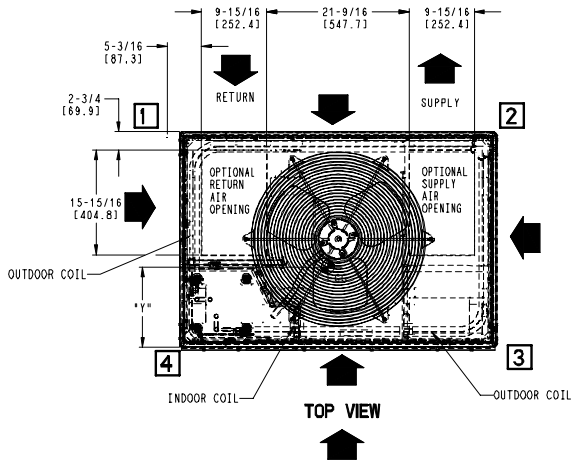

TOP VIEW

REQUIRED CLEARANCES TO COMBUSTIBLE MATL.

	INCHES [MM]
TOP OF UNIT	14 [355.6]
DUCT SIDE OF UNIT	2 [50.8]
SIDE OPPOSITE DUCTS	14 [355.6]
BOTTOM OF UNIT	0 [0.0]
ELECTRICAL PANEL	36 [914.4]

NEC. REQUIRED CLEARANCES.

	INCHES [MM]
BETWEEN UNITS, POWER ENTRY SIDE	42 [1066.8]
UNIT AND UNGROUNDED SURFACES, POWER ENTRY SIDE	36 [914.0]
UNIT AND BLOCK OR CONCRETE WALLS AND OTHER GROUNDED SURFACES, POWER ENTRY SIDE	42 [1066.8]

REQUIRED CLEARANCE FOR OPERATION AND SERVICING

	INCHES [MM]
EVAP. COIL ACCESS SIDE	36 [914.0]
POWER ENTRY SIDE	42 [1066.8]
(EXCEPT FOR NEC REQUIREMENTS)	
UNIT TOP	48 [1219.2]
SIDE OPPOSITE DUCTS	36 [914.0]
DUCT PANEL	12 [304.8]*

*MINIMUM DISTANCES: IF UNIT IS PLACED LESS THAN 12 [304.8] FROM WALL SYSTEM, THEN SYSTEM PERFORMANCE MAYBE COMPROMISED.

DIMENSIONS IN [] ARE IN MILLIMETERS

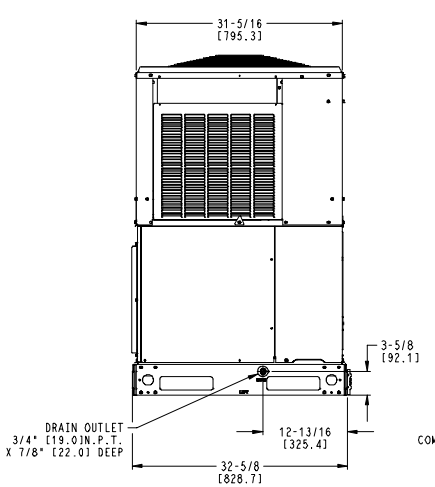

LEFT SIDE VIEW

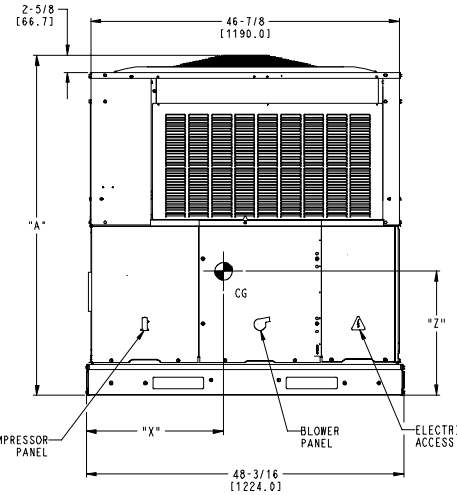

FRONT VIEW

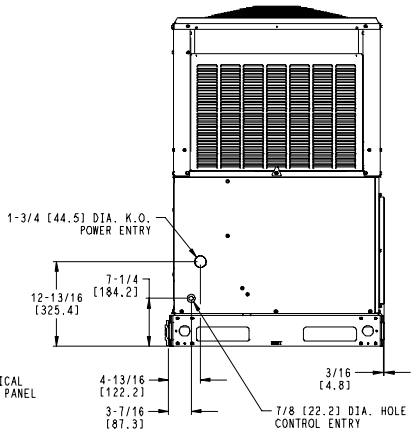

RIGHT SIDE VIEW

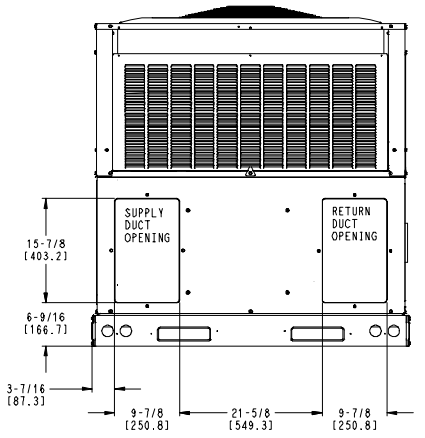

REAR VIEW

U.S. EXPORT CLASSIFICATION: NOT SUBJECT TO REGULATION (N.S.R)

12/05/23	UPDATED REAR VIEW	SINGLE ZONE ELECTRIC COOLING & HEAT(SM)	SD5986-4	-

Performance Summary For ID 7

Project: Climatec - City of Esc - Real Property 04/12/2025
Prepared By: Shawn Harlan 10:53AM

Part Number:50NT-B30---3

Refrigerant:	**R-454B**	
ARI SEER2:	**13.40**	
Application EER (Rooftop Unit only):	**0.00**	

Base Unit Dimensions

Unit Length:	**48.2**	in
Unit Width:	**32.6**	in
Unit Height:	**51.8**	in
Base Unit Weight (Does not include any accessories):	**373**	lb

Unit

Unit Voltage-Phase-Hertz:	**208-1-60**	
Air Discharge:	**Horizontal**	
Fan Drive Type:	**Direct**	
Actual Airflow:	**959**	CFM
Site Altitude:	**0**	ft

Cooling Performance

Condenser Entering Air DB:	**95.0**	F
Evaporator Entering Air DB:	**80.0**	F
Evaporator Entering Air WB:	**67.0**	F
Entering Air Enthalpy:	**31.44**	BTU/lb
Evaporator Leaving Air DB:	**59.4**	F
Evaporator Leaving Air WB:	**57.6**	F
Evaporator Leaving Air Enthalpy:	**24.78**	BTU/lb
Unit Discharge Air DB:	**0.0**	F
Unit Discharge Air WB:	**0.0**	F
Unit Discharge Air Enthalpy:	**0.00**	BTU/lb
Net Cooling Capacity:	**28.73**	MBH
Net Sensible Capacity:	**21.33**	MBH
Total Unit Power Input:	**2.30**	kW
Coil Bypass Factor:	**0.000**	

Heating Performance

Outdoor Ambient Temperature:	**47.0**	F
Entering Air Indoor Coil DB:	**70.0**	F
Leaving Air Indoor Coil DB:	**96.3**	F
Total Heating Capacity:	**27.26**	MBH
Integrated Heating Capacity:	**27.26**	MBH
Heating Power Input:	**2.54**	kW
High Temperature COP:	**3.00**	
Low Temperature COP:	**2.10**	
HSPF2:	**6.7**	

Supply Fan

External Static Pressure:	**0.50**	in wg
Options / Accessories Static Pressure		
Wet Coil:	**0.05**	in wg
Application External Static (ESP + Unit Opts/Acc.):	**0.55**	in wg
Fan Power:	**0.38**	BHP
Fan Motor Size, hp:	**1/2**	
NOTE:	**Med-High Motor Speed, Horz**	

Selection includes construction throwaway filter into the base fan curve. This filter is not MERV Rated.

Electrical Data

Minimum Voltage:	**197**
Maximum Voltage:	**253**

Performance Summary For ID 7

Project: Climatec - City of Esc - Real Property 04/12/2025
Prepared By: Shawn Harlan 10:53AM

Compressor RLA: **13.9**
Compressor LRA: **67**
Outdoor Fan FLA (ea): **1.05**
Indoor Fan Motor FLA (Total): **3.9**
Power Supply MCA: **22.4**
Power Supply MOCP (Fuse or HACR): **35**

Control Panel SCCR: 5kA RMS at Rated Symmetrical Voltage

Acoustics

Sound Rating: **73.1** db
Sound Power Levels, db re 10E-12 Watts

	Discharge	Inlet	Outdoor
63 Hz	NA	NA	NA
125 Hz	NA	NA	55.9
250 Hz	NA	NA	57.0
500 Hz	NA	NA	63.1
1000 Hz	NA	NA	63.7
2000 Hz	NA	NA	59.7
4000 Hz	NA	NA	54.2
8000 Hz	NA	NA	48.8

Advanced Acoustics

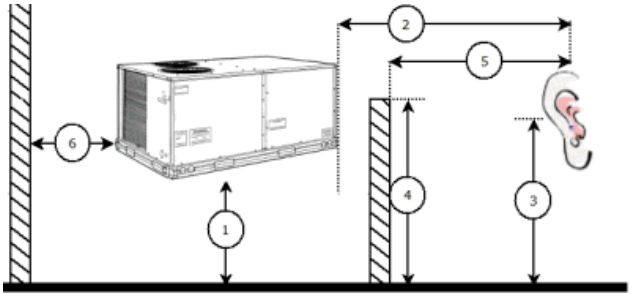

Advanced Accoustics Parameters

1. Unit height above ground: **30.0** ft
2. Horizontal distance from unit to receiver: **50.0** ft
3. Receiver height above ground: **5.7** ft
4. Height of obstruction: **0.0** ft
5. Horizontal distance from obstruction to receiver: **0.0** ft
6. Horizontal distance from unit to obstruction: **0.0** ft

Detailed Acoustics Information

Octave Band Center Freq. Hz	63	125	250	500	1k	2k	4k	8k	Overall
A	0.0	55.9	57.0	63.1	63.7	59.7	54.2	48.8	68.2 Lw
B	-26.2	39.8	48.4	59.9	63.7	60.9	55.2	47.7	67.0 LwA
C	0.0	23.5	24.6	30.7	31.3	27.3	21.8	16.4	35.8 Lp
D	-26.2	7.4	16.0	27.5	31.3	28.5	22.8	15.3	34.6 LpA

Legend

Performance Summary For ID 7

Project: Climatec - City of Esc - Real Property 04/12/2025
Prepared By: Shawn Harlan 10:53AM

A Sound Power Levels at Unit's Acoustic Center, Lw
B A-Weighted Sound Power Levels at Unit's Acoustic Center, LwA
C Sound Pressure Levels at Specific Distance from Unit, Lp
D A-Weighted Sound Pressure Levels at Specific Distance from Unit, LpA

Calculation methods used in this program are patterned after the ASHRAE Guide; other ASHRAE Publications and the AHRI Acoustical Standards. While a very significant effort has been made to insure the technical accuracy of this program, it is assumed that the user is knowledgeable in the art of system sound estimation and is aware of the tolerances involved in real world acoustical estimation. This program makes certain assumptions as to the dominant sound sources and sound paths which may not always be appropriate to the real system being estimated. Because of this, no assurances can be offered that this software will always generate an accurate sound prediction from user supplied input data. If in doubt about the estimation of expected sound levels in a space, an Acoustical Engineer or a person with sound prediction expertise should be consulted.

ID 3

Tag Cover Sheet
Unit Report
Certified Drawing
Performance Report

Unit Report For ID 3

Project: Climatec - City of Esc - Real Property
Prepared By: Shawn Harlan

04/12/2025
10:53AM

Unit Parameters

Unit Model: **50NT-B24---3**
Unit Size: **24 (2 Tons)**
Volts-Phase-Hertz: **208-1-60**
Heating Type: **Heat Pump**
Refrigerant: **R-454B**
Duct Cfg: **Vertical/Vertical**

Dimensions (ft. in.) & Weight (lb.) ***

Unit Length: **4' 0.1875"**
Unit Width: **2' 8.625"**
Unit Height: **4' 3.75"**

*** Weights and Dimensions are approximate. Weight does not include roof curbs, unit packaging, field installed accessories or factory installed options. Approximate dimensions are provided primarily for shipping purposes. For exact dimensions and weights, refer to appropriate product data catalog.

Base Unit Weight (Does not include any accessories):
338 lb

Warranty Information

1 year warranty on parts
5 yearwarranty on compressor

No optional warranties were selected.

NOTE: Please see Warranty Catalog 500-089 for explanation of policies and ordering methods.

Ordering Information

Part Number	Description	Quantity
50NT-B24---3	Rooftop Unit	1

CARRIER / BRYANT HP (SMALL CHASSIS)

COOLING CAPACITY	UNIT WT.		UNIT HEIGHT IN/MM		CENTER OF GRAVITY IN/MM					
	LB	KG	"A"		X		Y		Z	
24	338	153.3	51-3/4	1315	20-1/2	520.7	15-1/2	394	16-5/8	422.3
30	373	169.2	51-3/4	1315	20-1/2	520.7	15-1/2	394	16-5/8	422.3

UNIT	CORNER WEIGHT LB/KG							
	"1"		"2"		"3"		"4"	
24	86.3	39.2	76.2	34.6	82.7	37.5	92.8	42.1
30	95.3	43.2	83.9	38.1	91.2	41.4	102.6	46.5

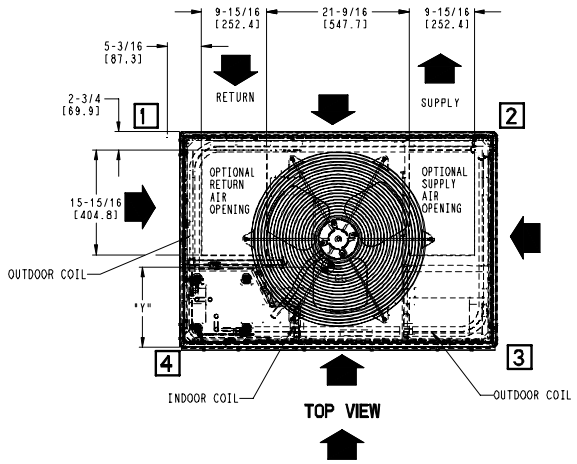

TOP VIEW

REQUIRED CLEARANCES TO COMBUSTIBLE MATL.

	INCHES [MM]
TOP OF UNIT	14 [355.6]
DUCT SIDE OF UNIT	2 [50.8]
SIDE OPPOSITE DUCTS	14 [355.6]
BOTTOM OF UNIT	0 [0.0]
ELECTRICAL PANEL	36 [914.4]

NEC. REQUIRED CLEARANCES.

	INCHES [MM]
BETWEEN UNITS, POWER ENTRY SIDE	42 [1066.8]
UNIT AND UNGROUNDED SURFACES, POWER ENTRY SIDE	36 [914.0]
UNIT AND BLOCK OR CONCRETE WALLS AND OTHER GROUNDED SURFACES, POWER ENTRY SIDE	42 [1066.8]

REQUIRED CLEARANCE FOR OPERATION AND SERVICING

	INCHES [MM]
EVAP. COIL ACCESS SIDE	36 [914.0]
POWER ENTRY SIDE	42 [1066.8]
(EXCEPT FOR NEC REQUIREMENTS)	
UNIT TOP	48 [1219.2]
SIDE OPPOSITE DUCTS	36 [914.0]
DUCT PANEL	12 [304.8]*

*MINIMUM DISTANCES: IF UNIT IS PLACED LESS THAN 12 [304.8] FROM WALL SYSTEM, THEN SYSTEM PERFORMANCE MAYBE COMPROMISED.

DIMENSIONS IN [] ARE IN MILLIMETERS

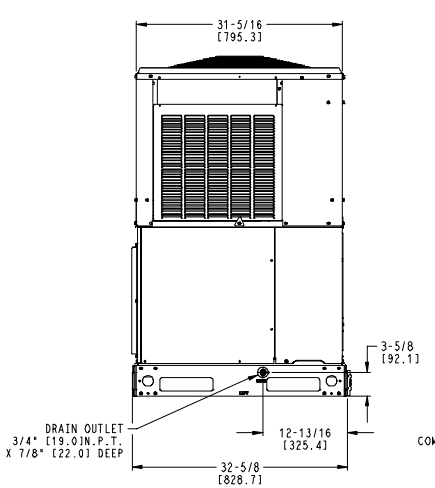

LEFT SIDE VIEW

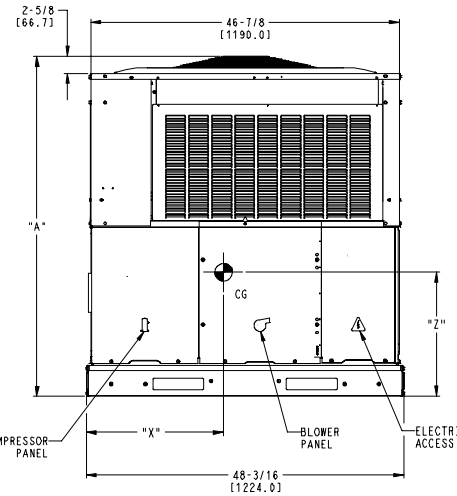

FRONT VIEW

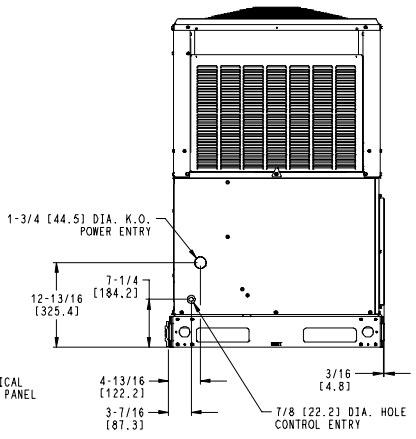

RIGHT SIDE VIEW

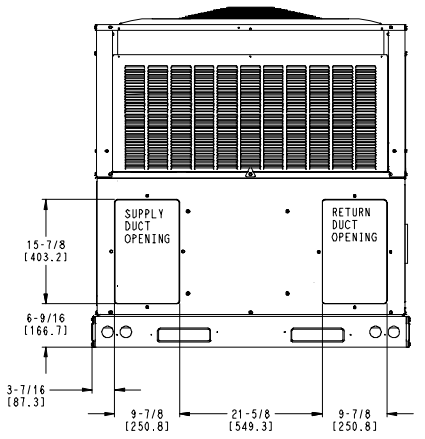

REAR VIEW

U.S. EXPORT CLASSIFICATION: NOT SUBJECT TO REGULATION (N.S.R)

12/05/23	UPDATED REAR VIEW	SINGLE ZONE ELECTRIC COOLING & HEAT(SM)	SD5986-4	-

Performance Summary For ID 3

Project: Climatec - City of Esc - Real Property 04/12/2025
Prepared By: Shawn Harlan 10:53AM

Part Number:50NT-B24---3

Refrigerant:	**R-454B**	
ARI SEER2:	**13.40**	
Application EER (Rooftop Unit only):	**0.00**	

Base Unit Dimensions

Unit Length:	**48.2**	in
Unit Width:	**32.6**	in
Unit Height:	**51.8**	in
Base Unit Weight (Does not include any accessories):	**338**	lb

Unit

Unit Voltage-Phase-Hertz:	**208-1-60**	
Air Discharge:	**Vertical**	
Fan Drive Type:	**Direct**	
Actual Airflow:	**828**	CFM
Site Altitude:	**0**	ft

Cooling Performance

Condenser Entering Air DB:	**95.0**	F
Evaporator Entering Air DB:	**80.0**	F
Evaporator Entering Air WB:	**67.0**	F
Entering Air Enthalpy:	**31.44**	BTU/lb
Evaporator Leaving Air DB:	**59.8**	F
Evaporator Leaving Air WB:	**58.3**	F
Evaporator Leaving Air Enthalpy:	**25.21**	BTU/lb
Unit Discharge Air DB:	**0.0**	F
Unit Discharge Air WB:	**0.0**	F
Unit Discharge Air Enthalpy:	**0.00**	BTU/lb
Net Cooling Capacity:	**23.20**	MBH
Net Sensible Capacity:	**18.05**	MBH
Total Unit Power Input:	**1.95**	kW
Coil Bypass Factor:	**0.000**	

Heating Performance

Outdoor Ambient Temperature:	**47.0**	F
Entering Air Indoor Coil DB:	**70.0**	F
Leaving Air Indoor Coil DB:	**96.3**	F
Total Heating Capacity:	**23.50**	MBH
Integrated Heating Capacity:	**23.50**	MBH
Heating Power Input:	**1.88**	kW
High Temperature COP:	**3.80**	
Low Temperature COP:	**2.20**	
HSPF2:	**6.7**	

Supply Fan

External Static Pressure:	**0.50**	in wg
Options / Accessories Static Pressure		
Wet Coil:	**0.04**	in wg
Application External Static (ESP + Unit Opts/Acc.):	**0.54**	in wg
Fan Power:	**0.22**	BHP
Fan Motor Size, hp:	**1/2**	
NOTE:	**Medium Motor Speed, Vert**	

Selection includes construction throwaway filter into the base fan curve. This filter is not MERV Rated.

Electrical Data

Minimum Voltage:	**197**
Maximum Voltage:	**253**

Performance Summary For ID 3

Project: Climatec - City of Esc - Real Property
Prepared By: Shawn Harlan

04/12/2025
10:53AM

Compressor RLA: **11.8**
Compressor LRA: **63**
Outdoor Fan FLA (ea): **0.71**
Indoor Fan Motor FLA (Total): **3.9**
Power Supply MCA: **18.9**
Power Supply MOCP (Fuse or HACR): **30**

Control Panel SCCR: 5kA RMS at Rated Symmetrical Voltage

Acoustics

Sound Rating: **69.9** db
Sound Power Levels, db re 10E-12 Watts

	Discharge	Inlet	Outdoor
63 Hz	NA	NA	NA
125 Hz	NA	NA	59.0
250 Hz	NA	NA	56.6
500 Hz	NA	NA	57.9
1000 Hz	NA	NA	60.9
2000 Hz	NA	NA	55.3
4000 Hz	NA	NA	51.7
8000 Hz	NA	NA	44.0

Advanced Acoustics

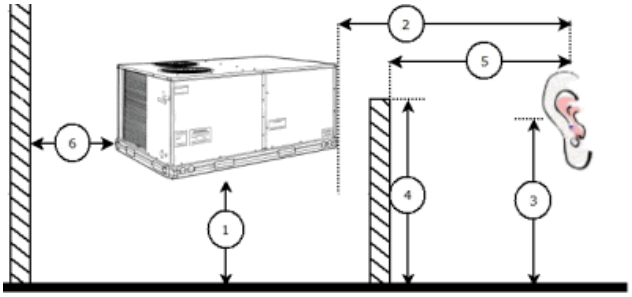

Advanced Accoustics Parameters

1. Unit height above ground: **30.0** ft
2. Horizontal distance from unit to receiver: **50.0** ft
3. Receiver height above ground: **5.7** ft
4. Height of obstruction: **0.0** ft
5. Horizontal distance from obstruction to receiver: **0.0** ft
6. Horizontal distance from unit to obstruction: **0.0** ft

Detailed Acoustics Information

Octave Band Center Freq. Hz	63	125	250	500	1k	2k	4k	8k	Overall
A	0.0	59.0	56.6	57.9	60.9	55.3	51.7	44.0	65.6 Lw
B	-26.2	42.9	48.0	54.7	60.9	56.5	52.7	42.9	63.5 LwA
C	0.0	26.6	24.2	25.5	28.5	22.9	19.3	11.6	33.2 Lp
D	-26.2	10.5	15.6	22.3	28.5	24.1	20.3	10.5	31.1 LpA

Legend

Performance Summary For ID 3

Project: Climatec - City of Esc - Real Property 04/12/2025
Prepared By: Shawn Harlan 10:53AM

A Sound Power Levels at Unit's Acoustic Center, Lw
B A-Weighted Sound Power Levels at Unit's Acoustic Center, LwA
C Sound Pressure Levels at Specific Distance from Unit, Lp
D A-Weighted Sound Pressure Levels at Specific Distance from Unit, LpA

Calculation methods used in this program are patterned after the ASHRAE Guide; other ASHRAE Publications and the AHRI Acoustical Standards. While a very significant effort has been made to insure the technical accuracy of this program, it is assumed that the user is knowledgeable in the art of system sound estimation and is aware of the tolerances involved in real world acoustical estimation. This program makes certain assumptions as to the dominant sound sources and sound paths which may not always be appropriate to the real system being estimated. Because of this, no assurances can be offered that this software will always generate an accurate sound prediction from user supplied input data. If in doubt about the estimation of expected sound levels in a space, an Acoustical Engineer or a person with sound prediction expertise should be consulted.

ID 6

Submittal Cover Sheet
Unit Report
Performance Summary Report
Acoustic Summary
Certified Drawings

Unit Report For ID 6

Project: Climatec - City of Esc - Real Property 04/12/2025
Prepared By: Shawn Harlan

Outdoor Unit Parameters

Unit Model:	**27SCA**	
Unit Size:	**3 Tons (Size 36)**	
Voltage:	**208/230-1-60**	V-Ph-Hz

Indoor Coil Parameters

Unit Model:	**FT5A**	
Unit Size:	**36,000 Btuh**	
Cabinet Insulation:	**Singular, TXV**	
Voltage:	**208-1-60**	V-Ph-Hz
Refrigerant Type:	**Puron Advance**	
Heating Size:	**No Heat**	

Outdoor Unit Dimensions and Weight

Unit Length:	**31.1875**	in
Unit Width:	**31.1875**	in
Unit Height:	**32.0625**	in
Unit Shipping Weight:	**193.**	lb

Indoor Coil Dimensions and Weight

Unit Length:	**22.06**	in
Unit Width:	**21.1**	in
Unit Height:	**53.44**	in
Unit Shipping Weight:	**146.**	lb

RESIDENTIAL APPLICATIONS
This warranty is to the original purchasing owner and subsequent owners only to the extent and as stated in the Warranty Conditions and below. The limited warranty period in years, depending on the part and the claimant, is as shown in the table below.

Limited Warranty (Years)		
Item	**Original Owner**	**Subsequent Owner**
Parts	10* (or 5)	5
Compressor	10* (or 5)	5

***If properly registered within 90 days of original installation, otherwise 5 years (except in California and Quebec and other jurisdictions that prohibit warranty benefits conditioned on registration). See Warranty Conditions below.**

OTHER APPLICATIONS
The warranty period is five (5) years on the compressor, and one (1) year on all other parts. The warranty is the original owner only and is not available for subsequent owners.

Ordering Information

Part Number	Description	Quantity
Outdoor Unit		
27SCA536A003	27SCA Comfort Single Stage Heat Pump with Puron Refrigerant Advanced 3 Tons Cooling	1
	15 SEER @ ARI Conditions	
Indoor Coil		
FT5ANXC36L00	Performance Series Fan Coil with Puron Advance 208/230-1-60	1
	Singular, TXV	
	Aluminum	

The Product and Ratings Data in this program is subject to change at any time and without notice. Please refer to the latest product literature and the AHRI directory at www.ahridirectory.org for the most up-to-date information.

Performance Summary For ID 6

Project: Climatec - City of Esc - Real Property 04/12/2025
Prepared By: Shawn Harlan

System Performance

System:	**27SCA/FT5A**	
System Quantity:	**1**	
Altitude:	**0.0**	ft
Linear Pipe Length:	**0.0**	ft
COP @ 47 F:	**3.72**	
COP @ 17 F:	**2.52**	
SEER @ ARI Conditions:	**15.2**	
EER @ ARI Conditions:	**12.5**	
HSPF @ ARI Conditions:	**7.5**	

Actual Clg Airflow:	**1200.0**	CFM
Standard Clg Airflow:	**1200.0**	CFM
Total Net Clg Capacity:	**34.71**	MBH
Net Sensible Clg Capacity:	**26.31**	MBH
Htg HP Capacity:	**34.08**	MBH
Htg HP Integrated Capacity:	**34.08**	MBH
Heating HP Compressor Power:	**2.68**	kW
Total System Power:	**3.35**	kW

System Parameters

Outdoor Unit Parameters

Unit Model:	**27SCA536A003**	
Unit Size (Nominal):	**3 Tons (Size 36)**	
Voltage:	**208/230-1-60**	V-Ph-Hz
Clg Ent Air DB Ambient:	**95.0**	°F
Htg Ent Air DB Ambient:	**47.0**	°F

Indoor Coil Parameters

Unit Model:	**FT5ANXC36L00**	
Unit Size (Nominal):	**36,000 Btuh**	
Voltage:	**208-1-60**	V-Ph-Hz
Ent Air DB:	**80.00**	°F
Ent Air WB:	**67.00**	°F
Ent Enthalpy:	**31.44**	BTU/lb
Lvg Air DB:	**59.70**	°F
Lvg Air WB:	**57.97**	°F
Lvg Enthalpy:	**25.01**	BTU/lb
Htg Ent Air DB:	**70.0**	°F
Htg Lvg Air DB:	**96.3**	°F
Heating Size (Nominal):	**No Heat**	
Total External Static Pressure:	**0.75**	in wg

Electrical Data

Outdoor Electrical Data

Unit Voltage:	**208/230-1-60**	V-Ph-Hz
Fan Motor FLA:	**1.20**	Amps
MCA:	**19.2**	Amps
Max Fuse:	**30**	Amps
Operating Range Min:	**197**	V
Operating Range Max:	**253**	V
Compressor RLA:	**14.4**	Amps
Compressor LRA:	**86.0**	Amps

Indoor Electrical Data:

(For units with no factory installed electric heaters)

Unit Voltage:	**208-1-60**	V-Ph-Hz
Unit FLA:	**4.0**	Amps
Unit MCA:	**5.0**	Amps
Unit MOCP:	**15.0**	Amps
Unit Min Wire Size:	**14.0**	
Unit Fuse/Ckt Bkr Amps:	**15.0**	Amps
Motor HP:	**1/2**	HP

Notice: Indoor Elect. data is for 208-1-60 voltage

The Product and Ratings Data in this program is subject to change at any time and without notice. Please refer to the latest product literature and the AHRI directory at www.ahridirectory.org for the most up-to-date information.

Acoustic Summary For ID 6

Project: Climatec - City of Esc - Real Property 04/12/2025
Prepared By: Shawn Harlan

Outdoor Unit Parameters:

Unit Model: **27SCA**
Unit Size: **3 Tons (Size 36)**
Variations: **Standard**

Octave Band Center Frequency, Hz	125	250	500	1k	2k	4k	8k	dBA
Sound Power,dB	70.6	69.9	68.5	66.0	63.1	59.0	53.2	
A-Weighted Sound Power, dBA								76.0

Indoor Coil Parameters:

Unit Model: **FT5A**
Unit Size: **36,000 Btuh**
Cabinet Insulation: **Singular, TXV**

Octave Band Center Frequency, Hz	63	125	250	500	1k	2k	4k
Sound Power,dB	69.0	65.0	61.0	58.0	56.0	54.0	50.0

The Product and Ratings Data in this program is subject to change at any time and without notice. Please refer to the latest product literature and the AHRI directory at www.ahridirectory.org for the most up-to-date information.

Certified Drawing For ID 6

Project: Climatec - City of Esc - Real Property
Prepared By: Shawn Harlan

04/12/2025

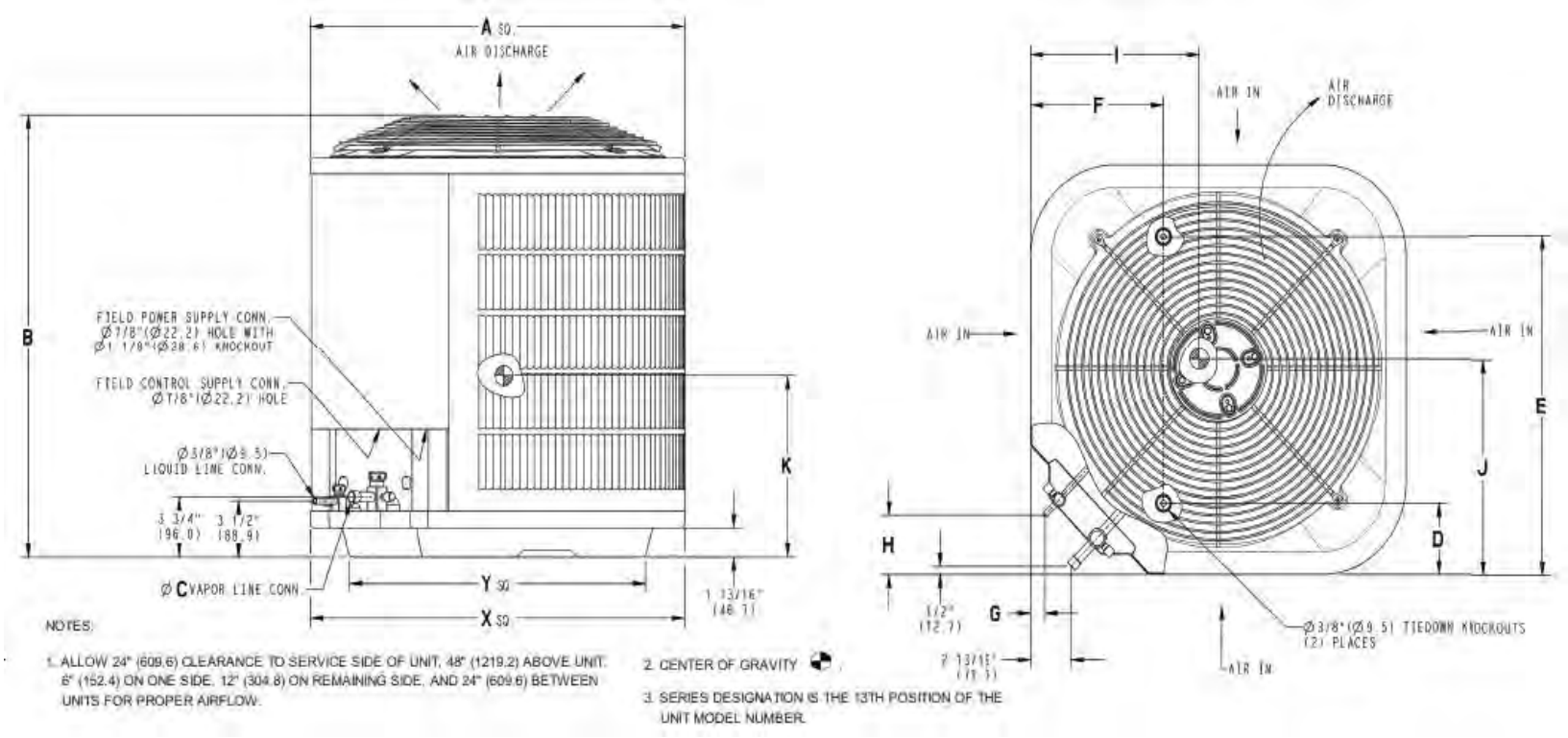

Outdoor Model

Unit Model:	**27SCA**	
Unit Size:	**3 Tons (Size 36)**	
Voltage:	**208/230-1-60**	V-Ph-Hz
SEER:	**15**	
PartNumber:	**27SCA536A003**	

Shipping Dimensions and Weights	Outdoor Unit
Height	36.44 in
Width	34.25 in
Length	34.25 in
Operating Weight	173. lb
Shipping Weight	193. lb

Dimensions										
A	B	C	D	E	F	G	H	I	J	K
31.19 in	32.06 in	0.75 in	6.56 in	24.69 in	9.13 in	1.13 in	3.81 in	12.00 in	14.13 in	16.25 in

The Product and Ratings Data in this program is subject to change at any time and without notice. Please refer to the latest product literature and the AHRI directory at www.ahridirectory.org for the most up-to-date information.

Certified Drawing For ID 6

Project: Climatec - City of Esc - Real Property
Prepared By: Shawn Harlan

04/12/2025

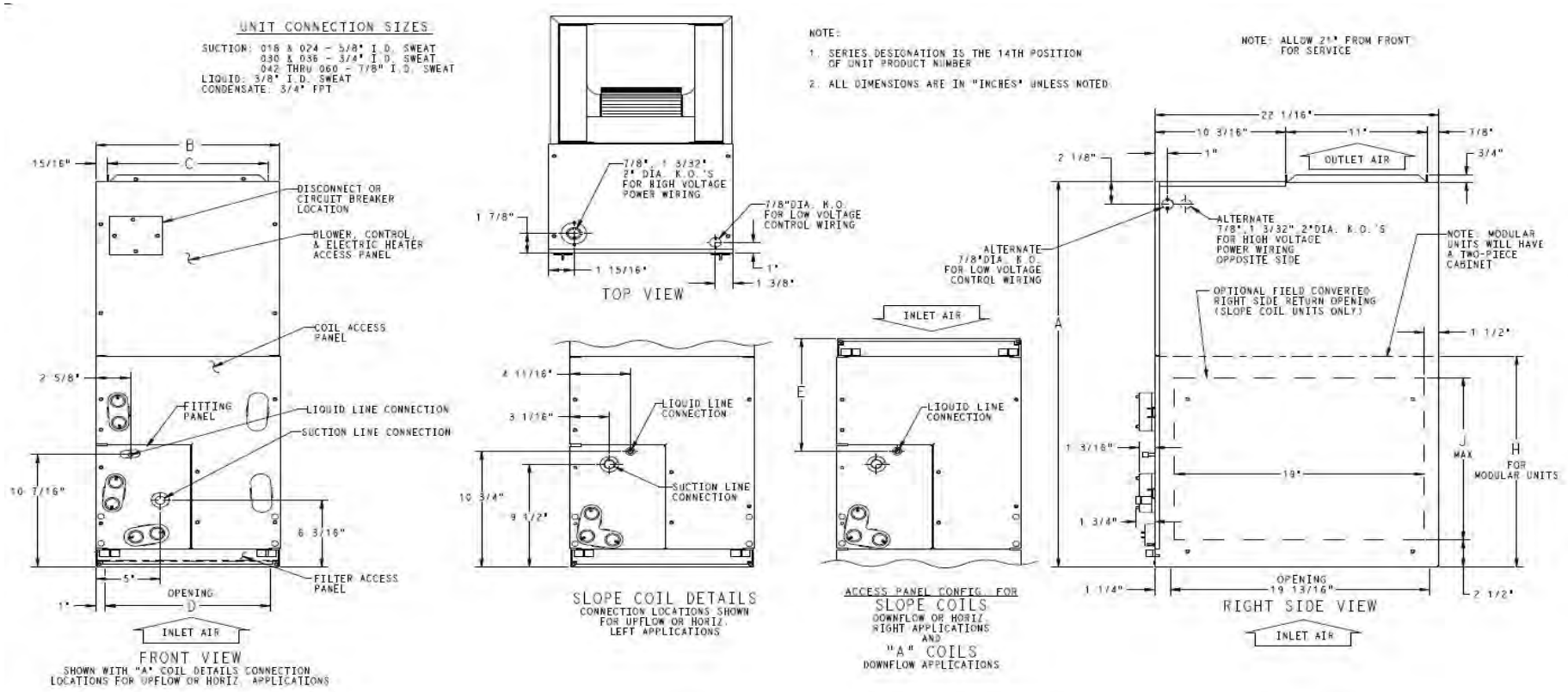

Indoor Coil

Unit Model: **FT5A**
Unit Size: **36,000 Btuh**
Voltage: **208-1-60** V-Ph-Hz
Cabinet Insulation: **Singular, TXV**
PartNumber: **FT5ANXC36L00**

Dimensions and Weights	Indoor Coil
Height	53.44 in
Width	21.13 in
Length	22.06 in
Shipping Weight	146. lb

Dimensions								
A	B	C	D	E	F	G	H	J
53.44 in	21.13 in	19.25 in	19.13 in	19.19 in	26.94 in	27.50 in	--	19.00 in

The Product and Ratings Data in this program is subject to change at any time and without notice. Please refer to the latest product literature and the AHRI directory at www.ahridirectory.org for the most up-to-date information.

Certified Drawing For ID 6

Project: Climatec - City of Esc - Real Property
Prepared By: Shawn Harlan

04/12/2025

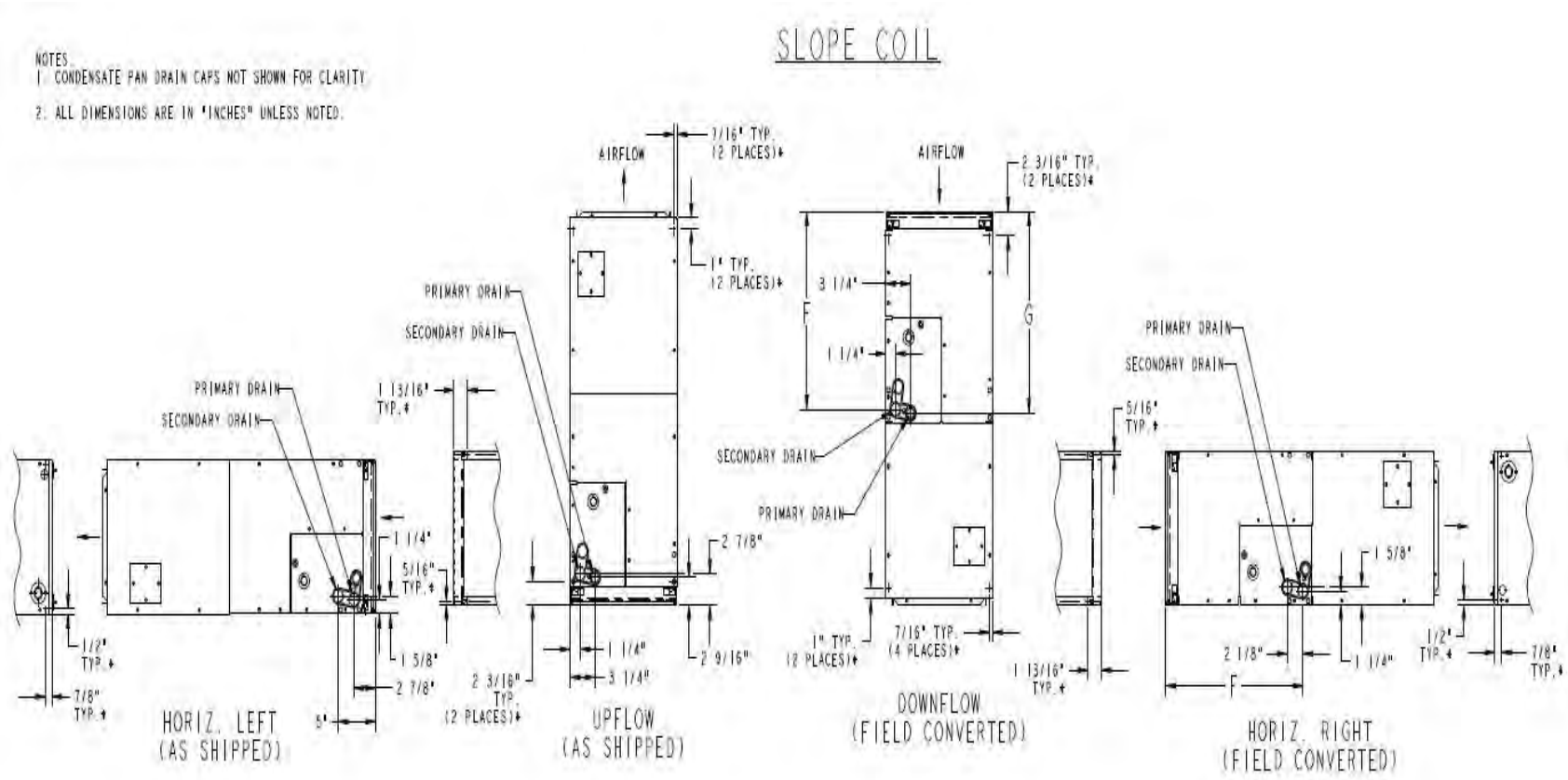

Indoor Coil

Unit Model:	**FT5A**	
Unit Size:	**36,000 Btuh**	
Voltage:	**208-1-60**	V-Ph-Hz
PartNumber:	**FT5ANXC36L00**	

The Product and Ratings Data in this program is subject to change at any time and without notice. Please refer to the latest product literature and the AHRI directory at www.ahridirectory.org for the most up-to-date information.

Room Size Limitations

	MAH1020H	MAH1024H	MAH1030H	MAH1036H	MAH1042H	MAH1048H	MAH1060H
Refrigerant Charge (oz.)	110	110	112	120	140	160	184
Minimum Room Size (ft²)	108.0	108.0	109.8	117.8	137.5	157.1	180.6
Minimum Supply Height (ft)	6.9	6.9	6.9	6.9	6.9	6.9	6.9
		MAH2024H	MAH2030H	MAH2036H	MAH2042H	MAH2048H	MAH2060H
Refrigerant Charge (oz.)		120	120	150	140	160	184
Minimum Room Size (ft²)		117.8	117.8	147.5	137.5	157.1	180.6
Minimum Supply Height (ft)		6.9	6.9	6.9	6.9	6.9	6.9

Marvair Heat Pump Model Identification

MAH1024HA050C++Z+1DE+D32++++++

1	Unit Designation/Family	**M** = Marvair Wall Mount **S** = Stock Unit
2	Energy Efficiency Ratio (EER)	**A** = 11
3	Refrigerant Type	**H** = R-454B
4	Compressor Type/Quantity	**1** = Single Stage Compressor **2** = 2-Stage Compressor
5 6 7	Unit Capacity/Nominal Cooling (BTUH)	**020** = 20,000 | **042** = 42,000 **024** = 24,000 | **048** = 48,000 **030** = 30,000 | **060** = 60,000 **036** = 36,000
8	System Type	**H** = Heat Pump
9	Power Supply (Volts-Hz-Phase)	**A** = 208/230-60-1 | **D** = 460-60-3 **C** = 208/230-60-3
10 11 12	Heat Designation @ Rated Voltage	**000** = No Heat | **090** = 9KW **040** = 4KW | **100** = 10KW **050** = 5KW | **120** = 12KW **060** = 6KW | **150** = 15KW **080** = 8KW
13	Ventilation Configuration	**C** = Economizer **D** = Motorized Damper w/Pressure Relief **E** = Motorized Damper w/Pressure Relief & Independent Motorized Damper Control **H** = GreenWheel® ERV **N** = Barometric Damper w/15% OSA **T** = Title 24 Compliant Economizer & Controls **+** = None **$** = Special
14	Dehumidification	**G** = Hot Gas Reheat **R** = Electric Reheat **T** = Electric Reheat w/Humidity Control **+** = None **$** = Special
15	Controls	**A** = Power Fail Alarm w/Additional Lockouts **C** = 24V EMS Relay Kit **+** = None **$** = Special
16	Operating Condition	**A** = Evaporator Freeze Sensor (EFS) **C** = EFS w/Hot Gas Bypass **D** = Desert Duty **E** = Extreme Duty **F** = Desert Duty w/Hard Start **G** = Desert Duty w/EFS **H** = Desert Duty w/Hard Start & EFS **J** = Extreme Duty w/Hard Start **K** = Extreme Duty w/EFS **M** = Extreme Duty w/Hard Start & EFS **N** = Hard Start **P** = Hard Start w/Low Ambient & CCH **Q** = Hard Start w/Low Ambient & Fan Cycle Control (FCC) **R** = Crank Case Heater (CCH) **T** = Hard Start w/EFS **U** = Hard Start w/Hot Gas Bypass **V** = Hard Start w/Low Ambient & CCH & EFS **W** = Low Ambient w/CCH **X** = Hot Gas Bypass **Y** = Low Ambient w/CCH & FCC **Z** = Low Ambient w/CCH & EFS **1** = Low Ambient w/FCC **2** = Low Ambient w/FCC & EFS **3** = CCH w/Hot Gas Bypass **+** = None **$** = Special
17	Indoor Air Quality Features	**A** = UV Light **D** = Dry Bulb Sensor **E** = Dry Bulb Sensor w/Dirty Filter **G** = Dirty Filter Sensor **K** = Bi-Polar Ionization **M** = Dry Bulb Sensor & CO2 Sensor (Only w/Economizer) **+** = None **$** = Special
18	Air Flow	**1** = Top Supply/Center Return (STD) **$** = Special
19	Compressor Location	**D** = Left Hand - All 3½ to 5 ton units **E** = Right Hand - All 1½ to 3 ton units
20	Filter Option	**A** = 2" Pleated (MERV 8, AC/HP-C) **C** = 2" Charcoal **D** = MERV 11 High Filtration Package **E** = MERV 13 High Filtration Package **F** = Filter Access Through Return Air Grille **W** = Aluminum Washable **+** = None **$** = Special
21	Corrosion Protection	**A** = Condenser Coil Only **C** = Evaporator Coil Only **D** = Both Coils Condenser & Evaporator **E** = All Coils Cond/Evap/Reheat **F** = Coat All **G** = Coastal Package & Evaporator Coil **K** = Coastal Package **+** = None **$** = Special
22 23	Engineering Revision Level	**A3** **D3**
24	Cabinet Color	**1** = Marvair Beige (STD) **2** = Gray (STD) **3** = Carlsbad Canyon (STD) **4** = White (STD) **5** = Stainless Steel Exterior **9** = Pebble Gray **A** = Stainless Steel - Unit **$** = Custom Color (Powder Coat)
25	Sound Attenuation	**2** = Compressor Blanket **+** = None
26	Security Option	**A** = Lockable Access Plate/Tamper Proof **C** = Tamper Proof Screws **D** = Lockable Access Plate w/Tamper Proof **+** = None **$** = Special
27	Fastener/Drain Pan Option	**A** = Stainless Steel Fasteners **C** = Stainless Steel Drain Pan **D** = Stainless Steel Fasteners & Drain Pan **+** = None **$** = Special
28	Miscellaneous	**C** = Copeland Compressor **+** = None **$** = Special
29	Unused	**+** = None **$** = Special
30	Special Variation	**+** = None **$** = Special Configuration Not Covered by Model Nomenclature

Note: Not all options are available with all configurations. Contact your Marvair sales representative for configuration details and feature compatibility.

Marvair MAH Single Stage Heat Pump Certified Ratings & Performance

Efficiency and Capacity Ratings at ANSI/AHRI Standard 390 - MAH Heat Pumps

Model Number	MAH1020H	MAH1024H			MAH1030H			MAH1036H			MAH1042H			MAH1048H			MAH1060H		
	A	A	C	D	A	C	D	A	C	D	A	C	D	A	C	D	A	C	D
Cooling BTUH[1]	20,000	24,000			29,000			35,000			42,000			46,000			57,000		
EER[2]	11	11			11			11			11			11			11		
High Temperature Heating[3]	20,000	24,000			27,000			30,000			34,000			42,000			51,000		
High Temperature COP[4]	3.3	3.3			3.3			3.3			3.3			3.3			3.3		
Rated Air Flow (CFM[5])	760	820			1,150			1,200			1,350			1,700			1,800		

[1]Cooling is rated at 95°F (35°C) outdoor and 80°F DB/67°F WB (26.5°C DB/19.5°C WB) return air.
[2]EER = Energy Efficiency Ratio
[3]High Temperature Heating & COP are rated at 47°F DB/43°WB (8.3°C DB/6.1°C WB) outdoor and 70°F (21.1°C) return air.
[4]COP = Coefficient of Performance
[5]CFM = Cubic Feet per Minute

Ratings are with no outside air. Performance will be affected by altitude. Ratings are at 230 volts for 208/230 volt units ("A" & "C" models) and 460 volts for "D" models. Operation of units at a different voltage from that of the rating point will affect performance and air flow.

Sensible Total Heat Ratio @ 95°F (35°C) Outside Air DB - MAH Heat Pumps

Model Number	MAH1020H	MAH1024H			MAH1030H			MAH1036H			MAH1042H			MAH1048H			MAH1060H		
	A	A	C	D	A	C	D	A	C	D	A	C	D	A	C	D	A	C	D
Total Capacity	20,000	24,000			29,000			35,000			42,000			46,000			57,000		
Sensible Heat Ratio	0.80	0.80			0.70			0.70			0.70			0.70			0.60		
Sensible Capacity	15,000	18,600			21,500			24,500			27,400			31,000			36,900		
Rated Air Flow (CFM[1])	760	820			1,150			1,200			1,350			1,700			1,800		

[1]CFM=Cubic Feet per Minute
Sensible Heat Ratios based upon ANSI/AHRI std. 390 outdoor conditions of 95°F (35°C) outdoor and 80°F DB/67°F WB (26.5°C DB/19.5°C WB) return air.

Cooling Performance (BTUH) at Various Outdoor Temperatures - MAH Heat Pumps

Model Number	Outdoor Temperature											
	75°F/24°C	80°F/26.5°C	85°F/29°C	90°F/32°C	95°F/35°C	100°F/38°C	105°F/40.5°C	110°F/43.3°C	115°F/46°C	120°F/49°C	125°F/52°C	130°F/54°C
MAH1020H	23,200	22,400	21,600	20,800	20,000	19,200	18,400	17,600	17,200	16,840	16,480	16,120
MAH1024H	27,840	26,880	25,920	24,960	24,000	23,040	22,080	21,120	20,640	20,208	19,776	19,344
MAH1030H	33,640	32,480	31,320	30,160	29,000	27,840	26,680	25,520	24,940	24,418	23,896	23,374
MAH1036H	40,600	39,200	37,800	36,400	35,000	33,600	32,200	30,800	30,100	29,470	28,840	28,210
MAH1042H	48,720	47,040	45,360	43,680	42,000	40,320	38,640	36,960	36,120	35,364	34,608	33,852
MAH1048H	53,360	51,520	49,680	47,840	46,000	44,160	42,320	40,480	39,560	38,732	37,904	37,076
MAH1060H	66,120	63,840	61,560	59,280	57,000	54,720	52,440	50,160	49,020	47,994	46,968	45,942

Based upon ANSI/AHRI std. 390 return air conditions of 80°F DB/67°F WB (26.5°C DB/19.5°C WB). Return air at rated air flow.

Heating Performance (BTUH) at Various Outdoor Temperatures - MAH Heat Pumps

Model Number	Outdoor Temperature								
	10°F/-12.2°C	17°F/-8.3°C	20°F/-6.7°C	30°F/-1.1°C	40°F/4.4°C	47°F/8.3°C	50°F/10°C	60°F/15.6°C	70°F/21.1°C
MAH1020H	10,766	11,333	12,200	15,233	17,833	20,000	20,600	21,500	22,500
MAH1024H	11,560	13,600	14,640	18,280	21,400	24,000	24,720	25,800	27,000
MAH1030H	15,130	17,800	18,720	21,940	24,700	27,000	27,810	29,025	30,375
MAH1036H	15,810	18,600	19,740	23,730	27,150	30,000	30,900	32,250	33,750
MAH1042H	18,700	22,000	23,340	28,030	32,050	35,400	36,462	38,055	39,825
MAH1048H	20,400	24,000	25,800	32,100	37,500	42,000	43,260	45,150	47,250
MAH1060H	22,900	27,000	29,300	37,500	44,600	51,000	51,900	54,300	61,100

Based upon ANSI/AHRI std. 390 return air conditions of 70°F DB (21.1°C DB). Return air at rated air flow.

Electrical Characteristics - Compressor, Fan, Ventilation & Blower Motors
MAH Heat Pumps with Single Stage Compressor

Basic Model	Compressor				Outdoor Fan Motor				Indoor Blower Motor				Ventilation GreenWheel AMPS		
	Type	Volts-Hz-Ph	RLA[1]	LRA[2]	Volts-Hz-PH	RPM[3]	FLA[4]	HP[5]	Volts-Hz-PH	RPM[3]	FLA[4]	HP[5]	OAM[6]	EXM[7]	WD[8]
MAH1020HA	Scroll	208/230-60-1	10.3	60.2	208/230-60-1	1200	3.5	1/3	208/230-60-1	1200	2.8	1/3			
MAH1024HA		208/230-60-1	11.9	67.8	208/230-60-1	1200	3.5	1/3	208/230-60-1	1200	2.8	1/3	1.0	1.0	0.2
MAH1030HA		208/230-60-1	13.5	82.5	208/230-60-1	1200	3.5	1/3	208/230-60-1	1200	4.1	1/2	1.0	1.0	0.2
MAH1036HA		208/230-60-1	14.7	109.0	208/230-60-1	1200	3.5	1/3	208/230-60-1	1050	4.1	1/2	1.0	1.0	0.2
MAH1042HA		208/230-60-1	18.6	123.0	208/230-60-1	1200	5.3	1/2	208/230-60-1	1050	4.1	1/2	1.0	1.0	0.2
MAH1048HA		208/230-60-1	22.4	126.0	208/230-60-1	1200	5.3	1/2	208/230-60-1	1050	4.1	1/2	1.0	1.0	0.2
MAH1060HA		208/230-60-1	25.6	155.0	208/230-60-1	1200	6.3	3/4	208/230-60-1	1050	6.0	3/4	1.0	1.0	0.2
MAH1024HC	Scroll	208/230-60-3	8.3	67.7	208/230-60-1	1200	3.5	1/3	208/230-60-1	1200	2.8	1/3			
MAH1030HC		208/230-60-3	12.8	97.5	208/230-60-1	1200	3.5	1/3	208/230-60-1	1200	4.1	1/2	1.0	1.0	0.2
MAH1036HC		208/230-60-3	12.2	102.8	208/230-60-1	1200	3.5	1/3	208/230-60-1	1200	4.1	1/2	1.0	1.0	0.2
MAH1042HC		208/230-60-3	12.8	102.8	208/230-60-1	1200	5.3	1/2	208/230-60-1	1050	4.1	1/2	1.0	1.0	0.2
MAH1048HC		208/230-60-3	12.8	120.4	208/230-60-1	1200	5.3	1/2	208/230-60-1	1050	4.1	1/2	1.0	1.0	0.2
MAH1060HC		208/230-60-3	18.6	155.0	208/230-60-1	1200	6.3	3/4	208/230-60-1	1050	6.0	3/4	1.0	1.0	0.2
MAH1024HD	Scroll	460-60-3	5.1	38.1	208/230-60-1	1200	3.5	1/3	208/230-60-1	1200	2.8	1/3			
MAH1030HD		460-60-3	5.1	44.3	208/230-60-1	1200	3.5	1/3	208/230-60-1	1200	4.1	1/2	1.0	1.0	0.2
MAH1036HD		460-60-3	5.8	50.0	208/230-60-1	1200	3.5	1/3	208/230-60-1	1200	4.1	1/2	1.0	1.0	0.2
MAH1042HD		460-60-3	5.8	50.0	208/230-60-1	1200	5.3	1/2	208/230-60-1	1050	4.1	1/2	1.0	1.0	0.2
MAH1048HD		460-60-3	6.0	49.4	208/230-60-1	1200	5.3	1/2	208/230-60-1	1050	4.1	1/2	1.0	1.0	0.2
MAH1060HD		460-60-3	8.3	58.1	208/230-60-1	1200	6.3	3/4	208/230-60-1	1050	6.0	3/4	1.0	1.0	0.2
MAH1024HZ	Scroll	575-60-3	3.8	27.7	208/230-60-1	1200	3.5	1/3	208/230-60-1	1200	2.8	1/3			
MAH1030HZ		575-60-3	4.5	27.1	208/230-60-1	1200	3.5	1/3	208/230-60-1	1200	4.1	1/2	1.0	1.0	0.2
MAH1036HZ		575-60-3	4.5	41.0	208/230-60-1	1200	3.5	1/3	208/230-60-1	1200	4.1	1/2	1.0	1.0	0.2
MAH1042HZ		575-60-3	5.1	41.0	208/230-60-1	1200	5.3	1/2	208/230-60-1	1050	4.1	1/2	1.0	1.0	0.2
MAH1048HZ		575-60-3	5.8	41.0	208/230-60-1	1200	5.3	1/2	208/230-60-1	1050	4.1	1/2	1.0	1.0	0.2
MAH1060HZ		575-60-3	7.7	47.8	208/230-60-1	1200	6.3	3/4	208/230-60-1	1050	6.0	3/4	1.0	1.0	0.2

[1]RLA = Rated Load Amps
[2]LRA = Locked Rotor Amps
[3]RPM = Revolutions per Minute
[4]FLA = Full Load Amps
[5]HP = Horsepower
[6]OAM = Outside Air Mover
[7]EXM = Exhaust Air Mover
[8]WD = Wheel Drive Motor
The 460 volt units have a step down transformer for the 230 volt motors.

MAH Heat Pumps Summary Electrical Ratings (Wire and HACR Circuit Breaker Sizing) - Ventilation Configuration:

C: Economizer, Outside Air with Pressure Relief
D: Motorized 2-Position Damper, up to 450 cfm of Outside Air w/Pressure Relief
E: Motorized Damper w/Pressure Relief & Independent Motorized Damper Control
N: Barometric Damper, up to 15% Outside Air
T: Title 24 Compliant Economizer & Controls

Electric Heat		000 = None		040 = 4 kw		050 = 5 kw		060 = 6 kw		080 = 8 kw		090 = 9 kw		100 = 10 kw		120 = 12 kw		150 = 15 kw	
Basic Model	Volts-Hz-Ph	SPPE[3]		SPPE[3]		SPPE[3]		SPPE[3]		SPPE[3]		SPPE[3]		SPPE[3]		SPPE[3]		SPPE[3]	
		MCA[1]	MFS[2]	MCA[1]	MFS[2]	MCA[1]	MFS[2]	MCA[1]	MFS[2]	MCA[1]	MFS[2]	MCA[1]	MFS[2]	MCA[1]	MFS[2]	MCA[1]	MFS[2]	MCA[1]	MFS[2]
MAH1020HA	208/230-60-1	19.2	25	40.0	45	45.2	50	50.4	60	60.8	70			71.3	80				
MAH1024HA	208/230-60-1	21.2	30	42.0	45	47.2	50	52.4	60	62.8	70			73.3	80				
MAH1030HA	208/230-60-1	24.5	35	45.3	50	50.5	60	55.7	60	66.1	70			76.6	80	87.0	90	102.6	110
MAH1036HA	208/230-60-1	26.0	40	46.8	50	52.0	60	57.2	60	67.6	70			78.1	80	88.5	90	104.1	110
MAH1042HA	208/230-60-1	32.7	50	53.5	60	58.7	70							84.7	90	95.2	100	110.8	125
MAH1048HA	208/230-60-1	37.4	50	58.2	70	63.4	80							89.5	100	99.9	100	115.5	125
MAH1060HA	208/230-60-1	44.3	60	65.1	80	70.3	90							96.4	110	106.8	110	122.4	125
MAH1024HC	208/230-60-3	16.7	20					34.7	35			43.7	45			52.8	60	61.8	70
MAH1030HC	208/230-60-3	23.6	35					41.6	50			50.7	60			59.7	60	68.7	70
MAH1036HC	208/230-60-3	22.9	35					40.9	45			49.9	50			58.9	60	68.0	70
MAH1042HC	208/230-60-3	25.4	35					43.4	50			52.5	60			61.5	70	70.5	80
MAH1048HC	208/230-60-3	25.4	35					43.4	50			52.5	60			61.5	70	70.5	80
MAH1060HC	208/230-60-3	35.6	50					53.6	60			62.6	70			71.6	80	80.7	90
MAH1024HD	460-60-3	9.5	15					18.5	20			23.1	25			27.6	30	32.1	35
MAH1030HD	460-60-3	10.2	15					19.2	20			23.7	25			28.2	30	32.7	35
MAH1036HD	460-60-3	11.1	15					20.1	25			24.6	25			29.1	30	33.6	35
MAH1042HD	460-60-3	12.0	15					21.0	25			25.5	30			30.0	30	34.5	35
MAH1048HD	460-60-3	12.2	15					21.2	25			25.7	30			30.2	35	34.8	35
MAH1060HD	460-60-3	16.5	20					25.5	30			30.1	35			34.6	35	39.1	40
MAH1024HZ	575-60-3	7.3	15					14.8	15			18.6	20			22.3	25	26.1	30
MAH1030HZ	575-60-3	8.7	15					16.2	20			20.0	20			23.7	25	27.5	30
MAH1036HZ	575-60-3	8.7	15					16.2	20			20.0	20			23.7	25	27.5	30
MAH1042HZ	575-60-3	10.1	15					17.7	20			21.4	25			25.2	30	29.0	30
MAH1048HZ	575-60-3	11.0	15					18.5	20			22.3	25			26.1	30	29.8	30
MAH1060HZ	575-60-3	14.5	20					22.1	25			25.8	30			29.6	30	33.4	35

S-Circuit - The user can move a pin on the board to control whether the electric heat will operate simultaneously with the compressor (S Circuit – NO) or will not run simultaneously with the compressor (S Circuit – Yes).
[1]MCA = Minimum Circuit Ampacity (Wiring Size Amps) [2]MFS = Maximum Fuse or HACR Breaker Size [3]SPPE = Single Point Power Entry
MCA & MFS are calculated at 230 volts on the 208-230v. (HPA & HPC) models. The 460 volt HPD models are calculated at 460 volts. This chart should only be used as a guideline for estimating conductor size and overcurrent protection. For the requirements of specific units, always refer to the data label on the unit.

Dimensional Data: MAH1020H/1024H & MAH2024H

Engineering Revision "A"

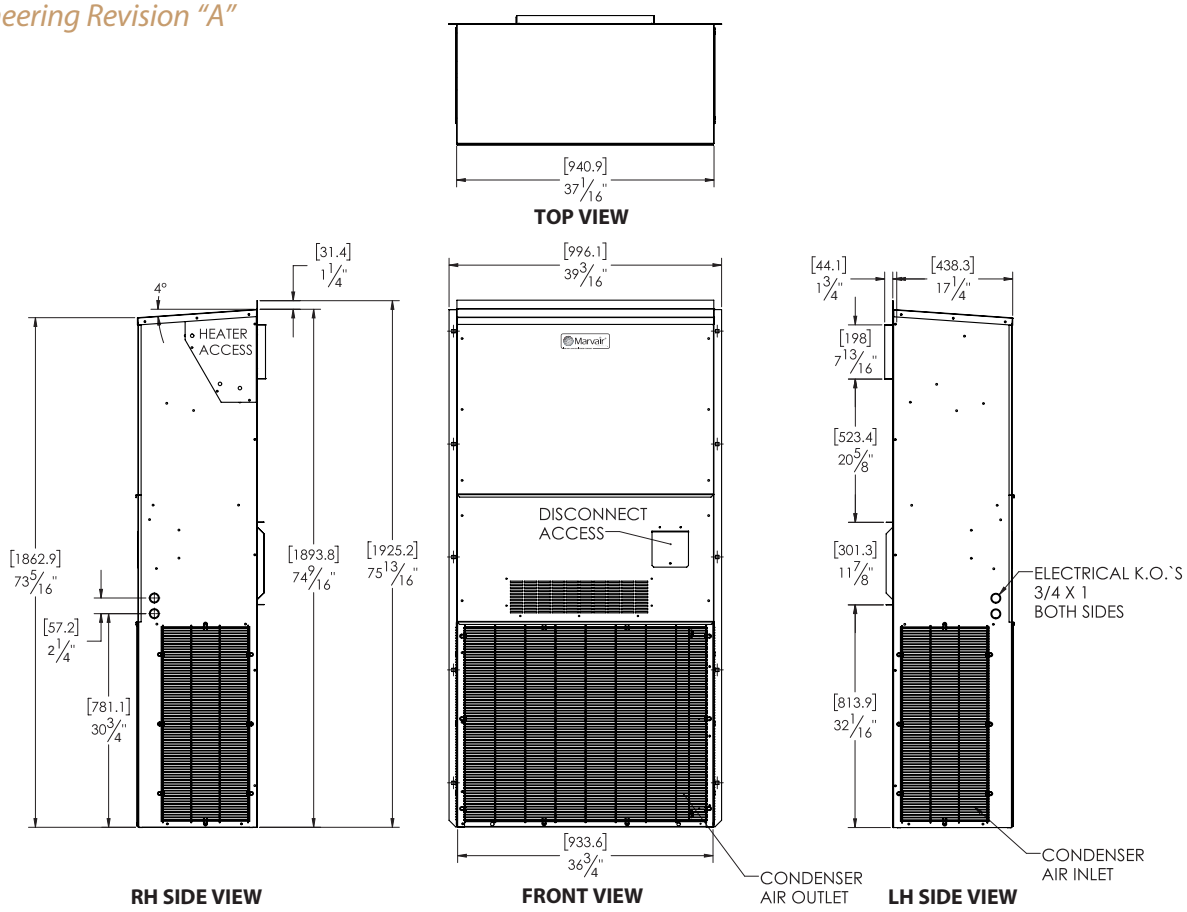

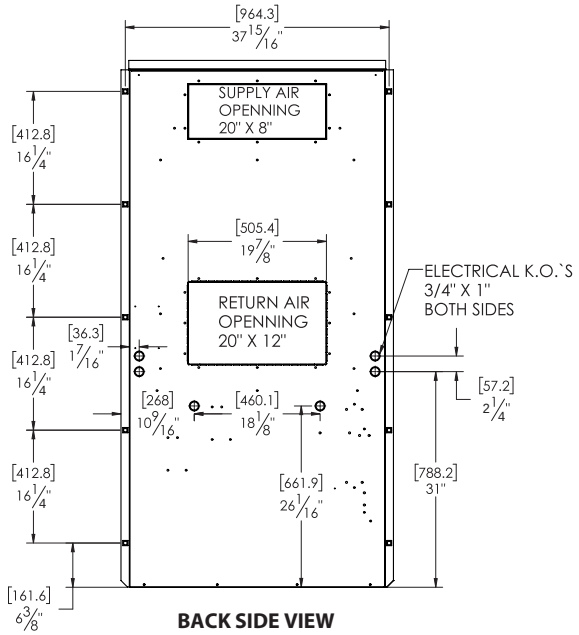

Installation Weight

MAH1020H/1024H & MAH2024H	Base	w/Economizer	w/3 Phase	w/Economizer & 3 Phase
Pounds	337	357	356	376
Kilograms	153	162	161	171

Filter Size

MAH1020H/1024H & MAH2024H	INCHES	MILLIMETERS	PART NUMBER	FILTERS PER UNIT	MERV RATING
RETURN AIR FILTER	16 x 25 x 2	406 x 635 x 51	80137	1	8 (STD)

Note: All overall outside dimensions are given with +/- .250" (6mm) tolerance.

SUBMITTAL

Project

Climatec - City of Esc - Vineyard Golf Course

Date

Saturday, April 12, 2025

Shawn Harlan
Sigler - Brea
205 Puente Street
Brea CA

Table Of Contents

Project: Climatec - City of Esc - Vineyard Golf Course 04/12/2025
Prepared By: Shawn Harlan

ID 2 **3**
Unit Report 4
Performance Summary 5
System Parameters 5
Electrical Data 5
Acoustic Summary 6
Certified Drawing 7
ID 1 **10**
Unit Report 11
Performance Summary 12
System Parameters 12
Electrical Data 12
Acoustic Summary 13
Certified Drawing 14

ID 2

Submittal Cover Sheet
Unit Report
Performance Summary Report
Acoustic Summary
Certified Drawings

Unit Report For ID 2

Project: Climatec - City of Esc - Vineyard Golf Course 04/12/2025
Prepared By: Shawn Harlan

Outdoor Unit Parameters

Unit Model:	**27SCA**	
Unit Size:	**3 Tons (Size 36)**	
Voltage:	**208/230-3-60**	V-Ph-Hz

Indoor Coil Parameters

Unit Model:	**FT5A**	
Unit Size:	**48,000 Btuh**	
Cabinet Insulation:	**Singular, TXV**	
Voltage:	**208-1-60**	V-Ph-Hz
Refrigerant Type:	**Puron Advance**	
Heating Size:	**No Heat**	

Outdoor Unit Dimensions and Weight

Unit Length:	**31.1875**	in
Unit Width:	**31.1875**	in
Unit Height:	**32.0625**	in
Unit Shipping Weight:	**193.**	lb

Indoor Coil Dimensions and Weight

Unit Length:	**22.06**	in
Unit Width:	**21.1**	in
Unit Height:	**53.44**	in
Unit Shipping Weight:	**168.**	lb

RESIDENTIAL APPLICATIONS

This warranty is to the original purchasing owner and subsequent owners only to the extent and as stated in the Warranty Conditions and below. The limited warranty period in years, depending on the part and the claimant, is as shown in the table below.

Limited Warranty (Years)		
Item	**Original Owner**	**Subsequent Owner**
Parts	10* (or 5)	5
Compressor	10* (or 5)	5

***If properly registered within 90 days of original installation, otherwise 5 years (except in California and Quebec and other jurisdictions that prohibit warranty benefits conditioned on registration). See Warranty Conditions below.**

OTHER APPLICATIONS

The warranty period is five (5) years on the compressor, and one (1) year on all other parts. The warranty is the original owner only and is not available for subsequent owners.

Ordering Information

Part Number	Description	Quantity
Outdoor Unit		
27SCA536A005	27SCA Comfort Single Stage Heat Pump with Puron Refrigerant Advanced 3 Tons Cooling	1
	15 SEER @ ARI Conditions	
Indoor Coil		
FT5ANXC48L00	Performance Series Fan Coil with Puron Advance 208/230-1-60	1
	Singular, TXV	
	Aluminum	

The Product and Ratings Data in this program is subject to change at any time and without notice. Please refer to the latest product literature and the AHRI directory at www.ahridirectory.org for the most up-to-date information.

Performance Summary For ID 2

Project: Climatec - City of Esc - Vineyard Golf Course 04/12/2025
Prepared By: Shawn Harlan

System Performance

System:	**27SCA/FT5A**	
System Quantity:	**1**	
Altitude:	**0.0**	ft
Linear Pipe Length:	**0.0**	ft
COP @ 47 F:	**3.76**	
COP @ 17 F:	**2.58**	
SEER @ ARI Conditions:	**15.5**	
EER @ ARI Conditions:	**12.5**	
HSPF @ ARI Conditions:	**7.5**	

Actual Clg Airflow:	**1200.0**	CFM
Standard Clg Airflow:	**1200.0**	CFM
Total Net Clg Capacity:	**34.89**	MBH
Net Sensible Clg Capacity:	**26.45**	MBH
Htg HP Capacity:	**34.08**	MBH
Htg HP Integrated Capacity:	**34.08**	MBH
Heating HP Compressor Power:	**2.65**	kW
Total System Power:	**3.37**	kW

System Parameters

Outdoor Unit Parameters

Unit Model:	**27SCA536A005**	
Unit Size (Nominal):	**3 Tons (Size 36)**	
Voltage:	**208/230-3-60**	V-Ph-Hz
Clg Ent Air DB Ambient:	**95.0**	°F
Htg Ent Air DB Ambient:	**47.0**	°F

Indoor Coil Parameters

Unit Model:	**FT5ANXC48L00**	
Unit Size (Nominal):	**48,000 Btuh**	
Voltage:	**208-1-60**	V-Ph-Hz
Ent Air DB:	**80.00**	°F
Ent Air WB:	**67.00**	°F
Ent Enthalpy:	**31.44**	BTU/lb
Lvg Air DB:	**59.59**	°F
Lvg Air WB:	**57.92**	°F
Lvg Enthalpy:	**24.98**	BTU/lb
Htg Ent Air DB:	**70.0**	°F
Htg Lvg Air DB:	**96.3**	°F
Heating Size (Nominal):	**No Heat**	
Total External Static Pressure:	**0.50**	in wg

Electrical Data

Outdoor Electrical Data

Unit Voltage:	**208/230-3-60**	V-Ph-Hz
Fan Motor FLA:	**1.20**	Amps
MCA:	**12.5**	Amps
Max Fuse:	**20**	Amps
Operating Range Min:	**187**	V
Operating Range Max:	**253**	V
Compressor RLA:	**9.0**	Amps
Compressor LRA:	**70.0**	Amps

Indoor Electrical Data:

(For units with no factory installed electric heaters)

Unit Voltage:	**208-1-60**	V-Ph-Hz
Unit FLA:	**5.7**	Amps
Unit MCA:	**7.1**	Amps
Unit MOCP:	**15.0**	Amps
Unit Min Wire Size:	**14.0**	
Unit Fuse/Ckt Bkr Amps:	**15.0**	Amps
Motor HP:	**3/4**	HP

Notice: Indoor Elect. data is for 208-1-60 voltage

The Product and Ratings Data in this program is subject to change at any time and without notice. Please refer to the latest product literature and the AHRI directory at www.ahridirectory.org for the most up-to-date information.

Acoustic Summary For ID 2

Project: Climatec - City of Esc - Vineyard Golf Course 04/12/2025
Prepared By: Shawn Harlan

Outdoor Unit Parameters:

Unit Model: **27SCA**
Unit Size: **3 Tons (Size 36)**
Variations: **Standard**

Octave Band Center Frequency, Hz	125	250	500	1k	2k	4k	8k	dBA
Sound Power,dB	70.6	69.9	68.5	66.0	63.1	59.0	53.2	
A-Weighted Sound Power, dBA								76.0

Indoor Coil Parameters:

Unit Model: **FT5A**
Unit Size: **48,000 Btuh**
Cabinet Insulation: **Singular, TXV**

Octave Band Center Frequency, Hz	63	125	250	500	1k	2k	4k
Sound Power,dB	69.0	65.0	61.0	58.0	56.0	54.0	50.0

The Product and Ratings Data in this program is subject to change at any time and without notice. Please refer to the latest product literature and the AHRI directory at www.ahridirectory.org for the most up-to-date information.

Certified Drawing For ID 2

Project: Climatec - City of Esc - Vineyard Golf Course
Prepared By: Shawn Harlan

04/12/2025

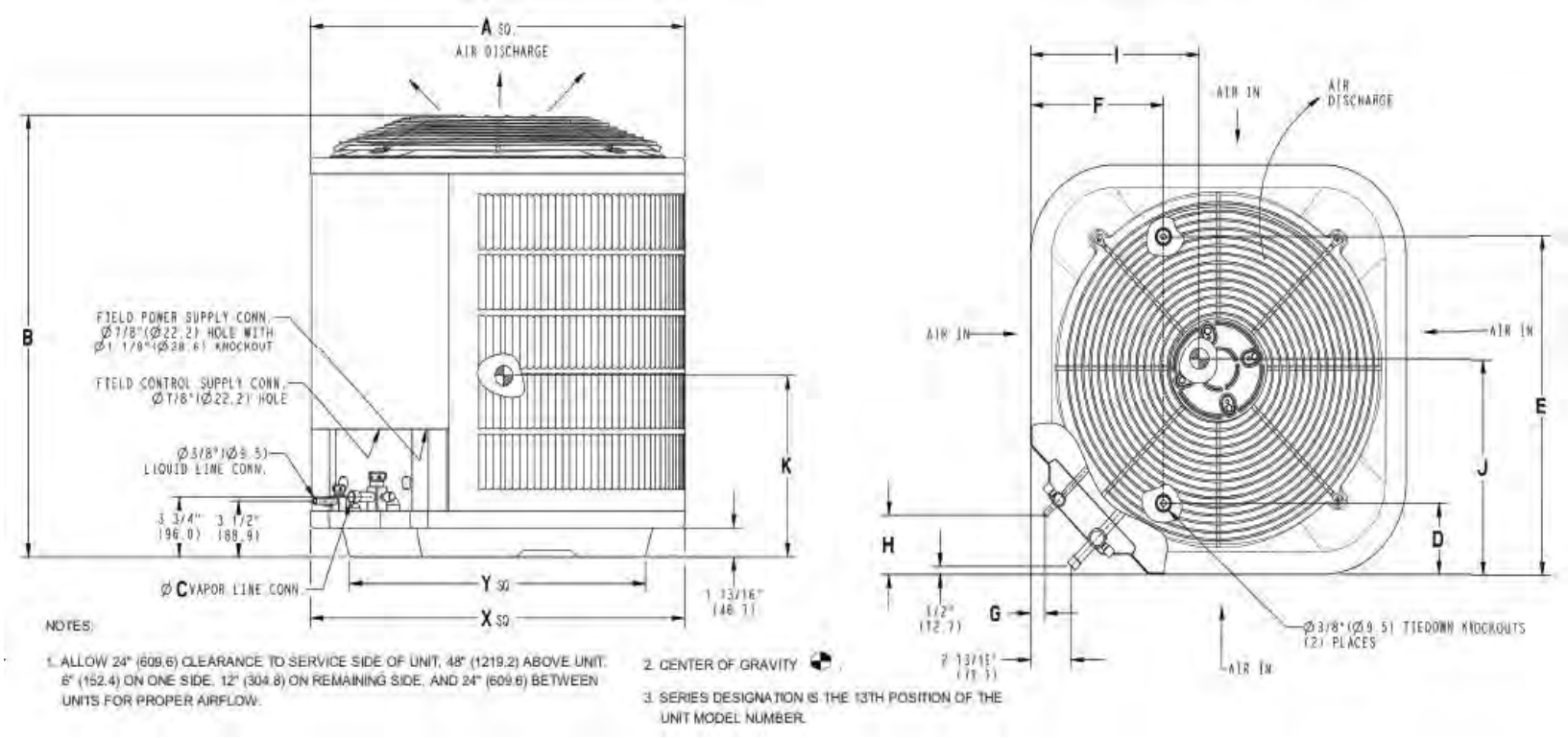

Outdoor Model

Unit Model:	**27SCA**	
Unit Size:	**3 Tons (Size 36)**	
Voltage:	**208/230-3-60**	V-Ph-Hz
SEER:	**15**	
PartNumber:	**27SCA536A005**	

Shipping Dimensions and Weights	Outdoor Unit
Height	36.44 in
Width	34.25 in
Length	34.25 in
Operating Weight	173. lb
Shipping Weight	193. lb

Dimensions										
A	B	C	D	E	F	G	H	I	J	K
31.19 in	32.06 in	0.75 in	6.56 in	24.69 in	9.13 in	1.13 in	3.81 in	12.00 in	14.13 in	16.25 in

The Product and Ratings Data in this program is subject to change at any time and without notice. Please refer to the latest product literature and the AHRI directory at www.ahridirectory.org for the most up-to-date information.

Certified Drawing For ID 2

Project: Climatec - City of Esc - Vineyard Golf Course
Prepared By: Shawn Harlan

04/12/2025

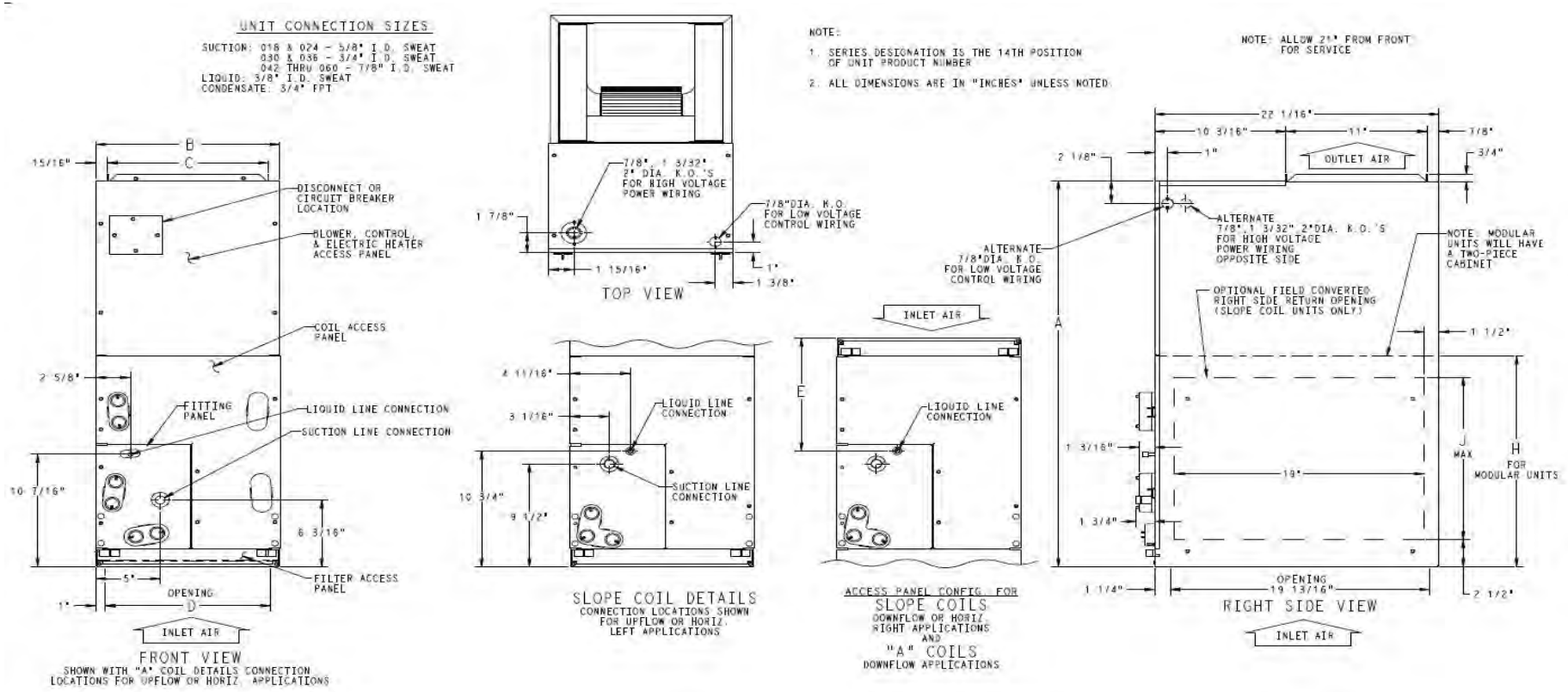

Indoor Coil

Unit Model: **FT5A**
Unit Size: **48,000 Btuh**
Voltage: **208-1-60** V-Ph-Hz
Cabinet Insulation: **Singular, TXV**
PartNumber: **FT5ANXC48L00**

Dimensions and Weights	Indoor Coil
Height	53.44 in
Width	21.13 in
Length	22.06 in
Shipping Weight	168. lb

Dimensions								
A	B	C	D	E	F	G	H	J
53.44 in	21.13 in	19.25 in	19.13 in	19.50 in	27.25 in	26.94 in	--	--

The Product and Ratings Data in this program is subject to change at any time and without notice. Please refer to the latest product literature and the AHRI directory at www.ahridirectory.org for the most up-to-date information.

Certified Drawing For ID 2

Project: Climatec - City of Esc - Vineyard Golf Course
Prepared By: Shawn Harlan

04/12/2025

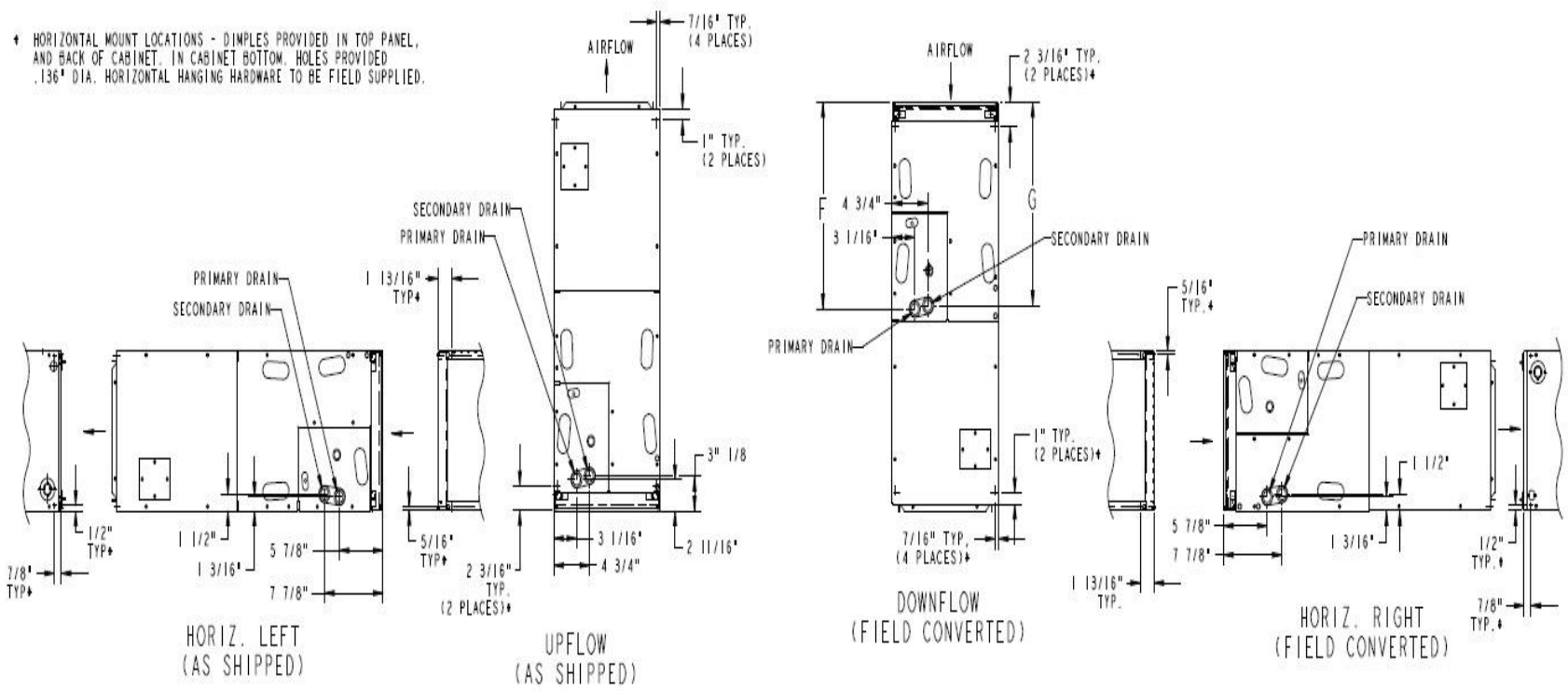

A-COIL

Indoor Coil

Unit Model:	**FT5A**	
Unit Size:	**48,000 Btuh**	
Voltage:	**208-1-60**	V-Ph-Hz
PartNumber:	**FT5ANXC48L00**	

The Product and Ratings Data in this program is subject to change at any time and without notice. Please refer to the latest product literature and the AHRI directory at www.ahridirectory.org for the most up-to-date information.

ID 1

Submittal Cover Sheet
Unit Report
Performance Summary Report
Acoustic Summary
Certified Drawings

Unit Report For ID 1

Project: Climatec - City of Esc - Vineyard Golf Course 04/12/2025
Prepared By: Shawn Harlan

Outdoor Unit Parameters

Unit Model:	**27SCA**	
Unit Size:	**5 Tons (Size 60)**	
Voltage:	**208/230-3-60**	V-Ph-Hz

Indoor Coil Parameters

Unit Model:	**FT5A**	
Unit Size:	**60,000 Btuh**	
Cabinet Insulation:	**Modular, TXV**	
Voltage:	**208-1-60**	V-Ph-Hz
Refrigerant Type:	**Puron Advance**	
Heating Size:	**No Heat**	

Outdoor Unit Dimensions and Weight

Unit Length:	**35**	in
Unit Width:	**35**	in
Unit Height:	**35.5**	in
Unit Shipping Weight:	**255.**	lb

Indoor Coil Dimensions and Weight

Unit Length:	**22.06**	in
Unit Width:	**24.69**	in
Unit Height:	**59.19**	in
Unit Shipping Weight:	**203.**	lb

RESIDENTIAL APPLICATIONS

This warranty is to the original purchasing owner and subsequent owners only to the extent and as stated in the Warranty Conditions and below. The limited warranty period in years, depending on the part and the claimant, is as shown in the table below.

Limited Warranty (Years)		
Item	**Original Owner**	**Subsequent Owner**
Parts	10* (or 5)	5
Compressor	10* (or 5)	5

***If properly registered within 90 days of original installation, otherwise 5 years (except in California and Quebec and other jurisdictions that prohibit warranty benefits conditioned on registration). See Warranty Conditions below.**

OTHER APPLICATIONS

The warranty period is five (5) years on the compressor, and one (1) year on all other parts. The warranty is the original owner only and is not available for subsequent owners.

Ordering Information

Part Number	Description	Quantity
Outdoor Unit		
27SCA560A005	27SCA Comfort Single Stage Heat Pump with Puron Refrigerant Advanced 5 Tons Cooling	1
	15 SEER @ ARI Conditions	
Indoor Coil		
FT5ANBD60L00	Performance Series Fan Coil with Puron Advance 208/230-1-60	1
	Modular, TXV	
	Aluminum	

The Product and Ratings Data in this program is subject to change at any time and without notice. Please refer to the latest product literature and the AHRI directory at www.ahridirectory.org for the most up-to-date information.

Performance Summary For ID 1

Project: Climatec - City of Esc - Vineyard Golf Course 04/12/2025
Prepared By: Shawn Harlan

System Performance

System:	**27SCA/FT5A**	
System Quantity:	**1**	
Altitude:	**0.0**	ft
Linear Pipe Length:	**0.0**	ft
COP @ 47 F:	**3.72**	
COP @ 17 F:	**2.60**	
SEER @ ARI Conditions:	**15.0**	
EER @ ARI Conditions:	**12.0**	
HSPF @ ARI Conditions:	**7.5**	

Actual Clg Airflow:	**2000.0**	CFM
Standard Clg Airflow:	**2000.0**	CFM
Total Net Clg Capacity:	**57.44**	MBH
Net Sensible Clg Capacity:	**44.26**	MBH
Htg HP Capacity:	**57.83**	MBH
Htg HP Integrated Capacity:	**57.83**	MBH
Heating HP Compressor Power:	**4.23**	kW
Total System Power:	**5.80**	kW

System Parameters

Outdoor Unit Parameters

Unit Model:	**27SCA560A005**	
Unit Size (Nominal):	**5 Tons (Size 60)**	
Voltage:	**208/230-3-60**	V-Ph-Hz
Clg Ent Air DB Ambient:	**95.0**	°F
Htg Ent Air DB Ambient:	**47.0**	°F

Indoor Coil Parameters

Unit Model:	**FT5ANBD60L00**	
Unit Size (Nominal):	**60,000 Btuh**	
Voltage:	**208-1-60**	V-Ph-Hz
Ent Air DB:	**80.00**	°F
Ent Air WB:	**67.00**	°F
Ent Enthalpy:	**31.44**	BTU/lb
Lvg Air DB:	**59.51**	°F
Lvg Air WB:	**58.04**	°F
Lvg Enthalpy:	**25.06**	BTU/lb
Htg Ent Air DB:	**70.0**	°F
Htg Lvg Air DB:	**96.8**	°F
Heating Size (Nominal):	**No Heat**	
Total External Static Pressure:	**0.50**	in wg

Electrical Data

Outdoor Electrical Data

Unit Voltage:	**208/230-3-60**	V-Ph-Hz
Fan Motor FLA:	**1.50**	Amps
MCA:	**21.5**	Amps
Max Fuse:	**35**	Amps
Operating Range Min:	**187**	V
Operating Range Max:	**253**	V
Compressor RLA:	**16.0**	Amps
Compressor LRA:	**156.4**	Amps

Indoor Electrical Data:

(For units with no factory installed electric heaters)

Unit Voltage:	**208-1-60**	V-Ph-Hz
Unit FLA:	**5.7**	Amps
Unit MCA:	**7.1**	Amps
Unit MOCP:	**15.0**	Amps
Unit Min Wire Size:	**14.0**	
Unit Fuse/Ckt Bkr Amps:	**15.0**	Amps
Motor HP:	**3/4**	HP

Notice: Indoor Elect. data is for 208-1-60 voltage

The Product and Ratings Data in this program is subject to change at any time and without notice. Please refer to the latest product literature and the AHRI directory at www.ahridirectory.org for the most up-to-date information.

Acoustic Summary For ID 1

Project: Climatec - City of Esc - Vineyard Golf Course 04/12/2025
Prepared By: Shawn Harlan

Outdoor Unit Parameters:

Unit Model: **27SCA**
Unit Size: **5 Tons (Size 60)**
Variations: **Standard**

Octave Band Center Frequency, Hz	125	250	500	1k	2k	4k	8k	dBA
Sound Power,dB	66.6	68.6	69.2	70.8	62.9	60.8	62.7	
A-Weighted Sound Power, dBA								74.0

Indoor Coil Parameters:

Unit Model: **FT5A**
Unit Size: **60,000 Btuh**
Cabinet Insulation: **Modular, TXV**

Octave Band Center Frequency, Hz	63	125	250	500	1k	2k	4k
Sound Power,dB	72.0	68.0	64.0	61.0	59.0	57.0	53.0

The Product and Ratings Data in this program is subject to change at any time and without notice. Please refer to the latest product literature and the AHRI directory at www.ahridirectory.org for the most up-to-date information.

Certified Drawing For ID 1

Project: Climatec - City of Esc - Vineyard Golf Course
Prepared By: Shawn Harlan

04/12/2025

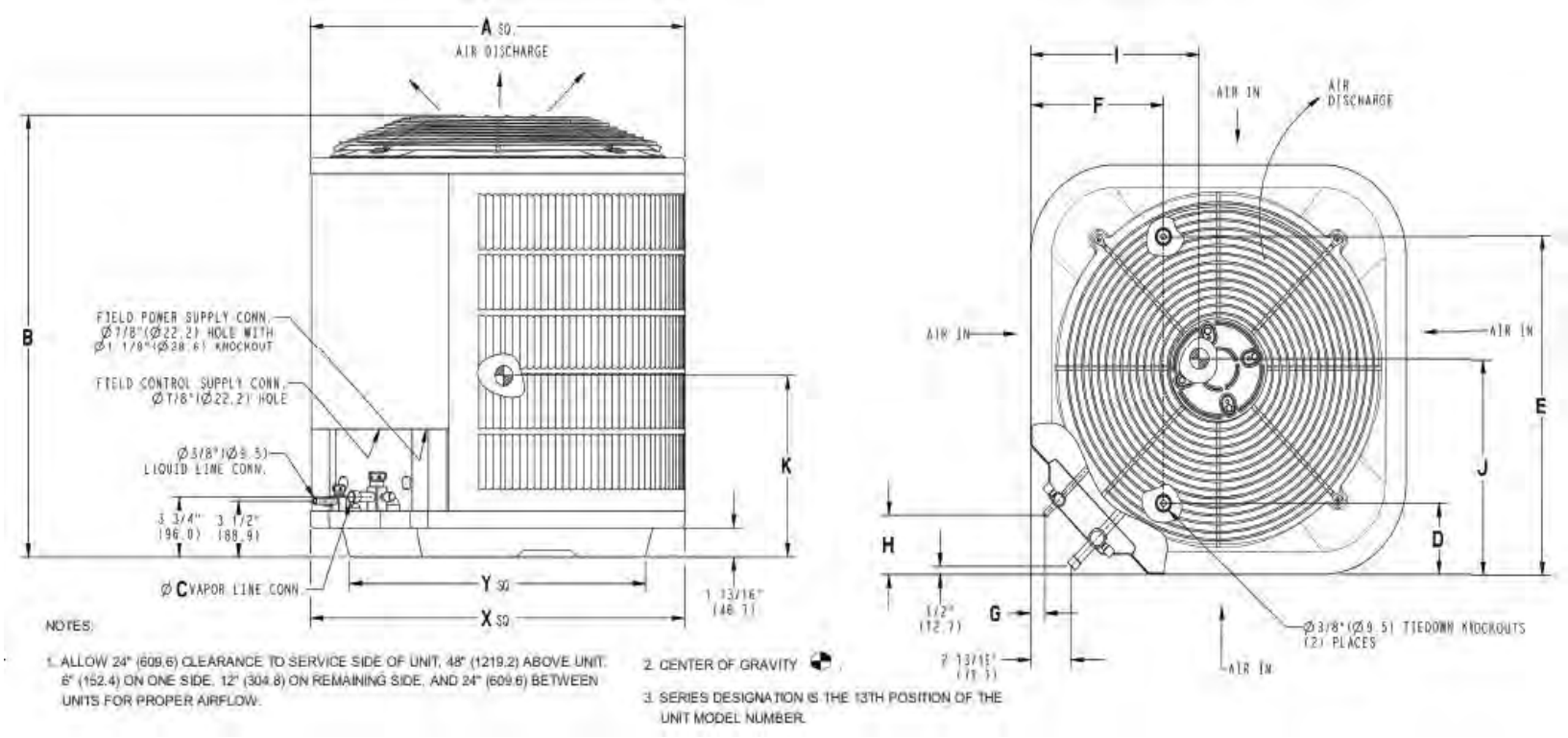

Outdoor Model

Unit Model:	**27SCA**	
Unit Size:	**5 Tons (Size 60)**	
Voltage:	**208/230-3-60**	V-Ph-Hz
SEER:	**15**	
PartNumber:	**27SCA560A005**	

Shipping Dimensions and Weights	Outdoor Unit
Height	39.81 in
Width	34.25 in
Length	34.25 in
Operating Weight	234. lb
Shipping Weight	255. lb

Dimensions										
A	B	C	D	E	F	G	H	I	J	K
35.00 in	35.50 in	0.88 in	6.56 in	28.44 in	9.13 in	1.13 in	3.81 in	13.00 in	15.50 in	16.75 in

The Product and Ratings Data in this program is subject to change at any time and without notice. Please refer to the latest product literature and the AHRI directory at www.ahridirectory.org for the most up-to-date information.

Certified Drawing For ID 1

Project: Climatec - City of Esc - Vineyard Golf Course
Prepared By: Shawn Harlan

04/12/2025

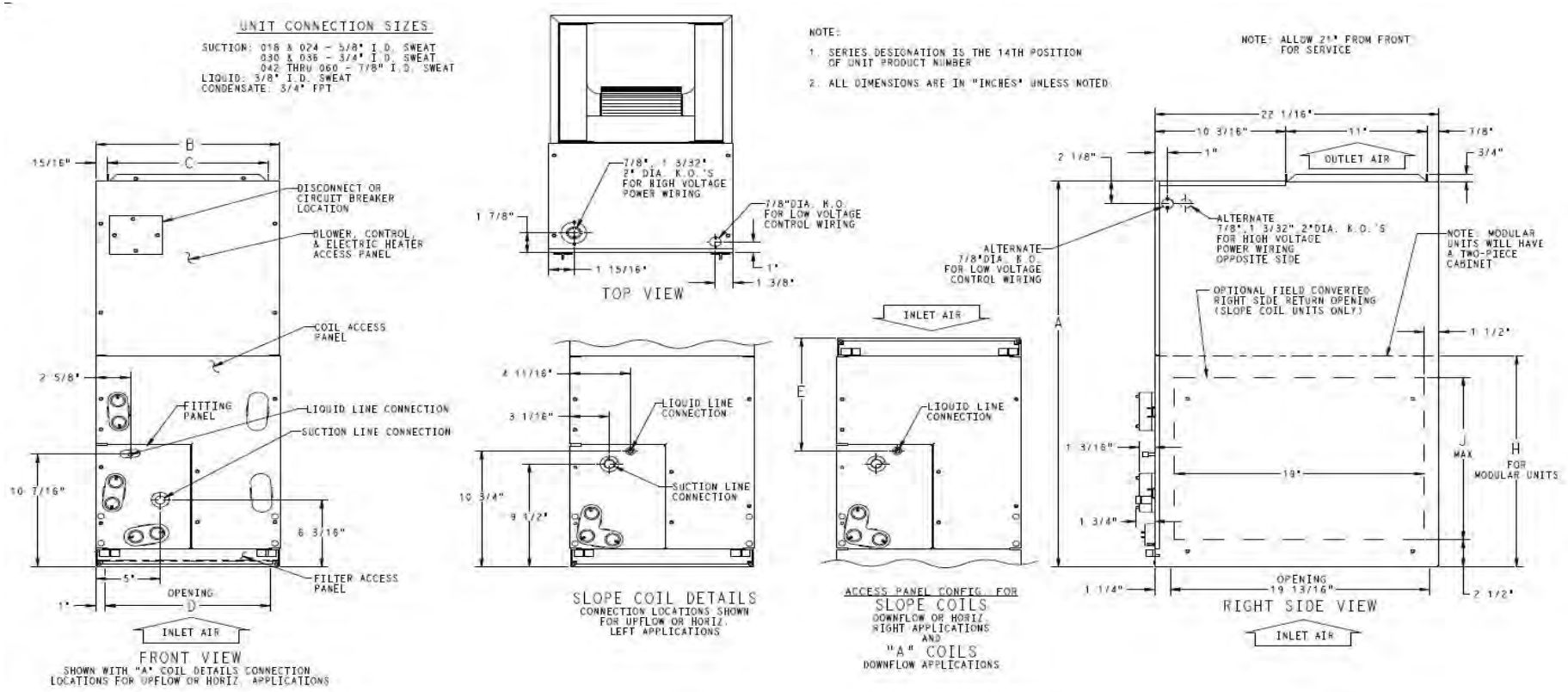

Indoor Coil

Unit Model: **FT5A**
Unit Size: **60,000 Btuh**
Voltage: **208-1-60** V-Ph-Hz
Cabinet Insulation: **Modular, TXV**
PartNumber: **FT5ANBD60L00**

Dimensions and Weights	Indoor Coil
Height	59.19 in
Width	24.69 in
Length	22.06 in
Shipping Weight	203. lb

Dimensions								
A	B	C	D	E	F	G	H	J
59.19 in	24.69 in	22.75 in	22.69 in	25.25 in	32.94 in	32.63 in	34.06 in	--

The Product and Ratings Data in this program is subject to change at any time and without notice. Please refer to the latest product literature and the AHRI directory at www.ahridirectory.org for the most up-to-date information.

Certified Drawing For ID 1

Project: Climatec - City of Esc - Vineyard Golf Course
Prepared By: Shawn Harlan

04/12/2025

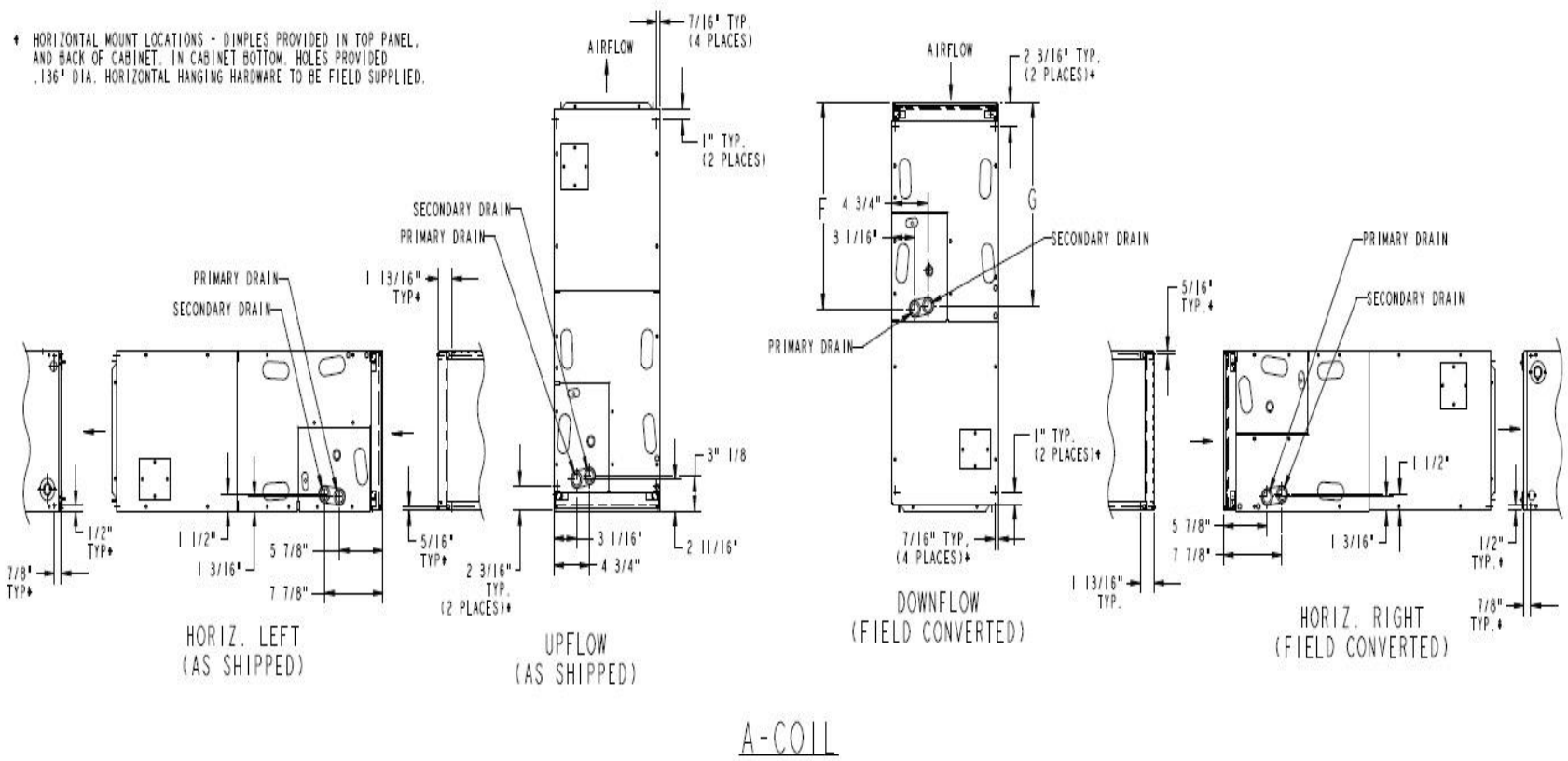

A-COIL

Indoor Coil

Unit Model:	**FT5A**	
Unit Size:	**60,000 Btuh**	
Voltage:	**208-1-60**	V-Ph-Hz
PartNumber:	**FT5ANBD60L00**	

The Product and Ratings Data in this program is subject to change at any time and without notice. Please refer to the latest product literature and the AHRI directory at www.ahridirectory.org for the most up-to-date information.

Outdoor Unit Heat Pump Ductless System

Outdoor Model: **37MARAQ12AA3**

Turn to the experts

Job Data: _____ **Location:** _____

Tag #: _____ **Carrier#:** _____

Date: _____

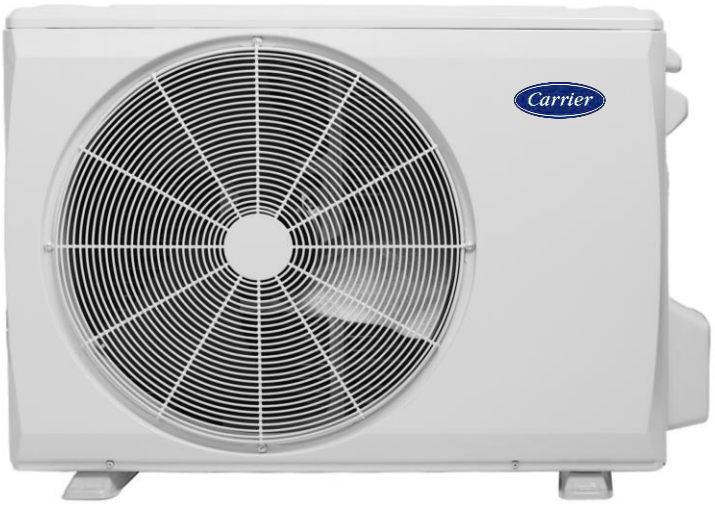

OUTDOOR STANDARD FEATURES
- Variable Speed (Inverter)
- Factory installed Base Pan Heater
- Factory installed Crankcase Heater
- Low Voltage Controls
- Auto-Restart function
- Condenser High Temp Protection
- Quiet operation
- Anti-corrosive fin coating

RESIDENTIAL APPLICATION LIMITED WARRANTY*
- Ten (10) years if properly registered within ninety (90) days after original installation, parts are warranted to the original purchaser for a period of ten (10) years. Otherwise, parts warranty is five (5) years.

NOTE: Images for illustration purposes only. Actual models may be slightly different.

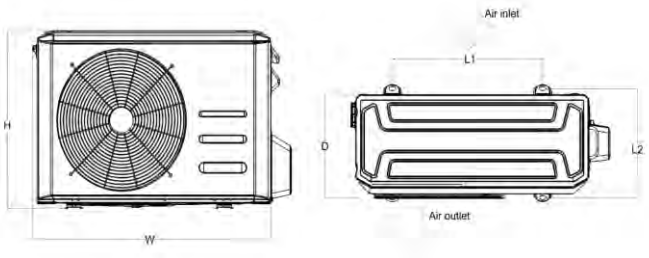

OUTDOOR UNIT DIMENSIONS						
Capacity	**Unit**	**W**	**D**	**H**	**L1**	**L2**
9K/12K	mm	765	303	555	452.4	313.82
	inch	30.12	11.93	21.85	17.81	12.36
18K	mm	890	342	673	663	379.59
	inch	35.04	13.46	26.5	26.1	14.94
24K ~ 36K	mm	946	410	810	672.96	454.8
	inch	37.24	16.14	31.89	26.49	17.19

Outdoor - Heat Pump			
System	**Outdoor Model #**		37MARAQ12AA3
	Outdoor Size		12000
Electrical	Voltage, Phase, Cycle	V/Ph/Hz	208-230/1/60
	MCA	A.	12
	MOPA	A.	15
	SCCR	kA	5
Operating Range	Cooling Outdoor DB Min - Max	°F(°C)	-13~122(-25～50)
	Heating Outdoor DB Min - Max	°F(°C)	-13~75(-25～24)
Piping	Min. Piping Length	ft (m)	9.8 (3)
	Standard Piping Length	ft. (m)	24.6 (7.5)
	Total Piping Length	ft (m)	82.02(25)
	Piping Lift*	ft (m)	49.21(15)
	Pipe Connection Size - Liquid	in (mm)	1/4in(6.35mm)
	Pipe Connection Size - Suction	in (mm)	3/8in(9.52mm)
Refrigerant	Refrigerant Type		R454B
	Charge	lbs (kg)	2.03(0.92)
	Add'l Refrigerant (between Std & Max Piping Lengths)	Oz/ft (g/m)	0.16(15)
Outdoor Coil	Face Area	Sq. Ft.	4.04
	No. Rows		2
	Fins per inch		20
	Circuits		4
Compressor	Type		ROTARY
	Model		KSK103D33UEZ3
	Oil Type		ESTER OIL
	Oil Charge	Fl. Oz.	10.48
	Rated Current	RLA	0.62
Airflow & Sound	Airflow	CFM	1236.7
	Sound Pressure	dB(A)	56
Dimensions	Height	in (mm)	21.85(555)
	Width	in (mm)	30.12(765)
	Depth	in (mm)	11.93(303)
	Net Weight	lbs (kg)	62.17(28.2)
	Shipping Height	in (mm)	24.02(610)
	Shipping Width	in (mm)	34.92(887)
	Shipping Depth	in (mm)	13.27(337)
	Shipping Net Weight	lbs (kg)	67.68(30.7)

*** Condensing unit above or below indoor unit**

AHRI CERTIFIED www.ahridirectory.org Unitary Small HP AHRI Standard 210/240

Puron Advance™

Carrier Corporation Copyright 2024 • Atlanta, GA, 30339
SUBJECT TO CHANGE WITHOUT NOTICE

Outdoor Unit Heat Pump Ductless System

Outdoor Model: **37MARAQ18AA3**

Turn to the experts

Job Data: _____ **Location:** _____

Tag #: _____ **Carrier#:** _____

Date: _____

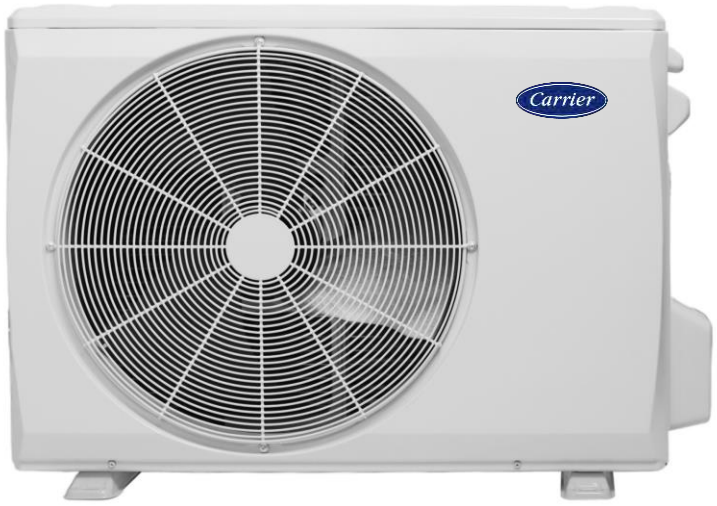

OUTDOOR STANDARD FEATURES
- Variable Speed (Inverter)
- Factory installed Base Pan Heater
- Factory installed Crankcase Heater
- Low Voltage Controls
- Auto-Restart function
- Condenser High Temp Protection
- Quiet operation
- Anti-corrosive fin coating

RESIDENTIAL APPLICATION LIMITED WARRANTY*
- Ten (10) years if properly registered within ninety (90) days after original installation, parts are warranted to the original purchaser for a period of ten (10) years. Otherwise, parts warranty is five (5) years.

NOTE: Images for illustration purposes only. Actual models may be slightly different.

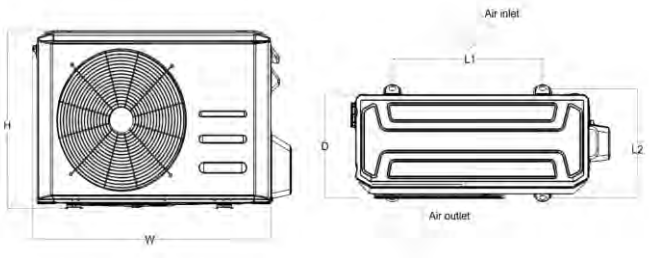

OUTDOOR UNIT DIMENSIONS						
Capacity	**Unit**	**W**	**D**	**H**	**L1**	**L2**
9K/12K	mm	765	303	555	452.4	313.82
	inch	30.12	11.93	21.85	17.81	12.36
18K	mm	890	342	673	663	379.59
	inch	35.04	13.46	26.5	26.1	14.94
24K ~ 36K	mm	946	410	810	672.96	454.8
	inch	37.24	16.14	31.89	26.49	17.19

Outdoor - Heat Pump			
System	**Outdoor Model #**		37MARAQ18AA3
	Outdoor Size		18000
Electrical	Voltage, Phase, Cycle	V/Ph/Hz	208-230/1/60
	MCA	A.	18
	MOPA	A.	20
	SCCR	kA	5
Operating Range	Cooling Outdoor DB Min - Max	°F(°C)	-13~122(-25～50)
	Heating Outdoor DB Min - Max	°F(°C)	-13~75(-25～24)
Piping	Min. Piping Length	ft (m)	9.8 (3)
	Standard Piping Length	ft. (m)	24.6 (7.5)
	Total Piping Length	ft (m)	98.42(30)
	Piping Lift*	ft (m)	65.62(20)
	Pipe Connection Size - Liquid	in (mm)	1/4in(6.35mm)
	Pipe Connection Size - Suction	in (mm)	1/2in(12.7mm)
Refrigerant	Refrigerant Type		R454B
	Charge	lbs (kg)	3(1.36)
	Add'l Refrigerant (between Std & Max Piping Lengths)	Oz/ft (g/m)	0.16(15)
Outdoor Coil	Face Area	Sq. Ft.	5.9
	No. Rows		2
	Fins per inch		20
	Circuits		6
Compressor	Type		ROTARY
	Model		KSN140D58UFZ
	Oil Type		ESTER OIL
	Oil Charge	Fl. Oz.	14.88
	Rated Current	RLA	0.82
Airflow & Sound	Airflow	CFM	1766.8
	Sound Pressure	dB(A)	58
Dimensions	Height	in (mm)	26.5(673)
	Width	in (mm)	35.04(890)
	Depth	in (mm)	13.46(342)
	Net Weight	lbs (kg)	92.59(42)
	Shipping Height	in (mm)	29.13(740)
	Shipping Width	in (mm)	39.17(995)
	Shipping Depth	in (mm)	15.67(398)
	Shipping Net Weight	lbs (kg)	100.31(45.5)

*** Condensing unit above or below indoor unit**

AHRI CERTIFIED www.ahridirectory.org Unitary Small HP AHRI Standard 210/240

Puron Advance™

Carrier Corporation Copyright 2024 • Atlanta, GA, 30339
SUBJECT TO CHANGE WITHOUT NOTICE

Outdoor Unit Heat Pump Ductless System

Outdoor Model: **37MARAQ24AA3**

Turn to the experts

Job Data: _____ **Location:** _____

Tag #: _____ **Carrier#:** _____

Date: _____

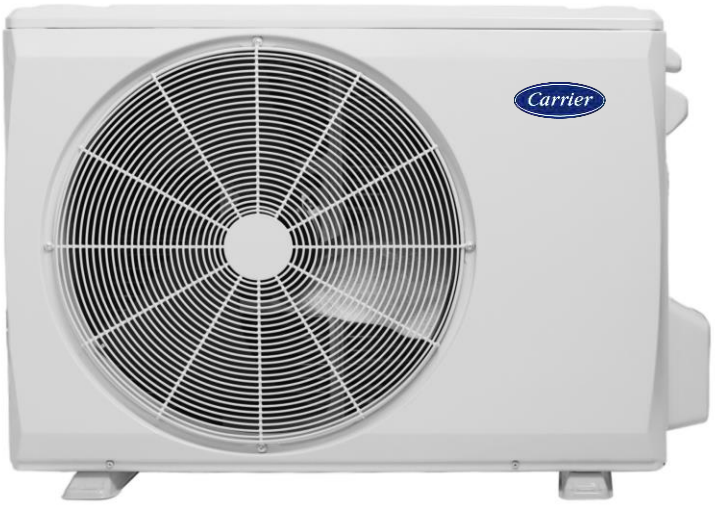

OUTDOOR STANDARD FEATURES
- Variable Speed (Inverter)
- Factory installed Base Pan Heater
- Factory installed Crankcase Heater
- Low Voltage Controls
- Auto-Restart function
- Condenser High Temp Protection
- Quiet operation
- Anti-corrosive fin coating

RESIDENTIAL APPLICATION LIMITED WARRANTY*
- Ten (10) years if properly registered within ninety (90) days after original installation, parts are warranted to the original purchaser for a period of ten (10) years. Otherwise, parts warranty is five (5) years.

NOTE: Images for illustration purposes only. Actual models may be slightly different.

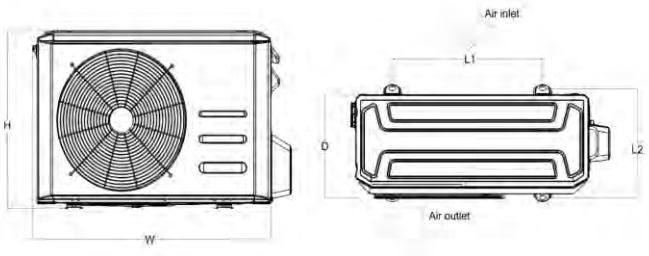

OUTDOOR UNIT DIMENSIONS						
Capacity	**Unit**	**W**	**D**	**H**	**L1**	**L2**
9K/12K	mm	765	303	555	452.4	313.82
	inch	30.12	11.93	21.85	17.81	12.36
18K	mm	890	342	673	663	379.59
	inch	35.04	13.46	26.5	26.1	14.94
24K ~ 36K	mm	946	410	810	672.96	454.8
	inch	37.24	16.14	31.89	26.49	17.19

Outdoor - Heat Pump			
System	**Outdoor Model #**		37MARAQ24AA3
	Outdoor Size		24000
Electrical	Voltage, Phase, Cycle	V/Ph/Hz	208-230/1/60
	MCA	A.	24
	MOPA	A.	25
	SCCR	kA	5
Operating Range	Cooling Outdoor DB Min - Max	°F(°C)	-13~122(-25～50)
	Heating Outdoor DB Min - Max	°F(°C)	-13~75(-25～24)
Piping	Min. Piping Length	ft (m)	9.8 (3)
	Standard Piping Length	ft. (m)	24.6 (7.5)
	Total Piping Length	ft (m)	164.04(50)
	Piping Lift*	ft (m)	82.02(25)
	Pipe Connection Size - Liquid	in (mm)	3/8in(9.52mm)
	Pipe Connection Size - Suction	in (mm)	5/8in(15.9mm)
Refrigerant	Refrigerant Type		R454B
	Charge	lbs (kg)	4.41(2.0)
	Add'l Refrigerant (between Std & Max Piping Lengths)	Oz/ft (g/m)	0.32(30)
Outdoor Coil	Face Area	Sq. Ft.	8.18
	No. Rows		2.6
	Fins per inch		20
	Circuits		6
Compressor	Type		ROTARY
	Model		KTM240D46UKT2
	Oil Type		ESTER OIL
	Oil Charge	Fl. Oz.	20.97
	Rated Current	RLA	1.05
Airflow & Sound	Airflow	CFM	2237.9
	Sound Pressure	dB(A)	58
Dimensions	Height	in (mm)	31.89(810)
	Width	in (mm)	37.24(946)
	Depth	in (mm)	16.14(410)
	Net Weight	lbs (kg)	122.14(55.4)
	Shipping Height	in (mm)	34.84(885)
	Shipping Width	in (mm)	42.91(1090)
	Shipping Depth	in (mm)	19.68(500)
	Shipping Net Weight	lbs (kg)	132.28(60)

*** Condensing unit above or below indoor unit**

Carrier Corporation Copyright 2024 • Atlanta, GA, 30339
SUBJECT TO CHANGE WITHOUT NOTICE

AHRI CERTIFIED www.ahridirectory.org Unitary Small HP AHRI Standard 210/240

Puron Advance™

High Wall Heat Pump Ductless System

Indoor Model: 45MAHAQ12XA3

Turn to the experts

Job Data: _____ **Location:** _____

Tag #: _____ **Carrier#:** _____

Date: _____

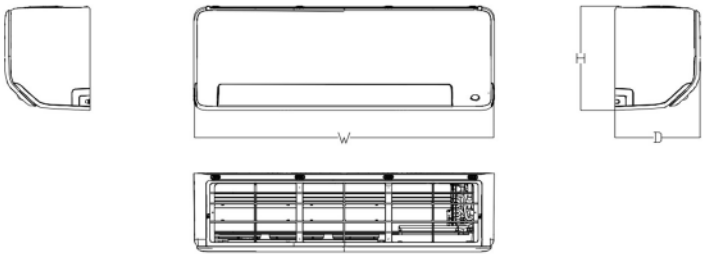

INDOOR STANDARD FEATURES

- Modes: Cool, Heat, Dry, Fan, Auto
- Four fan speeds
- Sleep Mode
- Turbo Mode
- Follow Me (senses temperature at handheld remote)
- Auto-Restart function
- Quiet indoor operation
- Anti-corrosive fin coating

RESIDENTIAL APPLICATION LIMITED WARRANTY*

- Ten (10) years if properly registered within ninety (90) days after original installation, parts are warranted to the original purchaser for a period of ten (10) years. Otherwise, parts warranty is five (5) years.

NOTE: Images for illustration purposes only. Actual models may be slightly different.

INDOOR UNIT DIMENSIONS				
Capacity	Unit	W	D	H
6K/9K/12K	mm	795	225	295
	inch	31.3	8.86	11.61
18K	mm	965	239	319
	inch	37.99	9.41	12.56
24K ~ 36K	mm	1140	275	370
	inch	44.88	10.83	14.57

45MAHAQ12XA3			
System	Indoor Model #		45MAHAQ12XA3
	Indoor Size		12000
Electrical	Voltage, Phase, Cycle	V/Ph/Hz	208/230-1-60
	Power Supply	Indoor unit powered by outdoor unit	
	MCA	A.	3
Operating Range	Cooling Indoor DB Min - Max	°F(°C)	60~90(16～32)
	Heating Indoor DB Min - Max	°F(°C)	32~86(0～30)
Indoor Coil	Face Area	Sq. Ft.	2.15
	No. Rows		2
	Fins per inch		20
	Circuits		3
Indoor Unit	Number of Fan Speeds		1100/850/700
	Airflow (highest to lowest)	CFM	441.4 / 323.7 / 229.6 / 176.6 / 147.2
	Sound Pressure (highest to lowest)	dB(A)	47/36.5/32.5/22/19.5
	Moisture Removal	L/h	1.2
	Air Throw Data	ft(m)	23.62(7.2)
Dimensions	Height	in (mm)	11.61(295)
	Width	in (mm)	31.30(795)
	Depth	in (mm)	8.86(225)
	Net Weight	lbs (kg)	22.93(10.4)
	Shipping Height	in (mm)	12.01(305)
	Shipping Width	in (mm)	34.25(870)
	Shipping Depth	in (mm)	14.57(370)
	Shipping Net Weight	lbs (kg)	29.32(13.3)
CONTROLS			
Standard	Wireless Remote Controller (°F/°C Convertible)		
Optional	Wired Remote Control 7 Day Programmable		KSACN1401AAA
	Wired Remote Control with Timer Function		KSACN1201AAA
	Wi-Fi™ Kit High Wall		KSAIF0701AAA
	24V Mini Interface		KSAIC0601230

Carrier Corporation Copyright 2024 • Atlanta, GA, 30339
SUBJECT TO CHANGE WITHOUT NOTICE

Puron Advance™

High Wall Heat Pump Ductless System

Indoor Model: 45MAHAQ18XA3

Turn to the experts

Job Data: _____ **Location:** _____

Tag #: _____ **Carrier#:** _____

Date: _____

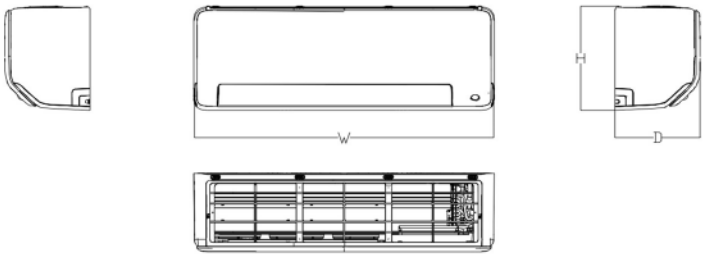

INDOOR STANDARD FEATURES
- Modes: Cool, Heat, Dry, Fan, Auto
- Four fan speeds
- Sleep Mode
- Turbo Mode
- Follow Me (senses temperature at handheld remote)
- Auto-Restart function
- Quiet indoor operation
- Anti-corrosive fin coating

RESIDENTIAL APPLICATION LIMITED WARRANTY*
- Ten (10) years if properly registered within ninety (90) days after original installation, parts are warranted to the original purchaser for a period of ten (10) years. Otherwise, parts warranty is five (5) years.

NOTE: Images for illustration purposes only. Actual models may be slightly different.

INDOOR UNIT DIMENSIONS				
Capacity	Unit	W	D	H
6K/9K/12K	mm	795	225	295
	inch	31.3	8.86	11.61
18K	mm	965	239	319
	inch	37.99	9.41	12.56
24K ~ 36K	mm	1140	275	370
	inch	44.88	10.83	14.57

45MAHAQ18XA3			
System	Indoor Model #		45MAHAQ18XA3
	Indoor Size		18000
Electrical	Voltage, Phase, Cycle	V/Ph/Hz	208/230-1-60
	Power Supply		Indoor unit powered by outdoor unit
	MCA	A.	3
Operating Range	Cooling Indoor DB Min - Max	°F(°C)	60~90(16～32)
	Heating Indoor DB Min - Max	°F(°C)	32~86(0～30)
Indoor Coil	Face Area	Sq. Ft.	2.75
	No. Rows		2
	Fins per inch		20
	Circuits		4
Indoor Unit	Number of Fan Speeds		1190/994/896
	Airflow (highest to lowest)	CFM	635.7 / 500.3 / 359.0 / 294.3 / /
	Sound Pressure (highest to lowest)	dB(A)	49.5/45.0/38.0/31.5/19.5
	Moisture Removal	L/h	2.2
	Air Throw Data	ft(m)	26.57(8.1)
Dimensions	Height	in (mm)	12.56(319)
	Width	in (mm)	37.99(965)
	Depth	in (mm)	9.41(239)
	Net Weight	lbs (kg)	27.34(12.4)
	Shipping Height	in (mm)	12.80(325)
	Shipping Width	in (mm)	41.14(1045)
	Shipping Depth	in (mm)	15.75(400)
	Shipping Net Weight	lbs (kg)	36.6(16.6)
CONTROLS			
Standard	Wireless Remote Controller (°F/°C Convertible)		
Optional	Wired Remote Control 7 Day Programmable		KSACN1401AAA
	Wired Remote Control with Timer Function		KSACN1201AAA
	Wi-Fi™ Kit High Wall		KSAIF0701AAA
	24V Mini Interface		KSAIC0601230

Carrier Corporation Copyright 2024 • Atlanta, GA, 30339
SUBJECT TO CHANGE WITHOUT NOTICE

Puron Advance™

High Wall Heat Pump Ductless System

Indoor Model: 45MAHAQ24XA3

Turn to the experts

Job Data: _____ **Location:** _____

Tag #: _____ **Carrier#:** _____

Date: _____

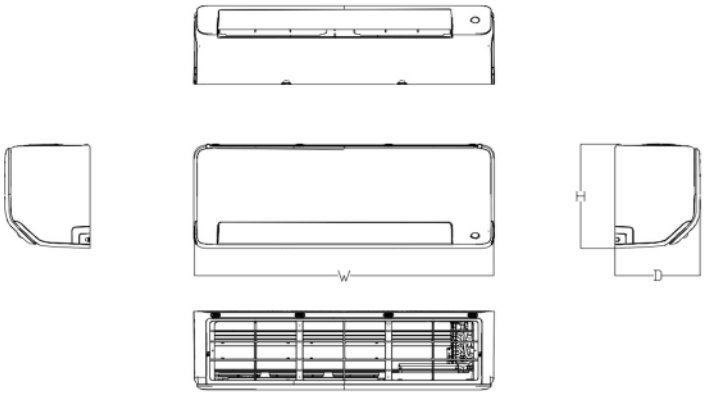

INDOOR STANDARD FEATURES

- Modes: Cool, Heat, Dry, Fan, Auto
- Four fan speeds
- Sleep Mode
- Turbo Mode
- Follow Me (senses temperature at handheld remote)
- Auto-Restart function
- Quiet indoor operation
- Anti-corrosive fin coating

RESIDENTIAL APPLICATION LIMITED WARRANTY*

- Ten (10) years if properly registered within ninety (90) days after original installation, parts are warranted to the original purchaser for a period of ten (10) years. Otherwise, parts warranty is five (5) years.

NOTE: Images for illustration purposes only. Actual models may be slightly different.

INDOOR UNIT DIMENSIONS				
Capacity	Unit	W	D	H
6K/9K/12K	mm	795	225	295
	inch	31.3	8.86	11.61
18K	mm	965	239	319
	inch	37.99	9.41	12.56
24K ~ 36K	mm	1140	275	370
	inch	44.88	10.83	14.57

45MAHAQ24XA3			
System	Indoor Model #		45MAHAQ24XA3
	Indoor Size		24000
Electrical	Voltage, Phase, Cycle	V/Ph/Hz	208/230-1-60
	Power Supply	Indoor unit powered by outdoor unit	
	MCA	A.	3
Operating Range	Cooling Indoor DB Min - Max	°F(°C)	60~90(16～32)
	Heating Indoor DB Min - Max	°F(°C)	32~86(0～30)
Indoor Coil	Face Area	Sq. Ft.	3.6
	No. Rows		3
	Fins per inch		20
	Circuits		7
Indoor Unit	Number of Fan Speeds		1000/850/630
	Airflow (highest to lowest)	CFM	812.3 / 618.0 / 412.0 / 317.8 / /
	Sound Pressure (highest to lowest)	dB(A)	54.5/43.5/38.5/27/16
	Moisture Removal	L/h	2.7
	Air Throw Data	ft(m)	30.1(9.18)
Dimensions	Height	in (mm)	14.57(370)
	Width	in (mm)	44.88(1140)
	Depth	in (mm)	10.83(275)
	Net Weight	lbs (kg)	43.65(19.8)
	Shipping Height	in (mm)	13.98(355)
	Shipping Width	in (mm)	48.43(1230)
	Shipping Depth	in (mm)	17.91(455)
	Shipping Net Weight	lbs (kg)	55.56(25.2)
CONTROLS			
Standard	Wireless Remote Controller (°F/°C Convertible)		
Optional	Wired Remote Control 7 Day Programmable		KSACN1401AAA
	Wired Remote Control with Timer Function		KSACN1201AAA
	Wi-Fi™ Kit High Wall		KSAIF0701AAA
	24V Mini Interface		KSAIC0601230

Carrier Corporation Copyright 2024 • Atlanta, GA, 30339
SUBJECT TO CHANGE WITHOUT NOTICE

Puron Advance™

SUBMITTAL

Project

Climatec - City of Esc - Water Treatment Plant

Date

Saturday, April 12, 2025

Shawn Harlan
Sigler - Brea
205 Puente Street
Brea CA

Table Of Contents

Project: Climatec - City of Esc - Water Treatment Plant 04/12/2025
Prepared By: Shawn Harlan 11:49AM

ID 1 **3**
Unit Report 4
Certified Drawing 5
Performance Summary 8
ID 6 **11**
Unit Report 12
Certified Drawing 13
Performance Summary 16

ID 1

Tag Cover Sheet
Unit Report
Certified Drawing
Performance Report

Unit Report For ID 1

Project: Climatec - City of Esc - Water Treatment Plant 04/12/2025
Prepared By: Shawn Harlan 11:49AM

Unit Parameters

Unit Model: **50FEQM12A2Q6-0A0A0**
Unit Size: **12 (10 Tons)**
Volts-Phase-Hertz: **460-3-60**
Heating Type: **Heat Pump**
Refrigerant: **R-454B**
Heat Control: **Two-Stage Cooling, Single Circuit**
Duct Cfg: **Vertical Supply / Vertical Return**

Dimensions (ft. in.) & Weight (lb.) ***

Unit Length: **7' 4.125"**
Unit Width: **4' 11.5"**
Unit Height: **4' 1.375"**
Total Operating Weight: **971** lb

*** Weights and Dimensions are approximate. Weight does not include unit packaging. Approximate dimensions are provided primarily for shipping purposes. For exact dimensions and weights, refer to appropriate product data catalog.

Lines and Filters

Return Air Filter Type: **Throwaway**
Return Air Filter Quantity: **4**
Return Air Filter Size: **20 x 20 x 2**

Selection includes construction throwaway filter into the base fan curve.

Unit Configuration

Standard/Medium Static - EcoBlue Vane Axial Fan
E-coat Al/Cu - E-coat Al/Cu - Louvered Hail Guards
Standard Electromechanical Controls (can be used with field installed economizers and dampers)
Standard

Warranty Information

1-Year parts (STD.)
5-Year Compressor (std.)

No optional warranties were selected.

NOTE: Please see Warranty Catalog 500-089 for explanation of policies and ordering methods.

Ordering Information

Part Number	Description	Quantity
50FEQM12A2Q6-0A0A0	Rooftop Unit	1

Certified Drawing for ID 1

Project: Climatec - City of Esc - Water Treatment Plant
Prepared By: Shawn Harlan

04/12/2025
11:49AM

NOTES:

1. DIMENSIONS ARE IN INCHES. DIMENSIONS IN [ ] ARE IN MILLIMETERS.
2. CENTER OF GRAVITY
3. DIRECTION OF AIR FLOW
4. ALL VIEW DRAWN USING 3RD ANGLE

UNIT	OUTDOOR COIL TYPE	H
50FEQ-12	RTPF	15 7/8 [403]
RTPF - ROUND TUBE, PLATE FIN (COPPER/ALUM)		

Carrier
THIS DOCUMENT IS THE PROPERTY OF CARRIER CORPORATION AND IS DELIVERED UPON THE EXPRESS CONDITION THAT THE CONTENTS WILL NOT BE DISCLOSED OR USED WITHOUT CARRIER CORPORATION'S WRITTEN CONSENT.
SUBMISSION OF THESE DRAWINGS OR DOCUMENTS DOES NOT CONSTITUTE PART PERFORMANCE OR ACCEPTANCE OF CONTRACT.

	CONNECTION SIZES
A	1 3/8" [35] DIA FIELD POWER SUPPLY HOLE
B	2 1/2" [64] DIA POWER SUPPLY KNOCKOUT
C	1 3/4" [51] DIA GAUGE ACCESS PLUG
D	7/8" [22] DIA FIELD CONTROL WIRING HOLE
E	3/4"-14 NPT CONDENSATE DRAIN
G	2" [51] DIA POWER SUPPLY KNOCK-OUT

THRU-THE-BASE CHART
THESE HOLES REQUIRED FOR USE CRBTMPWR002A01

	THREADED CONDUIT SIZE	WIRE USE	REQ'D HOLE SIZES (MAX.)
W	1/2"	ACC.	7/8" [22.2]
X	1/2"	24V	7/8" [22.2]
Y	1 1/4" (002)	POWER	1 3/4" [44.4]
	FOR "THRU-THE-BASEPAN" FACTORY OPTION, FITTINGS FOR ONLY X & Y ARE PROVIDED		

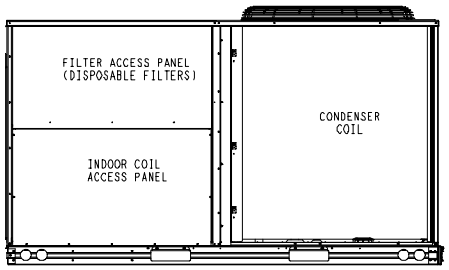

BACK

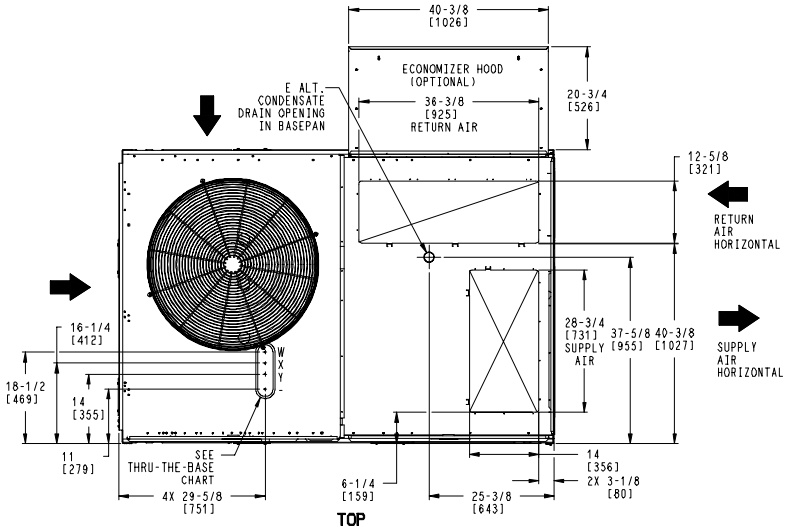

TOP

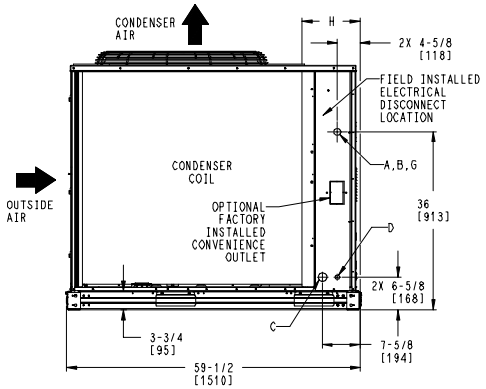

LEFT

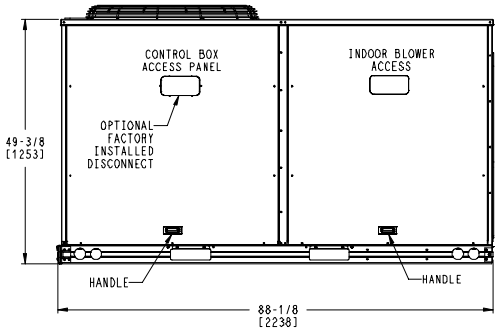

FRONT

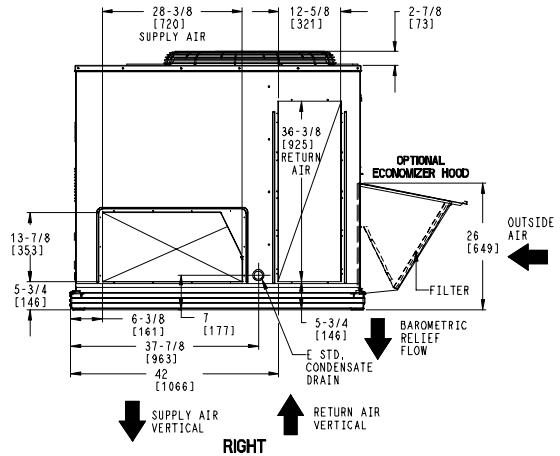

RIGHT

ITC CLASSIFICATION	SHEET	DATE	SUPERCEDES			REV
U.S. ECCN:NSR	1 OF 3	02/20/24	-	50FEQ 12 SINGLE ZONE ELECTRICAL HEAT PUMP	48TM009810	-

UNIT	OUTDOOR COIL TYPE	STD. UNIT WEIGHT***		CORNER WEIGHT (A)		CORNER WEIGHT (B)		CORNER WEIGHT (C)		CORNER WEIGHT (D)		C.G.		
		LBS.	KG.	LBS.	KG.	LBS.	KG.	LBS.	KG.	LBS.	KG.	X	Y	Z
50FEQ-12	RTPF	955	433	239	108	194	88	234	106	288	131	39 1/2 [1003]	32 1/2 [826]	19 1/8 [486]
RTPF - ROUND TUBE, PLATE FIN (COPPER/ALUM)														

*** STANDARD UNIT WEIGHT IS WITHOUT ELECTRIC HEAT AND WITHOUT PACKAGING.
FOR OTHER OPTIONS AND ACCESSORIES, REFER TO THE PRODUCT DATA CATALOG.

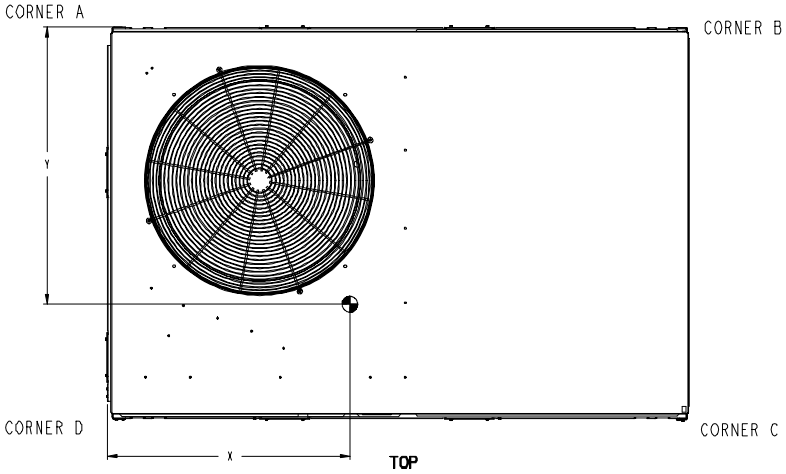

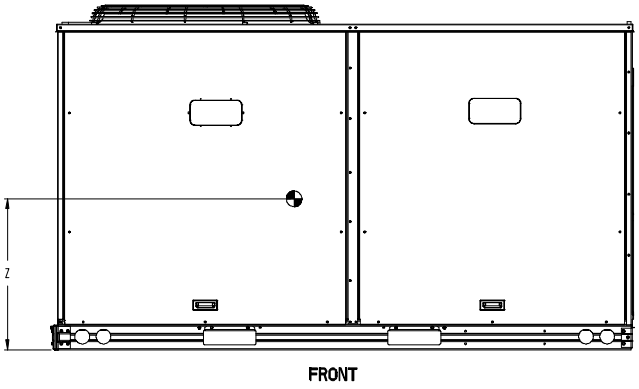

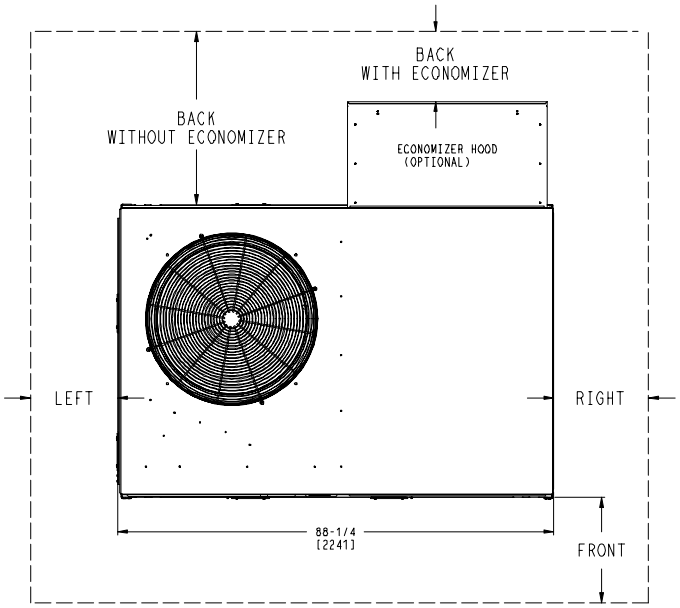

Carrier

THIS DOCUMENT IS THE PROPERTY OF CARRIER CORPORATION AND IS DELIVERED UPON THE EXPRESS CONDITION THAT THE CONTENTS WILL NOT BE DISCLOSED OR USED WITHOUT CARRIER CORPORATION'S WRITTEN CONSENT.

SUBMISSION OF THESE DRAWINGS OR DOCUMENTS DOES NOT CONSTITUTE PART PERFORMANCE OR ACCEPTANCE OF CONTRACT.

NOTE:

1. FOR ALL MINIMUM CLEARANCES LOCAL CODES OR JURISDICTIONS MAY PREVAIL.

	CLEARANCE	
	SERVICE WITH:	SERVICE WITH:
SURFACE	CONDUCTIVE BARRIER	NONCONDUCTIVE BARRIER
FRONT	48 [1219mm]	36 [914mm]
LEFT	48 [1219mm]	42 [1067mm]
BACK W/O ECON	48 [1219mm]	42 [1067mm]
BACK W/ECON	36 [914mm]	36 [914mm]
RIGHT	36 [914mm]	36 [914mm]
TOP	72 [1829mm]	72 [1829mm]

ITC CLASSIFICATION	SHEET	DATE	SUPERCEDES			REV
U.S. ECCN:NSR	2 OF 3	02/20/24	-	50FEQ 12 SINGLE ZONE ELECTRICAL HEAT PUMP	48TM009810	-

Certified Drawing for ID 1

Project: Climatec - City of Esc - Water Treatment Plant
Prepared By: Shawn Harlan

04/12/2025
11:49AM

Carrier
THIS DOCUMENT IS THE PROPERTY OF CARRIER CORPORATION AND IS DELIVERED UPON THE EXPRESS CONDITION THAT THE CONTENTS WILL NOT BE DISCLOSED OR USED WITHOUT CARRIER CORPORATION'S WRITTEN CONSENT.
SUBMISSION OF THESE DRAWINGS OR DOCUMENTS DOES NOT CONSTITUTE PART PERFORMANCE OR ACCEPTANCE OF CONTRACT.

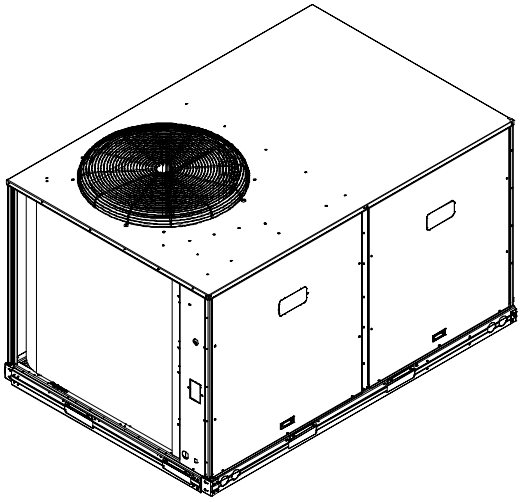

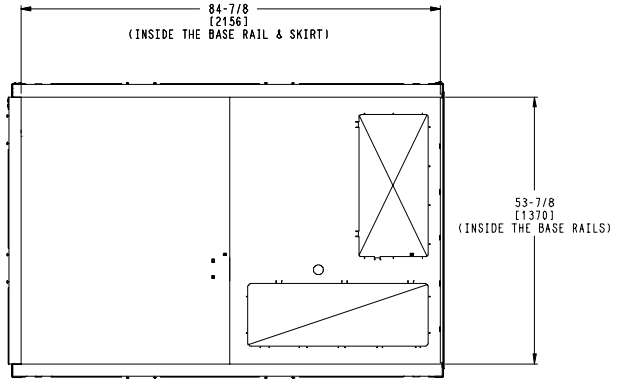

INSIDE BASERAIL DIMENSIONS
BOTTOM

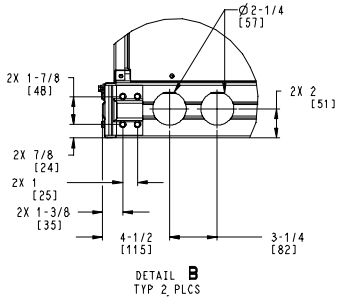

DETAIL **B**
TYP 2 PLCS

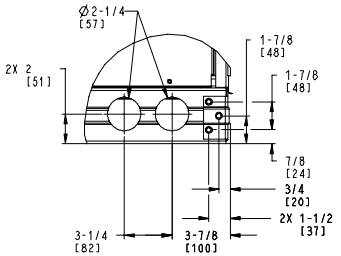

DETAIL **C**
TYP 2 PLCS

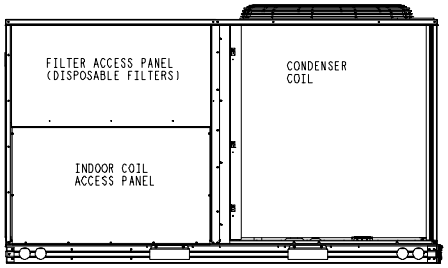

BACK

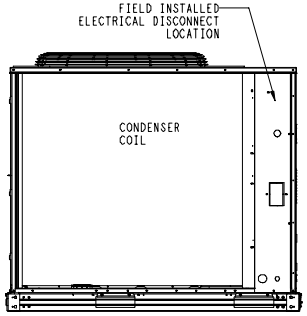

LEFT

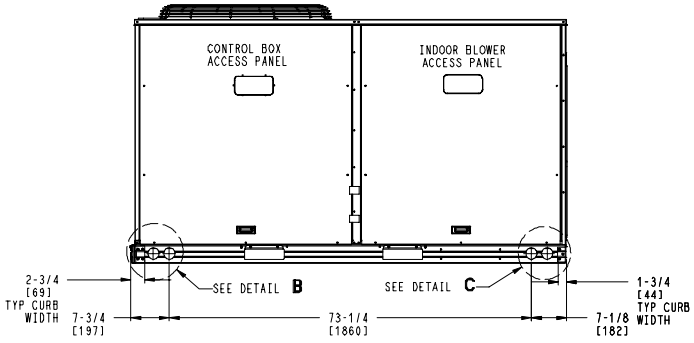

FRONT

ITC CLASSIFICATION	SHEET	DATE	SUPERCEDES			REV
U.S. ECCN:NSR	3 OF 3	02/20/24	-	50FEQ 12 SINGLE ZONE ELECTRICAL HEAT PUMP	48TM009810	-

Performance Summary For ID 1

Project: Climatec - City of Esc - Water Treatment Plant 04/12/2025
Prepared By: Shawn Harlan 11:49AM

Part Number:50FEQM12A2Q6-0A0A0

Refrigerant:	**R-454B**	
ARI EER:	**11.00**	
Application EER (Rooftop Unit only):	**10.70**	
IEER:	**15.0**	

Base Unit Dimensions

Unit Length:	**88.1**	in
Unit Width:	**59.5**	in
Unit Height:	**49.4**	in

Operating Weight

Base Unit Weight:	**955**	lb
E-coat Al/Cu - E-coat Al/Cu - Louvered Hail Guards:	**16**	lb
Total Operating Weight:	**971**	lb

Unit

Unit Voltage-Phase-Hertz:	**460-3-60**	
Air Discharge:	**Vertical**	
Fan Drive Type:	**Vane Axial**	
Actual Airflow:	**4000**	CFM
Site Altitude:	**0**	ft

Cooling Performance

Condenser Entering Air DB:	**95.0**	F
Evaporator Entering Air DB:	**80.0**	F
Evaporator Entering Air WB:	**67.0**	F
Entering Air Enthalpy:	**31.44**	BTU/lb
Evaporator Leaving Air DB:	**57.6**	F
Evaporator Leaving Air WB:	**56.9**	F
Evaporator Leaving Air Enthalpy:	**24.35**	BTU/lb
Unit Discharge Air DB:	**59.0**	F
Unit Discharge Air WB:	**57.5**	F
Unit Discharge Air Enthalpy:	**24.68**	BTU/lb
Gross Cooling Capacity:	**127.67**	MBH
Net Cooling Capacity:	**121.65**	MBH
Gross Sensible Capacity:	**96.60**	MBH
Net Sensible Capacity:	**90.58**	MBH
Compressor Power Input:	**9.01**	kW
Coil Bypass Factor:	**0.041**	

Heating Performance

Outdoor Ambient Temperature:	**47.0**	F
Entering Air Indoor Coil DB:	**70.0**	F
Leaving Air Indoor Coil DB:	**96.4**	F
Total Heating Capacity:	**113.90**	MBH
Integrated Heating Capacity:	**113.90**	MBH
Heating Power Input:	**9.40**	kW
High Temperature COP:	**3.40**	
Low Temperature COP:	**2.25**	

Supply Fan

External Static Pressure:	**1.00**	in wg
Fan RPM:	**1812**	
Fan Power:	**2.07**	BHP
NOTE:	**Selected IFM RPM Range: 1181 - 2000**	

Selection includes construction throwaway filter into the base fan curve. This filter is not MERV Rated.

Electrical Data

Performance Summary For ID 1

Project: Climatec - City of Esc - Water Treatment Plant
Prepared By: Shawn Harlan

04/12/2025
11:49AM

Voltage Range: **414 - 506**
Compressor #1 RLA: **8.3**
Compressor #1 LRA: **58**
Compressor #2 RLA: **8.3**
Compressor #2 LRA: **58**
Indoor Fan Motor Type: **MED**
Indoor Fan Motor FLA (Total): **3**
Power Supply MCA: **30**
Power Supply MOCP (Fuse or HACR): **35**
Disconnect Size FLA: **31**
Disconnect Size LRA: **127**
Electrical Convenience Outlet: **None**
Outdoor Fan [Qty / FLA (ea)]: **1 / 7.4**

Control Panel SCCR: 5kA RMS at Rated Symmetrical Voltage

Acoustics

Sound Power Levels, db re 10E-12 Watts

	Discharge	Inlet	Outdoor
63 Hz	94.0	56.6	88.1
125 Hz	88.5	83.1	90.0
250 Hz	83.5	76.6	85.9
500 Hz	81.3	73.4	83.0
1000 Hz	82.4	72.4	81.6
2000 Hz	79.4	67.8	78.5
4000 Hz	73.8	57.9	76.4
8000 Hz	65.4	50.0	75.5
A-Weighted	86.4	76.8	87.0

Advanced Acoustics

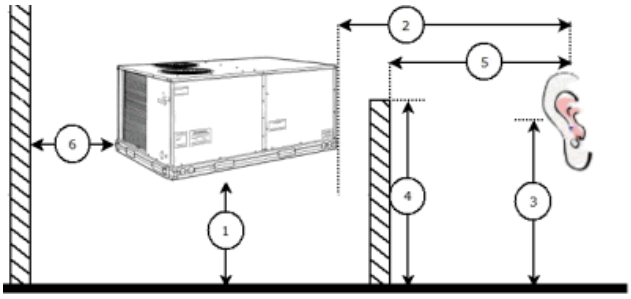

Advanced Accoustics Parameters

1. Unit height above ground: **30.0** ft
2. Horizontal distance from unit to receiver: **50.0** ft
3. Receiver height above ground: **5.7** ft
4. Height of obstruction: **0.0** ft
5. Horizontal distance from obstruction to receiver: **0.0** ft
6. Horizontal distance from unit to obstruction: **0.0** ft

Detailed Acoustics Information

Octave Band Center Freq. Hz	63	125	250	500	1k	2k	4k	8k	Overall
A	88.1	90.0	85.9	83.0	81.6	78.5	76.4	75.5	94.0 Lw

Performance Summary For ID 1

Project: Climatec - City of Esc - Water Treatment Plant
Prepared By: Shawn Harlan

04/12/2025
11:49AM

B	61.9	73.9	77.3	79.8	81.6	79.7	77.4	74.4	87.0 LwA
C	55.7	57.6	53.5	50.6	49.2	46.1	44.0	43.1	61.6 Lp
D	29.5	41.5	44.9	47.4	49.2	47.3	45.0	42.0	54.6 LpA

Legend
A Sound Power Levels at Unit's Acoustic Center, Lw
B A-Weighted Sound Power Levels at Unit's Acoustic Center, LwA
C Sound Pressure Levels at Specific Distance from Unit, Lp
D A-Weighted Sound Pressure Levels at Specific Distance from Unit, LpA

Calculation methods used in this program are patterned after the ASHRAE Guide; other ASHRAE Publications and the AHRI Acoustical Standards. While a very significant effort has been made to insure the technical accuracy of this program, it is assumed that the user is knowledgeable in the art of system sound estimation and is aware of the tolerances involved in real world acoustical estimation. This program makes certain assumptions as to the dominant sound sources and sound paths which may not always be appropriate to the real system being estimated. Because of this, no assurances can be offered that this software will always generate an accurate sound prediction from user supplied input data. If in doubt about the estimation of expected sound levels in a space, an Acoustical Engineer or a person with sound prediction expertise should be consulted.

Fan Curve

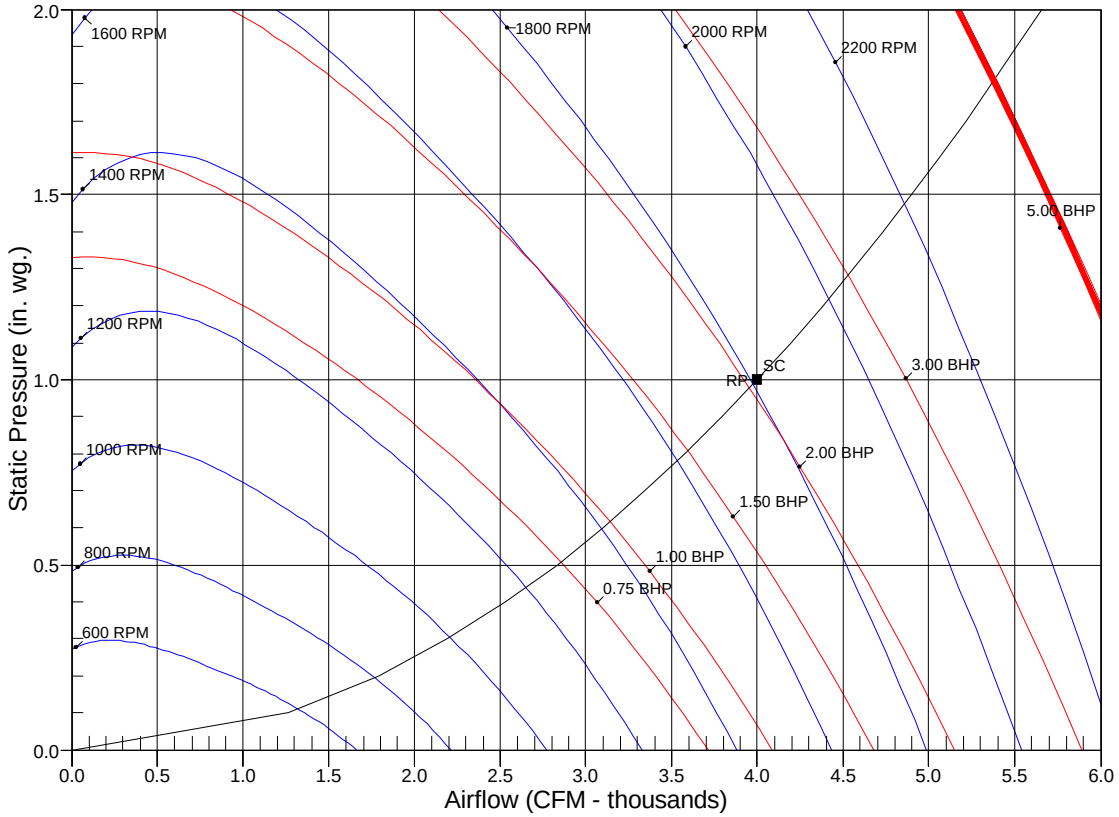

RPM = 1812 BHP = 2.07 Maximum RPM = 2200 Maximum BHP = 5.00
SC - System Curve RP - Rated Point

ID 6

Tag Cover Sheet
Unit Report
Certified Drawing
Performance Report

Unit Report For ID 6

Project: Climatec - City of Esc - Water Treatment Plant 04/12/2025
Prepared By: Shawn Harlan 11:49AM

Unit Parameters

Unit Model: **50GEQM05A2Q6-0A0A0**
Unit Size: **05 (4 Tons)**
Volts-Phase-Hertz: **460-3-60**
Heating Type: **Heat Pump**
Refrigerant: **R-454B**
Heat Control: **Two Stage Cooling, Single Circuit**
Duct Cfg: **Vertical Supply / Vertical Return**

Dimensions (ft. in.) & Weight (lb.) ***

Unit Length: **6' 2.375"**
Unit Width: **3' 10.625"**
Unit Height: **3' 5.375"**
Total Operating Weight: **607** lb

*** Weights and Dimensions are approximate. Weight does not include unit packaging. Approximate dimensions are provided primarily for shipping purposes. For exact dimensions and weights, refer to appropriate product data catalog.

Lines and Filters

Return Air Filter Type: **Throwaway**
Return Air Filter Quantity: **4**
Return Air Filter Size: **16 x 16 x 2**

Selection includes construction throwaway filter into the base fan curve.

Unit Configuration

Standard/Medium Static - EcoBlue Vane Axial Fan
E-coat Al/Cu - E-coat Al/Cu - Louvered Hail Guards
Standard Electromechanical Controls (can be used with field installed economizers and dampers)
Standard

Warranty Information

5-Year compressor parts (STD.)
1-Year parts (STD.)

No optional warranties were selected.

NOTE: Please see Warranty Catalog 500-089 for explanation of policies and ordering methods.

Ordering Information

Part Number	Description	Quantity
50GEQM05A2Q6-0A0A0	Rooftop Unit	1

Certified Drawing for ID 6

Project: Climatec - City of Esc - Water Treatment Plant
Prepared By: Shawn Harlan

04/12/2025
11:49AM

NOTES:

1. DIMENSIONS ARE IN INCHES, DIMENSIONS IN [ ] ARE IN MILLIMETERS.
2. CENTER OF GRAVITY
3. DIRECTION OF AIR FLOW
4. ALL VIEW DRAWN USING 3RD ANGLE

UNIT	J	K
50GEQ*04	33 3/8 [847]	18 5/8 [472]
50GEQ*05	41 3/8 [1051]	14 7/8 [378]
50GEQ*06	41 3/8 [1051]	14 7/8 [378]

Carrier

THIS DOCUMENT IS THE PROPERTY OF CARRIER CORPORATION AND IS DELIVERED UPON THE EXPRESS CONDITION THAT THE CONTENTS WILL NOT BE DISCLOSED OR USED WITHOUT CARRIER CORPORATION'S WRITTEN CONSENT.

SUBMISSION OF THESE DRAWINGS OR DOCUMENTS DOES NOT CONSTITUTE PART PERFORMANCE OR ACCEPTANCE OF CONTRACT.

	CONNECTION SIZES
A	1 3/8" [35] DIA FIELD POWER SUPPLY HOLE
B	2" [51] DIA POWER SUPPLY KNOCKOUT
C	1 3/4" [44] DIA GAUGE ACCESS PLUG
D	7/8" [22] DIA FIELD CONTROL WIRING HOLE
E	3/4"-14 NPT CONDENSATE DRAIN
G	2 1/2 " [64] DIA POWER SUPPLY KNOCK-OUT

THRU-THE-BASE CHART
THESE HOLES REQUIRED FOR USE CRBTMPWR008A00, 009A00

	THREADED CONDUIT SIZE	WIRE USE	REQ'D HOLE SIZES (MAX.)
W	1/2"	115V	7/8" [22.2]
X	1/2"	24V	7/8" [22.2]
Y *	3/4"	POWER	1 1/8" [28.6]
Z**	(009A00) 1/2" FPT	GAS	1 1/8" [28.6]
	FOR "THRU-THE-BASEPAN" FACTORY OPTION, FITTINGS FOR ONLY X,Y, & Z ARE PROVIDED		
*	SELECT EITHER 3/4" OR 1/2" FOR POWER, DEPENDING ON WIRE SIZE		
**	(008A00) PROVIDES 3/4" FPT THRU CURB FLANGE & FITTING.		

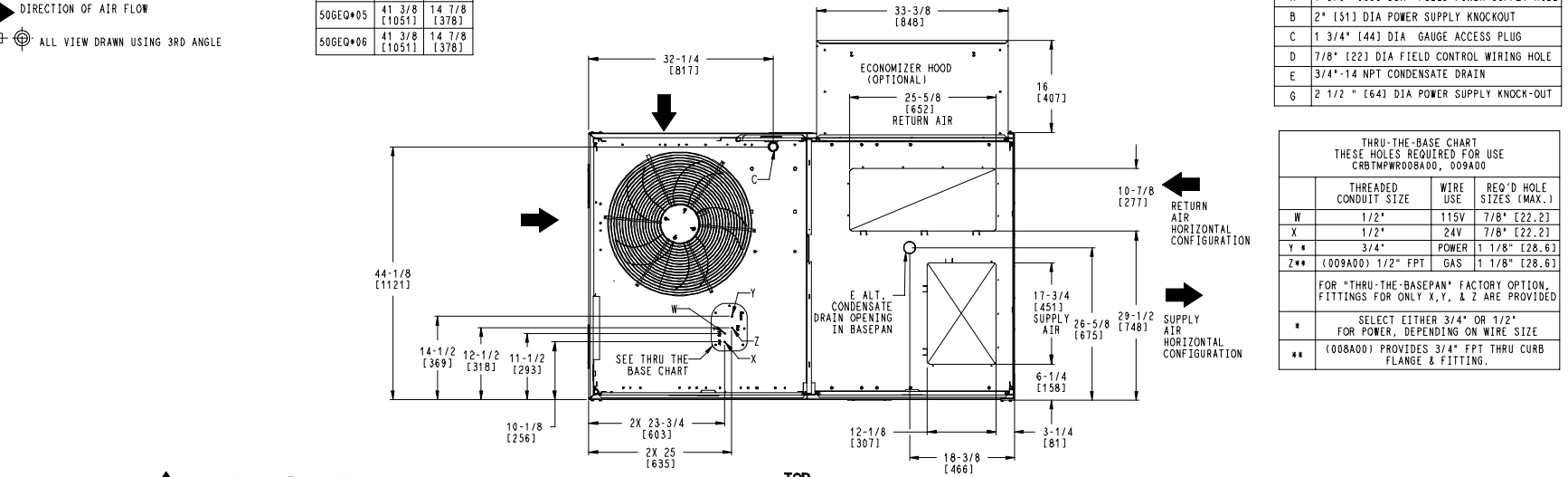

ITC CLASSIFICATION	SHEET	DATE	SUPERCEDES	50GEQ 04-06 SINGLE PACKAGE HEAT PUMP		REV
U.S. ECCN:NSR	1 OF 3	9/9/24	9/15/23		48TC006647	A

Certified Drawing for ID 6

Project: Climatec - City of Esc - Water Treatment Plant
Prepared By: Shawn Harlan

04/12/2025
11:49AM

UNIT	STD. UNIT WEIGHT *		CORNER WEIGHT (A)		CORNER WEIGHT (B)		CORNER WEIGHT (C)		CORNER WEIGHT (D)		C.G.		HEIGHT
	LBS.	KG.	LBS.	KG.	LBS.	KG.	LBS.	KG.	LBS.	KG.	X	Y	Z
50GEQ*04	475	215	128	58	120	54	110	50	117	53	36 [914]	22 3/8 [568]	16 1/8 [410]
50GEQ*05	594	269	163	74	148	67	135	61	149	68	35 3/8 [898]	22 5/16 [557]	16 1/2 [419]
50GEQ*06	596	270	163	74	148	67	135	61	149	68	35 3/8 [898]	22 5/16 [557]	16 1/2 [419]

*- STANDARD UNIT WEIGHT IS WITHOUT ELECTRIC HEAT AND WITHOUT PACKAGING.
FOR OTHER OPTIONS AND ACCESSORIES REFER TO THE PRODUCT DATA CATALOG.

Carrier
THIS DOCUMENT IS THE PROPERTY OF CARRIER CORPORATION AND IS DELIVERED UPON THE EXPRESS CONDITION THAT THE CONTENTS WILL NOT BE DISCLOSED OR USED WITHOUT CARRIER CORPORATION'S WRITTEN CONSENT.
SUBMISSION OF THESE DRAWINGS OR DOCUMENTS DOES NOT CONSTITUTE PART PERFORMANCE OR ACCEPTANCE OF CONTRACT.

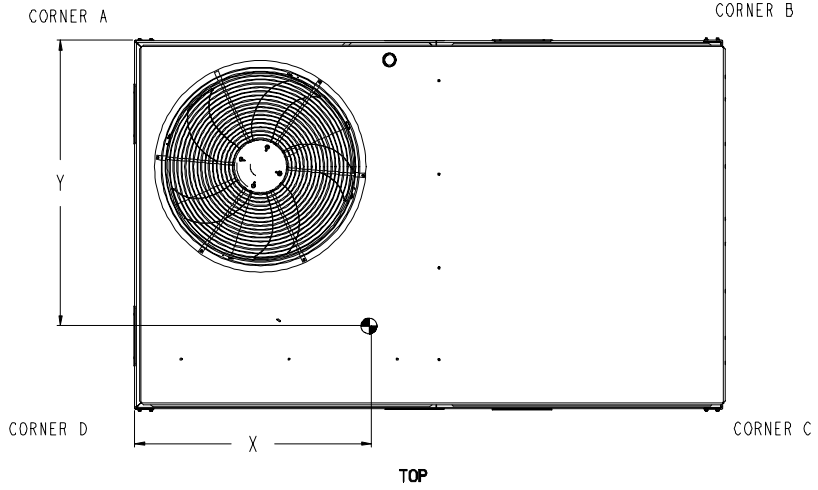

TOP

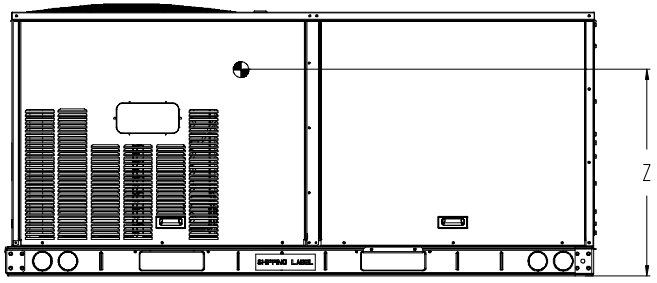

FRONT

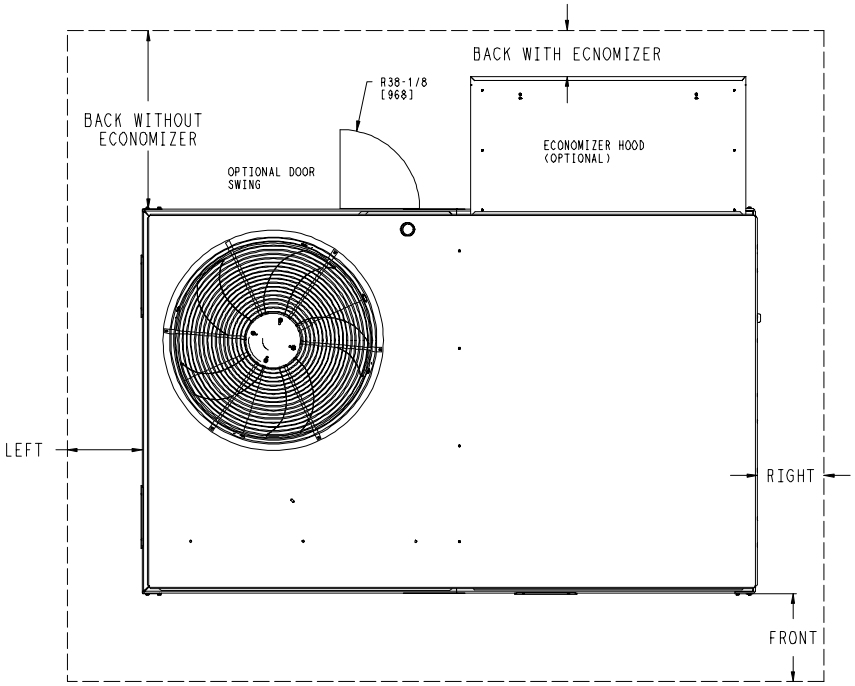

NOTE:

1. FOR ALL MINIMUM CLEARANCES LOCAL CODES OR JURISDICTIONS MAY PREVAIL.

CLEARANCE			
	SERVICE WITH:	SERVICE WITH:	OPERATING
SURFACE	CONDUCTIVE BARRIER	NONCONDUCTIVE BARRIER	CLEARANCE
FRONT	48 [1219mm]	36 [914mm]	18 [457mm]
LEFT	48 [1219mm]	42 [1067mm]	18 [457mm]
BACK W/O ECON	48 [1219mm]	42 [1067mm]	18 [457mm]
BACK W/ECON	36 [914mm]	36 [914mm]	18 [457mm]
RIGHT	36 [914mm]	36 [914mm]	18 [457mm]
TOP	72 [1829mm]	72 [1829mm]	72 [1829mm]

ITC CLASSIFICATION	SHEET	DATE	SUPERCEDES			REV
U.S. ECCN:NSR	2 OF 3	9/9/24	9/15/23	50GEQ 04-06 SINGLE PACKAGE HEAT PUMP	48TC006647	A

Certified Drawing for ID 6

Project: Climatec - City of Esc - Water Treatment Plant
Prepared By: Shawn Harlan

04/12/2025
11:49AM

Carrier | THIS DOCUMENT IS THE PROPERTY OF CARRIER CORPORATION AND IS DELIVERED UPON THE EXPRESS CONDITION THAT THE CONTENTS WILL NOT BE DISCLOSED OR USED WITHOUT CARRIER CORPORATION'S WRITTEN CONSENT. | SUBMISSION OF THESE DRAWINGS OR DOCUMENTS DOES NOT CONSTITUTE PART PERFORMANCE OR ACCEPTANCE OF CONTRACT.

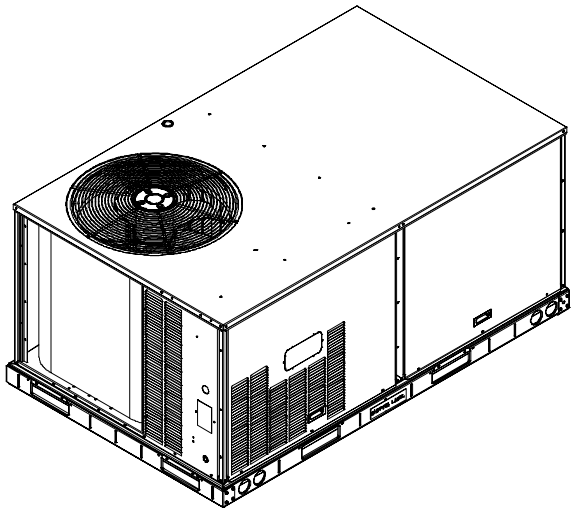

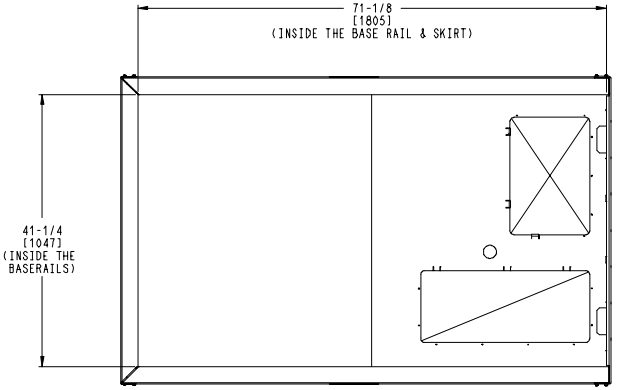

INSIDE BASERAIL DIMENSIONS
BOTTOM

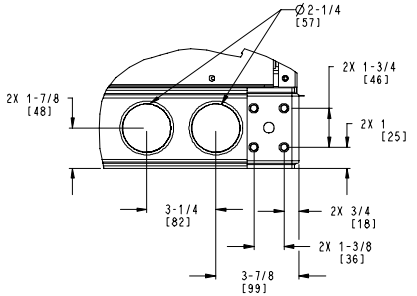

DETAIL **C**
TYP 4 PLCS

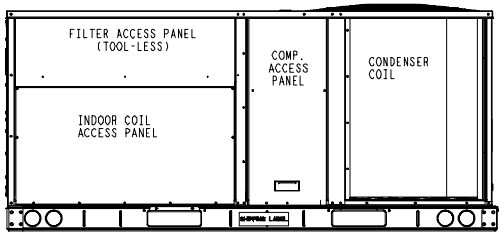

BACK

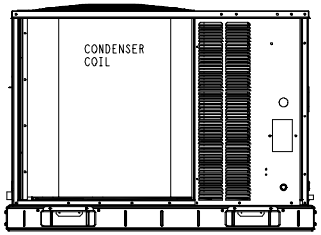

LEFT

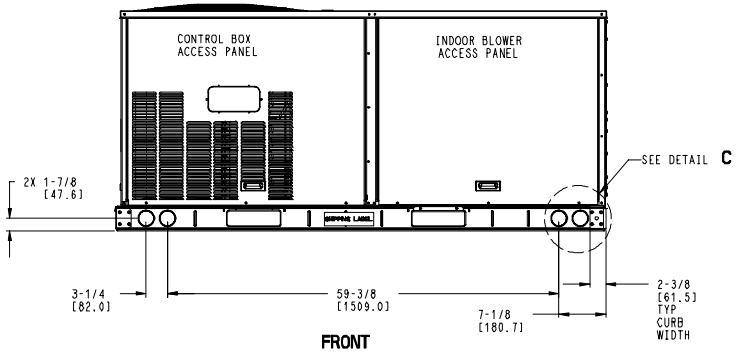

FRONT

ITC CLASSIFICATION	SHEET	DATE	SUPERCEDES			REV
U.S. ECCN:NSR	3 OF 3	9/9/24	9/15/23	50GEQ 04-06 SINGLE PACKAGE HEAT PUMP	48TC006647	A

Performance Summary For ID 6

Project: Climatec - City of Esc - Water Treatment Plant 04/12/2025
Prepared By: Shawn Harlan 11:49AM

Part Number:50GEQM05A2Q6-0A0A0

Refrigerant:	**R-454B**	
ARI SEER:	**17.00**	
ARI SEER2:	**16.00**	
Application EER (Rooftop Unit only):	**12.12**	

Base Unit Dimensions

Unit Length:	**74.4**	in
Unit Width:	**46.6**	in
Unit Height:	**41.4**	in

Operating Weight

Base Unit Weight:	**594**	lb
E-coat Al/Cu - E-coat Al/Cu - Louvered Hail Guards:	**13**	lb
Total Operating Weight:	**607**	lb

Unit

Unit Voltage-Phase-Hertz:	**460-3-60**	
Air Discharge:	**Vertical**	
Fan Drive Type:	**Direct Drive**	
Actual Airflow:	**1600**	CFM
Site Altitude:	**0**	ft

Cooling Performance

Condenser Entering Air DB:	**95.0**	F
Evaporator Entering Air DB:	**80.0**	F
Evaporator Entering Air WB:	**67.0**	F
Entering Air Enthalpy:	**31.44**	BTU/lb
Evaporator Leaving Air DB:	**58.4**	F
Evaporator Leaving Air WB:	**57.1**	F
Evaporator Leaving Air Enthalpy:	**24.48**	BTU/lb
Unit Discharge Air DB:	**59.6**	F
Unit Discharge Air WB:	**57.6**	F
Unit Discharge Air Enthalpy:	**24.76**	BTU/lb
Gross Cooling Capacity:	**50.11**	MBH
Net Cooling Capacity:	**48.05**	MBH
Gross Sensible Capacity:	**37.34**	MBH
Net Sensible Capacity:	**35.28**	MBH
Compressor Power Input:	**3.18**	kW
Coil Bypass Factor:	**0.000**	

Heating Performance

Outdoor Ambient Temperature:	**47.0**	F
Entering Air Indoor Coil DB:	**70.0**	F
Leaving Air Indoor Coil DB:	**95.9**	F
Total Heating Capacity:	**44.80**	MBH
Integrated Heating Capacity:	**44.80**	MBH
Heating Power Input:	**3.60**	kW
High Temperature COP:	**3.80**	
Low Temperature COP:	**2.50**	
HSPF:	**7.2**	
High Temperature COP2:	**3.80**	
Low Temperature COP2:	**2.50**	
HSPF2:	**7.2**	

Supply Fan

External Static Pressure:	**1.00**	in wg
Fan RPM:	**1875**	
Fan Power:	**0.71**	BHP

Performance Summary For ID 6

Project: Climatec - City of Esc - Water Treatment Plant
Prepared By: Shawn Harlan

04/12/2025
11:49AM

NOTE: **Selected IFM RPM Range: 1047 - 2170**

Selection includes construction throwaway filter into the base fan curve. This filter is not MERV Rated.

Electrical Data

Voltage Range:	**414 - 506**
Compressor #1 RLA:	**8.1**
Compressor #1 LRA:	**62**
Indoor Fan Motor Type:	**MED**
Indoor Fan Motor FLA (Total):	**1.7**
Power Supply MCA:	**13**
Power Supply MOCP (Fuse or HACR):	**20**
Disconnect Size FLA:	**12**
Disconnect Size LRA:	**66**
Electrical Convenience Outlet:	**None**
Outdoor Fan [Qty / FLA (ea)]:	**1 / 0.8**

Control Panel SCCR: 5kA RMS at Rated Symmetrical Voltage

Acoustics

Sound Power Levels, db re 10E-12 Watts

	Discharge	Inlet	Outdoor
63 Hz	92.4	90.1	85.6
125 Hz	83.3	78.3	84.7
250 Hz	77.0	72.0	80.5
500 Hz	71.9	64.5	76.0
1000 Hz	68.4	66.6	72.4
2000 Hz	65.2	57.5	68.0
4000 Hz	62.5	51.6	62.8
8000 Hz	59.4	45.1	59.3
A-Weighted	75.8	71.2	79.0

Advanced Acoustics

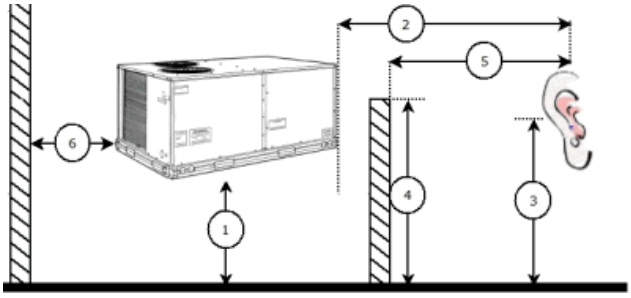

Advanced Accoustics Parameters

1. Unit height above ground:	**30.0**	ft
2. Horizontal distance from unit to receiver:	**50.0**	ft
3. Receiver height above ground:	**5.7**	ft
4. Height of obstruction:	**0.0**	ft
5. Horizontal distance from obstruction to receiver:	**0.0**	ft
6. Horizontal distance from unit to obstruction:	**0.0**	ft

Detailed Acoustics Information

Performance Summary For ID 6

Project: Climatec - City of Esc - Water Treatment Plant
Prepared By: Shawn Harlan

04/12/2025
11:49AM

Octave Band Center Freq. Hz	63	125	250	500	1k	2k	4k	8k	Overall
A	85.6	84.7	80.5	76.0	72.4	68.0	62.8	59.3	89.2 Lw
B	59.4	68.6	71.9	72.8	72.4	69.2	63.8	58.2	78.5 LwA
C	53.2	52.3	48.1	43.6	40.0	35.6	30.4	26.9	56.8 Lp
D	27.0	36.2	39.5	40.4	40.0	36.8	31.4	25.8	46.1 LpA

Legend
A Sound Power Levels at Unit's Acoustic Center, Lw
B A-Weighted Sound Power Levels at Unit's Acoustic Center, LwA
C Sound Pressure Levels at Specific Distance from Unit, Lp
D A-Weighted Sound Pressure Levels at Specific Distance from Unit, LpA

Calculation methods used in this program are patterned after the ASHRAE Guide; other ASHRAE Publications and the AHRI Acoustical Standards. While a very significant effort has been made to insure the technical accuracy of this program, it is assumed that the user is knowledgeable in the art of system sound estimation and is aware of the tolerances involved in real world acoustical estimation. This program makes certain assumptions as to the dominant sound sources and sound paths which may not always be appropriate to the real system being estimated. Because of this, no assurances can be offered that this software will always generate an accurate sound prediction from user supplied input data. If in doubt about the estimation of expected sound levels in a space, an Acoustical Engineer or a person with sound prediction expertise should be consulted.

Fan Curve

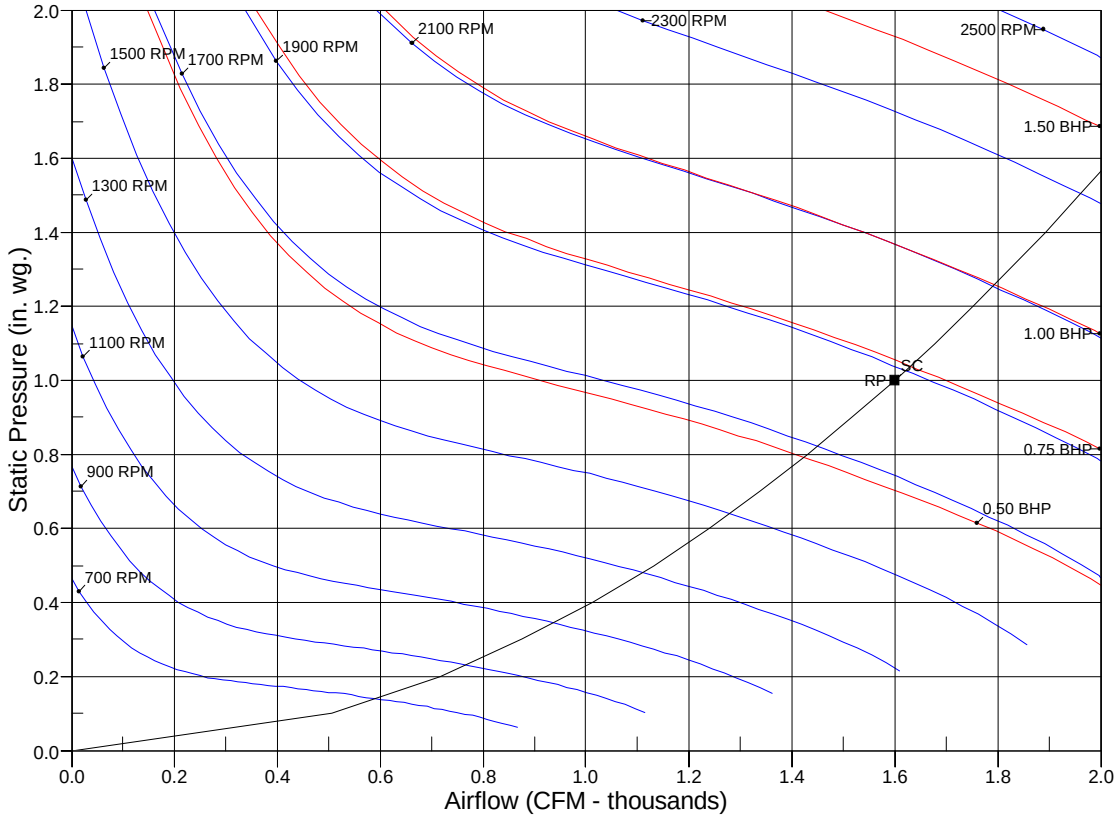

RPM = 1875 BHP = 0.71 Maximum RPM = 2660 Maximum BHP = 3.00
SC - System Curve RP - Rated Point

PowerLogger Commercial Solution 600

AlsoEnergy's vertically-integrated, edge-to-cloud platform includes a convenient standardized hardware monitoring solution for small to mid-sized commercial PV systems. The PLCS 600 combines our standard commercial datalogger with a revenue grade meter, a weatherproof NEMA 4 enclosure, and other supporting hardware. The PLCS 600 is recommended for 3-phase systems with up to 20 external inverters. Performance data is uploaded to PowerTrack, AlsoEnergy's flagship cloud-based application for monitoring, managing, and optimizing energy and financial performance of clean energy assets.

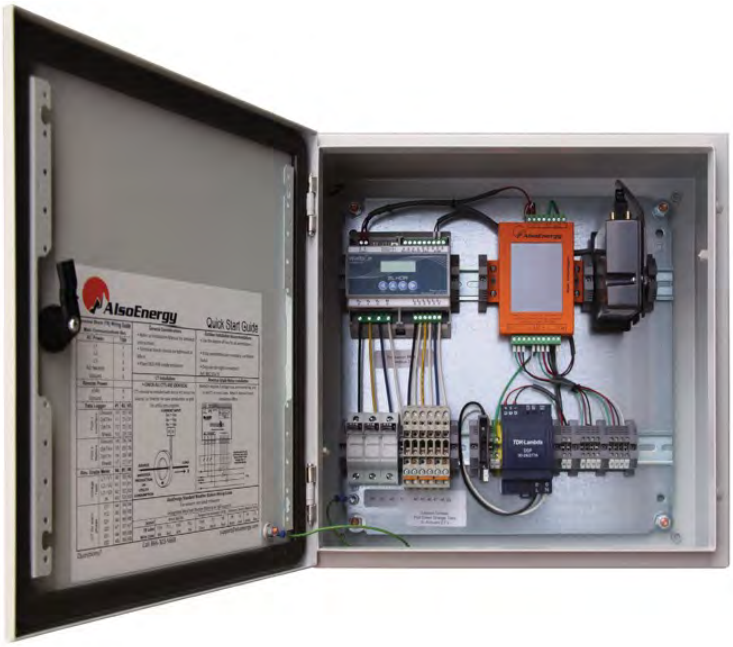

Standardized PLCS 600 includes:

- DataLogger with LCD touchscreen display
- Revenue grade energy meter compatible with all 5A CTs (sold separately)
- Three weather station choices may add data for irradiance, back-of-module panel temperature, ambient temperature, and wind speed
- 5-port Ethernet switch
- NEMA4 weatherproof enclosure
- 4G cell modem (requires a cellular plan)

Solution features

- Up to 20 external inverters
- Modbus via RS-485 or TCP connections to inverters
- 4G cellular connectivity
- Remote firmware updates
- Up to 1-minute data granularity
- Uploads at 5-minute intervals
- Suitable for demand meter, relay, other non-PV use cases
- For systems with a single metering point; direct metering or PT secondary voltage up to 600VAC
- Satisfies reporting requirements for most US electricity sector agencies
- All parts except weather sensors and cell modem covered with standard AlsoEnergy 5-year warranty
- Supported on PowerTrack only engineering & project management teams

v22 ©AlsoEnergy, Inc / 5400 Airport Bvd. Ste. 100 Boulder, CO 80301 USA / 866.303.5668

sales@alsoenergy.com

PLCS 600 Options

	PLCS-600-CM-BASE	+ cell modem, + reference cell, BOM panel temperature
	PLCS-600-CM-PLUS	+ cell modem, + reference cell, BOM panel temperature, ambient temperature, wind speed
	PLCS-600-CM-PRO	+Class C pyranometer

Specifications

Assembly	Enclosure dimensions	15.7" x 15.7" x 7.9" (400mm x 400mm x 200mm)
	Enclosure rating	NEMA4
	Operating temperature	-13° to 158°F (-25° to 70°C), <95% relative humidity non-condensing
	Power supply	120-277VAC
	Communication ports	Three available 10/100 Ethernet ports, two half-duplex rs485 ports
	Regulatory	UL listed 508A
Datalogger	Devices supported	Up to 40 connected Modbus RTU enabled devices (20 per rs485 port) / Recommended limit 32
	Storage	Removable 2GB industrial rated micro SD card
	Serial	RS-485 with integrated 120 ohm termination resistor
	Primary protocols	Modbus TCP, Modbus RTU, most proprietary inverter protocols
	Touch screen	Color, resistive touch screen 2" by 2.75"
	Warranty	Standard 5-year warranty
Meter	Voltage inputs	90-600VAC
	Accuracy	Meter 0.2% (see CT datasheet for CT accuracy information)
	CTs	Any CT with 5A secondary current ratio (sold separately)
	CT accuracy	Refer to CT datasheet
	Warranty	Standard 5-year warranty

Irradiance sensor (Included with Base, Plus, and Pro weather station options)	Irradiance sensor type	Monocrystalline Silicon reference cell with mounting bracket and 3m twisted pair shielded cable
	Absolute accuracy	±5W/m2 ± 2.5% of reading
	Dimensions	3.34" W x 6.10" H x 1.54" D | (85mm x 155mm x 39mm)
	Warranty	1 year against defects in materials and workmanship
Back of module panel temperature sensor (Included with Base, Plus, and Pro weather station options)	Form	3m cable with 3-pin connector compatible with paired reference cell - sensor cable cannot be extended
	Sensor type	PT1000 Class A
	Mounting	Self-adhesive for attaching to a solar module
	Warranty	1 year against defects in materials and workmanship
Wind speed sensor (Included with Plus and Pro weather station options)	Form	Cup star anemometer with 5m 2-pin connector compatible with paired reference cell
	Sensor type	Reed relay
	Mounting	Mounting bracket for pole or surface mounting included
	Accuracy	0.5 m/s or 5% of reading
	Sensor range	0.9 – 40m/s (2 – 90 mph)
	Warranty	1 year against defects in materials and workmanship
Ambient temperature sensor (Included with Plus and Pro weather station options)	Voltage inputs	90-600VAC
	Accuracy	Meter 0.2% (see CT datasheet for CT accuracy information)
	CTs	Any CT with 5A secondary current ratio (sold separately)
	Warranty	Standard 5-year warranty
Class C pyranometer (Included with Pro weather station option)	Form	ISO 9060 Spectrally Flat Class C (Second Class) Pyranometer
	Communication	RS-485 / Modbus
	Mount/Set up	Ball-level tube mount/10 Meter, M12-A Cable
	Warranty	Manufacturer's 5-year warranty
Cell modem	Cellular data	4G LTE
	Warranty	1 year

ChargePoint® CP6000 AC Commercial Station

Specifications and Ordering Information

Dual port, pedestal mount, 18 ft cable

Ordering Information

The order codes below represent specific product configurations. Please contact ChargePoint Sales for additional information. Specify model number followed by the applicable code(s).

The order code sequence is Model-Options. Software, Services and Other are ordered as separate line items.

Hardware: Station Model

Description	Order Code
80 A Dual port, pedestal mount, 18 ft cable	CP6021B-80A-L5.5
80 A Single port, pedestal mount, 18 ft cable	CP6011B-80A-L5.5
80 A Dual port, pedestal mount, 18 ft cable, EMV chip reader	CP6021B-80A-L5.5-CHIP
80 A Single port, pedestal mount, 18 ft cable, EMV chip reader	CP6011B-80A-L5.5-CHIP
50 A Dual port, pedestal mount, 18 ft cable	CP6021B-50A-L5.5
50 A Single port, pedestal mount, 18 ft cable	CP6011B-50A-L5.5
50 A Dual port, pedestal mount, 18 ft cable, EMV chip reader	CP6021B-50A-L5.5-CHIP
50 A Single port, pedestal mount, 18 ft cable, EMV chip reader	CP6011B-50A-L5.5-CHIP
80 A Dual port, wall mount, 18 ft cable	CP6023B-80A-L5.5
80 A Single port, wall mount, 18 ft cable	CP6013B-80A-L5.5
80 A Dual port, wall mount, 18 ft cable, EMV chip reader	CP6023B-80A-L5.5-CHIP
80 A Single port, wall mount, 18 ft cable, EMV chip reader	CP6013B-80A-L5.5-CHIP
50 A Dual port, wall mount, 18 ft cable	CP6023B-50A-L5.5
50 A Single port, wall mount, 18 ft cable	CP6013B-50A-L5.5
50 A Dual port, wall mount, 18 ft cable, EMV chip	CP6023B-50A-L5.5-CHIP

ChargePoint, Inc. reserves the right to alter product offerings and specifications at any time without notice, and is not responsible for typographical or graphical errors that may appear in this document.

reader	
50 A Single port, wall mount, 18 ft cable, EMV chip reader	CP6013B-50A-L5.5-CHIP
80 A Dual port, pedestal mount, 23 ft cable	CP6021B-80A-L7
80 A Single port, pedestal mount, 23 ft cable	CP6011B-80A-L7
80 A Dual port, pedestal mount, 23 ft cable, EMV chip reader	CP6021B-80A-L7-CHIP
80 A Single port, pedestal mount, 23 ft cable, EMV chip reader	CP6011B-80A-L7-CHIP
50 A Dual port, pedestal mount, 23 ft cable	CP6021B-50A-L7
50 A Single port, pedestal mount, 23 ft cable	CP6011B-50A-L7
50 A Dual port, pedestal mount, 23 ft cable, EMV chip reader	CP6021B-50A-L7-CHIP
50 A Single port, pedestal mount, 23 ft cable, EMV chip reader	CP6011B-50A-L7-CHIP
80 A Dual port, wall mount, 23 ft cable	CP6023B-80A-L7
80 A Single port, wall mount, 23 ft cable	CP6013B-80A-L7
80 A Dual port, wall mount, 23 ft cable, EMV chip reader	CP6023B-80A-L7-CHIP
80 A Single port, wall mount, 23 ft cable, EMV chip reader	CP6013B-80A-L7-CHIP
50 A Dual port, wall mount, 23 ft cable	CP6023B-50A-L7
50 A Single port, wall mount, 23 ft cable	CP6013B-50A-L7
50 A Dual port, wall mount, 23 ft cable, EMV chip reader	CP6023B-50A-L7-CHIP
50 A Single port, wall mount, 23 ft cable, EMV chip reader	CP6013B-50A-L7-CHIP

ChargePoint, Inc. reserves the right to alter product offerings and specifications at any time without notice, and is not responsible for typographical or graphical errors that may appear in this document.

ChargePoint, Inc. | Copyright © 2024

80 A Dual port, pedestal mount, 18 ft cable, Omni Port (enables J1772 and/or NACS vehicle charging)	CP6621B-80A-L5.5
80 A Single port, pedestal mount, 18 ft cable, Omni Port (enables J1772 and/or NACS vehicle charging)	CP6611B-80A-L5.5
50 A Dual port, pedestal mount, 18 ft cable, Omni Port (enables J1772 and/or NACS vehicle charging)	CP6621B-50A-L5.5
50 A Single port, pedestal mount, 18 ft cable, Omni Port (enables J1772 and/or NACS vehicle charging)	CP6611B-50A-L5.5
80 A Dual port, wall mount, 18 ft cable, Omni Port (enables J1772 and/or NACS vehicle charging)	CP6623B-80A-L5.5
80 A Single port, wall mount, 18 ft cable, Omni Port (enables J1772 and/or NACS vehicle charging)	CP6613B-80A-L5.5
50 A Dual port, wall mount, 18 ft cable, Omni Port (enables J1772 and/or NACS vehicle charging)	CP6623B-50A-L5.5
50 A Single port, wall mount, 18 ft cable, Omni Port (enables J1772 and/or NACS vehicle charging)	CP6613B-50A-L5.5
80 A Dual port, pedestal mount, 23 ft cable, Omni Port (enables J1772 and/or NACS vehicle charging)	CP6621B-80A-L7
80 A Single port, pedestal mount, 23 ft cable, Omni Port (enables J1772 and/or NACS vehicle charging)	CP6611B-80A-L7
50 A Dual port, pedestal mount, 23 ft cable, Omni Port (enables J1772 and/or NACS vehicle charging)	CP6621B-50A-L7
50 A Single port, pedestal mount, 23 ft cable, Omni Port (enables J1772 and/or NACS vehicle charging)	CP6611B-50A-L7

ChargePoint, Inc. reserves the right to alter product offerings and specifications at any time without notice, and is not responsible for typographical or graphical errors that may appear in this document.

ChargePoint, Inc. | Copyright © 2024

80 A Dual port, wall mount, 23 ft cable, Omni Port (enables J1772 and/or NACS vehicle charging)	CP6623B-80A-L7
80 A Single port, wall mount, 23 ft cable, Omni Port (enables J1772 and/or NACS vehicle charging)	CP6613B-80A-L7
50 A Dual port, wall mount, 23 ft cable, Omni Port (enables J1772 and/or NACS vehicle charging)	CP6623B-50A-L7
50 A Single port, wall mount, 23 ft cable, Omni Port (enables J1772 and/or NACS vehicle charging)	CP6613B-50A-L7

Hardware: Other

Description	Order Code
Pedestal Concrete Mounting Kit	CP6K-CMT-NA
CP6000 Dual Port Omni Port Conversion Kit	CP6000-DUAL-J1772-NACS-OMNI-CONV-KIT
CP6000 Single Port Omni Port Conversion Kit	CP6000-SINGLE-J1772-NACS-OMNI-CONV-KIT

Software and Services

Description	Order Code
ChargePoint Enterprise Plan	CPCLD-ENTERPRISE-n*
ChargePoint Fleet Commercial	CPCLD-COMMERCIAL-n*
ChargePoint Assure	CP6000-ASSURE-n*
ChargePoint Installation	CP6000-INSTALL-COMMISSIONING

Note: All CP6000 stations require a network service plan per port.

*Substitute n for desired years (1, 2, 3, 4 or 5 years)

ChargePoint, Inc. reserves the right to alter product offerings and specifications at any time without notice, and is not responsible for typographical or graphical errors that may appear in this document.

Architectural Drawings and Dimensions

Pedestal Mount

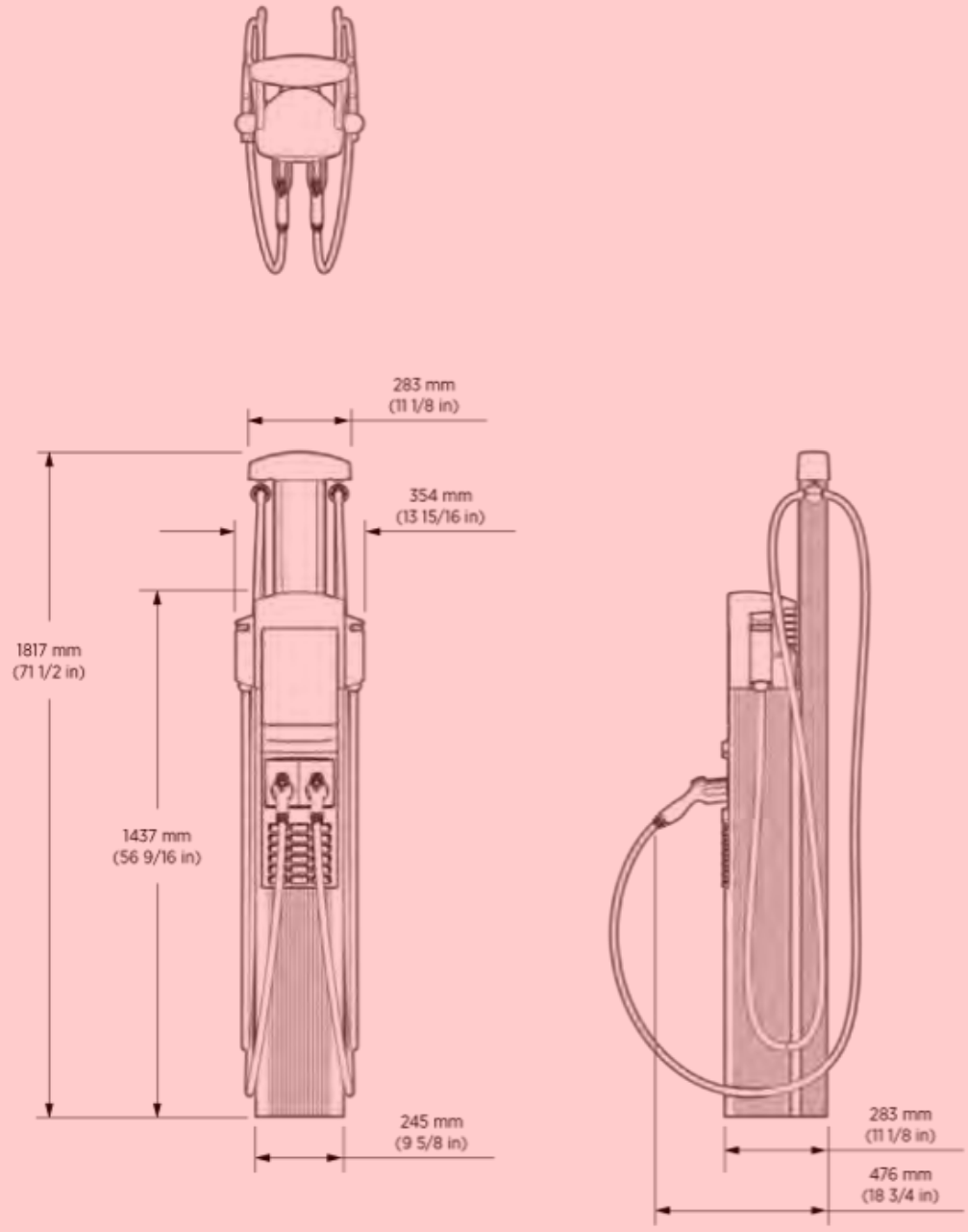

ChargePoint, Inc. reserves the right to alter product offerings and specifications at any time without notice, and is not responsible for typographical or graphical errors that may appear in this document.

Wall Mount

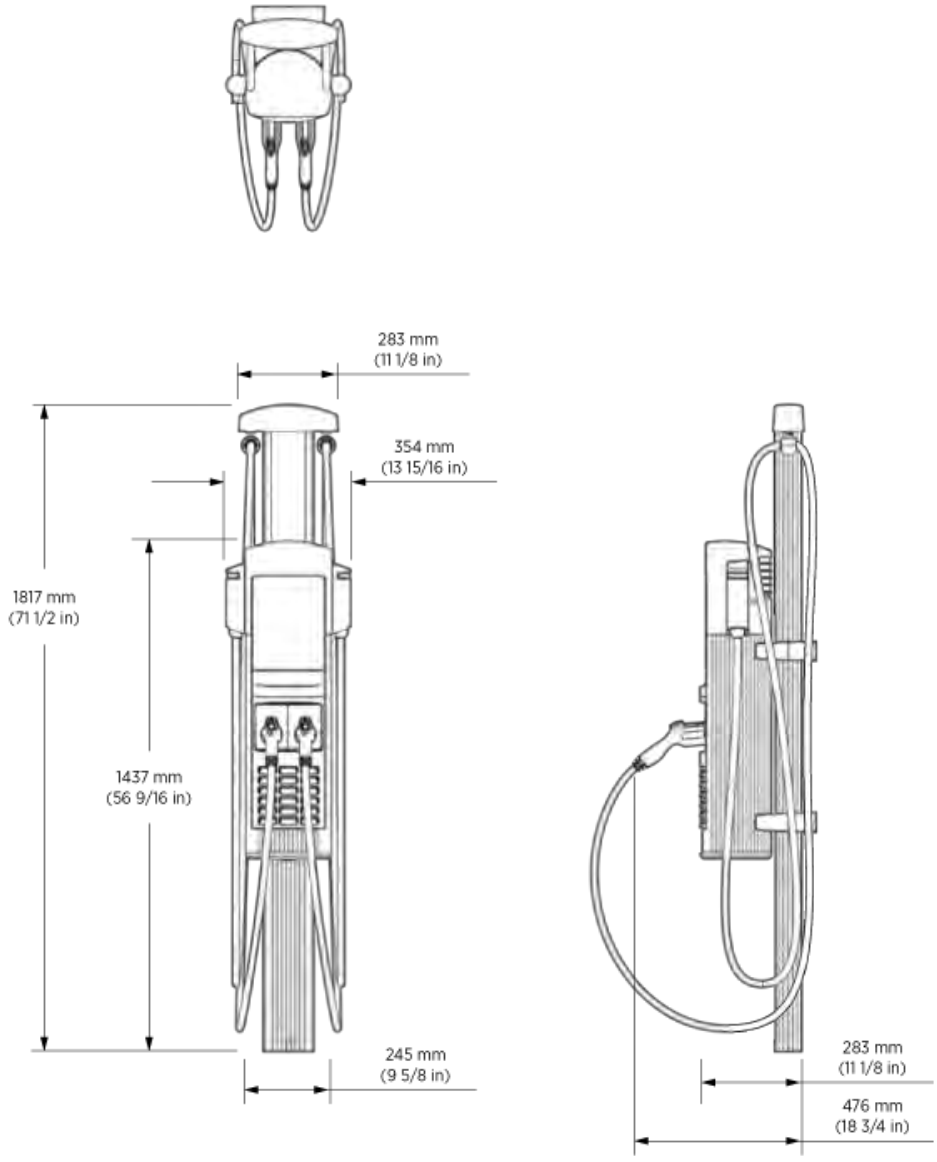

ChargePoint, Inc. reserves the right to alter product offerings and specifications at any time without notice, and is not responsible for typographical or graphical errors that may appear in this document.

General Specifications

Electrical Input

The CP6000 AC Commercial Station supports flexible electrical input/output settings up to 80 A to fit your fueling needs, whether for a workplace, multi-family dwelling, or other application.

Power Select allows stations to be installed and configured for current lower than the maximum 80 A. Power Select current options include 16 A, 24 A, 32 A, 40 A, 48 A, 50 A, 56 A, 64 A, and 72 A.

Power Share allows a dual-port station to share power from a single circuit across two ports, adjusting power depending on whether one or both are charging. Standard wiring uses an independent circuit for each port. Power Share can be used in combination with Power Select.

Station	Electrical Input	Single Port (AC Voltage 208 / 240 V AC)			Dual Port (AC Voltage 208 / 240 V AC)		
		Input Current	Input Power Connection	Required Service Panel Breaker	Input Current	Input Power Connection	Required Service Panel Breaker
80 A	Maximum 80 A (Standard)	80 A	One 100 A branch circuit	100 A dual pole (non-GFCI)	80 A x 2	Two independent 100 A branch circuits	100 A dual pole (non GFCI) x 2
	Maximum 80 A (Power Share*)	N/A	N/A	N/A	80 A	One 100 A branch circuit	100 A dual pole (non GFCI)
	Power Select** 16 A – 72 A (Standard)	16 A - 72 A	One branch circuit rated 125% of input current (20 A – 90 A)	Dual pole (non-GFCI) rated 125% of input current (20 A – 90 A)	16 A - 72 A x 2	Two independent branch circuits rated 125% of input current (20 A – 90 A)	Dual pole (non-GFCI) rated 125% of input current (20 A – 90 A) x 2
	Power Select 16 A	N/A	N/A	N/A	16 A - 72 A	One branch circuit rated 125% of	Dual pole (non-GFCI)

ChargePoint, Inc. reserves the right to alter product offerings and specifications at any time without notice, and is not responsible for typographical or graphical errors that may appear in this document.

	- 72 A (Power Share)					input current (20 A – 90 A)	rated 125% of input current (20 A – 90 A)
50 A	Maximum 50 A (Standard)	50 A	One 70 A branch circuit	70 A dual pole (non-GFCI)	50 A x 2	Two independent 70 A branch circuits	70 A dual pole (non GFCI) x 2
	Maximum 50 A (Power Share*)	N/A	N/A	N/A	80 A	One 70 A branch circuit	70 A dual pole (non GFCI)
	Power Select** 16 A – 48 A (Standard)	16 A - 48 A	One branch circuit rated 125% of input current (20 A – 60 A)	Dual pole (non-GFCI) rated 125% of input current (20 A- 60 A)	16 A - 48 A x 2	Two independent branch circuits rated 125% of input current (20 A – 60 A)	Dual pole (non-GFCI) rated 125% of input current (20 A – 60 A) x 2
	Power Select 16 A - 48 A (Power Share)	N/A	N/A	N/A	16 A - 48 A	One branch circuit rated 125% of input current (20 A – 60 A)	Dual pole (non-GFCI) rated 125% of input current (20 A – 60 A)
Service Panel/Breaker GFCI		Do not provide external GFCI as it may conflict with internal GFCI (CCID)					
Wiring – Standard		3-wire (L1, L2, Earth) No neutral			5-wire (L1, L1, L2, L2, Earth)		
Wiring – Power Share		N/A			3-wire (L1, L2, Earth)		
Station Power		8 W typical (standby), 15 W maximum (operation)					

ChargePoint, Inc. reserves the right to alter product offerings and specifications at any time without notice, and is not responsible for typographical or graphical errors that may appear in this document.

ChargePoint, Inc. | Copyright © 2024

Line to Ground Voltage	120 V +/- 10%

Electrical Output for 80A Station

Electrical Output	Single Port (AC Voltage 208 / 240 V AC)	Dual Port (AC Voltage 208 / 240 V AC)
Maximum 80 A (Standard)	19.2 kW (240 V AC @ 80A)	19.2 kW (240 V AC @ 80 A)
Maximum 80 A (Power Share)	N/A	19.2 kW (240V AC @ 80A) x 1 or 9.6 kW (240V AC @ 40A) x 2
Power Select 16A - 72A (Standard)	3.8 kW - 17.3 kW (240V AC @ 16A - 72A)	3.8 kW - 17.3 kW (240V AC @ 16A - 72A) x 2
Power Select 16A - 72A (Power Share)	N/A	3.8 kW - 17.3 kW (240V AC @ 16A - 72A) x 1 or 1.9 kW - 8.6 kW (240V AC @ 8A - 36A) x 2

Electrical Output for 50A Station

Electrical Output	Single Port (AC Voltage 208 / 240 V AC)	Dual Port (AC Voltage 208 / 240 V AC)
Maximum 50A (Standard)	12.0 kW (240V AC @ 50A)	12.0 kW (240V AC @ 50A)
Maximum 50A (Power Share)	N/A	12.0 kW (240V AC @ 50A) x 1 or 6.0 kW (240V AC @ 25A) x 2
Power Select 16A - 48A (Standard)	3.8 kW - 11.5 kW (240V AC @ 16A - 48A)	3.8 kW - 11.5 kW (240V AC @ 16A - 48A) x 2
	N/A	3.8 kW - 11.5 kW (240V AC @

ChargePoint, Inc. reserves the right to alter product offerings and specifications at any time without notice, and is not responsible for typographical or graphical errors that may appear in this document.

ChargePoint, Inc. | Copyright © 2024

Power Select 16A - 48A (Power Share)		16A - 48A) x 1 or 1.9 kW - 5.8 kW (240V AC @ 8A - 24A) x 2

Mounting and Functional Interfaces

Connector Type	J1772, NACS (Omni Port)
Number of Ports	Single, dual
Mounting	Pedestal, wall
Cable Length	18 ft (5.5 m), 23 ft (7 m)
Cable Management	Yes
Authentication and Payment	RFID: ISO 15693, ISO 14443, NEMA EVSE 1.2-2015 (UR) Virtual RFID NFC (Tap to Charge) Contactless credit card Virtual Contactless credit card Apple Pay / Google Pay EMV chip credit card (available on -CHIP models only) Remote: Mobile App and In Vehicle Dash (if supported by vehicle)
Locking Holster	Yes
ISO 15118 Protocol	Supported by hardware
Display	Full color 8-inch interactive display with full motion video, UV protection, gesture touch controls, and multi-language support

Safety and Connectivity Features

Ground Fault Detection	20 mA CCID with auto retry
Open Safety Ground Detection	Continuously monitors presence of safety (green wire) ground connection
Plug-Out Detection	Power terminated per SAE J1772 specifications
Energy Measurement	Meter accuracy 1% Accuracy class 2.0

ChargePoint, Inc. reserves the right to alter product offerings and specifications at any time without notice, and is not responsible for typographical or graphical errors that may appear in this document.

	Acceptance tolerance 1.0%
Power Report/Store Interval	15-minute interval aligned to hour. Responsive to load management signals.
Local Area Network	Wi-Fi 2.4 GHz and 5GHz (802.11 a/n/b/g)
Wide Area Network	LTE Category 4
Network Communication Protocol	OCPP 2.0.1
Ethernet connection	Capable with accessory

Safety and Operational Ratings

Station Enclosure Rating	Type 3R per UL 50E
Safety and Compliance	UL and cUL listed; complies with UL 2594, UL 2231-1, UL 2231-2, and NEC Article 625 Energy Star NTEP/CTEP
Station Surge Protection	6 kV @ 3,000 A. In geographic areas subject to frequent thunderstorms, supplemental surge protection at the service panel is recommended.
Short Circuit Current Rating	5 kA
EMC Compliance	FCC Part 15 Class B
Operating Temperature	-40°C to 50°C (-40°F to 122°F)
Non-Operating Temperature	-40°C to 60°C (-40°F to 140°F)
Terminal Block Temperature Rating	105°C (221°F)
Operating Humidity	Up to 85% @ 50°C (122°F) non-condensing
Non-Operating Humidity	Up to 95% @ 50°C (122°F) non-condensing

Other Specifications

Weight	Wall Mount: 68 kg (150 lb)

ChargePoint, Inc. reserves the right to alter product offerings and specifications at any time without notice, and is not responsible for typographical or graphical errors that may appear in this document.

ChargePoint, Inc. | Copyright © 2024

	Pedestal Mount: 77 kg (170 lb)
Warranty	Limited 2-Year Parts Warranty
FHWA	Buy American compliant options available

Contact Us

ChargePoint, Inc.
240 East Hacienda Avenue
Campbell, CA 95008-6617 USA

+1.408.841.4500 or
+1.877.370.3802 US and Canada toll-free

Visit chargepoint.com

Call +1.408.705.1992

Email sales@chargepoint.com

ChargePoint, Inc. reserves the right to alter product offerings and specifications at any time without notice, and is not responsible for typographical or graphical errors that may appear in this document.

ChargePoint, Inc. | Copyright © 2024

Copyright © 2024 ChargePoint, Inc. All rights reserved. CHARGEPOINT is a U.S. registered trademark/service mark, and an EU registered logo mark of ChargePoint, Inc. All other products or services mentioned are the trademarks, service marks, registered trademarks or registered service marks of their respective owners. August 2024

ChargePoint, Inc. reserves the right to alter product offerings and specifications at any time without notice, and is not responsible for typographical or graphical errors that may appear in this document.

SOLECTRIA® PVI-36TL-480-V2

3-PHASE TRANSFORMERLESS COMMERCIAL STRING INVERTERS

FEATURES

- Certified to IEEE 1547-2018 and UL 1741SB
- Wirebox models with built-in SunSpec compliant transmitters for Module-Level Rapid Shutdown for simple, safe NEC compliance
- UL Listed as a PV Rapid Shutdown System with APsmart
- Integrated UL-listed Arc-Fault protection
- 15-90° mounting angle allows low-profile rooftop installations
- 3 MPPT's with 5 inputs each for PV array flexibility
- Industry-leading DC/AC ratio of 1.7
- Integrated AC and DC disconnects
- Remote firmware upgrades and diagnostics
- NEMA 4X outdoor rated enclosure with proven performance
- Copper and Aluminum compatible AC connections
- Compatible with Bifacial PV Modules

OPTIONS

- Shade cover
- DC fuse bypass
- Web-based monitoring

Yaskawa Solectria Solar's PVI-36TL-480-V2 are transformerless 3-phase inverters, ideal for rooftops, carports and ground-mount PV systems.

The PVI-36TL-480-V2 is the new generation of 36kW transformerless inverters from Yaskawa Solectria Solar that are IEEE 1547-2018 compliant. It comes standard with AC and DC disconnects, three MPPTs, and a wiring box with 15 fuse positions.

This updated inverter is improved for rooftop PV systems. Module-Level Rapid shutdown (MLRSD) wirebox models provide PV Rapid Shutdown System (PVRSS) compliance and include a built-in SunSpec compliant powerline communication transmitter.

Rapid-shutdown-ready wireboxes provide compatibiity with APsmart rapid shutdown products.

Yaskawa Solectria Solar's PVI-36TL-480-V2 inverters, including standard wireboxes and the rapid-shutdown ready wirebox models, provides flexibility and convenience unmatched in the industry.

Standard Wirebox

- 20A fuses, both polarities
- No built-in PVRSS transmitter

Module-Level Rapid Shutdown Wireboxes

- 20A fuses; positive polarity only
- Built-in PVRSS transmitter
- Compatible with APsmart module-level rapid shutdown devices

APsmart
ALTENERGY POWER

YASKAWA
SOLECTRIA SOLAR

PVI-36TL-480-V2 TECHNICAL DATA

SPECIFICATIONS

Inverter Model		PVI-36TL-480-V2
DC Input	Maximum PV Power	61.2 kW (22.4 kW per MPPT)
	Maximum Input Voltage	1000 VDC
	DC Voltage Ranges: Operating/Max. Power (MPPT)	200-950 VDC / 400-850 VDC
	Start-up DC Input Voltage/Power	330 V / 80 W
	Number of MPPT Trackers/Inputs	3 Trackers / 5 Fused-inputs each
	Maximum Available PV Current (Isc x 1.25)	204 A (68 A per MPPT)
	DC Surge Protection	Type II MOV, 2800 V_C , 20 kA I_{TM} (8/20 µs)
AC Output	Rated AC Real Power/Apparent Power/Output Current	36 kW / 36 kVA / 43.5 A
	Nominal Output Voltage/Range	480 VAC / -12% to +10%
	Nominal Output Frequency/Range	60 Hz / 57-63 Hz
	Power Factor	Unity, > 0.99 (Adjustable 0.8 leading to 0.8 lagging)
	Fault Current Contribution (1 Cycle RMS)	73.2 A (1.68 PU)
	Total Harmonic Distortion (THD) @ Rated Load	< 3%
	Grid Connection Type	3-Ph/PE/N (neutral conductor optional)
	Maximum OCPD Device	125 A
	AC Surge Protection	Type II MOV, 1500 V_C, 15 kA I_{TM} (8/20 µs)
Efficiency	Peak Efficiency	98.8%
	CEC Efficiency	97.5%
	Tare Loss	< 3 W
Environment	Ambient Temperature Range	-22°F to +140°F (-30°C to +60°C)
	Storage Temperature Range	No low temp minimum to +158°F (+70°C)
	Relative Humidity (non-condensing)	0-100%
	Operating Altitude	13,123.4 ft (4,000 m) Derating occurs from 9,842.5 ft (3,000 m)
Communications	Modbus Protocol	Proprietary / SunSpec
	SolrenView Web-Based Monitoring Service	Optional
	Revenue Grade Metering	Optional, External
	Communication Interface	RS-485 Modbus RTU
	Remote Firmware Upgrades	Ethernet Network Card required
	Remote Diagnostics	Ethernet Network Card required
Safety	Certifications and Standards	UL1741-SA/SB Ed. 3, UL1699B, CSA-C22.2 NO.107.1-01, IEEE1547-2018; FCC PART15, UL 1998
	Selectable Grid Standards	IEEE 1547-2014, IEEE 1547a-2018, CA Rule 21, ISO-NE, HECO
	Smart Grid Features	Volt-RideThru, Freq-RideThru, Ramp-Rate, Specified-PF, Volt-VAr, Freq-Watt, Volt-Watt
Warranty	Standard Limited Warranty	10 Years
Mechanical	Acoustic Noise Rating	< 60 dBA @ 1 m and 25°C
	AC/DC Disconnect	Standard, fully-integrated, load break rated
	Mounting Angle*	15° - 90° from horizontal
	Weight	Inverter: 123.5 lbs (56 kg); Wiring Box: 33 lbs (15 kg)
	Enclosure Rating and Finish	NEMA Type 4X; Polyester Powder Coated Aluminum
	Dimensions (H x W x D)	Power Head: 22.7" x 23.6" x 10.24" (576 mm x 600 mm x 260 mm)
		Wirebox: 16.7" x 23.6" x 10.24" (424 mm x 600 mm x 260 mm)
		Overall: 39.4" x 23.6" x 10.24" (1000 mm x 600 mm x 260 mm)

Wirebox Specifications			
Wirebox	Fused Inputs	15 Fused Positions (5 Positions per MPPT) 20 A Included (25, 30 A accepted)**	
Wirebox Versions	Standard	PVI-36-50-60-WB-S (both polarities fused)	No MLRSD transmitter included
	APsmart Transmitter Built-in	PVI-36-50-60-WB-AP (only positive polarity fused)	MLRSD compatitility: APsmart RSD-S and RSD-D

* Shade cover accessory required for installation of 75° or less
** Yaskawa Solectria Solar does not supply optional fuses sizes

IT'S PERSONAL

SOLECTRIA®
PVI-50TL-480 / PVI-60TL-480

3-PHASE TRANSFORMERLESS COMMERCIAL STRING INVERTERS

FEATURES

- Certified to IEEE 1547-2018 and UL 1741SB
- Dual rated listing allows selection of either 50/60 kVA (factory default) or 55/66 kVA (allowing full rated power down to ±0.91 PF)
- Wirebox models with built-in SunSpec compliant transmitters for Module-Level Rapid Shutdown for simple, safe NEC compliance
- UL Listed as a PV Rapid Shutdown System with APsmart
- Integrated UL-listed Arc-Fault protection
- 15-90° mounting angle allows low-profile rooftop installations
- 3 MPPT's with 5 inputs each for PV array flexibility
- Industry-leading DC/AC ratio of 1.8 (50TL) and 1.5 (60TL)
- Integrated AC and DC disconnects
- Remote firmware upgrades and diagnostics
- NEMA 4X outdoor-rated enclosure with proven performance
- Copper and Aluminum compatible AC connections
- Compatible with Bifacial PV Modules

OPTIONS

- Shade cover
- DC fuse bypass
- Web-based monitoring

Yaskawa Solectria Solar's PVI-50TL-480 and PVI-60TL-480 are transformerless 3-phase inverters, ideal for rooftops, carports and ground-mount PV systems

The PVI-50TL-480 and PVI-60TL-480 come standard with AC and DC disconnects, three MPPTs, and a wiring box with 15 fuse positions.

For rooftop PV systems, both Module-Level Rapid shutdown (MLRSD) wirebox models provide PV Rapid Shutdown System (PVRSS) compliance and include a built-in SunSpec compliant powerline communication transmitter.

Rapid-shutdown-ready wireboxes provide compatibiity with APsmart rapid shutdown products.

Yaskawa Solectria Solar's family of PVI-50/60TL-480 inverters, including standard wireboxes and the rapid-shutdown ready wirebox models, provides flexibility and convenience unmatched in the industry.

Standard Wirebox

- 20A fuses, both polarities
- No built-in PVRSS transmitter

Module-Level Rapid Shutdown Wireboxes

- 20A fuses; positive polarity only
- Built-in PVRSS transmitter
- Compatible with APsmart module-level rapid shutdown devices

APsmart
ALTENERGY POWER

YASKAWA
SOLECTRIA SOLAR

SPECIFICATIONS

Inverter Model (Listing File Name)		PVI-50TL-480 (PVI 50TL-480)	PVI-60TL-480 (PVI 60TL-480)
DC Input	Maximum PV Power	90 kW (33 kW per MPPT)	90 kW (33 kW per MPPT)
	Maximum Input Voltage	1000 VDC	1000 VDC
	Dc Voltage Ranges: Operating/Max. Power (MPPT)	200-950 VDC / 480-850 VDC	200-950 VDC / 540-850 VDC
	Start-up DC Input Voltage/Power	330 V / 80 W	330 V / 80 W
	Number of MPPT Trackers/Inputs	3 Trackers / 5 Fused-inputs each	3 Trackers / 5 Fused-inputs each
	Maximum Available PV Current (Isc x 1.25)	204 A (68 A per MPPT)	204 A (68 A per MPPT)
	Maximum Operating Input Current (clipping point)	108 A (36 A per MPPT)	114 A (38 A per MPPT)
	DC Surge Protections	Type II MOV, 2800 V_C , 20 kA I_{TM} (8/20 µs)	
AC Output	Rated AC Real Power/Apparent Power/Output Current	50 kW / 50 kVA / 60.2 A	60 kW 60kVA / 72.2 A
	Overhead Mode: Real Power/Apparent Power/Output Current	50 kW / 55 kVA / 66.2 A	60 kW / 66 kVA / 79.4 A
	Nominal Output Voltage/Range	480 VAC / -12% to +10%	480 VAC / -12% to +10%
	Nominal Output Frequency/Range	60 Hz / 57-63 Hz	60 Hz / 57-63 Hz
	Power Factor	Unity, >0.99 (Adjustable 0.8 leading to 0.8 lagging)	Unity, >0.99 (Adjustable 0.8 leading to 0.8 lagging)
	Fault Current Contribution (1 Cycle RMS)	64.1 A	64.1 A
	Total Harmonic Distortion (THD) @ Rated Load	< 3%	< 3%
	Grid Connection Type	3-Ph/PE/N (neutral conductor optional)	3-Ph/PE/N (neutral conductor optional)
	Maximum OCPD Device	110 A	125 A
	AC Surge Protection	Type II MOV, 1240 V_C , 15 kA I_{TM} (8/20 µs)	
Efficiency	Peak Efficiency	98.8%	98.8%
	CEC Efficiency	98.5%	98.5%
	Tare Loss	< 1 W	< 1 W
Environment	Ambient Temperature Range	-22°F to +140°F (-30°C to +60°C); Derating occurs over +113°F (+45°C)	
	Storage Temperature Range	No low temp minimum to +158°F (+70°C)	
	Relative Humidity (non-condensing)	0-100%	
	Operating Altitude	13,123 ft (4,000 m) Derating occurs from 9,842.5 ft (3,000 m)	
Communications	Modbus Protocol	Proprietary / SunSpec	
	SolrenView Web-Based Monitoring Service	Optional	
	Revenue Grade Metering	Optional, External	
	Communication Interface	RS-485 Modbus RTU	
	Remote Firmware Upgrades	Ethernet Network Card required	
	Remote Diagnostics	Ethernet Network Card required	
Safety	Certifications and Standards	IEEE 1547-2018, UL 1741-SB, UL 1741SA-2016, UL1699B, UL1998, CSA-C22.2 No. 107.1-01, FCC Part 15 (Subpart B, Class A)	
	Selectable Grid Standards	IEEE 1547, CA Rule 21, ISO-NE, HECO	
	Smart Grid Features	Volt-RideThru, Freq-RideThru, Ramp-Rate, Specified-PF, Volt-VAr, Freq-Watt, Volt-Watt, Watt-VAr	
Warranty	Standard Limited Warranty	10 Years	
Mechanical	Acoustic Noise Rating	< 60 dBA @ 1 m and 25°C	
	AC/DC Disconnect	Standard, fully-integrated, load break rated	
	Mounting Angle*	15° - 90°◦ from horizontal	
	Weight	Inverter: 123.5 lbs (56 kg); Wiring Box: 33 lbs (15 kg)	
	Enclosure Rating and Finish	NEMA Type 4X; Polyester Powder Coated Aluminum	
	Dimensions (H x W x D)	Power Head: 22.7" x 23.6" x 10.24" (576 mm x 600 mm x 260 mm)	
		Wirebox: 16.7" x 23.6" x 10.24" (424 mm x 600 mm x 260 mm)	
		Overall: 39.4" x 23.6" x 10.24" (1000 mm x 600 mm x 260 mm)	

Wirebox Specifications			
Wirebox	Fused Inputs	15 Fused Positions (5 Positions per MPPT) 20 A Standard (25, 30 A accepted)**	
Wirebox Version	Standard	PVI-50-60TL-BX-S20 (both polarities fused), No MLRSD transmitter needed	
	APsmart Transmitter Built-in	PVI-50-60TL-WB-APS (only positive polarity fused)	MLRSD compatitility: APsmart RSD-S and RSD-D

* Shade cover accessory required for installation of 75° or less
** Yaskawa Solectria Solar does not supply optional fuses sizes

IT'S PERSONAL

SILFAB SOLAR®

SILFAB SOLAR INC.
SAFETY & INSTALLATION MANUAL

SILFAB ELITE : BK/BG
SILFAB PRIME : HC/HC+/QD
SILFAB COMMERCIAL : HN/HM/QM/XM/XM+

TABLE OF CONTENTS

1. Safety Notice 1
2. Installation Manual Disclaimer 1
3. General Information 1
3.1 Model Naming Overview 1
3.2 Electrical Specifications 1
3.3 Disclaimer of Liability 1
4. Product Certification 1
5. Limited Warranty 1
6. Module Specifications 1
7. Safety Precautions 1
8. Installation 2
8.1 Module Mounting Overview 2
8.2 Module Mounting Method using mounting holes 2
8.3 Mounting using clamping method 2
8.4 Mounting using rear flange mounted clamping hardware 2/3
8.5 Orientation and Tilt 3
Silfab Elite 4
Silfab Prime 6
Silfab Commercial 9
9. Handling Modules
9.1 Electrical Connection 12
9.2 Functional Grounding 13
9.3 Protective Grounding 13
9.4 Silfab Bifacial Modules 13
9.5 Marine Applications 14
10. Maintenance 15
11. Diagnostics &Troubleshooting 15
12. Module Identification 15
13 Packaging, Handling & Storage 16
13.1 Silfab's Packaging 16
13.2 Correct Handling of Module Packaging 17
13.3 How to Handle the Pallet 18
13.4 Unpacking Modules 18
13.5 Pallet Sheet 18
13.6 Recycling Packaging Materials 18
14. Revision Log 19

1. SAFETY NOTICE

This Safety and Installation Manual provides important safety information relating to the installation, maintenance and handling of Silfab SIL series modules. Professional installers, operation & maintenance technicians, and system users/owners should read this manual carefully and strictly follow the instructions. Failure to follow these instructions may result in death, injury or property damage, and possible void of warranty.

Please keep this manual for future reference.

We recommend checking www.silfabsolar.com regularly for the most updated version.

WARNING

All instructions should be read and understood before attempting to install, wire, operate and/or maintain the module. Module interconnects pass direct current (DC) when exposed to sunlight or other light sources. Contact with electrically active parts of the module, such as terminals, can result in injury or death, whether the module is connected or disconnected.

AVERTISSEMENT

Toutes les instructions devront être lues et comprises avant de procéder à l'installation, le câblage, l'exploitation et/ou l'entretien des panneau solaire. Les interconnexions des panneau solaire conduisent du courant continu (CC) lorsque le panneau est exposé à la lumière du soleil ou à d'autres sources lumineuses. Tout contact avec des éléments sous tension du panneau tels que ses bornes de sortie peut entraîner des blessures ou la mort, que le panneau soit connecté ou non.

2. INSTALLATION MANUAL DISCLAIMER

The information contained in this manual is subject to change by Silfab Solar Inc. without prior notice. Silfab Solar Inc. gives no guarantee of any kind whatsoever, either explicitly or implicitly, with respect to the information contained herein. This Manual (or document) is written in English with Spanish (or other language) translation for reference only. In case there are inconsistencies or conflicts between the English version and the Spanish version (or other language version) of this Manual (or document), the English version shall overcome and take control in all respects.

3. GENERAL INFORMATION

Silfab Solar modules convert the energy of light directly into continuous/direct current (DC) by the photovoltaic effect.

SIL series consisted of different modules in the sense of cell number, contact technology, and module size.

3.1 Model Naming Overview:

SIL-XXX B(X) / H(X) / N(X) / Q(X) / X(M) Where:
SIL-Silfab brand and XXX-indicates the power bin in watts.
B/H/N/Q/X is used to indicate technology, e.g. B = back-contact, H = mono half-cell, N = mono M3, Q = N-type, X = Bifacial. (X) to indicate size. C = 1762 mm x 1037 mm, C+ = 1914 mm x 1036 mm, D = 1721 mm x 1133 mm, G = 1864 mm x 1029 mm, K = 1795 mm x 990 mm, M = 2098 mm x 1133 mm, M+ = 2278 mm x 1133 mm, N = 2263 mm x 1037 mm.

3.2 Electrical Specifications

The performance and all photovoltaic parameters of the modules are measured under two different conditions: (1) Standard Test Conditions (STC) and (2) Normal Operating Cell Temperature (NOCT). Detailed electrical characteristics for all PV modules are presented in our products' DATASHEET and www.silfabsolar.com.

3.3 Disclaimer of Liability

Since the methods of system design, installation techniques, handling and use of this product are beyond company control; Silfab Solar Inc. does not assume responsibility and expressly disclaims liability, for loss, damage or expense resulting from improper installation, handling or use.

4. PRODUCT CERTIFICATION

All Silfab products have UL 61215-1:2017 Ed.1, UL 61215-2:2017 Ed.1, UL 61730-1:2017 Ed.1, UL 61730-2:2017 Ed.1, CSA C22.2#61730-1:2019 Ed.2, CSA C22.2#61730-2:2019 Ed.2, IEC 61215-1:2016 Ed.1, IEC 61215-2:2016 Ed.1, IEC 61730-1:2016 Ed.2, IEC 61730-2:2016 Ed.2 certification. A list of products including SIL-XXX BK, SIL-XXX HC, SIL-XXX HN have UL 1703 and ULC ORD C1703 certifications. These UL and IEC to be freestanding. To satisfy the listing for this product the modules must be mounted with a rack or standoff structure. The UL and IEC listing does not include integration into a building surface because additional requirements may apply. The module is considered to be in compliance with UL 1703, IEC 61215/61730 and UL 61215/61730 only when the module is mounted in the manner specified by the mounting instructions contained in this document.

5. LIMITED WARRANTY

Please refer to Silfab General Terms and Conditions of Sale for details of the module's limited warranty. Failure to comply with this Safety and Installation Manual would void Silfab Warranty for the PV modules as stated in the General Terms and Conditions of Sale.

6. MODULE SPECIFICATION

Please refer to the appropriate DATASHEETS for electrical performance data and mechanical installation information.

7. SAFETY PRECAUTIONS

Installation should be performed only by authorized personnel.

All installations must comply with the applicable geographic electrical standards. I.e. International, National, Regional and local electrical standards etc.

Within the modules there are no user serviceable parts. Do not attempt to repair any part of the modules. Do not use or install broken modules.

In order to reduce the risk of electric shock, prior to installing the modules, remove metallic jewelry and use insulated tools during installation.

Modules produce voltage even when not connected to an electrical circuit or load and have no on/off switch. Modules can be rendered inoperative only by removing them from sunlight, or by fully covering their front surface with cloth, cardboard, or other completely opaque non-marking material, or by working with them face down on a smooth, flat surface.

- Do not expose the modules to artificially concentrated sunlight.
- Do not stand on, drop, scratch, or allow objects to fall on the modules.
- Do not lift the modules by the junction box or junction box cables.
- Do not install or handle the modules when they are wet or during periods of high winds. Modules in Silfab packaging should not be kept outdoors for a period exceeding 60 days.
- Ensure that junction box cables are provided with strain relief to avoid damage to the junction box, maintaining a minimum bending radius of 50 mm at all locations along the cable.
- Do not leave cable connectors exposed in adverse climatic conditions. Water and dust deposits inside the cable connectors can cause long term damage.

A module with broken glass, torn or cut backsheet, damaged junction box, connectors or cables present electrical safety hazards and must be removed from service.

The total voltage of modules connected in series corresponds to the sum of the voltages of the single modules; whereas connecting the modules in parallel results in adding up the currents. Consequently, strings of inter-connected modules can produce high voltages and high currents and constitute an increased risk of electric shock and may cause injury or death.

For installation, maintenance, or before making any electrical connection or disconnection, ensure all modules in the PV array are exposed to a light intensity that is less than 400W/m^2 as measured by an accurate solarmeter/ pyranometer.

Methods to reduce solar irradiance when making electrical connections or disconnections include:

- Covering the modules with an opaque cloth or other material in order to shield them from exposure.
- Making the connections during hours of low intensity of solar irradiance (such as early morning or late afternoon).

8. INSTALLATION

8.1 Module Mounting Overview

The fire rating of Silfab modules is valid only when mounted in the manner specified in the mechanical mounting instructions.

When installing Silfab modules, local building code requirements and regulations must be adhered to at all times. In case of roof mounting, the appropriate system fire class rating of PV module with Mounting system in combination with roof covering and slope applications should be considered. Silfab modules are fire rating Type 1 or Type 2 in accordance with UL 1703 and/ or UL61730. For more information about the specific product, please check DATASHEET or www.silfabsolar.com.

Sufficient ventilation of the module backside is required to maintain the Type 1 or 2 fire rating, and therefore the mounting configuration (e.g. sufficient clearance) should be adapted accordingly. The recommended clearance distance is a minimum 10 cm (3 15/16”).

To maximize the rate of energy conversion, modules have to be installed in the best orientation and tilt according to your region. To prevent solar module hot spots and/or reduction in power, find a location that has the lowest shading.

Avoid low tilt angles to prevent the accumulation of dirt/debris along the module edge.

Modules must be spaced a minimum 10 mm (3/8”) a part on all sides to provide space for thermal expansion and to provide ventilation.

Do not drill any additional holes into the module frames and do not cover the drainage holes.

Do not mount Silfab modules in a position where the junction boxes are “upside down” (leads facing upwards).

8.2 Module Mounting Method using mounting holes

Each module must be securely fastened at a minimum of 4 points.

Only use the 4 pre-drilled mounting holes (slots, see Figures 3 and 5) on the PV module frame to bolt the module with M6 (1/4”) stainless steel screws and nuts to the mounting framework.

The distance of the mounting holes has been designed in order to result in a uniform wind and snow load without damaging the module.

⊘ Do not drill additional holes in the module frame; doing so will void the Warranty.

8.3 Mounting using clamping method

Silfab recommends the use of clamps with a design as shown in Fig. 4a (or equivalent). The use of improper clamps will void the Warranty.

- These modules can be installed in either Portrait (vertical) or Landscape (horizontal) configuration. Refer to Fig. 4 b, c, and d for an example of attaching the modules to a support structure using mounting clamps. Use stainless steel fastening hardware.
- These modules can be mounted on continuous base structures (inclined or horizontal) such as rails or similar.
- Both base structures must be mounted at the same distance from the symmetrical axis (portrait or landscape) of the module.
- Placing the supporting elements according to the mounting instructions on the following pages in order to maintain a correct load distribution and achieve the design and test load rating based on the UL1703 and/or IEC 61215.
- When clamping the modules on a support structure, refer to the following pages that identify mounting locations and associated load ratings.

8.4 Mounting Using rear flange mounted clamping hardware (e.g. CAMO clamp / IronRidge, PanelClaw / Esdec)

Silfab recommends the use of rear flange mounted clamping hardware with a design as shown in Fig. 4 e. The following conditions have to be applied in order to receive coverage under Silfab’s Warranty:

- Rear flange mounted clamping hardware is allowable only for the following Silfab product lines: (SIL-XXX BK/BG/HC/HC+/ HN/HM/QM/XM/XM+/QD).
- Bars or rails must run parallel to the module’s short frame edge, and they must be placed outside of the mounting holes (minimum of 15mm away from the edge of the mounting hole).

8.5 Orientation and Tilt

The highest energy yields are achieved when sunlight shines perpendicularly (at 90°) to the surface of the PV modules. To maximize system output, panels should be installed at the optimum orientation and tilt angle, which depends on location and on local conditions. The optimum orientation can be calculated by a qualified system design engineer(s). It is recommended that all panels in one string have the same orientation and tilt to ensure the system does not underperform due to mismatched outputs. Dependent on location, rainfall and pollution levels - a lower angle of installation potentially increases the requirement for regular cleaning.

RECOMMENDED

A photovoltaic system composed of Silfab modules mounted on a UL2703 certified mounting system should be evaluated in combination with roof coverings in accordance with UL 1703 and/or IEC 61215 standard meet the requirements to achieve the specified System Fire Type designation for a non-BIPIV module or panel.

For instance, if a listed mounting system with Class A System rating is installed with type 1 modules, the photovoltaic system is suitable to maintain the System Class A Fire Rating.

Any mounting system limitations on inclination or accessories required to maintain a specified System Fire Class Rating should be clearly specified in the installation instruction and UL2703 certification of the mounting system supplier.

Recommended clearance distance of 115mm (4.5inch) (recommended) between module frame and the surface of the wall or roof. Other mounting techniques may affect the UL Listing or the fire class ratings.

Fig. 4a: cross section of a mounting clamp to be used for attaching the modules to support structure (minimum length is 40 mm).

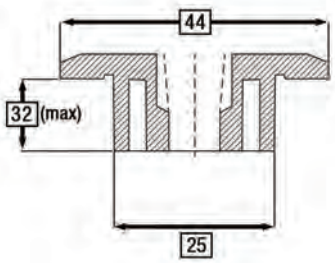

Fig. 4b: modules attached to supporting structure (rail, item 01) using a clamp (item 02) fixed with a bolt (item 03) and nut (item 04) – view between two modules.
1 Rail 2 Clamp 3 Bolt 4 Nut

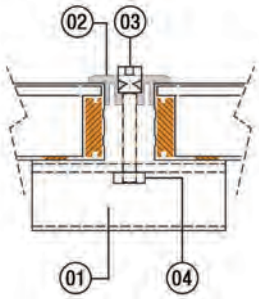

Fig. 4c: modules attached to supporting structure – side view

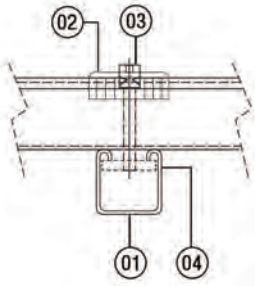

Fig. 4d: end of module row with additional spacer (item 05: 50mm x 30mm x 24mm)

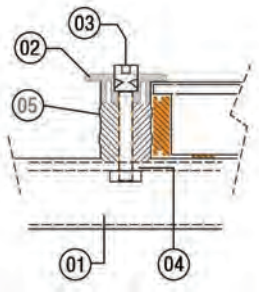

Fig. 4e: Example CAMO clamp, a type of rear flange mounted clamping hardware. Clamp slides into the rail channel and the bonding pins contact the rear module flange. CAMO hidden end clamp. Clamp slide into rail channel and the bonding pins contacts the module flange edge.

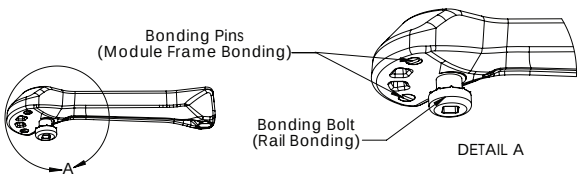

SILFAB ELITE

MOUNTING FOR SIL BK

Allowed positions for fixing the **SIL BK** module using mounting clamps.

Mounting must stay WITHIN the coloured areas.

= **Long Edge Primary Mounting Zone**

= **Long Edge Secondary Mounting Zone**

= **Short Edge Mounting Zone**

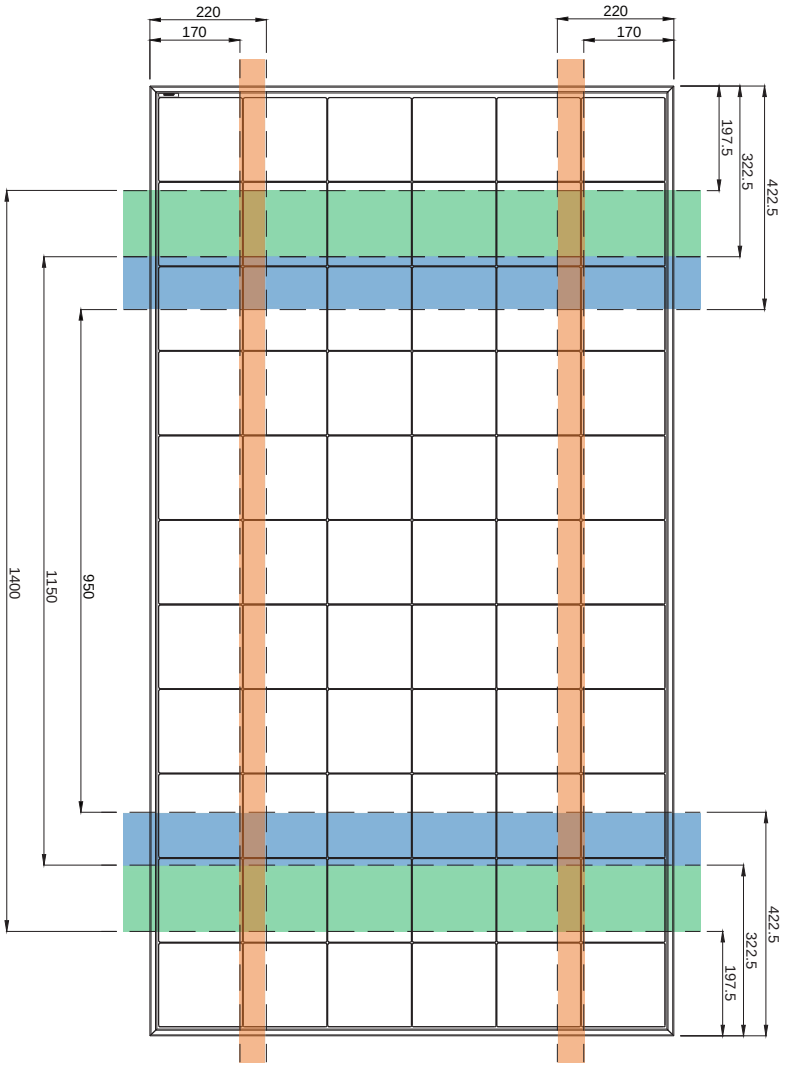

ATTENTION:

In the case of installation with modules in the portrait configuration, install the modules with the junction boxes at the top in their “upright” position. This will reduce the risk of moisture ingress into the junction box.

SIL BK

MOUNTING TYPE	MOUNTING POSITION	MOUNTING ZONE	DESIGN LOAD RATING*	TEST LOAD RATING
Clamp / Mounting Holes	Long Edge Primary	322.5mm-422.5mm	+3600Pa/ -2667Pa	+5400Pa/ -4000Pa
Clamp	Long Edge Secondary	197.5mm-322.5mm	+2667Pa /-1600Pa	+4000Pa /-2400Pa
Clamp	Short Edge	170mm-220mm	+1600Pa /-1470Pa	+2400Pa /-2200Pa

*Positive values correspond to downward forces, Negative Values correspond to uplift forces

SILFAB ELITE

MOUNTING FOR SIL BG

Allowed positions for fixing the **SIL BG** module using mounting clamps.

Mounting must stay WITHIN the coloured areas.

= **Long Edge Primary Mounting Zone**

= **Long Edge Secondary Mounting Zone**

= **Short Edge Mounting Zone**

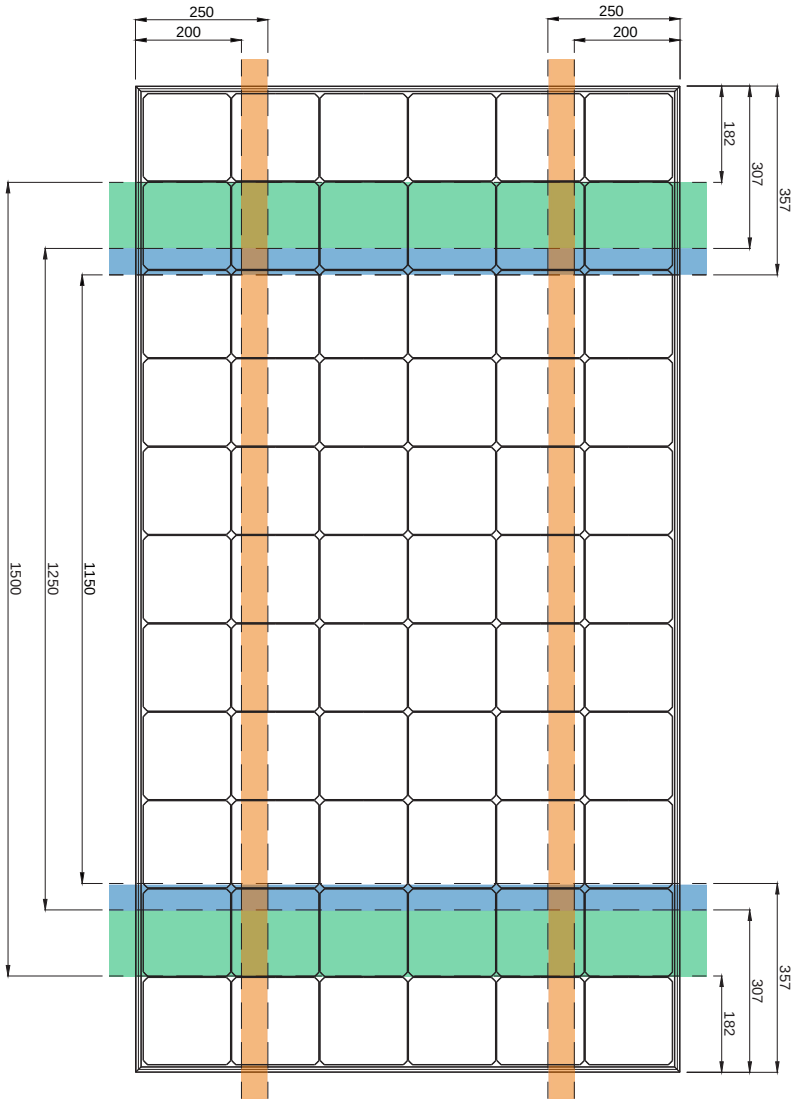

ATTENTION:

In the case of installation with modules in the portrait configuration, install the modules with the junction boxes at the top in their “upright” position. This will reduce the risk of moisture ingress into the junction box.

SIL BG

MOUNTING TYPE	MOUNTING POSITION	MOUNTING ZONE	DESIGN LOAD RATING*	TEST LOAD RATING
Clamp / Mounting Holes	Long Edge Primary	307mm-357mm	+3600Pa/ -3600Pa	+5400Pa/ -5400Pa
Clamp	Long Edge Secondary	182mm-307mm	+2667Pa /-1600Pa	+4000Pa /-2400Pa
Clamp	Short Edge	200mm-250mm	+1600Pa /-1470Pa	+2400Pa /-2200Pa

*Positive values correspond to downward forces, Negative Values correspond to uplift forces.

SILFAB PRIME

MOUNTING FOR SIL HC

Allowed positions for fixing the **SIL HC** module using mounting clamps.

Mounting must stay WITHIN the coloured areas.

= **Long Edge Primary Mounting Zone**

= **Long Edge Secondary Mounting Zone**

= **Short Edge Mounting Zone**

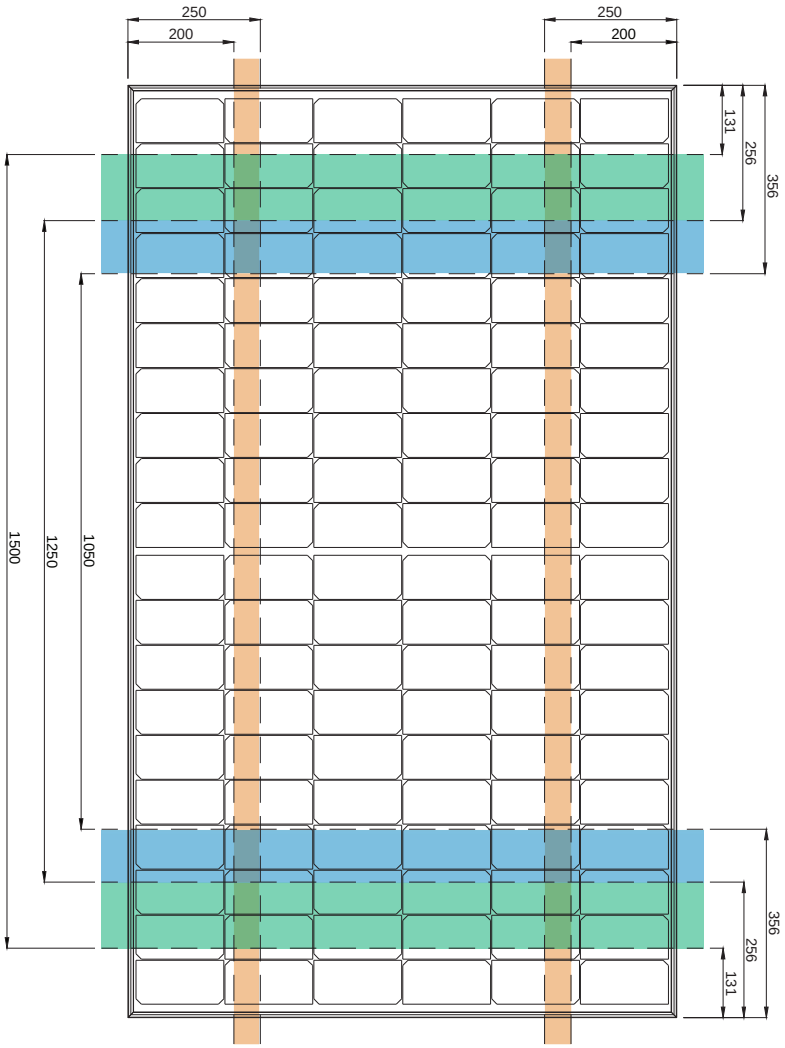

ATTENTION:

In the case of installation with modules in the portrait configuration, install the modules with the junction boxes at the top in their “upright” position. This will reduce the risk of moisture ingress into the junction box.

SIL HC

MOUNTING TYPE	MOUNTING POSITION	MOUNTING ZONE	DESIGN LOAD RATING*	TEST LOAD RATING
Clamp / Mounting Holes	Long Edge Primary	256mm-356mm	+3600Pa/ -3600Pa	+5400Pa/ -5400Pa
Clamp	Long Edge Secondary	131mm-256mm	+2667Pa /-1600Pa	+4000Pa /-2400Pa
Clamp	Short Edge	200mm-250mm	+1600Pa/ -1600Pa	+2400Pa/ -2400Pa

*Positive values correspond to downward forces, Negative Values correspond to uplift forces.

SILFAB PRIME

MOUNTING FOR SIL HC+

Allowed positions for fixing the **SIL HC+** module using mounting clamps.

Mounting must stay WITHIN the coloured areas.

= **Long Edge Primary Mounting Zone**

= **Long Edge Secondary Mounting Zone**

= **Short Edge Mounting Zone**

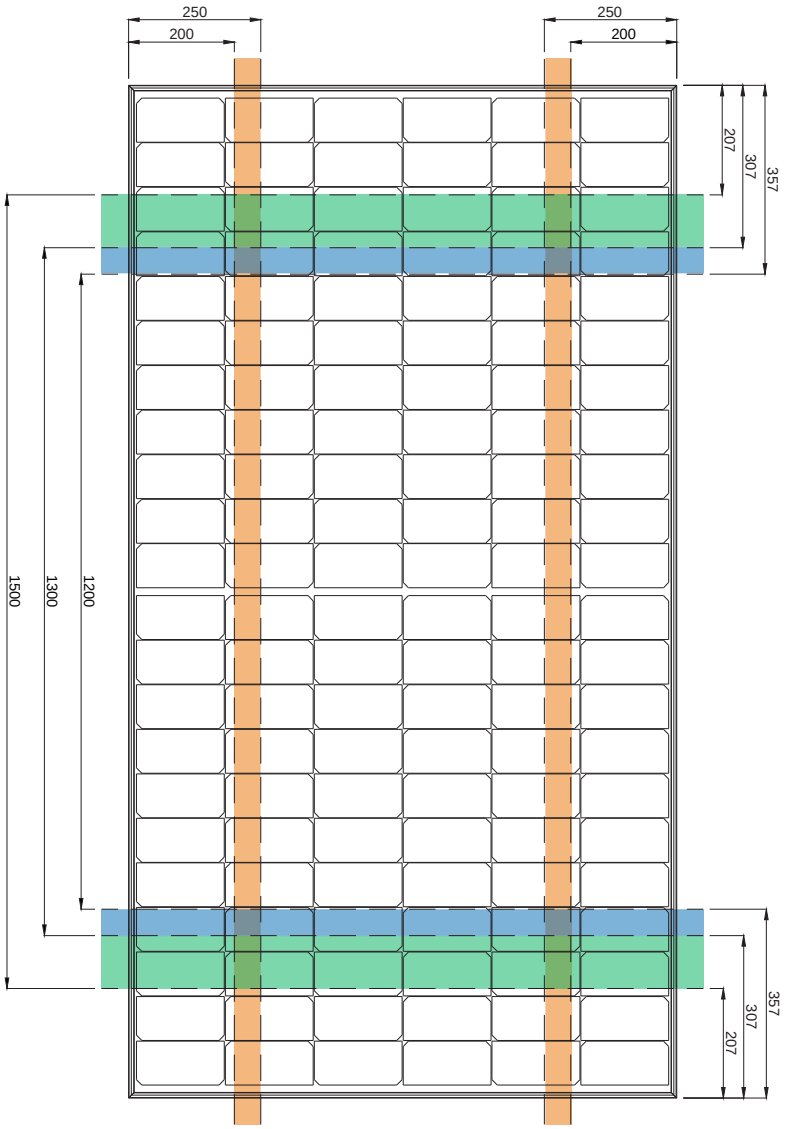

ATTENTION:

In the case of installation with modules in the portrait configuration, install the modules with the junction boxes at the top in their “upright” position. This will reduce the risk of moisture ingress into the junction box.

SIL HC+

MOUNTING TYPE	MOUNTING POSITION	MOUNTING ZONE	DESIGN LOAD RATING*	TEST LOAD RATING
Clamp / Mounting Holes	Long Edge Primary	307mm-357mm	+3600Pa/ -3600Pa	+5400Pa/ -5400Pa
Clamp	Long Edge Secondary	207mm-307mm	+2667Pa /-1600Pa	+4000Pa /-2400Pa
Clamp	Short Edge	200mm-250mm	+1600Pa/ -1600Pa	+2400Pa/ -2400Pa

*Positive values correspond to downward forces, Negative Values correspond to uplift forces.

SILFAB PRIME

MOUNTING FOR SIL QD

Allowed positions for fixing the **SIL QD** module using mounting clamps.

Mounting must stay WITHIN the coloured areas.

- = **Long Edge Primary Mounting Zone**
- = **Long Edge Secondary Mounting Zone**
- = **Long Edge Third Mounting Zone**
- = **Short Edge Mounting Zone**

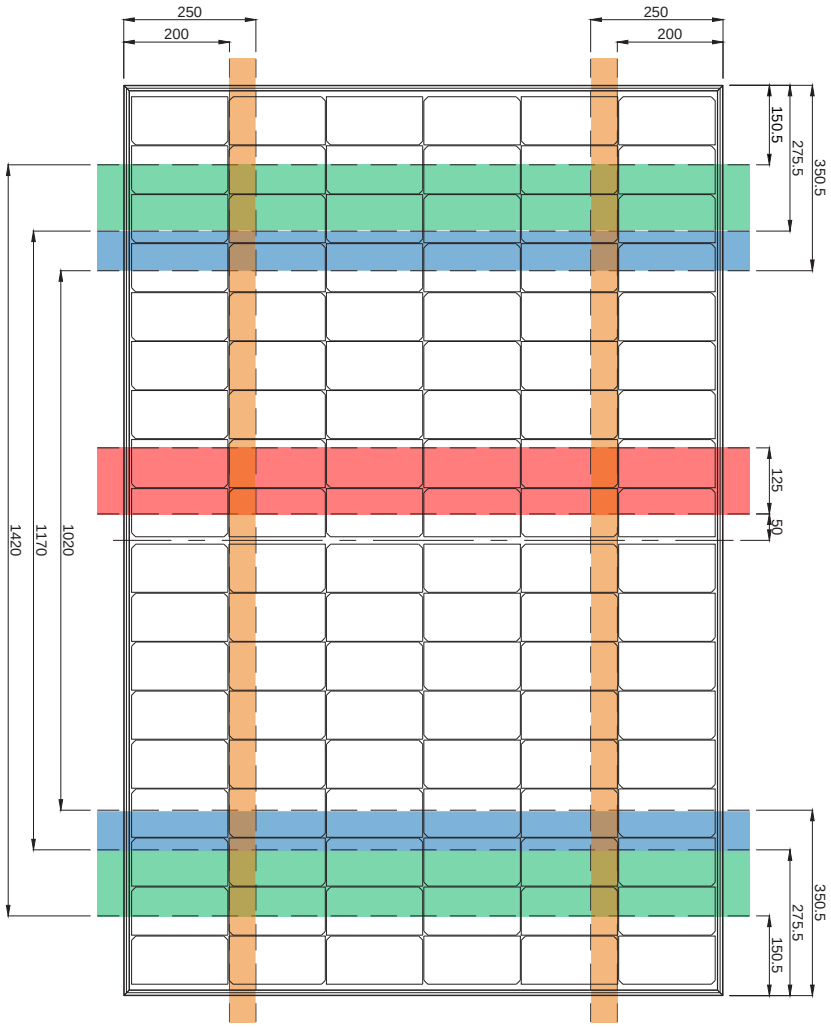

ATTENTION:

In the case of installation with modules in the portrait configuration, install the modules with the junction boxes at the top in their “upright” position. This will reduce the risk of moisture ingress into the junction box.

SIL QD

MOUNTING TYPE	MOUNTING POSITION	MOUNTING ZONE	DESIGN LOAD RATING*	TEST LOAD RATING
Clamp	Long Edge Primary	275.5mm-350.5mm	+3600Pa/ -2667Pa	+5400Pa/ -4000Pa
Clamp	Long Edge Secondary	150.5mm-275.5mm	+2667Pa /-2400Pa	+4000Pa /-3600Pa
Clamp	Long Edge Three Rails	150.5mm-350.5mm and red zone	+3600Pa/ -3600Pa	+5400Pa/ -5400Pa
Clamp	Short Edge	200mm-250mm	+1600Pa/ -1600Pa	+2400Pa/ -2400Pa

*Positive values correspond to downward forces, Negative Values correspond to uplift forces.

SILFAB COMMERCIAL

MOUNTING FOR SIL HN

Allowed positions for fixing the **SIL HN** module using mounting clamps.

Mounting must stay WITHIN the coloured areas.

= **Long Edge Primary Mounting Zone**

= **Long Edge Secondary Mounting Zone**

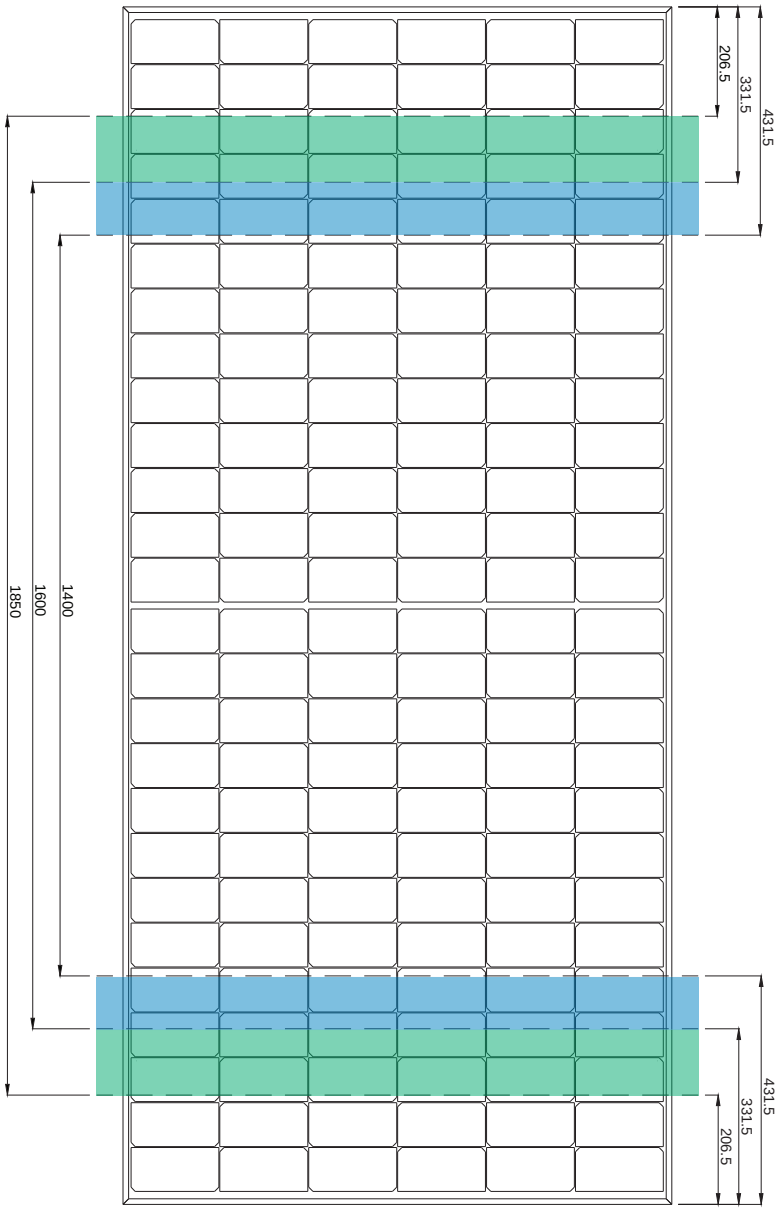

ATTENTION:

In the case of installation with modules in the portrait configuration, install the modules with the junction boxes at the top in their "upright" position. This will reduce the risk of moisture ingress into the junction box.

SIL HN

MOUNTING TYPE	MOUNTING POSITION	MOUNTING ZONE	DESIGN LOAD RATING*	TEST LOAD RATING
Clamp / Mounting Holes	Long Edge Primary	331.5mm-431.5mm	+3600Pa/ -1600Pa	+5400Pa/ -2400Pa
Clamp	Long Edge Secondary	206.5mm-331.5mm	+1600Pa /-1600Pa	+2400Pa /-2400Pa

*Positive values correspond to downward forces, Negative Values correspond to uplift forces.

SILFAB COMMERCIAL

MOUNTING FOR SIL HM, QM and XM

Allowed positions for fixing the **SIL HM, QM** and **XM** module using mounting clamps.

Mounting must stay WITHIN the coloured areas.

= **Long Edge Primary Mounting Zone**

= **Long Edge Secondary Mounting Zone**

= **Long Edge Third Mounting Zone**

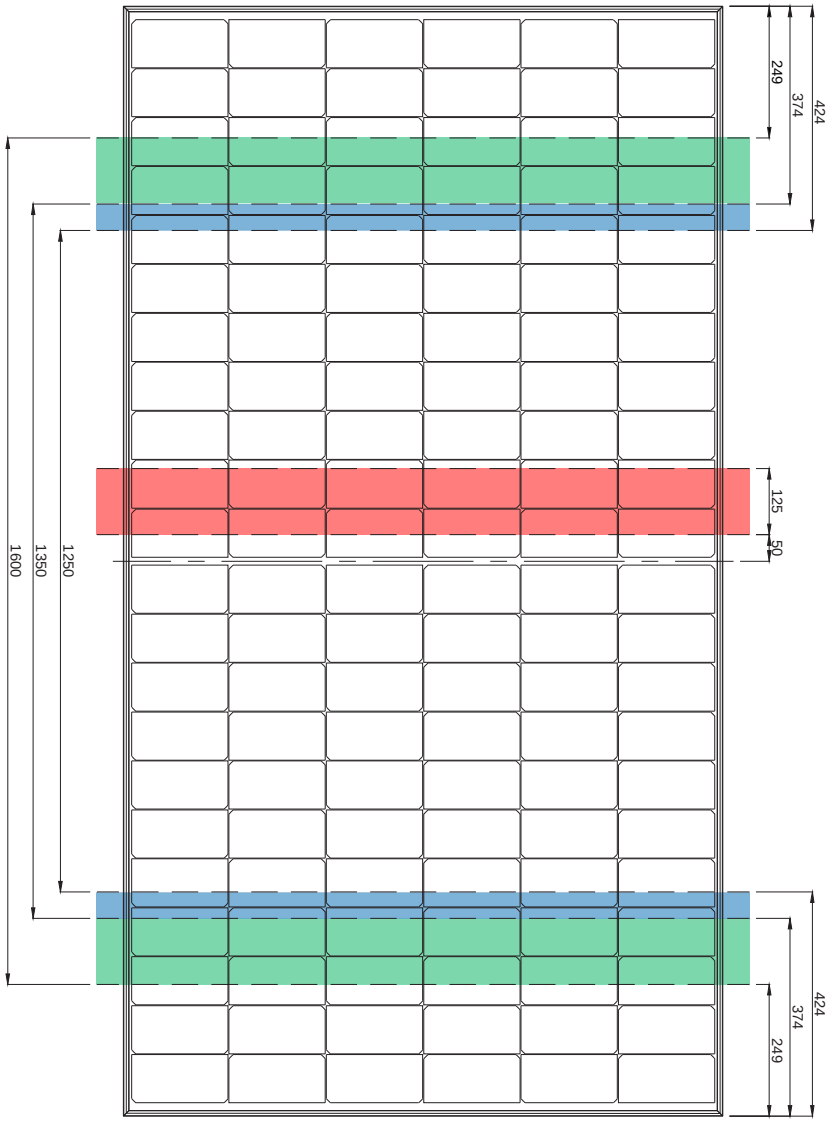

ATTENTION:

In the case of installation with modules in the portrait configuration, install the modules with the junction boxes at the top in their "upright" position. This will reduce the risk of moisture ingress into the junction box.

SIL HM/QM/XM

MOUNTING TYPE	MOUNTING POSITION	MOUNTING ZONE	DESIGN LOAD RATING*	TEST LOAD RATING
Clamp/Mounting Hole	Long Edge Primary	374mm-424mm	+3600Pa/ -1600Pa	+5400Pa/ -2400Pa
Clamp	Long Edge Secondary	249mm-374mm	+1600Pa /-1600Pa	+2400Pa /-2400Pa
Clamp	Long Edge Three Rails	249mm-424mm and red zone	+3600Pa/ -2667Pa	+5400Pa/ -4000Pa

*Positive values correspond to downward forces, Negative Values correspond to uplift forces.

SILFAB COMMERCIAL

MOUNTING FOR SIL XM+

Allowed positions for fixing the **SIL XM+** module using mounting clamps.

Mounting must stay WITHIN the coloured areas.

= **Mounting Rail**

= **Clamp**

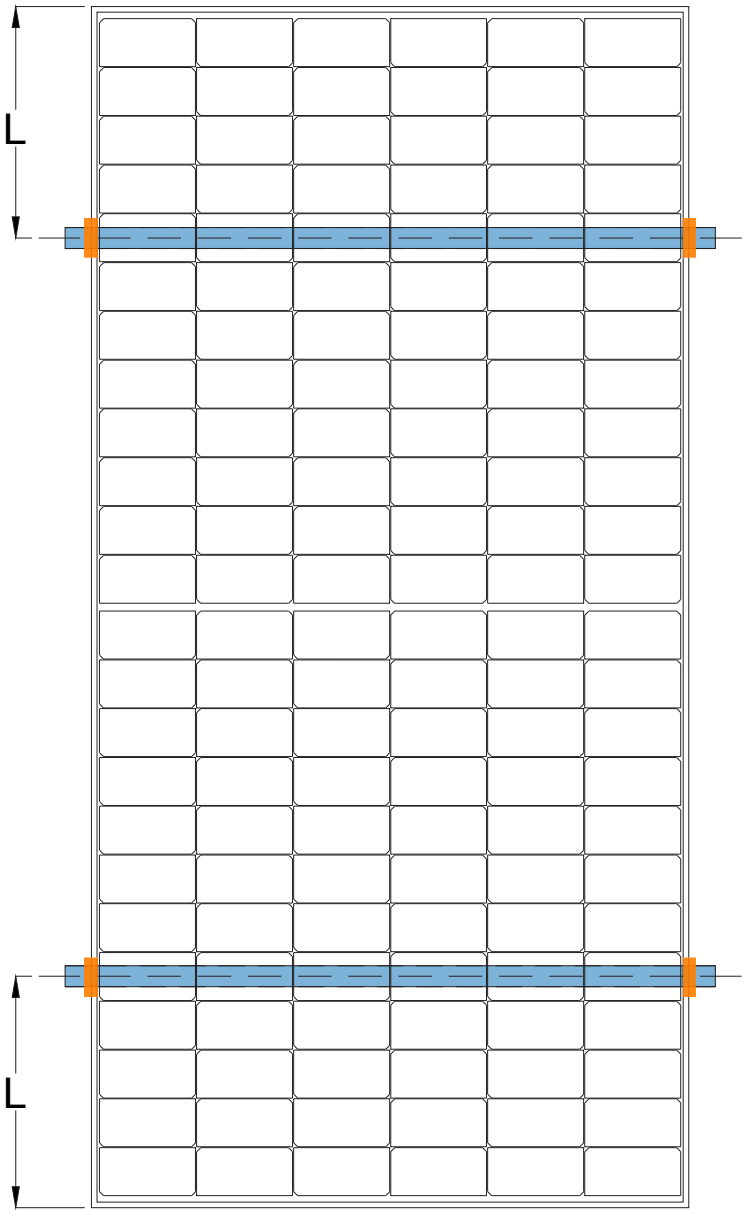

ATTENTION:

In the case of installation with modules in the portrait configuration, install the modules with the junction boxes at the top in their "upright" position. This will reduce the risk of moisture ingress into the junction box.

SIL XM+

MOUNTING TYPE	CLAMP POSITION		DESIGN LOAD RATING*	TEST LOAD RATING
4 Clamps on Long Side 2 Continuous Rails Parallel to Short Side	L	13.8 - 19.7 in (350 - 500 mm)	+2400Pa/ -1600Pa	+3600Pa/ -2400Pa

*Positive values correspond to downward forces, Negative Values correspond to uplift forces.

9. HANDLING OF MODULES

The Silfab modules are robust, but cells may be subject to damage if the modules are improperly handled or installed.

Wear protective gloves when handling and installing the modules to protect against cuts and burns.

Handle the module in a way that avoids breakage or scratching of the glass or backsheet and mechanical damage to any other part of the module.

Do not carry the module by its cables. Electric shock or damage to the module may result.

Do not drop sharp or heavy objects on either surfaces of the module.

Do not subject the modules to any impact, and do not flex them mechanically.

In the event of any damage to either the front or the back of the module, dangerous electrical hazards may exist, especially if the module is connected in series to a string. Replace the module immediately and take extreme caution when handling.

Do not step or stand on the PV Module.

9.1 Electrical Connection

Do not connect or disconnect modules under load! Danger! Risk of serious injury or death from electric shock or electric arc flash!

Only connect modules with the same rated current in series and modules with the same rated voltage in parallel.

High hazardous voltage (several hundreds of volts) may occur during installation. Consequently, installation and maintenance of the modules, as well as the connection to the main power supply, may only be performed by authorized and qualified persons.

Under normal conditions, a PV module is likely to experience conditions that produce more current and/or voltage than reported at standard test conditions. Accordingly, the values of Isc and Voc marked on the module should be multiplied by an appropriate safety factor to be determined by the design engineer based on local electrical code requirements. As a worst case, use a safety factor of 1.25 for voltage and cable ampacities and a safety factor of 1.56 for fuse sizing.

For SIL-XXX BK/BG/HC/HC+/QD, the maximum system voltage rating is 1000V for TUV/IEC and 1000V for UL. For SIL-XXX HN/HM/QM/XM/XM+, the maximum system voltage rating is 1500V.

The maximum series fuse rating is 20A.

The bypass diodes are not over-current protection devices. In the event of known or suspected diode failure, installers or maintenance providers should contact Silfab. Never attempt to open the junction box!

To obtain the desired system voltage, modules are wired in series connection. The recommended maximum series configuration must NOT exceed the certified maximum system voltage stated in the module spec sheets calculated in the worst case Voc conditions to be determined by the engineer of record (EOR).

*Refer to the appropriate local geographic electrical codes and regulations for the correct Voc correction factor according to the respective temperatures. If this information is not available, a 1.25 multiplying factor can be used as default value for correction of Voc.

For connection of the modules use only appropriate cables with a minimum conduct cross-section of 4 mm^2 that is compliant to the relevant jurisdiction code.

Verify the junction box lid is firmly closed before installing the module.

Do not repair or reconnect junction box cable. It may occur spark or electric shock.

Do not bend junction box cable. Under stress, it can damage the module. Cable bending radius should be at least more than 4 times the cable diameter.

Before connection of the system to the grid, the PV system must be approved for correct installation, by all appropriate authorities.

Lightning protection is recommended for PV systems that are to be installed in locations with high probability of lightning strikes.

The design of the PV system should be done by a qualified person familiar with PV system design. Silfab does not assume any responsibility for how the modules are installed or how the system is designed.

For all solar systems, the connectors MUST be UL rated for interminability and fully inter-matable with Silfab modules' connectors. Otherwise, Silfab will void the warranty and will not be responsible for any resulting safety issue.

Silfab solar modules are equipped with factory-assembled Junction box with 12AWG/4mm^2 cables, and insulated for 90°C maximum, with either either MC4 or EV2 connectors. Any attempt to repair/modify the junction box, cable, or connector will void the Silfab Solar warranty.

9.2 Functioning Grounding

For installations located in tropical regions (between 23.5o N and 23.5o S), functional grounding at the negative pole of the DC side of the system must be implemented.

- Ensure the difference in potential between the negative pole of the DC array and the negative end of the DC side of the inverter input terminals is 0V.
- Follow the directions of the inverter manufacturer and prevailing local regulations.
- Only use inverters which include licensed grounding kits.
- Functional grounding is required to be implemented in installation sites with increased salt content in the air. (e.g. close the sea, defined as less than 500m from a coastline).

9.3 Protective Grounding

In order to prevent electrical shock or fire, the frame of the module as well as any non-current carrying metal parts of the system must be electrically grounded. While this section provides some information about grounding Silfab's frames and modules, reference should be made to local statutes and regulations for specific requirements on grounding. As an additional resource, reference the U.S. National Electrical Code addresses equipment grounding/bonding requirements in Article 250. You may also reference Canadian Electrical Code requirements located in CSA C22.1.

Proper grounding is achieved by bonding all exposed non-current carrying conductive parts to the appropriately sized equipment grounding conductor (EGC) or racking/rail system that has been tested and verified to be used as a means of integrated grounding.

Silfab's frames are protected from corrosion via an anodized coating. This coating must be penetrated in order to ensure proper bonding for equipment grounding requirements. The different methods outlined below are suggested methods to establish an appropriate bond between the frame and the EGC or racking system. The installer must ensure that the ground path of the EGC or racking system follows proper grounding requirements.

Option A: Use of a grounding lug

A UL listed grounding lug can be bonded to the grounding hole located on the bottom flange of Silfab's module frame. The holes are marked with an electrical ground symbol. ⏚

To install the grounding lug, follow the specified instructions of the manufacturer. The grounding lug should be made of stainless steel or tin plated metals such as aluminum to avoid corrosion. The grounding lug should be attached to the frame grounding hole using stainless steel hardware (screw, toothed lock washer or KEPS nut). A lock washer or other locking mechanism is required to maintain tension between the bolt and assembly; Silfab recommends a torque value of 25inch-lbs. The conductor must be attached to the ground lug using the lug's set screw. Refer to NEC Article 690. Care should be taken to avoid the use of grounding hardware of dissimilar metals which may lead to corrosion. Ensure that the grounding area for the connection is clean and free from oxides and/or any debris that could impede the pathway for the electrical ground. Always follow safety procedures when installing any grounding/mounting system.

Option B: Integrated grounding methods

A Silfab module can be bonded with a racking/rail system using a UL2703 certified integrated grounding method. The racking/rail system will then have to be electrically grounded in such a way that the overall system is properly grounded per local requirements and regulations such as what is defined in NEC article 250 or Canadian CSA C22.1.

One example of an integrated grounding method is the use of a washer recognized as meeting UL2703 requirements between the module and the racking/rail system, and is listed on UL's product database. An example of a UL2703 recognized integrated grounding method is a WEEB washer which Silfab has found to be generally compatible with Silfab modules, however each combination of module/racking system requires a specific WEEB washer size. It is the responsibility of the installer to ensure that that the specific size requirement has been met and is used appropriately per the manufacturer's installation manual. Note, WEEB washers are intended for single-use only; they must not be reused after removal or loosening. Refer to Wiley's installation instructions for the specific use of WEEB washers.

Other grounding methods may be used in conjunction with a module mounting system tested to UL2703. For these installations, the Silfab module and frame style must be tested and part of the instructions for the listed mounting product. The Silfab module must be installed in accordance with these instructions as well as the mounting system's listed instructions.

As a final reminder, both Option A and Option B must be grounded as per NEC Article 250 or CSA C22.1, whichever may apply to your local jurisdictional and code requirements.

9.4 Silfab Bifacial Modules

Bi-facial modules are able to capture and convert light from both the front and back surface of the module, as shown FIGURE 6. As a result, Levelized Cost Of Electricity (LCOE) can be further reduced with bifacial technology through rear-side generation up to 20% annual gain. This section outlines the fundamental components for consideration to maximize power output of your bi-facial PV system.

Step #1: Highest Surface Reflectivity/Albedo

- Performances of bifacial PV modules are linearly dependent on the albedo.
- Best results: crushed white rock, bright white paint, or an ENERGY STAR™ roof.

Step #2: Select the optimum height of installation & mounting structure

- Elevate the module above as much as possible, as it will capture more ground-reflected light.
- For flat ground/rooftop installation it's recommended a minimum height of 50-70 cm (19 11/16 – 27 9/16").
- Avoid shading the back side of the module from the support rack as much as possible.

Step #3: Tilt angle of modules

- Case-by-case based on site location. For site specific energy yield analysis and power reports, please contact Silfab Solar.

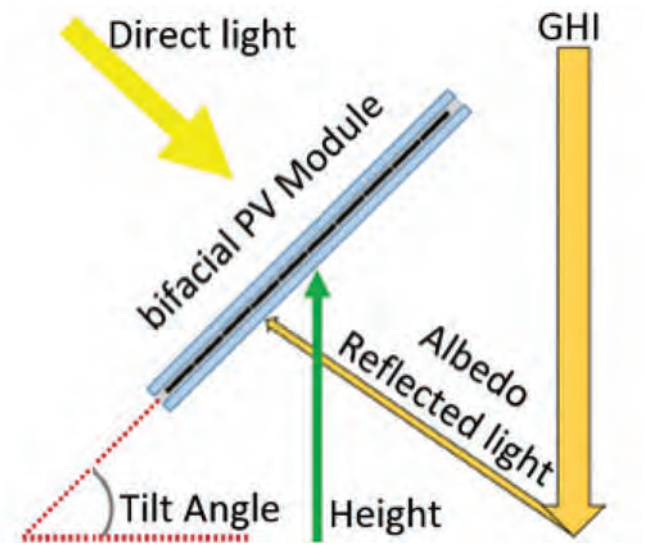

Fig. 6: Bifacial solar module

IMPORTANT NOTE: ELECTRICAL CONNECTION

With an expected gain of power (Pmp) and current (Isc) from the rear due to significant light contribution, i.e from a high albedo background, the user/designer must consider the electrical performance of both front and irradiance % on backside for the following below. It's suggested at least +20% bifaciality gain.

- Wire and string sizing
- Inverter short-circuit current input limit
- Overcurrent protection device

TIP: With multi-row structures, connect horizontal series of modules to different MPPT to reduce losses due to mismatch on reflected light on back side.

9.5 Silfab Module Installation in Marine Applications

This section provides guidance of safe handling and installation of Silfab PV modules less than 500 meters to any salt water coastal waterway regarded as "near-coastal". Improper care and negligence to properly protect PV system as recommended may potentially induce salt-mist corrosion and accelerate electrical insulation losses and galvanic corrosion. Silfab reserves the right to review any potential warranty claims in "near-coastal" environments against a customer's strict adherence to the best practices and recommendations provided in this section. Any non-conformances found will potentially disqualify the product from being covered under Silfab's Limited Product and Linear Performance Warranty. For further inquiries please contact Silfab's Customer Service.

Mechanical Installation

- Do not scratch or break the corrosion-resistant coating (e.g. anodization layer) on PV Modules and mounting system unless it is part of the electrical equipment grounding system (grounding lugs, integrated grounding hardware compliant to UL2703).
- Use corrosion-resistant material (e.g. stainless steel SUS 316) for components (e.g. nuts, bolts, gaskets, etc.) to install your PV system.
- For safe mounting installation, use insulation gaskets between mounting hardware attached to the PV module frame between PV module frame and rail, unless the mounting hardware is part of the electrical equipment grounding system using integrated mounting/grounding hardware that is compliant with UL2703.
- Recommendation for gasket insulation are mica lamination, or silicone, or fluoride made insulating material.

Grounding

- Silfab recommends to protect any exposed grounding points (such as a grounding block) of the PV system with a corrosion-resistant coating, for example (a) Butyl Plaster to completely cover an exposed grounding block or (b) spray fluorocarbon varnish of 40 um thick onto exposed ground blocks thoroughly to form an anti-corrosion protective film.

  Remember to clean the exposed grounding block and sur rounding area and make sure the surface is dry. Any exposed components must be fully covered from exposure to salt.

To ensure optimum module performance, Silfab recommends maintenance service every three months with the following measures:

- Check the module frame, mounting system, grounding block and junction areas for potential signs of corrosion.
- Clean the module frame, mounting system, grounding block and junction areas from accumulation of dust and/or salt with soft foam materials, non-woven fabrics, whisks, soft sponges, soft brushes and hair brushes may be used.
- Upon possible finding of corrosion due to salt, re-apply Butyl Plaster or fluorocarbon varnish to cover rusty area thoroughly.

IMPORTANT NOTE: DISCLAIMER OF LIABILITY

Silfab PV Modules have successfully passed IEC 61701:2011 – Level 5 Salt Mist Corrosion Test. However, full protection against salt exposure is largely dependent on multiple components of the PV system beyond Silfab's control. As such, Silfab strongly recommends to adhere to the installation procedure. If negligence is found, Silfab cannot hold responsibility and disclaim liability for any loss, damage, or expense arising out from "near-coastal" installation.

10. MAINTENANCE

Cleaning method of ARC-Glass of Silfab PV Module

Silfab uses anti-reflective coated glasses for maximum performance. It is recommended to regularly clean the modules to ensure maximum power output.

Module cleaning should be done in the early morning, in the evening, at night or on rainy days when solar irradiance is low.

Detailed description:

- Do not touch the glass with bare fingers or hands. Wear clean gloves to prevent fingerprints and other dirt from staying on the glass.
- Do not use metal tools, such as blades, knives, steel wood and other abrasive materials. Cleaning the glass with hard surface will scratch the ARC-glass.
- Do not use high pressure washers, abrasive brushes, powders, cleaners, polishers, sodium hydroxide, benzene, nitro-thinners, acid or alkali and other chemical substances. Doing so may damage the anti-reflective coating that is present on the glass of the modules and void warranty.
- All types of commercial glass cleaners, or alcohol/ ethanol/ methanol can be used.

Routine steps of cleaning:

1. Whisking: Debris such as dust and leaves on module surface should be removed with dry cloth.
2. Scraping: hard foreign matters such as dirt, bird droppings, plant branches, etc., should be scraped off with non-woven fabric or hair brush.
3. Washing: Colored substances, such as bird dropping, plant juices, etc., on module surface can be removed by cleaning by spraying water onto the dirty region and scraping with hair brush or non-woven fabric. The pressure of the cleaning water should be less than 690Kpa (100 PSI).
4. Cleaning of snow: Silfab modules can withstand heavy snow pressure up to 5400 Pascal. Do not try to remove frozen snow or ice from the module. Use a brush to gently remove the snow.

11. DIAGNOSTICS & TROUBLESHOOTING

The strict quality controls in Silfab Solar's manufacturing facility ensures all of our modules are sold free of significant defects, breakages and/or other problems. However, in its operation some problems may arise that can alter the correct operation of the modules.

In the event of accelerated deterioration of the module, Silfab Solar should be notified immediately to make the necessary replacement under the Silfab Limited warranty.

Please refer to the Silfab RMA Procedure for details on how to obtain repair or replacement service, credit or refund (as applicable) under the modules' limited warranty.

12. MODULE IDENTIFICATION

Each module is equipped with three identical serial numbers that acts as a unique identifier. They are located:

- inside the laminate under the front glass
- module frame
- on the pallet list

Moreover, each module has a specific label that is attached on the rear side. This label specifies the product information. Product label has a QR-CODE to download more information.

13. PACKAGING, HANDLING & STORAGE

13.1 Silfab's Packaging

These modules are arranged in horizontal or vertical positions as shown in Fig. 7 and 8. Transport the module in its original packaging until installation to avoid water infiltration and do not place any heavy or sharp object on the top or sides of the pallet, as it could damage the modules.

SILFAB PACKAGING DETAILS

	SILFAB ELITE	SILFAB PRIME	SILFAB COMMERCIAL
	SIL-XXX BK	SIL-XXX HC	SIL-XXX HN
Number of modules stacked	26	26	31
Modules Orientation	Horizontal	Horizontal	Vertical
Package size (L x W x H)	184 cm x 105.5 cm x 126 cm 72.4 in x 41.5 in x 49.6 in	182 cm x 109 cm x 119 cm 71.7 in x 43 in x 46.9 in	230 cm x 116 cm x 125 cm 90.5 in x 45.6 in x 49.2 in
Package weight	550 kg / 1212.5 lbs	525 kg / 1157.4 lbs	850 kg / 1874 lbs
Pallet	Wooden Pallet IPPC compliant	Wooden Pallet IPPC compliant	Wooden Pallet IPPC compliant
Packaging	Stretch Wrap Film, Containment Straps	Stretch Wrap Film, Containment Straps	Cardboard Box, Containment Straps
Module protective corners	Plastic	Plastic	Cardboard
	SIL-XXX BG	SIL-XXX HC+	SIL-XXX HM/QM/XM
Number of modules stacked	27	26	29
Modules Orientation	Horizontal	Horizontal	Vertical
Package size (L x W x H)	192 cm x 108 cm x 123 cm 75.6 in x 42.5 in x 48.4 in	197 cm x 109 cm x 119 cm 77.5 in x 43 in x 46.9 in	213cm x 106 cm x 128 cm 83.8 in x 41.7 in x 50.4 in
Package weight	620 kg / 1367 lbs	605 kg / 1334 lbs	810 kg / 1786 lbs
Pallet	Wooden Pallet IPPC compliant	Wooden Pallet IPPC compliant	Wooden Pallet IPPC compliant
Packaging	Stretch Wrap Film, Containment Straps	Stretch Wrap Film, Containment Straps	Cardboard Box, Containment Straps
Module protective corners	Plastic	Plastic	Cardboard
		SIL-XXX QD	SIL-XXX XM+
Number of modules stacked		26	29
Modules Orientation		Horizontal	Vertical
Package size (L x W x H)		177 cm x 118 cm x 119 cm 69.7 in x 46.6 in x 46.9 in	231cm x 107 cm x 128 cm 90.9 in x 42.1 in x 50.4 in
Package weight		600 kg / 1320 lbs	916 kg / 2020 lbs
Pallet		Wooden Pallet IPPC compliant	Wooden Pallet IPPC compliant
Packaging		Stretch Wrap Film, Containment Straps	Cardboard Box, Containment Straps
Module protective corners		Plastic	Cardboard

Fig. 7 Horizontal packaging of photovoltaic modules.

Fig. 8 Vertical packaging of photovoltaic modules.

Fig. 9 Protective Corner

13.2 Correct Handling of Module Packaging

Each package has been designed for safe shipment and storage of modules. The following symbols apply to the packing, with the following meanings:

KEEP PACKAGING UPRIGHT

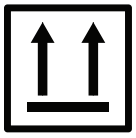

The packaging is only designed to be handled and stored with the modules sitting on the pallet as per Fig. 7. Not following these indicated directions may create forms of mechanical stress on the modules that could cause damage or breakage.

STACKING

Do not stack more than two pallets high.

AVOID EXPOSING TO RAIN OR SNOW. DO NOT LEAVE EXPOSED TO FLOODING

The plastic wrap and/or cardboard is intended to prevent temporary contact with dirt, water or other materials but will not protect the modules from damage resulting from excessive rain, snow and flooding. Modules should be stored in a sheltered dry location whenever possible. Modules are not to be stored outside for a period exceeding 60 days.

HANDLE WITH CARE

During the operation of shipping and storage of the modules use maximum care to ensure the full integrity of the modules. Hidden cell damage can result if care is not taken..

RECYCLE WHERE POSSIBLE

Any direct impact to the glass or on the corners of the modules should be avoided. Avoid flexing the laminates or applying non-distributed loads and stresses. Avoid scratching the surface of the exterior glass or backsheet. Do not apply any forces to the backsheets. Do not drop the modules or pallets from any height.

FRAGILE

Any direct impact to the glass or on the corners of the modules should be avoided. Avoid flexing the laminates or applying non-distributed loads and stresses. Avoid scratching the surface of the exterior glass or backsheet. Do not apply any forces to the backsheets. Do not drop the modules or pallets from any height.

13.3 How to Handle the Pallet

The packaged pallet must be handled with the utmost care and attention. The equipment used for handling a full packaged pallet should be rated for a minimum of 1000 kg (or 2000 kg for a double stack). The "4-way" style pallet can be handled from both the short and long sides, however, lifting from the short side will provide the best support for the modules within. For that reason, lifting from the long side should only be done by suitable equipment during loading and unloading of truck and containers. The handling equipment must be fitted with forks of appropriate length for the pallet's size (see table below).

MINIMUM FORK LENGTH FOR HANDLING OF PALLETIZED MODULES (SINGLE/DOUBLE STACKS)		
	BK/BG HC/HC+/QD	HM/HN/QM/ XM/XM+
Short Side	1.5 m / 60 in	1.8 m / 72 in
Long Side (For loading/ unloading from trucks/ containers only)	1.2 m / 48 in	1.2 m / 48 in

⚠ Verify that the package is positioned on a surface that is either flat or not excessively deformed to a point that would impart and inclination to the pallets which could damage the PV modules.

⚠ Do not aggressively lift pallets as module damage may occur.

⚠ Do not attempt to move more than one pallet at a time, unless properly secured as provided by the factory. Never attempt to move a stack of three pallets under any circumstances.

13.4 Unpacking Modules

Observe the following procedures for the unpacking of modules:

- Place the packaging on a stable and flat surface
- Using a knife carefully cut the straps and plastic wrap then remove them.
- Remove the upper cover
- Recover the packing list (for record keeping)
- Remove the PV modules and their protective corners without damaging them
- Collect and store the protective and the wooden pallets

ⓘ Note: Once you have removed the strapping the pallet must no longer be moved as the load will not be secure.

If movement of the pallet is required be sure to re-strap the pallet as per the original packaging strap locations.

13.5 Pallet Sheet

Each package has a sheet ("pallet sheet") placed in a visible position and containing some pertinent information such as: serial number of each module, part number of each module and pallet number. All Numbers are readable with a standard bar code reader. See Fig.7.

13.6 Recycling Packaging Materials

Silfab undertakes efforts to treat every aspect of production to minimize the environmental impact. The packaging is made with materials that for the most part are reusable.

In particular, the wooden pallets (Fig.10) and protective corners (Fig.11) should be retained. Arrangements for recovery will be made on a case by case basis.

Fig.10

Fig.11

Fig. 10 & 11: How to package the pallets and plastic corners, respectively, after unloading, ready to deliver back to Silfab for reuse.

14. REVISION LOG

Revision Level	Section(s) affected	Brief description of changes	Date
MAN-SSI-01	NEW DOCUMENT	For Silfab Elite/BK, Silfab Prime/HC, Silfab Commercial/HN	10/20/2021
MAN-SSI-02	Page 4	Updates to PRIME/SIL BK mounting	10/27/2021
MAN-SSI-02	Cover/Back Cover	Update Silfab Logo to registered trademark	07/01/2022
MAN-SSI-03	Multiple Sections	Addition of BG, HC+, HM information, P. 3 8.5	12/15/2022
MAN-SSI-03	Pg. 5	SIL BG - Updated Design Load Rating, Test Load Rating	03/24/2023
MAN-SSI-04	Cover, TOC, Muliple Sections	Updates include the addition of QM, QD	12/05/2023
MAN-SSI-05	pp. 8, 10	Mounting data updated to include 3 rail mounting data and illustrations for QD, HM, QM	01/23/2024
MAN-SSI-06	pp. Cover, 2, 10, 11, 15, 17	Included XM in the text.	01/31/2024
MAN-SSI-07	p. 1	Included N-type reference	04/22/2024
MAN-SSI-08	pp. Cover, 1, 2, 11, 12, 16, 18	Included XM+ data	08/09/2024
MAN-SSI-09	p. 10	Update to chart	08/23/2024

PLEASE RETAIN A COPY OF THIS MANUAL FOR FUTURE REFERENCE

To download a copy of this installation manual go to:

silfabsolar.com/downloads

SILFAB SOLAR®

WWW.SILFABSOLAR.COM

SILFAB SOLAR INC.

1770 Port Drive, Burlington WA 98233 USA | T +1 360.569.4733 | info@silfabsolar.com
7149 Logistics Lane, Fort Mill SC 29715 USA | T +1 839.400.4338
240 Courtneypark Drive East, Mississauga ON L5T 2S5 Canada | T +1 905.255.2501 | F +1 905.696.0267

SILFABSOLAR.COM

©Silfab Solar Inc., August 23, 2024. Silfab Solar® is a registered trademark of Silfab Solar Inc.

SILFAB COMMERCIAL NTC

SIL-540 XM
BIFACIAL

SILFAB SOLAR®

NEXT-GENERATION N-TYPE CELL TECHNOLOGY

- Improved Shade Tolerance
- Improved Low-Light Performance
- Increased Performance in High Temperatures
- Efficient Bifacial Energy Yield
- Enhanced Durability
- Reduced Degradation Rate
- 25-Year Product Warranty/ 30-Year Performance Warranty

SILFABSOLAR.COM

ELECTRICAL SPECIFICATIONS		540		
Test Conditions		STC	BSTC	NOCT
Module Power (Pmax)	Wp	540	589.1	398.6
Maximum power voltage (Vpmax)	V	41.62	41.62	38.28
Maximum power current (Ipmax)	A	12.97	14.15	10.41
Open circuit voltage (Voc)	V	47.95	48.00	44.11
Short circuit current (Isc)	A	13.78	15.03	11.05
Module efficiency	%	22.7%		
Maximum system voltage (VDC)	V	1500		
Series fuse rating	A	30		
Power Tolerance	Wp	0 to +10		
Bifaciality Factor	%	80±5		

Performance conditions: Measurement tolerance ≤ 3% • Standard Test Conditions (STC): 1000 W/m², AM 1.5, Temperature 25 °C • Nominal Operating Cell Temperature (NOCT): 800 W/m², AM 1.5 • Bifacial Standard Test Conditions (BSTC): 1000 W/m2 + φ × 135 W/m2 , φ = 80 % , AM 1.5 • Electrical characteristics may vary by ±5%.

MECHANICAL PROPERTIES / COMPONENTS	METRIC	IMPERIAL
Module weight	26.2 kg ±0.2 kg	57.8 lbs ±0.4 lbs
Dimensions (H x L x D)	2098 mm x 1133 mm x 35 mm	82.6 in x 44.6 in x 1.4 in
Maximum surface load (wind/snow)*	2400 Pa rear load / 5400 Pa front load	50.1 lb/ft² rear load / 112.8 lb/ft² front load
Hail impact resistance	ø 25 mm at 83 km/h	ø 1 in at 51.6 mph
Cells	132 Half cells - N-Type Silicon solar cell 91 x 182 mm	132 Half cells - N-Type Silicon solar cell 3.58 x 7.16 in
Glass	3.2 mm high transmittance, tempered, DSM antireflective coating	0.126 in high transmittance, tempered, DSM antireflective coating
Cables and connectors (refer to installation manual)	1350 mm, ø 5.7 mm, EVO2 from Staubli	53.1 in, ø 0.22 in (12AWG), EVO2 from Staubli
Backsheet	High durability, superior hydrolysis and UV resistance, multi-layer dielectric film, fluorine-free clear PV backsheet	
Frame	Anodized Aluminum (Silver)	
Junction Box	UL 3730 Certified, IEC 62790 Certified, IP68 rated, 3 diodes	

TEMPERATURE RATINGS		WARRANTIES	
Temperature Coefficient Isc	0.04 %/°C	Module product workmanship warranty	25 years**
Temperature Coefficient Voc	-0.24 %/°C	Linear power performance guarantee	30 years
Temperature Coefficient Pmax	-0.29 %/°C		≥ 98% end 1st yr ≥ 94.7% end 12th yr ≥ 90.8% end 25th yr ≥ 89.3% end 30th yr
NOCT (± 2°C)	45 °C		
Operating temperature	-40/+85 °C		

CERTIFICATIONS		SHIPPING SPECS	
Product	UL 61215, UL 61730, CSA C22.2#61730, IEC 61215, IEC 61730, IEC 61701 (Salt Mist Corrosion), IEC 62716 (Ammonia Corrosion), CEC Listing, UL Fire Rating: Type 1	Modules Per Pallet:	29 or 29 (California)
		Pallets Per Truck	24 or 23 (California)
Factory	ISO9001:2015	Modules Per Truck	696 or 667 (California)

* ⚠ Warning. Read the Safety and Installation Manual for mounting specifications and before handling, installing and operating modules.
** 12 year extendable to 25 years subject to registration and conditions outlined under "Warranty" at silfabsolar.com.
PAN files generated from 3rd party performance data are available for download at: silfabsolar.com/downloads.

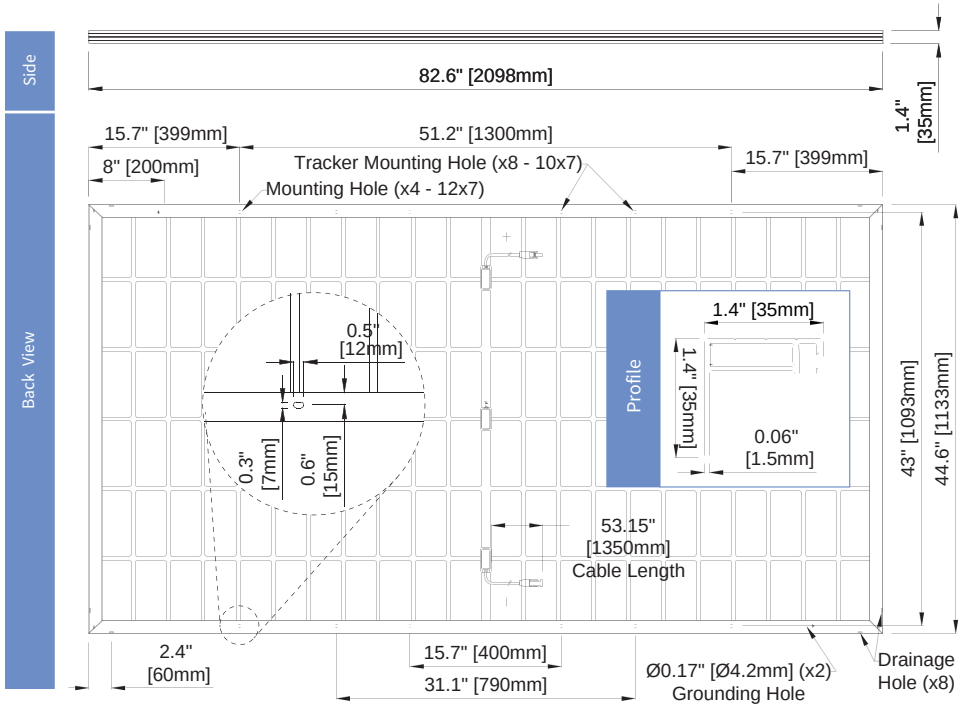

SILFAB SOLAR INC.

1770 Port Drive
Burlington WA 98233 USA
T +1 360.569.4733
info@silfabsolar.com
SILFABSOLAR.COM

7149 Logistics Lane
Fort Mill SC 29715 USA
T +1 839.400.4338

240 Courtneypark Drive East
Mississauga ON L5T 2S5 Canada
T +1 905.255.2501
F +1 905.696.0267

Silfab - SIL-540-XM-BIFACIAL 20241211

No reproduction of any kind is allowed without permission. Data and information is subject to modifications without noti Solar Inc., 2024. Silfab Solar® is a registered trademark o Solar Inc.

TAB D: PRELIMINARY SCHEDULE

Once program implementation is authorized by Council and funding is secured, the final elements of design and engineering can be completed. This includes land surveys, geotechnical studies, and preparation of design drawings and other documentation required to prepare submittal packages, obtain permits and procure equipment.

Prior to initiating construction, Climatec will provide submittals and engineered drawings (where applicable) for the City's technical review and written approval. Once submittals are approved, construction will be scheduled and coordinated with Staff and affected City departments to minimize disruptions for City operations.

A comprehensive construction schedule will be provided after completing submittal review and equipment procurement. A high-level preliminary schedule is included here for planning purposes:

SCOPE MEASURE	DURATION TO IMPLEMENT
Backup Power & Electrical Systems	6-18 months
HVAC & Building Automation Systems (BAS)	12-18 months
Lighting & Sports Field Lighting	6-12 months
Roofing	7-12 months
Solar & EV Charging	24-36 months w/ PTO
Water & Wastewater Treatment Plants	24-36 months

TAB E: PAYMENT BOND

PAYMENT BOND
Contractor's Labor & Material Bond
(100% Of Agreement Price)

(Note: Contractor must use this form, NOT a surety company form.)

KNOW ALL PERSONS BY THESE PRESENTS:

WHEREAS, the governing board ("Board") of the City of Escondido, (or "District") and _____ _____, ("Principal") have entered into a Agreement for the furnishing of all materials and labor, services and transportation, necessary, convenient, and proper to perform the following project:

_____ (Project Name) ("Project" or "Agreement") which Agreement dated _____, 20___, and all of the Agreement Documents attached to or forming a part of the Agreement, are hereby referred to and made a part hereof; and

WHEREAS, pursuant to law and the Agreement, the Principal is required, before entering upon the performance of the work, to file a good and sufficient bond with the body by which the Agreement is awarded in an amount equal to one hundred percent (100%) of the Agreement price, to secure the claims to which reference is made in sections 9000 through 9510 and 9550 through 9566 of the Civil Code, and division 2, part 7, of the Labor Code.

NOW, THEREFORE, the Principal and_____ _____ ("Surety") are held and firmly bound unto all laborers, material men, and other persons referred to in said statutes in the sum of _____ _____ Dollars ($_____), lawful money of the United States, being a sum not less than the total amount payable by the terms of Agreement, for the payment of which sum well and truly to be made, we bind ourselves, our heirs, executors, administrators, successors, or assigns, jointly and severally, by these presents.

The condition of this obligation is that if the Principal or any of his or its subcontractors, of the heirs, executors, administrators, successors, or assigns of any, all, or either of them shall fail to pay for any labor, materials, provisions, provender, or other supplies, used in, upon, for or about the performance of the work Contracted to be done, or for any work or labor thereon of any kind, or for amounts required to be deducted, withheld, and paid over to the Employment Development Department from the wages of employees of the Principal or any of his or its subcontractors of any tier under Section 13020 of the Unemployment Insurance Code with respect to such work or labor, that the Surety will pay the same in an amount not exceeding the amount herein above set forth, and also in case suit is brought upon this bond, will pay a reasonable attorney's fee to be awarded and fixed by the Court, and to be taxed as costs and to be included in the judgment therein rendered.

It is hereby expressly stipulated and agreed that this bond shall inure to the benefit of any and all persons, companies, and corporations entitled to file claims under section 9100 of the Civil Code, so as to give a right of action to them or their assigns in any suit brought upon this bond.

Should the condition of this bond be fully performed, then this obligation shall become null and void; otherwise, it shall be and remain in full force and affect.

And the Surety, for value received, hereby stipulates and agrees that no change, extension of time, alteration, or addition to the terms of Agreement or the specifications accompanying the same shall in any manner affect its obligations on this bond, and it does hereby waive notice of any such change, extension, alteration, or addition.

IN WITNESS WHEREOF, two (2) identical counterparts of this instrument, each of which shall for all purposes be deemed an original thereof, have been duly executed by the Principal and Surety above named, on the ____ _____ day of _____, 20___.

(Affix Corporate Seal)

_____
Principal

_____
By

_____
Surety

_____
By

_____
Name of California Agent of Surety

_____
Address of California Agent of Surety

_____
Telephone No. of California Agent of Surety

Contractor must attach a Notarial Acknowledgment for all Surety's signatures and a Power of Attorney and Certificate of Authority for Surety. The California Department of Insurance must authorize the Surety to be an admitted surety insurer.

END OF DOCUMENT

TAB F: PERFORMANCE BOND

PERFORMANCE BOND

(100% of Agreement Price)

(Note: Contractor must use this form, NOT a surety company form.)

KNOW ALL PERSONS BY THESE PRESENTS:

WHEREAS, the governing board ("Board") of the Calexico Union School District, ("District") and _____ _____ ("Principal") have entered into a Agreement for the furnishing of all materials and labor, services and transportation, necessary, convenient, and proper to perform the following project:

_____ (Project Name)

("Project" or "Agreement") which Agreement dated _____, 20___, and all of the Agreement Documents attached to or forming a part of the Agreement, are hereby referred to and made a part hereof; and

WHEREAS, said Principal is required under the terms of the Agreement to furnish a bond for the faithful performance of the Agreement.

NOW, THEREFORE, the Principal and _____ _____ ("Surety") are held and firmly bound unto the Board of the District in the penal sum of

_____

Dollars ($_____), lawful money of the United States, for the payment of which sum well and truly to be made we bind ourselves, our heirs, executors, administrators, successors, and assigns jointly and severally, firmly by these presents, to:

- Perform all the work required to complete the Project; and
- Pay to the District all damages the District incurs as a result of the Principal's failure to perform all the Work required to complete the Project.

The condition of the obligation is such that, if the above bounden Principal, his or its heirs, executors, administrators, successors, or assigns, shall in all things stand to and abide by, and well and truly keep and perform the covenants, conditions, and Agreements in the Agreement and any alteration thereof made as therein provided, on his or its part to be kept and performed at the time and in the intent and meaning, including all Contractual guarantees and warrantees of materials and workmanship, and shall indemnify and save harmless the District, its trustees, officers and agents, as therein stipulated, then this obligation shall become null and void, otherwise it shall be and remain in full force and virtue.

Surety expressly agrees that the District may reject any Contractor or subcontractor proposed by Surety to fulfill its obligations in the event of default by the Principal. Surety shall not utilize Principal in completing the Work nor shall Surety accept a Bid from Principal for completion of the Work if the District declares the Principal to be in default and notifies Surety of the District's objection to Principal's further participation in the completion of the Work.

As a condition precedent to the satisfactory completion of the Agreement, the above obligation shall hold good for a period equal to the warranty and/or guarantee period of the Agreement, during which time Surety's obligation shall continue if Contractor shall fail to make full, complete, and satisfactory repair and replacements and totally protect the District from loss or damage resulting from or caused by defective materials or faulty workmanship. The obligations of Surety hereunder shall continue so long as any obligation of Contractor remains. Nothing herein shall limit the District's rights or the Contractor or Surety's obligations under the Agreement, law or equity, including, but not limited to, California Code of Civil Procedure section 337.15.

The Surety, for value received, hereby stipulates and agrees that no change, extension of time, alteration, or addition to the terms of the Agreement or to the work to be performed thereunder or the specifications accompanying the same shall in any way affect its obligation on this bond, and it does hereby waive notice of any such change, extension of time, alteration, or addition to the terms of the Agreement or to the work or to the specifications.

IN WITNESS WHEREOF, two (2) identical counterparts of this instrument, each of which shall for all purposes be deemed an original thereof, have been duly executed by the Principal and Surety above named, on the ____ _____ day of _____, 20___.

(Affix Corporate Seal)

_____
Principal

_____
By

_____
Surety

_____
By

_____
Name of California Agent of Surety

_____
Address of California Agent of Surety

_____
Telephone No. of California Agent of Surety

Contractor must attach a Notarial Acknowledgment for all Surety's signatures and a Power of Attorney and Certificate of Authority for Surety. The California Department of Insurance must authorize the Surety to be an admitted surety insurer.

END OF DOCUMENT

TAB G: M&V AGREEMENT

In addition to terms and conditions for program implementation, Amendment 1 includes a separate Measurement & Verification (M&V) agreement. The purpose of the M&V agreement is to provide a savings guarantee and an annual report of verified savings performance.

CLIMATEC MEASUREMENT AND VERIFICATION AGREEMENT FOR CITY OF ESCONDIDO

SCOPE OF SERVICES

TERMS AND CONDITIONS

ATTACHMENTS

Attachment "A" – Guaranteed Savings Measurement & Verification

I. Savings Guarantee
II. Measurement & Verification Methods
III. Selected Measurement & Verification Options
IV. Specific Measurement & Verification Plan for Each ECM:
    1. Lighting System Upgrades
    2. HVAC System Installation
    3. HVAC Controls Upgrades
    4. Process System Upgrades
    5. High Efficiency Transformers Upgrades

Attachment "B" – Utility Baseline Summary

Attachment "C" – Standards of Operation (HVAC & Lighting)

I. Standards of Operation for HVAC
II. Standards of Operation for Lighting

CLIMATEC M&V AGREEMENT

This Measurement and Verification ("M&V") Agreement ("Agreement") entered into as of June 4, 2025 is made by and between:

City of Escondido ("Purchaser")
with its principal place of business at
201 N. Broadway,
Escondido, CA 92025

and

Climatec LLC
with its principal place of business at
2150 Towne Centre Place, Suite 200
Anaheim, CA 92806

This Agreement shall include the Attachment(s) listed below:

Attachment "A" – Guaranteed Savings Measurement & Verification

Attachment "B" – Utility Baseline Summary

Attachment "C" – Standards of Operation (HVAC & Lighting)

SCOPE OF SERVICES

Energy Savings Measurement & Verification Service:

Climatec LLC will provide M&V services of the energy savings associated with Purchaser's energy retrofit installation, as described in Attachment A – Scope of Work, located in the associated Installation Agreement. Energy savings M&V reports ("M&V Reports") will be provided to the Purchaser on an annual basis.

Term:

This Agreement shall commence upon the completion and acceptance of the Purchaser's energy retrofit installation project and receipt of final payment for the associated Installation Agreement ("Effective Date") and shall continue for a term of 30 years. The Purchaser may terminate this Agreement at any time with a sixty (60) day written notice. However, termination of this Agreement will void any savings guarantee under this Agreement and the Installation Agreement on or after the termination date.

Charges:

This Agreement shall be billed once per year due and payable within forty-five (45) days of the Purchaser's receipt of invoice, which shall be sent thirty (30) days following the Effective Date, and the anniversary of the Effective Date in the following years. The annual Agreement charge is $35,000 for the first three years and escalated at 5% annually for every subsequent year thereafter. This rate does not include taxes.

TERMS AND CONDITIONS

1. **General Provisions:**

1.1 Unless stated otherwise, the services provided under this Agreement shall be provided during Climatec LLC's normal business hours. Normal business hours are Monday through Friday, 8:00 A.M. to 5:00 P.M. inclusive, excluding holidays.

1.2 The Purchaser shall provide reasonable means of access to the equipment being measured or verified. Climatec LLC shall not be responsible for any removal, replacement, or refinishing of the building structure, if required to gain access to the equipment. Climatec LLC shall be permitted to start and stop all equipment necessary to perform the services herein described as arranged with the Purchaser's representative.

2. Charges:

2.1 For services not covered by this Agreement, but performed by Climatec LLC upon the Purchaser's authorization, the Purchaser agrees to pay Climatec LLC within forty-five (45) days of presentation of properly itemized invoice(s) at Climatec LLC's current rates.

2.2 If emergency service is requested by the Purchaser and inspection does not reveal any defect for which Climatec LLC is liable under this Agreement, the Purchaser will be charged at Climatec LLC's current emergency charge rates.

3. Limitations of Liability:

3.1 Climatec LLC shall not be liable for any loss, delay, injury, or damage that may be caused by circumstances beyond its control including, but not restricted to; acts of God, war, civil commotion, acts of government, fire, theft, corrosion, floods, lightning strikes, freezes, strikes, lockouts, differences with workmen, riots, explosions, quarantine restrictions, delays in transportation, shortage of vehicles, fuel, labor or materials, or malicious mischief. IN NO EVENT SHALL EITHER PARTY BE LIABLE FOR BUSINESS INTERRUPTION, LOSSES, OR CONSEQUENTIAL, INDIRECT, SPECIAL OR SPECULATIVE DAMAGES

3.2 Climatec LLC shall not be required to make safety tests, install new devices, or make modifications to any equipment to comply with recommendations or directives of insurance companies, governmental bodies, or for other reasons.

3.3 Climatec LLC shall not be required to make replacements or repairs necessitated by reason of negligence, abuse, misuse, or by reason of any other cause, unless such repairs are necessitated due to the actions or inaction of Climatec LLC, or its employees, representatives, agents, consultants, or subcontractors.

3.4 This Agreement pre-supposes that all equipment is in satisfactory working order. Climatec LLC will inspect the equipment within sixty (60) days after the Effective Date and will advise the Purchaser of any equipment found to be in need of repair. If the Purchaser does not authorize Climatec LLC to make the repairs or if the Purchaser does not have the work performed, the equipment will be eliminated from coverage and the Agreement savings will be adjusted. Maintenance of existing equipment and systems is the responsibility of the Purchaser. Failure to properly maintain equipment and systems can result in reduced energy efficiency and may necessitate a baseline energy adjustment and annual Agreement charge will be proportionately reduced. There may be some equipment which, for reasons beyond Climatec LLC's control, cannot be inspected before this Agreement takes effect. Climatec LLC will inspect such equipment on the first visit where the equipment is available.

3.5 The amount of any present or future sales, use, occupancy excise, or other tax (federal, state, or local) which Climatec LLC hereafter shall be obligated to pay, either on its own behalf or on the behalf of the Purchaser or otherwise, with respect to the services covered by this Agreement, shall be paid by the Purchaser.

3.6 If the equipment or software included under this Agreement is altered, modified, or changed by a party other than Climatec LLC, this Agreement shall be modified to incorporate such changes and the Agreement annual charge and/or savings shall be adjusted accordingly.

3.7 Following twelve (12) months of service or any time thereafter, if individual item(s) cannot, in Climatec LLC's opinion, be properly repaired on-site because of excessive wear or deterioration, Climatec LLC may withdraw the item(s) from coverage upon ninety (90) days prior written notice. Energy savings may be adjusted accordingly.

3.8 This Agreement shall be governed by, construed, and enforced in accordance with the laws of the State of California.

4. Miscellaneous Provisions:

4.1 Safety and Security:

The services provided hereunder may occur on active Purchaser sites. As such, Climatec LLC shall ensure that its services on and around the Purchaser site comply with all applicable laws, regulations and standards including but not limited to, the fingerprinting requirements of the Education Code and any other legal requirements which may be applicable to Climatec LLC's activities on or about the Purchaser sites. While the Purchaser shall reasonably assist Climatec LLC in determining the applicable requirements, it shall be Climatec LLC's sole responsibility for determining and complying with all applicable laws, regulations, and standards.

4.2 Dispute Resolution:

a. In the event of any dispute whatsoever between the parties, parties shall exhaust every reasonable effort to settle or dispose of the same, including a discussion of the matter between senior executives of each party.

b. Claims between Purchaser and Climatec LLC shall first be resolved using the procedures set forth at California Public Contract Code section 9204. "Claims" are defined, pursuant to California Public Contract Code section 9204, as a separate demand by Climatec LLC for one of the following: a time extension for relief from penalties for delay; payment of money or damages arising from work done; or payment of an amount disputed by Purchaser.

c. Upon receiving a Claim sent by registered or certified mail, Purchaser must review and provide a written response within forty-five (45) days that identifies the disputed and undisputed portions of the claim. The forty-five (45) day period to respond may be extended by mutual agreement between the parties. The Claim is deemed rejected in its entirety if Purchaser does not issue a response. Any payment due on an undisputed portion of the Claim must be processed within sixty (60) days after Purchaser's response. If a claimant disputes Purchaser's response or lack thereof, the claimant may demand to meet and confer for settlement of the issues in dispute. Any portion of a Claim that remains in dispute after a meet and confer conference will be subject to nonbinding mediation process, as described in California Public Contract Code section 9204. Undisputed and unpaid Claims accrue interest at seven percent (7%) per annum. A subcontractor or lower tier subcontractor may make a Claim to the Purchaser through Climatec LLC, as specified in California Public Contract Code section 9204. However, the procedures in this section shall not supersede the requirements of the Agreement with respect to Climatec LLC's notification to Purchaser of such Claim or extend the time for the giving of such notice as provided in the Agreement.

d. Any controversy or Claim arising out of or relative to the Agreement, or the breach thereof, not adjusted or disposed of by mutual agreement between the parties as described above, shall be first settled by mediation and then (in the absence of settlement after mediation), by arbitration under the American Arbitration Association Construction Industry Arbitration Rules then in effect, and judgment upon the award rendered by the arbitrator(s) may be entered in any court having jurisdiction thereof, and arbitration decision shall be final and binding on the parties and on all parties subject to the following. Said arbitration proceedings shall be filed in the regional office of the American Arbitration Association nearest to Purchaser. All arbitrators shall be bound by the terms of the Agreement. The expenses of any arbitration shall be borne equally by the parties to the arbitration, provided that each party shall pay for and bear the cost of its own experts, evidence, and counsel.

e. Pending a final resolution of a dispute, the parties shall each proceed diligently and faithfully with performance of their respective obligations under this Agreement.

4.3 Indemnification:

To the extent it may lawfully do so, the parties hereby indemnify, defend (with counsel of its choosing), and holds harmless the other party and its affiliates, directors, representatives, agents, officers, employees and volunteers from and against any and all liability or claim of liability, loss or expense, including defense costs and legal fees and claims for damages of whatsoever character, nature and kind, whether directly or indirectly arising from any third party actions from injury to or death of persons, and damage to or loss of property to the extent caused by or arising out of or connected with an act or omission of the indemnifying party, or an agent, invitee, guest, employee, or anyone in, on or about the Purchaser sites, including, but not limited to, liability, expense, and claims for: bodily injury, death, personal injury, or property damage caused by negligence, creation or maintenance of a dangerous condition of property, breach of express or implied warranty of product, defectiveness of product, or intentional infliction of harm, including any workers' compensation suits, liability, or expense, arising from or connected with services performed by, or on behalf of the, indemnifying party, by any person pursuant to this Agreement; nonpayment for labor, materials, appliances, teams, or power, performed on, or furnished or contributed to the Purchaser sites. Notwithstanding the above, neither party shall be required to defend, indemnify and hold harmless the other for its own negligent acts and omissions or willful misconduct. It is the intent of the parties that where negligence is determined to have been joint or contributory, principles of comparative negligence will be followed, and each party shall bear the proportionate cost of any loss damage, expense or liability attributable to that party's negligence.

5. **Occupational Safety and Health:** The parties hereto agree to notify each other immediately upon becoming aware of any alleged violation of, the Occupational Safety and Health Act (OSHA) relating in any way to the project or project site.
6. **Entire Agreement:** This Agreement, upon acceptance, shall constitute the entire agreement between the parties and supersedes any prior representations or understandings.
7. **Changes:** No change or modification of any of the terms and conditions stated herein shall be binding upon either party unless accepted by both parties in writing.
8. **Severability:** If one or more of the provisions of this Agreement are held to be unenforceable under laws, such provision(s) shall be excluded from these terms and conditions and the remaining terms and conditions shall be interpreted as if such provision were so excluded and shall be enforced in accordance to their terms and conditions.
9. **Counterparts:** This Agreement may be executed in multiple counterparts, each of which shall be deemed an original and all of which together shall constitute one and the same instrument. A signature on a copy of this Agreement received by either party by facsimile or portable document format (PDF) is binding upon the other party as an original. The parties shall treat a photocopy of such facsimile as a duplicate original.
10. **Assignment:** Climatec LLC retains the right to assign its rights and obligations of this Agreement only with advance written consent of Purchaser.
11. **Acknowledgment:** Both Climatec LLC and the Purchaser acknowledge having read this Agreement, and all Attachments hereto, and have executed this Agreement on the date written above.
12. **Approval:** Each party represents that the person that has executed this Agreement on its' behalf is authorized to do so.

City of Escondido	**Climatec LLC**
_____	_____
Signature	Signature
_____	_____
Print Name	Print Name
_____	_____
Title	Title
_____	_____
Date	Date

Attachment "A"
Guaranteed Savings Measurement & Verification

Guaranteed Savings Measurement & Verification

This document contains the energy savings measurement and verification plan ("M&V Plan") for the energy conservation measures ("ECMs") contained in the Installation Agreement. The following table summarizes the ECMs proposed.

TABLE 1.0

Site	Lighting System Upgrades	HVAC System Installation	HVAC Control Upgrades	High Efficiency Transformers	Solar PV System Installation	Process System Upgrades
Boys and Girls Club/James Stone Pool					X	
City Hall	X	X	X	X	X	
CCAE & Central Plant	X	X	X	X	X	
Daley Ranch Maintenance Facility & Historic House	X		X			
Done E. Anderson Building		X	X			
East Valley Community Center (EVCC)/Heritage Academy	X	X	X			
Fire Station No. 1	X	X				
Fire Station No. 2	X	X				
Fire Station No. 3	X	X				
Fire Station No. 4	X					
Fire Station No. 5	X	X				
Fire Station No. 6	X	X				
Fire Station No. 7	X	X				
Lake Wohlford Boat House	X					
Library	X			X	X	
Mathes Center	X	X	X			
Oak Hill Activity Center	X	X	X			
Park Avenue Community Center (PACC)/Veterans Center	X			X	X	
Police and Fire Headquarters (PAFH)	X			X		
Public Works Yard		X	X			
Ranger Station - Dixon Lake	X		X			
Ranger Station - Lake Wohlford		X	X			
Real Estate Property		X	X			
Recycling Offices	X	X	X	X		
Grape Day Park	X					
Grape Day Park Historical Sites		X	X			
Jesmond Dene Park	X					
Kit Carson Park	X	X	X			
Mayflower Dog Park	X					
Mountain View Park	X					
Rod McLeod Park	X					
Ryan Park	X			X		
Washington Park	X		X		X	
Dixon Lake Cottage Rental		X	X			
Reidy Creek Golf Course				X		
Vineyard Golf Course		X	X			
Hale Avenue Resource & Recovery Facility (HARRF)	X	X		X		X
Water Treatment Plant (WTP)	X	X	X	X		X

A specific M&V Plan is submitted for each energy conservation measure ("ECM") to provide a comprehensive overall plan for Purchaser. Each measure's M&V Plan provides:

- A description of how the savings shall be verified for each ECM.
- Selection of specific protocol for verification of savings of each ECM.
- Requirements for measurement or other means to establish the ECM savings.

Climatec LLC is responsible for the pre-retrofit measurement, energy savings calculations, equipment installation, and required post-retrofit verification as outlined herein. Purchaser agrees to operate and maintain all equipment installed. **Proper operation and maintenance of equipment and systems is critical to long-term achievement of energy savings.**

SAVINGS GUARANTEE

Climatec LLC warrants that Purchaser shall realize total utility savings and total operational savings ("Guaranteed Project Savings") in excess of the total project cost, during the course of the useful life of the equipment (estimated to be 30 years). The "Guarantee Period" begins on the Effective Date and continues for a term not to exceed 30 years. Climatec LLC agrees to complete the M&V Report on an annual basis and deliver to the Purchaser within sixty (60) days of the anniversary date of the Effective Date and annually thereafter. Project savings that are verified during the course of construction will be applied to the first year guaranteed project savings.

If the annual M&V Report demonstrates that the project will achieve one hundred percent (100%) or more of the project savings needed for the year, then Climatec LLC shall have satisfied its energy performance guarantee obligation and the Purchaser shall accept the annual M&V Report.

In the event that an annual M&V Report savings value (including any excess, unapplied savings from previous years) does not meet the Guaranteed Project Savings required to date in accordance with the M&V Plan, then Climatec LLC shall repair, replace, or substitute the ECM that is not performing at the required level, as identified in the M&V Report, and at Climatec LLC's expense. Following corrective action, Climatec LLC shall re-perform the relevant M&V work for the affected ECM(s) and amend or supplement the M&V Report. If the sum of the ECMs indicates that the Guaranteed Project Savings are met or exceeded, then no further remedy shall be required.

If, after the opportunity to make corrections, the M&V Report, as amended, indicates that verified savings are less than the Guaranteed Project Savings required at that point of the guarantee, then Climatec LLC shall pay the Purchaser the shortfall amount. However, under no circumstances will the amount(s) paid for the total of the energy savings shortfalls exceed the Installation Agreement's contract amount.

The Purchaser agrees that project savings, which exceed the guaranteed amount required in any one (1) year, may be applied to future year's savings to offset an energy savings shortfall. The savings guarantee will remain in effect for the term of this Agreement.

The Utility Baseline Summary, as shown in Attachment B, may be modified over the course of the Guarantee Period to adjust for changes in utility rates, number of days in utility billing cycle, square footage, energy using equipment, building occupancy and weather. This Guaranteed Project Savings is subject to the Purchaser's adherence to the Standards of Operation for Lighting and HVAC systems, as documented in Attachment C of this Agreement.

MEASUREMENT AND VERIFICATION METHODS

M&V of energy savings is a methodology based on standard industry protocol intended to provide reasonable assurance that energy savings calculated are realized over the term of the Agreement.

The development of the M&V Plan is based on the IPMVP-2022 (International Performance Measurement and Verification Protocol) and the application of sound engineering and business guidelines to the overall need for verification of energy savings for each ECM. This plan contains methodology that shall cost effectively provide assurance of equipment savings through short term or spot measurements, engineering calculations and/or direct utility billing comparisons. The necessary components to a well-established M&V Plan are:

- Specific identification of each ECM and proposed M & V reporting requirements for overall savings.
- Participation of all parties and any necessary coordination with independent review.

Methods of M&V vary in accordance with the type of project, level of assurance of savings, cost, and availability of data, financing constraints, and energy costs. The methods selected must be cost effective given the financial savings to the Purchaser. The methods used for the ECMs detailed herein were selected to minimize M&V cost while still providing a reasonable assurance of the savings calculations.

The IPMVP-2022 guideline provides the following options related to methodology for M&V:

Option A – Partially Measured Retrofit Isolation. Option A uses a combination of stipulated and/or measured factors to calculate baseline usage and savings associated with the ECM. Spot or short-term measurement would be used for the measured values. Stipulated values are supported by Purchaser input, historical data, or manufacturer data.

- Baseline and savings calculations are provided through engineering calculations, component or system models.
- Depending on number of points measured, Option A provides the least cost alternative to M&V.

Option B – Retrofit Isolation. Option B provides for measurement to provide data for assessing values or variables. Spot or short-term measurement, taken at the component and/or system level are taken when variations in factors can be accounted for or eliminated. Continuous measurement at the component and/or system level can also be used to account for the variations in factors over time.

- Baseline and savings calculations are provided through engineering calculations, component or system models. Cost is variable depending on the points measured, and the term of the measurement process used. Option B provides a better scenario for ECMs where a small number of factors can be accurately measured with a measurement plan.

Option C – Whole Building. Option C involves the use of utility meters or whole building sub-metering to assess the energy performance of the entire building. After an ECM is implemented the billing data is assessed in accordance with an approved plan to determine actual ECM savings.

- Baseline is established through utility data and engineering/regression analysis.
- Engineering calculations or modeling initially provides estimated ECM savings.
- Actual ECM savings are based on the utility or metered data. Savings must be adjusted for changes in building operation and variables assumed in the engineering calculations or modeling (such as weather, occupancy, etc.).
- Cost of this approach is variable based on the availability of utility data, sub-metered data, and overall savings guarantee. If the metered data is used for a savings guarantee, all variables related to building performance must be measured and adjusted, usually on an annual basis. Option C usually requires a substantial amount of time and effort to establish the baseline, provide adjustments and track the savings.

Option D – Calibrated computer simulation. Option D uses computer-modeling techniques to provide an engineering model of component and/or system performance. The inputs to the computer simulation may be made by engineering estimates, short or long term measurements, and utility or other metered data. Once the model is properly calibrated it is used for the establishment of the baseline and savings by changing appropriate inputs.

- Baseline is established through a calibration process for the computer modeling. Appropriate measurements and inputs are reflected against regression analysis for the metered data.
- Once the model is calibrated and the baseline established inputs are varied for the proposed ECM to establish savings.
- Actual ECM savings are stipulated based on the computer model. There may be follow up calibration of the model with the ECM in place to affirm the overall building simulation model.
- Cost of this method varies based on the complexity and accuracy of model desired, availability of data and overall measurement required.

SELECTED MEASUREMENT AND VERIFICATION OPTIONS

For the ECMs covered under this M&V Plan, the table of selected M&V options (Table 1.1) summarizes the proposed **IPMVP options selected**:

TABLE 1.1

Site	Lighting System Upgrades	HVAC System Installation	HVAC Control Upgrades	High Efficiency Transformers	Solar PV System Installation	Process System Upgrades
Boys and Girls Club/James Stone Pool					C	
City Hall	C	C	C	C	C	
CCAE & Central Plant	C	C	C	C	C	
Daley Ranch Maintenance Facility & Historic House	A		A			
Done E. Anderson Building		A	A			
East Valley Community Center (EVCC)/Heritage Academy	A	A	A			
Fire Station No. 1	A	A				
Fire Station No. 2	A	A				
Fire Station No. 3	A	A				
Fire Station No. 4	A					
Fire Station No. 5	A	A				
Fire Station No. 6	A	A				
Fire Station No. 7	A	A				
Lake Wohlford Boat House	A					
Library	A			A	C	
Mathes Center	A	A	A			
Oak Hill Activity Center	A	A	A			
Park Avenue Community Center (PACC)/Veterans Center	A			A	C	
Police and Fire Headquarters (PAFH)	A			A		
Public Works Yard		A	A			
Ranger Station - Dixon Lake	A		A			
Ranger Station - Lake Wohlford		A	A			
Real Estate Property		A	A			
Recycling Offices	A	A	A	A		
Grape Day Park	A					
Grape Day Park Historical Sites		A	A			
Jesmond Dene Park	A					
Kit Carson Park	A	A	A			
Mayflower Dog Park	A					
Mountain View Park	A					
Rod McLeod Park	A					
Ryan Park	A			A		
Washington Park	A		A		C	
Dixon Lake Cottage Rental		A	A			
Reidy Creek Golf Course				A		
Vineyard Golf Course		A	A			
Hale Avenue Resource & Recovery Facility (HARRF)	A	A		A		A
Water Treatment Plant (WTP)	A	A	A	A		A

The particular option selected for each ECM was based on a number of related issues including: ECM cost, ECM savings, cost of M&V and the ability to accurately determine whole building operations.

The baseline and the post-installation energy use depend on various system and external factors, such as energy demand, operating hours, weather conditions, motor loading, energy rates, and occupancy. Development of the baseline, post ECM consumption, cost avoidances and simple payback for each ECM covered by this M&V Plan includes:

- Stipulated Values – These values are important in the overall calculations for energy consumption, financial calculations, and operating conditions. Climatec LLC and Purchaser have agreed to these values for purposes of establishing savings.
- Developed/Measured Values – These are the values determined by spot or short-term measurement. Values are determined based on a sound engineering approach to variable determination. Both values used for baseline consumption and values to be measured/determined as parts of the post ECM implementation are detailed.
- Assumptions – Some values that are assumed in order to calculate energy use are necessary in certain circumstances.
- Calculations – The necessary calculations for baseline energy and demand usage, the calculation of the energy and demand components with implementation of the ECM, the calculation of costs, and annual savings are the primary tool for assessing the estimated and actual savings of any ECM.
- Instrumentation – The type and specifications, if applicable, for any instrumentation used for developed/measured values is provided to ensure appropriate meters and measurement equipment is used for specified applications.
- Pre-Retrofit Measurements – Each ECM may have a section detailing the measurements required prior to the retrofit. These measurements are used to establish the baseline or adjustments required to establish an accurate baseline.
- Post-Retrofit Measurements – Each ECM may have a section that details the measurements required if any after the retrofit is completed. This section is utilized to detail the type of measurements required for verification of the energy savings calculations.
- Adjustments – Each ECM may have a section for adjustments. This section includes possible adjustments to the actual Energy Audit Report and energy information, appropriate adjustments to the M&V Plan, and adjustments to any savings guarantee. This section is utilized to anticipate changes necessary due to field conditions and provide an appropriate response in the verification of actual energy and cost avoidances.
- Commissioning – Each ECM may have a section regarding the commissioning process. This provides the detail for how the savings will be verified upon project completion, and the type of inspection that will be completed, and the billing method for verified savings. This section is utilized to provide a standard approach for each ECM upon project completion.

Climatec LLC will follow the agreed-upon M&V protocols for the measurement period and will prepare post-installation reports with supporting documentation for the Purchaser. The cost of M&V is included in the project cash flow requirements.

SPECIFIC MEASUREMENT AND VERIFICATION PLAN
"OPTION A"
FOR LIGHTING SYSTEM UPGRADES

Introduction

This M&V Plan is specific to all lighting retrofits and occupancy sensor installations. The sites receiving these upgrades are listed in the table of recommended measures located at the beginning of this Attachment.

M&V Protocol

For this ECM, IPMVP Protocol – Option A shall be utilized. This option provides for the measurement of at least one variable pre- and post-retrofit with other variables allowed for stipulation. For this retrofit, a representative sample of each of the fixture types will be measured. The same sample will be used for both pre- and post-retrofit calculations. Wattage shall be measured with an appropriate instrument that is properly calibrated.

Light Levels

A representative sample of the light levels shall be measured. Where rooms have similar or identical lighting design, it is not required that each room be measured. Light levels shall be measured by an appropriate instrument that is properly calibrated. Light level measurements apply to both pre- and post-retrofit areas and shall be recorded at the work surface. Where rooms do not have a specific work surface (such as gymnasiums) light levels shall be measured at the floor.

Documentation

All areas measured shall be documented. The data shall indicate areas that do not meet IESNA standard light level requirements. All instrumentation used shall be clearly documented.

Stipulated Values

Operating hours are stipulated for purposes of M&V. Please see Attachment C, Lighting Standards of Operation for a complete list of lighting hours of operation. Stipulated values are agreed to by the Purchaser.

Savings Calculations

The calculations for the baseline energy consumption and post-retrofit savings provide the basis for the overall financial viability of this ECM.

kWh and/or kW Savings

The electrical consumption reduction of a particular lighting ECM is determined by comparing the pre- and post-conditions applied to the hours agreed upon in the Standards of Operation.

{[(Existing watts/fixture) x (existing quantity) x (existing hours of operation)] –

[(proposed watts/fixture) x (proposed quantity) x (proposed hours of operation)} / 1000 = kWh savings

Dollar Savings

After calculating the kWh saved, the specific facility's average cost per kilowatt-hour shall be used to determine dollar savings.

(kWh saved) x (average kWh rate) = $ kWh saved

($ kWh saved) = the total dollars saved

Operational Savings

The Purchaser will realize maintenance and operational savings resulting from the new lighting system installations, extended warranties, and/or service agreements provided by Climatec LLC. The operational savings are stipulated and met upon the completed installation of the Installation Agreement.

Adjustments

For this ECM the following adjustments are allowed for purposes of M&V:

- Light level requirements may be modified as detailed in this plan.
- Changes in actual construction including number and/or type of fixtures. All changes shall be clearly documented and provided to the Purchaser's representative.
- Utility rates, billing days or degree-days.

Commissioning

Commissioning shall consist of inspections and a final savings verification report. Inspections shall consist of:

- During the construction phase of the project, Climatec LLC shall keep a detailed record of the quantity and types of fixtures retrofitted and fixtures installed in each building. A post construction inspection is required by the responsible M&V party.
- After lighting modifications have been made, the installations shall be inspected to verify the retrofit counts by fixture code.
- Post-retrofit lighting levels shall be measured to verify compliance with the contract standards.

SPECIFIC MEASUREMENT AND VERIFICATION PLAN
"OPTION A"
FOR HVAC SYSTEMS INSTALLATION

Introduction

This M&V Plan is specific to the installation of new high efficiency HVAC units at the sites listed in the Table of Recommended Measures located at the beginning of this Attachment.

M&V Protocol

For this ECM, IPMVP Protocol – Option A shall be utilized. This option shall provide for the measurement of at least one variable pre- and post-retrofit with other variables allowed for stipulation. For this retrofit, field data shall be collected which includes, unit counts, unit tonnage, nameplate horsepower and efficiency rating for each existing HVAC system.

Stipulated Values

Hours of operation, heating/cooling loads and runtime hours of the existing HVAC systems are stipulated for purposes of M & V. Please refer to Attachment C, HVAC Standards of Operation in this Agreement for specific operating hours and runtime hours for each HVAC unit or area. Stipulated values are agreed to by Purchaser.

Calculations

The calculations for the baseline energy consumption and post-retrofit savings provide the basis for the overall financial viability of these ECMs. The following equations summarize the calculation of savings:

Electric (kWh) Savings

The electrical usage reduction of this ECM is determined by the following equation:

((Size of Existing HVAC Unit) x (Unit Efficiency) x (Stipulated Load Factor) - (Size of New Cooling Unit) x (Unit Efficiency) x (Stipulated Load Factor)) x (Annual Operating Hours) = kWh Savings

Dollar Savings

After calculating the kWh saved, the specific facility's average cost per kilowatt-hour shall be used to determine dollar savings.

(kWh saved) x (average kWh rate) = $ kWh saved

($ kWh saved) = Total dollars saved

Operational Savings

The Purchaser will realize maintenance and operational savings resulting from the new system installations, extended warranties, and/or service agreements provided by Climatec LLC. The operational savings are stipulated and met upon the completed installation of the Installation Agreement.

Pre-Retrofit Measurements

None required for this ECM.

Post-Retrofit Measurements

None required for this ECM.

Adjustments

None required for this ECM.

Commissioning

Commissioning shall consist of inspections, and a final commissioning report. The inspections and report shall consist of:

- Commissioning of the newly installed HVAC equipment shall include verification that each new unit is operating, as specified, in all modes (heat/cool).

SPECIFIC MEASUREMENT AND VERIFICATION PLAN
"OPTION A"
FOR HVAC CONTROLS UPGRADE

Introduction

This M&V Plan is specific to the Energy Management System ("EMS") upgrades at the sites listed in the Table of Recommended Measures located at the beginning of this Attachment.

M&V Protocol

For this ECM, IPMVP Protocol – Option A shall be utilized. This option shall provide for the measurement of at least one variable pre- and post-retrofit with other variables allowed for stipulation. The cooling and heating setpoints during occupied and unoccupied modes of the HVAC equipment will be verified and documented. For this retrofit, field data shall be collected which includes, unit counts, unit tonnage, nameplate horsepower, efficiency rating, operating schedules, cooling and heating temperature setpoints for each HVAC system.

Stipulated Values

Hours of operation and heating/cooling load factors are stipulated for purposes of M&V. Please refer to the Attachment C, HVAC Standards of Operations for specific existing and proposed operating hours for each HVAC unit or area. Stipulated values are agreed to by Purchaser.

Calculations

The calculations for the baseline energy consumption and post-retrofit savings provide the basis for the overall financial viability of these ECMs. Post-retrofit operating schedules and trend reports will be used to verify the inputs such as operating hours, cooling/heating temperature setpoints that are used in the calculations to validate the savings. The following equations summarize the calculation of savings:

Electric (kWh) Savings

The electrical usage reduction of this ECM is determined by applying the stipulated runtime reduction to the calculated energy usage of the HVAC unit.

(Size of HVAC unit) x (Unit efficiency) x (Stipulated load factor) x (Existing annual operating hours – Proposed annual operating hours) = kWh savings

Natural Gas (Therms) Savings

The natural gas usage reduction of this ECM is determined by applying the stipulated runtime reduction to the calculated energy usage of the HVAC unit.

(Size of Heating unit) x (Unit efficiency) x (Stipulated load factor) x (Existing annual operating hours – Proposed annual operating hours) = Therm savings

Dollar Savings

After calculating the kWh saved and the Therms saved, the specific facility's average cost per kilowatt-hour and the average cost per Therm of natural gas shall be used to determine dollar savings.

(kWh saved) x (average kWh rate) = $ kWh saved

(Therms saved) x (average Therm rate) = $ Therms saved

($ kWh saved) + ($ Therms saved) = Total dollars saved

Operational Savings

The Purchaser will realize maintenance and operational savings resulting from the new system installations, extended warranties, and/or service agreements provided by Climatec LLC. The operational savings are stipulated and met upon the completed installation of the Installation Agreement.

Pre-Retrofit Measurements

Existing operating hours and cooling/heating temperature setpoints for each HVAC unit or area will be obtained from current thermostats/BAS.

Post-Retrofit Measurements

Post-retrofit operating schedules, cooling and heating temperature setpoints in both occupied and unoccupied modes for the HVAC equipment will be obtained using the new controls system.

Adjustments

For this ECM the following adjustments are allowed for purposes of M&V:

- Addition or subtraction to the conditioned square footage of facilities
- Utility rates, billing days or degree-days
- Equipment changes
- Increase or decrease in facility usage as associated with daily occupancy times and special events

Commissioning

Commissioning shall consist of inspections, and a final commissioning report. The inspections and report shall consist of:

- Commissioning of the newly installed EMS shall include verification that the operating schedules, cooling and heating temperature set points and the control sequences for the HVAC equipment have been programmed as specified.

SPECIFIC MEASUREMENT AND VERIFICATION PLAN

"OPTION A"
FOR PROCESS SYSTEM UPGRADES

Introduction

This Measurement and Verification Plan (M&V) is specific to the pump motors replacement, aeration mixers and installation of variable frequency drives on motors. The sites receiving these upgrades are listed in the table of recommended measures located at the beginning of this Attachment.

M&V Protocol

For this ECM, IPMVP Protocol – Option A shall be utilized. Measurements will include the key performance parameters that define the energy use of the ECM. Estimated factors are supported by historical or manufacturer's data. Savings are determined by means of engineering calculations of baseline and reporting period energy use based on measured and estimated values.

Stipulated Values

Hours of Operation and motor load factors of the existing systems are stipulated for purposes of M & V.

Calculations

The calculations for baseline energy consumption and post-retrofit savings provide the basis for the overall financial viability of these ECMs. The following equations summarize the calculation of savings:

Electric (kWh) Savings

Electrical demand and consumption savings are determined according to the equation given below for each fan/pump.

$$Annual\ Billed\ Demand\ Saved\ (kW) = (Existing\ Max\ Power\ (kW) - Proposed\ \ Max\ Power\ (kW)) * 12$$

$$Annual\ Savings\ (kWh) = (Baseline\ kW - Porposed\ kW)x\ Annual\ Operating\ Hours$$

Dollar Savings

After calculating the electrical energy and demand saved as a result of the ECM, the applicable utility tariff in the current year of analysis for each specific facility shall be used to determine dollar savings according to the equation given below.

$$Cost\ Savings\ (\$) = [Demand\ Saved(kW) * Demand\ Rate(\$/kW)] + [Consumption\ Saved\ (kWh) * Consumption\ Rate\ (\$/kWh)]$$

Pre-Retrofit Measurements

- Nameplate motor data such as:
  - Motor horsepower
  - Fan/pump motor RPM
  - Motor enclosure type
  - Motor efficiency

- VFD rated efficiency. This information is obtained from manufacturer's specifications.
  - System Operations
    - Determinants of motor speed. Possible determinants are the facility operation schedule or the plant production level.
    - Facility operation schedule. Obtained from facility operator.
    - Facility production level. This information is obtained from the facility operator.

Post Retrofit Measurements

- True RMS power. This plan prefers a trend log of true poly-phase RMS power for the circuit powering the process pump/mixer motor, and 15-minute intervals are desired for the trend data. In general terms, a measurement period should be long enough to observe significant variation of dependent operating variables to reduce uncertainty in the annualized estimate.
- Alternative power measurement. In lieu of true power trending, it is acceptable to use trending of current combined with one-time true power measurement of the circuit powering the VFD at three levels of percent speed, including one at 100% speed.
- VFD speed measurement. Coincident with the power trending, the VFD percent speed or hertz should also be trended.
- Maximum power point. This is the power, in kilowatts, at 100% speed for the VFD.

SPECIFIC MEASUREMENT AND VERIFICATION PLAN

"OPTION A"
FOR HIGH EFFICIENCY TRANSFORMER UPGRADES

Introduction
This Measurement and Verification Plan (M&V) is specific to all high efficiency transformer upgrades. The sites receiving these upgrades are listed in the table of recommended measures located at the beginning of this Attachment.

M&V Protocol
For this ECM, IPMVP Protocol Option A- Retrofit Isolation shall be utilized. This option is based on a combination of measured and estimated factors when variations in factors. Measurements are short-term, periodic, or continuous, and are taken at the component or system level for both the baseline and the retrofit equipment. Estimated factors are supported by historical or manufacturer's data. Savings are determined by means of engineering calculations of baseline and reporting period energy use based on measured and estimated values. Hours of operation are stipulated for the purposes of M&V.

The following electrical system data will be measured and logged over a 15 minute period when the transformers are operating under typical conditions for the facility. Field measurements will be taken for both the old and new transformers under similar electrical load conditions with appropriately calibrated instruments.

- Transformer Losses
- Transformer Loading (kW)
- Power Quality Data
- Other measured parameters include voltages, currents, power factor, etc.

Calculations
The calculations for the baseline electrical demand and consumption and post retrofit savings provide the basis for the overall financial viability of this ECM.

Electric (kWh) Savings
The electrical consumption reduction of a transformer replacement is determined by comparing the measurements specified above at pre and post conditions within the typical loading range. Electrical demand and consumption savings are determined according to the equation given below for each transformer.

kWh Savings = [Existing Transformer Losses (kW) – Replacement Transformer Losses (kW)] x Operating hours

Dollar Savings
After calculating the kWh saved, the specific facility's average cost per kilowatt hour shall be used to determine dollar savings.

(kWh saved) x (average kWh rate) = $ kWh saved
($ kWh saved) = Total dollars saved

Adjustments
For this ECM the following adjustments are allowed for purposes of Measurement and Verification:

- Changes in utility rates and tariffs
- Changes in the transformer usage or load profile as a result of facility alterations
- Modifications or removal of transformers after the guarantee period has started
- Variations in actual construction including number and/or type of transformers installed

Commissioning

Commissioning shall consist of on-site inspections, a field measurement report, and a final savings verification report. The savings validation and commissioning procedure is outlined below:

- Prior to replacement, implement the test plan on the existing transformers as a record of the pre-retrofit conditions and electrical measurements (losses and loading).
- For each new transformer that replaces a transformer measured as part of the baseline, measure each new unit after installation per its test plan following the same protocol as used before.
- Additional energy measurements will not be done on a scheduled basis but may be completed if substantial changes in the transformer load or performance are identified.
- Compare the before and after measurements and compile the results into a post-installation M&V report detailing the electrical savings achieved as a result of this ECM.

SPECIFIC MEASUREMENT AND VERIFICATION PLAN

"OPTION C"
FOR WHOLE FACILITY UPGRADE WITH MULTIPLE ECMs

Introduction
This Measurement and Verification Plan (M&V) is designed to assess the impact of multiple energy conservation measures and solar PV systems installed at the same facility. The sites which qualify for this M&V Plan are listed in the table of recommended measures located at the beginning of this Attachment.

M&V Protocol
For sites with multiple interactive ECMs, IPMVP Protocol – Option C shall be utilized. This option involves use of utility meters, whole-facility meters, or sub-meters to assess the energy performance of a total facility. Facility characteristics and energy consumption information must be collected for the entirety of the baseline and reporting periods. This Option determines the collective savings of all ECMs applied to the part of the facility monitored by the energy meter.

Independent Variables
Regularly changing parameters affecting a facility's energy use are called independent variables. Common independent variables are weather, occupancy, and utility tariffs. All independent variables for the facility will be measured and recorded at the same time as the energy data. For example, weather data will be recorded daily so they can be totaled to correspond with the exact monthly energy-metering period, which may be different from the calendar month.

Static Factors
Parameters that may affect a facility's energy consumption which are not likely to change during the reporting period are known as static factors. Common static factors for a whole facility retrofit may include the facility square footage, building envelope characteristics, and internal plug-loads. In order to accurately analyze the effects of the building retrofit, any changes of the static factors between the baseline and reporting periods must be documented and accounted for. It is the customer's responsibility to document and report any and all changes of static factors to Climatec LLC as they occur. On an annual basis, Climatec LLC will conduct a facility review to determine if any major changes to any static factors have occurred which were not previously reported by the customer.

Savings Calculations
The calculations for the baseline energy consumption and post retrofit savings are completed in accordance with the industry guidelines set forth in IPMVP (2022) & ASHRAE (2022).

kWh and/or kW Savings

The electrical consumption reduction of the facility shall be reported as "Avoided Energy Use" in which the savings are stated under the conditions of the Reporting Period. Avoided energy use quantifies savings in the reporting period relative to what energy use would have been without the ECM(s).

$$Avoided\ Energy\ Use\ (or\ Savings) = (Baseline\ Energy\ \pm \\ Routine\ Adjustments\ to\ reporting\ period\ conditions\ \pm \\ Non\ Routine\ Adjustments\ to\ reporting\ period\ conditions) - Reporting\ Period\ Energy$$

Dollar Savings

Cost savings are determined by applying the appropriate price schedule in the following equation:

$$Cost\ Savings = C_b - C_r$$
$$Where:$$
$$C_b: Cost\ of\ the\ baseline\ energy\ plus\ any\ adjustments$$
$$C_r: Cost\ of\ the\ reporting\ period\ energy\ plus\ any\ adjustments$$

Costs will be determined by applying the applicable rates that were effective during the reporting period in computing both C_b and C_r. Since energy savings are being reported as avoided energy, the price schedule of the

reporting period will be used to compute the "avoided cost" on a meter by meter basis. The price schedule will be obtained from the energy supplier and will include all elements that are affected by metered amounts, such as consumption charges, demand charges, transformer credits, power factor, demand ratchets, and fuel price adjustments. In the event of a significant decrease in energy prices, the price schedule used for savings reporting will be that which prevailed at the time of commitment to the investment.

Adjustments

All adjustments will be computed from identifiable physical facts about the energy governing characteristics of equipment within the measurement boundary. Two types of adjustments are possible:

Routine Adjustments-

Routine adjustments are used to account for changes in any energy-governing factors, expected to change routinely during the reporting period, such as weather. This is completed by developing a valid mathematical model of each meter's energy-use pattern. Although model specifics may vary from meter to meter, typically the baseline model includes factors derived from regression analysis, which correlates energy to one or more independent variables such as occupancy, degree days, and metering period length. Current values of independent variables over the reporting period are then inputted into the baseline model to predict what the baseline energy consumption would have been had not ECMs been installed.

Non-Routine Adjustments

Non-Routine adjustments are used for static energy-governing factors, which are not expected to change, such as: the facility size, the design and operation of installed equipment, or the type of occupancy. All changes to static factors must be documented and reported, as they occur in order to properly quantify the impacts they have on a facilities energy-use pattern. Due to the unpredictable nature and infrequence of static factor changes, customized adjustments will be based on industry standards and sound engineering principals as they pertain to the specific system in question.

Attachment "B"
Utility Baseline Summary

City of Escondido Utility Baseline Summary			1/1/2023	through	12/31/2023			
Site Name	Address	Square Footage	Dollars Electric	kWh	$ / kWh	Dollars Gas	Therms	$ / Therms
Boys & Girls Club / Jim Stone Pool	115 Woodward Ave, Escondido, CA 92025	37,677	$49,030	136,426	$0.36	$41,763	22,991	$1.82
City Hall	201 N. Broadway, Escondido, CA 92025	103,122	$352,864	952,406	$0.37	$8,360	3,712	$2.25
CCAE & Central Plant	201 N. Broadway, Escondido, CA 92025	191,414	$876,489	2,305,576	$0.38	$219,512	137,195	$1.60
Community Child Development Center	613 E Lincoln Ave, Escondido, CA 92026	7,110	$0	0		$0	0	
Daley Ranch Maintenance Facility	3024 La Honda Drive, Escondido, CA 92027	2,699	$7,472	15,759	$0.47	$0	0	
Don E. Anderson Building	120 Woodward Ave., Escondido, CA 92025	2,897	$3,542	8,684	$0.41	$0	0	
East Valley Community Center ("EVCC") / Heritage Academy	2245 E. Valley Parkway, Escondido, CA 92027	49,771	$36,822	43,198	$0.85	$10,915	4,994	$2.19
Fire Station No. 1	31O Quince St., Escondido, CA 92025	28,340	$109,297	227,097	$0.48	$9,248	4,067	$2.27
Fire Station No. 2	421 N. Midway Drive, Escondido, CA 92027	11,000	$29,629	77,130	$0.38	$7,855	3,331	$2.36
Fire Station No. 3	1808 N. Nutmeg St., Escondido, CA 92026	8,950	$37,734	103,535	$0.36	$4,736	2,339	$2.02
Fire Station No. 4	3301 Bear Valley Parkway, Escondido, CA 92025	5,400	$23,069	64,056	$0.36	$1,333	695	$1.92
Fire Station No. 5	2319 Felicita Road, Escondido, CA 92029	7,000	$26,836	69,210	$0.39	$5,152	2,278	$2.26
Fire Station No. 6	1735 Del Dies Road, Escondido, CA 92029	7,360	$31,009	84,163	$0.37	$3,234	1,579	$2.05
Fire Station No. 7	1220 N. Ash St., Escondido, CA 92027	8,950	$39,796	107,626	$0.37	$8,526	3,790	$2.25
Hale Avenue Resource & Recovery Facility ("HARRF")	1521 S. Hale Ave., Escondido, CA 92029	48,480	$1,763,072	4,659,051	$0.378	$353,447	242,219	$1.46
Hubbard Hill	1225 Hubbard Ave., Escondido, CA 92026		$16,446	44,875	$0.37	$0	0	
Lake Wohlford Boat House	25453 LAKE WOHLFORD RD	4,000	$11,306	28,438	$0.40	$0	0	
Library	239 S. Kalmia St., Escondido, CA 92025	56,544	$206,379	466,406	$0.44	$13,542	7,469	$1.81
Mathes Center	247 S. Kalmia St., Escondido, CA 92025	8,300	$23,049	54,293	$0.42	$1,746	697	$2.50
North County Mall	270 E VIA RANCHO PKWY, Escondido, CA 92026		$108,728	269,982	$0.40	$120	0	
Oak Hill Activity Center	405 S. Midway Drive, Escondido, CA 92027	1,850	$1,809	4,224	$0.43	$311	103	$3.02
Park Avenue Community Center ("PACC") / Veterans Center	210 E. Park Ave., Escondido, CA 92025	31,764	$73,187	159,914	$0.46	$7,614	3,670	$2.07
Police and Fire Headquarters ("PAFH")	1163 N. Center City Parkway, Escondido, CA 92026	118,790	$693,670	1,969,599	$0.35	$146,243	96,463	$1.52
Public Works Yard	475 N. Spruce St., Escondido, CA 92025	47,074	$93,711	218,099	$0.43	$6,936	3,084	$2.25
Ranger Station - Dixon Lake	1700 La Honda Drive, Escondido, CA 92027	3,084	$55,528	129,964	$0.43	$0	0	
Ranger Station - Lake Wohlford	25130 Lake Wohlford Road, Escondido, CA 92027	874	$7,002	10,062	$0.70	$0	0	
Real Property	210-240 S. Broadway, Escondido, CA 92025	8,999	$3,532	8,107	$0.44	$858	296	$2.90
Recycling Offices	901 W Washington Ave, Escondido, CA 92025	720	$72,797	145,748	$0.50	$0	0	
Water Treatment Plant ("WTP")	3440 E. Valley Parkway, Escondido, CA 92027	19,056	$876,045	2,875,020	$0.30	$0	0	
3rd & Beech Park	299 S. Beech St., Escondido, CA 92025		$0	0		$0	0	
El Norte Park	1375 E. El Norte Parkway, Escondido, CA 92027		$29	35	$0.84	$0	0	
Felicita Mini Park	1693 S. Escondido Blvd., Escondido, CA 92025		$0	0		$0	0	
Grape Day Park	321 N. Broadway, Escondido, CA 92025		$4,308	10,502	$0.41	$0	0	
Grape Day Park Historical Sites	321 N. Broadway, Escondido, CA 92025	12,027	$17,512	43,301	$0.40	$3,668	1,514	$2.42
Grove Park	745 N. Ash St., Escondido, CA 92026		$2,499	6,334	$0.39	$0	0	
Jesmond Dene Park	2401 N. Broadway, Escondido, CA 92026		$25,759	55,100	$0.47	$0	0	
Kit Carson Park	3333 S. Bear Valley Parkway, Escondido, CA 92025	3,440	$136,181	141,964	$0.96	$0	0	
Mayflower Dog Park	3420 Valley Center Road, Escondido, CA 92027		$6,126	14,352	$0.43	$0	0	
Mountain View Park	1160 Citrus Ave., Escondido, CA 92027	1,296	$30,542	58,896	$0.52	$0	0	
Rod McLeod Park	1701 S. Iris Lane, Escondido, CA 92026		$356	859	$0.41	$0	0	
Ryan Park	390 N. Hidden Trails Road, Escondido, CA 92027		$365	890	$0.41	$0	0	
Washington Park	501 N. Rose St., Escondido, CA 92027	7,908	$60,203	167,105	$0.36	$56,168	30,083	$1.87
Westside Park	333 S. Spruce St., Escondido, CA 92025		$290	700	$0.41	$0	0	
Misc.	Various		$49,130	120,434	$0.41	$0	0	

City of Escondido Utility Baseline Summary			1/1/2023 through 12/31/2023					
Site Name	Address	Square Footage	Dollars Electric	kWh	$ / kWh	Dollars Gas	Therms	$ / Therms
Reidy Creek Golf Course	2300 N. Broadway, Escondido, CA 92025	5,146	$44,819	116,772	$0.38	$935	364	$2.57
Vineyard Golf Course	925 San Pasqual Rd., Escondido, CA 92025	7,609	$35	49	$0.71	$0	0	
A-11 Reservoir	1501 W. 11th Ave., Escondido, CA 92029		$934	2,286	$0.41	$0	0	
A-3 Reservoir	2044 Oro Verde Rd., Escondido, CA 92027		$0	0	$0.00	$0	0	
Bear Valley Power Plant	25130 Lake Wohlford Rd. Escondido, CA 92027		$71,555	255,343	$0.28	$0	0	
E. Grove Pump Station	522 S. Hidden Trails, Escondido, CA 92027		$30,900	90,475	$0.34	$0	0	
E. Grove Reservoir	199 Hidden Trails, Escondido, CA 92027		$35,760	83,600	$0.43	$0	0	
Hog Back Pump Station	2547 Mountain View Dr., Escondido, CA 92027		$81,037	233,386	$0.35	$0	0	
Hog Back Reservoir	2601 Mountain View Dr., Escondido, CA 92027		$688	1,593	$0.43	$0	0	
Lift Station No. 1	3680 Sunset Dr., Escondido, CA 92025		$169,781	632,193	$0.27	$0	0	
Lift Station No. 2	2698 S. Escondido Blvd., Escondido, CA 92025		$9,278	34,072	$0.27	$0	0	
Lift Station No. 3	2045 S. Escondido Blvd., Escondido, CA 92025		$97,569	362,519	$0.27	$0	0	
Lift Station No. 4	1750 W. El Norte Parkway, Escondido CA 92026		$19,387	67,115	$0.29	$0	0	
Lift Station No. 5	735 Opper St., Escondido, CA 92029		$2,302	5,726	$0.40	$0	0	
Lift Station No. 6	2297 Felicita Rd., Escondido, CA 92025		$228	113	$2.02	$0	0	
Lift Station No. 7	870 E. 17th Ave., Escondido, CA 92025		$441	992	$0.44	$0	0	
Lift Station No. 8	2472 Eucalyptus Ave., Escondido, CA 92029		$5,232	19,718	$0.27	$0	0	
Lift Station No. 9	1399 Hamilton Ln., Escondido, CA 92029		$15	0		$0	0	
Lift Station No. 10	2356 Willowbrook St., Escondido, CA 92029		$5,330	13,392	$0.40	$0	0	
Lift Station No. 11	2451 Bernardo Ave., Escondido, CA 92025		$15	0		$0	0	
Lift Station No. 12	1400 Country Club Dr., Escondido, CA 92029		$10,942	27,620	$0.40	$0	0	
Lift Station No. 13	20950 San Pasqual Rd., Escondido, CA 92025		$21,283	74,238	$0.29	$0	0	
Lift Station No. 14	397 Oak Valley Ln. Escondido, CA 92027		$3,261	11,804	$0.28	$0	0	
Lindley Reservoir	642 Hubbard Ave., Escondido, CA 92026		$4,819	11,973	$0.40	$0	0	
Park Hill Reservoir	1535 Park Hill Ln., Escondido, CA 92025		$8,227	20,059	$0.41	$0	0	
Reed Reservoir	522 S. Hidden Trails Rd., Escondido, CA 92025		$2,613	6,634	$0.39	$0	0	
Rincon Power Plant	0 RINCON PWR PLANT D		$36,143	88,099	$0.41	$0	0	
Royal Crest Reservoir	2421 Royal Crest Dr., Escondido, CA 92025		$246	589	$0.42	$0	0	
Vista Verde Pump Station	1423 Vista Verde Dr., Escondido, CA 92026		$96,402	293,225	$0.33	$0	0	
Vista Verde Reservoir	1927 Vista Verde Way, Escondido, CA 92026		$1,311	3,286	$0.40	$0	0	
LS1	Various		$266,519	565,593	$0.47	$0	0	
LS2	Various		$948,936	3,178,074	$0.30	$0	0	
Municipal Parking Lots 1-7	Various		$11,797	29,169	$0.40	$0	0	
Traffic Control	Various		$179,392	591,485	$0.30	$0	0	
Total		**858,652**	**$8,130,348**	**22,680,312**	**$0.36**	**$912,223**	**572,933**	**$1.59**

Attachment "C"
Standards of Operation for HVAC & Lighting

STANDARDS OF OPERATION

The hours of operation for the Purchaser's HVAC and lighting systems, located on the following pages, were used to calculate the energy savings for this Agreement and will be used in all M&V calculations.

City of Escondido HVAC Standards of Operations

Facility	Control System	Area Served	Business Day HVAC Schedule		Non-Business Day HVAC Schedule		Temperature Setpoints	
			Start Time	Stop Time	Start Time	Stop Time	Cooling (All Areas)	Heating (All Areas)
General City Energy Policy	WiFi Programmable Thermostats & Energy Management System	All Space Types	30 Min Before Start of Business Day	Close of Business Day	Unoccupied mode with Local Button Override option. Special Event scheduling.		Occupied Setpoint[2]: 76 °F (+/-2) Unoccupied Setpoint: 90 °F Occupied Setpoint will have ± 2°F Local Adjustability[2] Areas with Motion Sensors[2]: Soft Set Back (No Motion for 15 minutes): 80 °F Hard Set Back (No Motion for 30 minutes): 90 °F	Occupied Setpoint[2]: 68 °F (+/-2) Unoccupied Setpoint: 55 °F Occupied Setpoint will have ± 2°F Local Adjustability[2] Areas with Motion Sensors[2]: Soft Set Back (No Motion for 15 minutes): 64 °F Hard Set Back (No Motion for 30 minutes): 55 °F
City Hall	Building Automation System	Offices Conference Rooms Lobby	30 Min Before Start of Business Day	Close of Business Day	Unoccupied mode with Local Button Override option. Special Event scheduling.		Occupied Setpoint[2]: 76 °F (+/-2) Unoccupied Setpoint: 90 °F Occupied Setpoint will have ± 2°F Local Adjustability[2] Areas with Motion Sensors[2]: Soft Set Back (No Motion for 15 minutes): 80 °F Hard Set Back (No Motion for 30 minutes): 90 °F	Occupied Setpoint[2]: 68 °F (+/-2) Unoccupied Setpoint: 55 °F Occupied Setpoint will have ± 2°F Local Adjustability[2] Areas with Motion Sensors[2]: Soft Set Back (No Motion for 15 minutes): 64 °F Hard Set Back (No Motion for 30 minutes): 55 °F
		Council Chambers	HVAC provided by Local Button Overrides[2]		HVAC provided by Local Button Overrides[2]			
CCAE & Central Plant	Building Automation System	Offices Conference Rooms Gathering Spaces Theater	30 Min Before Start of Business Day	Close of Business Day	Unoccupied mode with Local Button Override option. Special Event scheduling.		Occupied Setpoint[2]: 76 °F (+/-2) Unoccupied Setpoint: 90 °F Occupied Setpoint will have ± 2°F Local Adjustability[2] Areas with Motion Sensors[2]: Soft Set Back (No Motion for 15 minutes): 80 °F Hard Set Back (No Motion for 30 minutes): 90 °F	Occupied Setpoint[2]: 68 °F (+/-2) Unoccupied Setpoint: 55 °F Occupied Setpoint will have ± 2°F Local Adjustability[2] Areas with Motion Sensors[2]: Soft Set Back (No Motion for 15 minutes): 64 °F Hard Set Back (No Motion for 30 minutes): 55 °F
		Event Spaces	HVAC provided by Local Button Overrides[2]		HVAC provided by Local Button Overrides[2]			
Daley Ranch Historic House	WiFi Programmable Thermostats	Home Spaces (Typically unoccupied)	HVAC provided by Local Button Overrides[2]		HVAC provided by Local Button Overrides[2]		Occupied Setpoint[2]: 76 °F (+/-2) Unoccupied Setpoint: 90 °F Occupied Setpoint will have ± 2°F Local Adjustability[2] Areas with Motion Sensors[2]: Soft Set Back (No Motion for 15 minutes): 80 °F Hard Set Back (No Motion for 30 minutes): 90 °F	Occupied Setpoint[2]: 68 °F (+/-2) Unoccupied Setpoint: 55 °F Occupied Setpoint will have ± 2°F Local Adjustability[2] Areas with Motion Sensors[2]: Soft Set Back (No Motion for 15 minutes): 64 °F Hard Set Back (No Motion for 30 minutes): 55 °F
Don E. Anderson Building	WiFi Programmable Thermostats	Offices Classrooms	30 Min Before Start of Business Day	Close of Business Day	Unoccupied mode with Local Button Override option.		Occupied Setpoint[2]: 76 °F (+/-2) Unoccupied Setpoint: 90 °F Occupied Setpoint will have ± 2°F Local Adjustability[2] Areas with Motion Sensors[2]: Soft Set Back (No Motion for 15 minutes): 80 °F Hard Set Back (No Motion for 30 minutes): 90 °F	Occupied Setpoint[2]: 68 °F (+/-2) Unoccupied Setpoint: 55 °F Occupied Setpoint will have ± 2°F Local Adjustability[2] Areas with Motion Sensors[2]: Soft Set Back (No Motion for 15 minutes): 64 °F Hard Set Back (No Motion for 30 minutes): 55 °F
East Valley Community Center (EVCC)	Building Automation System	Offices Gymnasiums Classrooms Gathering Spaces	30 Min Before Start of Business Day	Close of Business Day	Unoccupied mode with Local Button Override option. Special Event scheduling.		Occupied Setpoint[2]: 76 °F (+/-2) Unoccupied Setpoint: 90 °F Occupied Setpoint will have ± 2°F Local Adjustability[2] Areas with Motion Sensors[2]: Soft Set Back (No Motion for 15 minutes): 80 °F Hard Set Back (No Motion for 30 minutes): 90 °F	Occupied Setpoint[2]: 68 °F (+/-2) Unoccupied Setpoint: 55 °F Occupied Setpoint will have ± 2°F Local Adjustability[2] Areas with Motion Sensors[2]: Soft Set Back (No Motion for 15 minutes): 64 °F Hard Set Back (No Motion for 30 minutes): 55 °F
		Event Spaces	HVAC provided by Local Button Overrides[2]		HVAC provided by Local Button Overrides[2]			
Fire Station No. 1	Building Automation System	Dormatory Kitchen Gathering Spaces	24/7		N/A		Occupied Setpoint[2]: 76 °F (+/-2) Unoccupied Setpoint: 90 °F Occupied Setpoint will have ± 2°F Local Adjustability[2] Areas with Motion Sensors[2]: Soft Set Back (No Motion for 15 minutes): 80 °F Hard Set Back (No Motion for 30 minutes): 90 °F	Occupied Setpoint[2]: 68 °F (+/-2) Unoccupied Setpoint: 55 °F Occupied Setpoint will have ± 2°F Local Adjustability[2] Areas with Motion Sensors[2]: Soft Set Back (No Motion for 15 minutes): 64 °F Hard Set Back (No Motion for 30 minutes): 55 °F
		Offices	30 Min Before Start of Business Day	Close of Business Day	HVAC provided by Local Button Overrides[2]			
Fire Station No. 2	Building Automation System	Dormatory Kitchen Gathering Spaces	24/7		N/A		Occupied Setpoint[2]: 76 °F (+/-2) Unoccupied Setpoint: 90 °F Occupied Setpoint will have ± 2°F Local Adjustability[2] Areas with Motion Sensors[2]: Soft Set Back (No Motion for 15 minutes): 80 °F Hard Set Back (No Motion for 30 minutes): 90 °F	Occupied Setpoint[2]: 68 °F (+/-2) Unoccupied Setpoint: 55 °F Occupied Setpoint will have ± 2°F Local Adjustability[2] Areas with Motion Sensors[2]: Soft Set Back (No Motion for 15 minutes): 64 °F Hard Set Back (No Motion for 30 minutes): 55 °F
		Offices	30 Min Before Start of Business Day	Close of Business Day	HVAC provided by Local Button Overrides[2]			
Fire Station No. 3	Building Automation System	Dormatory Kitchen Gathering Spaces	24/7		N/A		Occupied Setpoint[2]: 76 °F (+/-2) Unoccupied Setpoint: 90 °F Occupied Setpoint will have ± 2°F Local Adjustability[2] Areas with Motion Sensors[2]: Soft Set Back (No Motion for 15 minutes): 80 °F Hard Set Back (No Motion for 30 minutes): 90 °F	Occupied Setpoint[2]: 68 °F (+/-2) Unoccupied Setpoint: 55 °F Occupied Setpoint will have ± 2°F Local Adjustability[2] Areas with Motion Sensors[2]: Soft Set Back (No Motion for 15 minutes): 64 °F Hard Set Back (No Motion for 30 minutes): 55 °F
		Offices	30 Min Before Start of Business Day	Close of Business Day	HVAC provided by Local Button Overrides[2]			
Fire Station No. 4	Building Automation System	Dormatory Kitchen Gathering Spaces	24/7		Unoccupied mode with Local Button Override option. Special Event scheduling.		Occupied Setpoint[2]: 76 °F (+/-2) Unoccupied Setpoint: 90 °F Occupied Setpoint will have ± 2°F Local Adjustability[2] Areas with Motion Sensors[2]: Soft Set Back (No Motion for 15 minutes): 80 °F	Occupied Setpoint[2]: 68 °F (+/-2) Unoccupied Setpoint: 55 °F Occupied Setpoint will have ± 2°F Local Adjustability[2] Areas with Motion Sensors[2]: Soft Set Back (No Motion for 15 minutes): 64 °F

City of Escondido HVAC Standards of Operations

Facility	Control System	Area Served	Business Day HVAC Schedule		Non-Business Day HVAC Schedule		Temperature Setpoints	
			Start Time	Stop Time	Start Time	Stop Time	Cooling (All Areas)	Heating (All Areas)
General City Energy Policy	WiFi Programmable Thermostats & Energy Management System	All Space Types	30 Min Before Start of Business Day	Close of Business Day	Unoccupied mode with Local Button Override option. Special Event scheduling.		Occupied Setpoint[2]: 76 °F (+/-2) Unoccupied Setpoint: 90 °F Occupied Setpoint will have ± 2°F Local Adjustability[2] Areas with Motion Sensors[2]: Soft Set Back (No Motion for 15 minutes): 80 °F Hard Set Back (No Motion for 30 minutes): 90 °F	Occupied Setpoint[2]: 68 °F (+/-2) Unoccupied Setpoint: 55 °F Occupied Setpoint will have ± 2°F Local Adjustability[2] Areas with Motion Sensors[2]: Soft Set Back (No Motion for 15 minutes): 64 °F Hard Set Back (No Motion for 30 minutes): 55 °F
		Offices	30 Min Before Start of Business Day	Close of Business Day	HVAC provided by Local Button Overrides[2]		Hard Set Back (No Motion for 30 minutes): 90 °F	Hard Set Back (No Motion for 30 minutes): 55 °F
Fire Station No. 5	Building Automation System	Dormatory Kitchen Gathering Spaces	24/7		N/A		Occupied Setpoint[2]: 76 °F (+/-2) Unoccupied Setpoint: 90 °F Occupied Setpoint will have ± 2°F Local Adjustability[2] Areas with Motion Sensors[2]: Soft Set Back (No Motion for 15 minutes): 80 °F	Occupied Setpoint[2]: 68 °F (+/-2) Unoccupied Setpoint: 55 °F Occupied Setpoint will have ± 2°F Local Adjustability[2] Areas with Motion Sensors[2]: Soft Set Back (No Motion for 15 minutes): 64 °F
		Offices	30 Min Before Start of Business Day	Close of Business Day	HVAC provided by Local Button Overrides[2]		Hard Set Back (No Motion for 30 minutes): 90 °F	Hard Set Back (No Motion for 30 minutes): 55 °F
Fire Station No. 6	Building Automation System	Dormatory Kitchen Gathering Spaces	24/7		N/A		Occupied Setpoint[2]: 76 °F (+/-2) Unoccupied Setpoint: 90 °F Occupied Setpoint will have ± 2°F Local Adjustability[2] Areas with Motion Sensors[2]: Soft Set Back (No Motion for 15 minutes): 80 °F	Occupied Setpoint[2]: 68 °F (+/-2) Unoccupied Setpoint: 55 °F Occupied Setpoint will have ± 2°F Local Adjustability[2] Areas with Motion Sensors[2]: Soft Set Back (No Motion for 15 minutes): 64 °F
		Offices	30 Min Before Start of Business Day	Close of Business Day	HVAC provided by Local Button Overrides[2]		Hard Set Back (No Motion for 30 minutes): 90 °F	Hard Set Back (No Motion for 30 minutes): 55 °F
Fire Station No. 7	Building Automation System	Dormatory Kitchen Gathering Spaces	24/7		N/A		Occupied Setpoint[2]: 76 °F (+/-2) Unoccupied Setpoint: 90 °F Occupied Setpoint will have ± 2°F Local Adjustability[2] Areas with Motion Sensors[2]: Soft Set Back (No Motion for 15 minutes): 80 °F	Occupied Setpoint[2]: 68 °F (+/-2) Unoccupied Setpoint: 55 °F Occupied Setpoint will have ± 2°F Local Adjustability[2] Areas with Motion Sensors[2]: Soft Set Back (No Motion for 15 minutes): 64 °F
		Offices	30 Min Before Start of Business Day	Close of Business Day	HVAC provided by Local Button Overrides[2]		Hard Set Back (No Motion for 30 minutes): 90 °F	Hard Set Back (No Motion for 30 minutes): 55 °F
Library	Building Automation System	Offices Conference Rooms Study / Reading Areas Lobby	30 Min Before Start of Business Day	Close of Business Day	Unoccupied mode with Local Button Override option. Special Event scheduling.		Occupied Setpoint[2]: 76 °F (+/-2) Unoccupied Setpoint: 90 °F Occupied Setpoint will have ± 2°F Local Adjustability[2] Areas with Motion Sensors[2]: Soft Set Back (No Motion for 15 minutes): 80 °F	Occupied Setpoint[2]: 68 °F (+/-2) Unoccupied Setpoint: 55 °F Occupied Setpoint will have ± 2°F Local Adjustability[2] Areas with Motion Sensors[2]: Soft Set Back (No Motion for 15 minutes): 64 °F
		Special Events	HVAC provided by Local Button Overrides[2]		HVAC provided by Local Button Overrides[2]		Hard Set Back (No Motion for 30 minutes): 90 °F	Hard Set Back (No Motion for 30 minutes): 55 °F
Mathes Center	WiFi Programmable Thermostats	Offices History Archives	30 Min Before Start of Business Day	Close of Business Day	Unoccupied mode with Local Button Override option.		Occupied Setpoint[2]: 76 °F (+/-2) Unoccupied Setpoint: 90 °F Occupied Setpoint will have ± 2°F Local Adjustability[2] Areas with Motion Sensors[2]: Soft Set Back (No Motion for 15 minutes): 80 °F	Occupied Setpoint[2]: 68 °F (+/-2) Unoccupied Setpoint: 55 °F Occupied Setpoint will have ± 2°F Local Adjustability[2] Areas with Motion Sensors[2]: Soft Set Back (No Motion for 15 minutes): 64 °F
		Activity Spaces	HVAC provided by Local Button Overrides[2]		HVAC provided by Local Button Overrides[2]		Hard Set Back (No Motion for 30 minutes): 90 °F	Hard Set Back (No Motion for 30 minutes): 55 °F
Oak Hill Activity Center	WiFi Programmable Thermostats	Office	30 Min Before Start of Business Day	Close of Business Day	Unoccupied mode with Local Button Override option.		Occupied Setpoint[2]: 76 °F (+/-2) Unoccupied Setpoint: 90 °F Occupied Setpoint will have ± 2°F Local Adjustability[2] Areas with Motion Sensors[2]: Soft Set Back (No Motion for 15 minutes): 80 °F	Occupied Setpoint[2]: 68 °F (+/-2) Unoccupied Setpoint: 55 °F Occupied Setpoint will have ± 2°F Local Adjustability[2] Areas with Motion Sensors[2]: Soft Set Back (No Motion for 15 minutes): 64 °F
		Activity Spaces	HVAC provided by Local Button Overrides[2]		HVAC provided by Local Button Overrides[2]		Hard Set Back (No Motion for 30 minutes): 90 °F	Hard Set Back (No Motion for 30 minutes): 55 °F
Park Ave. Community Center (PACC)	Building Automation System	Offices Classrooms Activity Areas Cafeteria	30 Min Before Start of Business Day	Close of Business Day	Unoccupied mode with Local Button Override option. Special Event scheduling.		Occupied Setpoint[2]: 76 °F (+/-2) Unoccupied Setpoint: 90 °F Occupied Setpoint will have ± 2°F Local Adjustability[2] Areas with Motion Sensors[2]: Soft Set Back (No Motion for 15 minutes): 80 °F	Occupied Setpoint[2]: 68 °F (+/-2) Unoccupied Setpoint: 55 °F Occupied Setpoint will have ± 2°F Local Adjustability[2] Areas with Motion Sensors[2]: Soft Set Back (No Motion for 15 minutes): 64 °F
		Event Spaces	HVAC provided by Local Button Overrides[2]		HVAC provided by Local Button Overrides[2]		Hard Set Back (No Motion for 30 minutes): 90 °F	Hard Set Back (No Motion for 30 minutes): 55 °F
Police & Fire Headquarters (PAFH)	Building Automation System	Offices Conference Rooms Lobby	30 Min Before Start of Business Day	Close of Business Day	Unoccupied mode with Local Button Override option. Special Event scheduling.		Occupied Setpoint[2]: 76 °F (+/-2) Unoccupied Setpoint: 90 °F Occupied Setpoint will have ± 2°F Local Adjustability[2] Areas with Motion Sensors[2]: Soft Set Back (No Motion for 15 minutes): 80 °F	Occupied Setpoint[2]: 68 °F (+/-2) Unoccupied Setpoint: 55 °F Occupied Setpoint will have ± 2°F Local Adjustability[2] Areas with Motion Sensors[2]: Soft Set Back (No Motion for 15 minutes): 64 °F
		24/7 Areas	24/7		24/7		Hard Set Back (No Motion for 30 minutes): 90 °F	Hard Set Back (No Motion for 30 minutes): 55 °F
Public Works Yard	WiFi Programmable Thermostats	Offices Conference Rooms	30 Min Before Start of Business Day	Close of Business Day	Unoccupied mode with Local Button Override option.		Occupied Setpoint[2]: 76 °F (+/-2) Unoccupied Setpoint: 90 °F Occupied Setpoint will have ± 2°F Local Adjustability[2] Areas with Motion Sensors[2]:	Occupied Setpoint[2]: 68 °F (+/-2) Unoccupied Setpoint: 55 °F Occupied Setpoint will have ± 2°F Local Adjustability[2] Areas with Motion Sensors[2]:

City of Escondido HVAC Standards of Operations

Facility	Control System	Area Served	Business Day HVAC Schedule		Non-Business Day HVAC Schedule		Temperature Setpoints	
			Start Time	Stop Time	Start Time	Stop Time	Cooling (All Areas)	Heating (All Areas)
General City Energy Policy	WiFi Programmable Thermostats & Energy Management System	All Space Types	30 Min Before Start of Business Day	Close of Business Day	Unoccupied mode with Local Button Override option. Special Event scheduling.		Occupied Setpoint[2]: 76 °F (+/-2) Unoccupied Setpoint: 90 °F Occupied Setpoint will have ± 2°F Local Adjustability[2] Areas with Motion Sensors[2]: Soft Set Back (No Motion for 15 minutes): 80 °F Hard Set Back (No Motion for 30 minutes): 90 °F	Occupied Setpoint[2]: 68 °F (+/-2) Unoccupied Setpoint: 55 °F Occupied Setpoint will have ± 2°F Local Adjustability[2] Areas with Motion Sensors[2]: Soft Set Back (No Motion for 15 minutes): 64 °F Hard Set Back (No Motion for 30 minutes): 55 °F
							Soft Set Back (No Motion for 15 minutes): 80 °F Hard Set Back (No Motion for 30 minutes): 90 °F	Soft Set Back (No Motion for 15 minutes): 64 °F Hard Set Back (No Motion for 30 minutes): 55 °F
Ranger Station - Dixon Lake	WiFi Programmable Thermostats	Offices	30 Min Before Start of Business Day	Close of Business Day	Unoccupied mode with Local Button Override option.		Occupied Setpoint[2]: 76 °F (+/-2) Unoccupied Setpoint: 90 °F Occupied Setpoint will have ± 2°F Local Adjustability[2] Areas with Motion Sensors[2]: Soft Set Back (No Motion for 15 minutes): 80 °F Hard Set Back (No Motion for 30 minutes): 90 °F	Occupied Setpoint[2]: 68 °F (+/-2) Unoccupied Setpoint: 55 °F Occupied Setpoint will have ± 2°F Local Adjustability[2] Areas with Motion Sensors[2]: Soft Set Back (No Motion for 15 minutes): 64 °F Hard Set Back (No Motion for 30 minutes): 55 °F
Ranger Station - Lake Wohlford	WiFi Programmable Thermostats	Offices	30 Min Before Start of Business Day	Close of Business Day	Unoccupied mode with Local Button Override option.		Occupied Setpoint[2]: 76 °F (+/-2) Unoccupied Setpoint: 90 °F Occupied Setpoint will have ± 2°F Local Adjustability[2] Areas with Motion Sensors[2]: Soft Set Back (No Motion for 15 minutes): 80 °F Hard Set Back (No Motion for 30 minutes): 90 °F	Occupied Setpoint[2]: 68 °F (+/-2) Unoccupied Setpoint: 55 °F Occupied Setpoint will have ± 2°F Local Adjustability[2] Areas with Motion Sensors[2]: Soft Set Back (No Motion for 15 minutes): 64 °F Hard Set Back (No Motion for 30 minutes): 55 °F
Real Property	WiFi Programmable Thermostats	Offices	30 Min Before Start of Business Day	Close of Business Day	Unoccupied mode with Local Button Override option.		Occupied Setpoint[2]: 76 °F (+/-2) Unoccupied Setpoint: 90 °F Occupied Setpoint will have ± 2°F Local Adjustability[2] Areas with Motion Sensors[2]: Soft Set Back (No Motion for 15 minutes): 80 °F Hard Set Back (No Motion for 30 minutes): 90 °F	Occupied Setpoint[2]: 68 °F (+/-2) Unoccupied Setpoint: 55 °F Occupied Setpoint will have ± 2°F Local Adjustability[2] Areas with Motion Sensors[2]: Soft Set Back (No Motion for 15 minutes): 64 °F Hard Set Back (No Motion for 30 minutes): 55 °F
		Gathering Spaces	HVAC provided by Local Button Overrides[2]		HVAC provided by Local Button Overrides[2]			
Recycling Offices	WiFi Programmable Thermostats	Offices	30 Min Before Start of Business Day	Close of Business Day	Unoccupied mode with Local Button Override option.		Occupied Setpoint[2]: 76 °F (+/-2) Unoccupied Setpoint: 90 °F Occupied Setpoint will have ± 2°F Local Adjustability[2] Areas with Motion Sensors[2]: Soft Set Back (No Motion for 15 minutes): 80 °F Hard Set Back (No Motion for 30 minutes): 90 °F	Occupied Setpoint[2]: 68 °F (+/-2) Unoccupied Setpoint: 55 °F Occupied Setpoint will have ± 2°F Local Adjustability[2] Areas with Motion Sensors[2]: Soft Set Back (No Motion for 15 minutes): 64 °F Hard Set Back (No Motion for 30 minutes): 55 °F
Grape Day Park Historical Sites	WiFi Programmable Thermostats	Offices	30 Min Before Start of Business Day	Close of Business day	Unoccupied mode with Local Button Override option. Special Event scheduling.		Occupied Setpoint[2]: 76 °F (+/-2) Unoccupied Setpoint: 90 °F Occupied Setpoint will have ± 2°F Local Adjustability[2] Areas with Motion Sensors[2]: Soft Set Back (No Motion for 15 minutes): 80 °F Hard Set Back (No Motion for 30 minutes): 90 °F	Occupied Setpoint[2]: 68 °F (+/-2) Unoccupied Setpoint: 55 °F Occupied Setpoint will have ± 2°F Local Adjustability[2] Areas with Motion Sensors[2]: Soft Set Back (No Motion for 15 minutes): 64 °F Hard Set Back (No Motion for 30 minutes): 55 °F
		Museum	HVAC provided by Local Button Overrides[2]		HVAC provided by Local Button Overrides[2]			
Kit Carson Park	WiFi Programmable Thermostats	Offices	30 Min Before Start of Business Day	Close of Business day	Unoccupied mode with Local Button Override option. Special Event scheduling.		Occupied Setpoint[2]: 76 °F (+/-2) Unoccupied Setpoint: 90 °F Occupied Setpoint will have ± 2°F Local Adjustability[2] Areas with Motion Sensors[2]: Soft Set Back (No Motion for 15 minutes): 80 °F Hard Set Back (No Motion for 30 minutes): 90 °F	Occupied Setpoint[2]: 68 °F (+/-2) Unoccupied Setpoint: 55 °F Occupied Setpoint will have ± 2°F Local Adjustability[2] Areas with Motion Sensors[2]: Soft Set Back (No Motion for 15 minutes): 64 °F Hard Set Back (No Motion for 30 minutes): 55 °F
		Event Spaces	HVAC provided by Local Button Overrides[2]		HVAC provided by Local Button Overrides[2]			
Washington Park	WiFi Programmable Thermostats	Offices Gathering Spaces	30 Min Before Start of Business Day	Close of Business day	Unoccupied mode with Local Button Override option. Special Event scheduling.		Occupied Setpoint[2]: 76 °F (+/-2) Unoccupied Setpoint: 90 °F Occupied Setpoint will have ± 2°F Local Adjustability[2] Areas with Motion Sensors[2]: Soft Set Back (No Motion for 15 minutes): 80 °F	Occupied Setpoint[2]: 68 °F (+/-2) Unoccupied Setpoint: 55 °F Occupied Setpoint will have ± 2°F Local Adjustability[2] Areas with Motion Sensors[2]: Soft Set Back (No Motion for 15 minutes): 64 °F
		Event Spaces	HVAC provided by Local Button Overrides[2]		HVAC provided by Local Button Overrides[2]		Occupied Setpoint[2]: 90 °F	Occupied Setpoint[2]: 55 °F
Dixon Lake Cottage Rental	WiFi Programmable Thermostats	Home Spaces	HVAC provided by Local Button Overrides[2]		Unoccupied mode with Local Button Override option.		Occupied Setpoint[2]: 76 °F (+/-2) Unoccupied Setpoint: 90 °F Occupied Setpoint will have ± 5°F Local Adjustability[2] °F Areas with Motion Sensors[2]: °F Soft Set Back (No Motion for 15 minutes): 80 °F Hard Set Back (No Motion for 30 minutes): 90 °F	Occupied Setpoint[2]: 68 °F (+/-2) Unoccupied Setpoint: 55 °F Occupied Setpoint will have ± 5°F Local Adjustability[2] °F Areas with Motion Sensors[2]: °F Soft Set Back (No Motion for 15 minutes): 64 °F Hard Set Back (No Motion for 30 minutes): 55 °F
Reidy Creek Golf Course	WiFi Programmable Thermostats	Offices Lobby Restaurant Retail	30 Min Before Start of Business Day	Close of Business Day	Unoccupied mode with Local Button Override option. Special Event scheduling.		Occupied Setpoint[2]: 76 °F (+/-2) Unoccupied Setpoint: 90 °F Occupied Setpoint will have ± 2°F Local Adjustability[2] °F Areas with Motion Sensors[2]: °F Soft Set Back (No Motion for 15 minutes): 80 °F Hard Set Back (No Motion for 30 minutes): 90 °F	Occupied Setpoint[2]: 68 °F (+/-2) Unoccupied Setpoint: 55 °F 0 Occupied Setpoint will have ± 2°F Local Adjustability[2] °F 0 Areas with Motion Sensors[2]: °F 0 Soft Set Back (No Motion for 15 minutes): 64 °F 0 Hard Set Back (No Motion for 30 minutes): 55 °F 0
		Event Spaces	HVAC provided by Local Button Overrides[2]		HVAC provided by Local Button Overrides[2]			
		Offices					Occupied Setpoint[2]: 76 °F (+/-2)	Occupied Setpoint[2]: 68 °F (+/-2)

City of Escondido HVAC Standards of Operations

Facility	Control System	Area Served	Business Day HVAC Schedule		Non-Business Day HVAC Schedule		Temperature Setpoints	
			Start Time	Stop Time	Start Time	Stop Time	Cooling (All Areas)	Heating (All Areas)
General City Energy Policy	WiFi Programmable Thermostats & Energy Management System	All Space Types	30 Min Before Start of Business Day	Close of Business Day	Unoccupied mode with Local Button Override option. Special Event scheduling.		Occupied Setpoint[2]: 76 °F (+/-2) Unoccupied Setpoint: 90 °F Occupied Setpoint will have ± 2°F Local Adjustability[2] Areas with Motion Sensors[2]: Soft Set Back (No Motion for 15 minutes): 80 °F Hard Set Back (No Motion for 30 minutes): 90 °F	Occupied Setpoint[2]: 68 °F (+/-2) Unoccupied Setpoint: 55 °F Occupied Setpoint will have ± 2°F Local Adjustability[2] Areas with Motion Sensors[2]: Soft Set Back (No Motion for 15 minutes): 64 °F Hard Set Back (No Motion for 30 minutes): 55 °F
Vineyard Golf Course	WiFi Programmable Thermostats	Offices Lobby Restaurant Retail	30 Min Before Start of Business Day	Close of Business Day	Unoccupied mode with Local Button Override option. Special Event scheduling.		Unoccupied Setpoint: 90 °F Occupied Setpoint will have ± 2°F Local Adjustability[2] °F Areas with Motion Sensors[2]: °F Soft Set Back (No Motion for 15 minutes): 80 °F Hard Set Back (No Motion for 30 minutes): 90 °F	Unoccupied Setpoint: 55 °F Occupied Setpoint will have ± 2°F Local Adjustability[2] °F Areas with Motion Sensors[2]: °F Soft Set Back (No Motion for 15 minutes): 64 °F Hard Set Back (No Motion for 30 minutes): 55 °F
		Event Spaces	HVAC provided by Local Button Overrides[2]		HVAC provided by Local Button Overrides[2]			
HARRF	Building Automation System	Offices Conference Rooms Lobby	30 Min Before Start of Business Day	Close of Business Day	Unoccupied mode with Local Button Override option.		Occupied Setpoint[2]: 76 °F (+/-2) Unoccupied Setpoint: 90 °F Occupied Setpoint will have ± 2°F Local Adjustability[2] °F Areas with Motion Sensors[2]: °F Soft Set Back (No Motion for 15 minutes): 80 °F Hard Set Back (No Motion for 30 minutes): 90 °F	Occupied Setpoint[2]: 68 °F (+/-2) Unoccupied Setpoint: 55 °F Occupied Setpoint will have ± 2°F Local Adjustability[2] °F Areas with Motion Sensors[2]: °F Soft Set Back (No Motion for 15 minutes): 64 °F Hard Set Back (No Motion for 30 minutes): 55 °F
		24 hour office spaces	24/7		24/7			
Water Treatment Plant	WiFi Programmable Thermostats	Offices Conference Rooms Lobby	30 Min Before Start of Business Day	Close of Business Day	Unoccupied mode with Local Button Override option.		Occupied Setpoint[2]: 76 °F (+/-2) Unoccupied Setpoint: 90 °F Occupied Setpoint will have ± 2°F Local Adjustability[2] °F Areas with Motion Sensors[2]: °F Soft Set Back (No Motion for 15 minutes): 80 °F Hard Set Back (No Motion for 30 minutes): 90 °F	Occupied Setpoint[2]: 68 °F (+/-2) Unoccupied Setpoint: 55 °F Occupied Setpoint will have ± 2°F Local Adjustability[2] °F Areas with Motion Sensors[2]: °F Soft Set Back (No Motion for 15 minutes): 64 °F Hard Set Back (No Motion for 30 minutes): 55 °F
		24 hour office spaces	24/7		24/7			

1. Optimum Start required per 2019 Title 24 for systems with DDC Building Automation. Optimum Start is a control strategy implemented through alogorithms programmed to "learn" the precise time required for the HVAC system to reach setpoint through historical evaluations of building
2. Only the newly installed control systems will be capable of these features (local setpoint adjustments and set back controls). It is recommened as part of the City Energy Policy that these spaces be used for any before/after/special event Bldg activities.

City of Escondido											Lighting Standards of Ope

Site Name	24/7	Admin Open area	Dorm	Dusk/ <Dawn	Dusk/ <Dawn/ Sports	Dusk/ Dawn	Garage	Gym/ MPR	Hallway	Kitchen	Mech/ Elec/ Strg	Office Admin	Private Restroom	Process	Restroom
Boys & Girls Club / Jim Stone Pool						4380					400				
City Hall & CCAE	8760	3500				4380			3950		400	2600			3300
Community Child Development Center												2600			
Daley Ranch Maintenance Facility						4380	2000					2600			
Don E. Anderson Building												2600			
East Valley Community Center ("EVCC") / Heritage Academy		2950				4380		3550	3550						3300
Fire Station No. 1	8760	1500	300			4380	3000		1300	1300	400	2600	950		3300
Fire Station No. 2		1500	300			4380	3000		1300	1300	400	2600			3300
Fire Station No. 3		1500	300			4380	3000		1300	1300	400	2600			3300
Fire Station No. 4		1500	300			4380	3000		1300	1300	400	2600			3300
Fire Station No. 5		1500	300			4380	3000		1300	1300	400	2600			3300
Fire Station No. 6		1500	300			4380	3000		1300	1300	400	2600	950		
Fire Station No. 7		1500	300			4380	3000		1300	1300	400	2600			3300
Hale Avenue Resource & Recovery Facility ("HARRF")		3500		600		4380								3900	
Hubbard Hill						4380					400				
Lake Wohlford Boat House		3500				4380						2600			
Leased Industrial Building (vacant)						4380					400				
Library	8760	3500				4380			3950	2500	400	2600			3300
Mathes Center		3500				4380			3950		400	2600			3300
North County Mall						4380					400				
Oak Hill Activity Center		1200				4380					400	1200			1200
Park Avenue Community Center ("PACC") / Veterans Center		3500				4380			3950	2500	400				3300
Police and Fire Headquarters ("PAFH")		3500				4380			4800		400	2600			3300
Public Works Yard												2600			

Site Name	24/7	Admin Open area	Dorm	Dusk/ <Dawn	Dusk/ <Dawn/ Sports	Dusk/ Dawn	Garage	Gym/ MPR	Hallway	Kitchen	Mech/ Elec/ Strg	Office Admin	Private Restroom	Process	Restroom
Ranger Station - Dixon Lake		3500				4380					400	2600			
Ranger Station - Lake Wohlford						4380						2600			
Real Property						4380						2600			
Recycling Offices		3500		600		4380						2600		3900	3300
Warehouse (vacant)						4380					400				
Water Treatment Plant ("WTP")				600							400	2600		3900	
3rd & Beech Park						4380									
El Norte Park						4380									
Felicita Mini Park						4380									
Grape Day Park						4380									
Grape Day Park Historical Sites						4380					400				
Grove Park						4380									3300
Jesmond Dene Park					500	4380					400				3300
Kit Carson Park		3500		600		4380	2000		2500		400	2600			3300
Mayflower Dog Park						4380					400				
Mountain View Park		3500		600		4380					400				
Rod McLeod Park						4380					400				3300
Ryan Park					500	4380			3900		400				3300
Washington Park					500	4380						2600			

Attachment "2"

ESCROW AND ACCOUNT CONTROL AGREEMENT

This Escrow and Account Control Agreement (this *"Agreement"*), dated as of August 28, 2025, by and among Banc of America Public Capital Corp, a Kansas corporation (together with its successors and assigns, hereinafter referred to as *"Lessor"*), City of Escondido, a city existing under the laws of the State of California (hereinafter referred to as *"Lessee"*) and UMB Bank, National Association, a national banking association organized under the laws of the United States of America (hereinafter referred to as *"Escrow Agent"*).

Reference is made to that certain Equipment Lease/Purchase Agreement dated as of August 28, 2025 between Lessor and Lessee (hereinafter referred to as the *"Lease"*), covering the acquisition and lease of certain Equipment described therein (the *"Equipment"*). It is a requirement of the Lease that the Acquisition Amount ($46,000,000.00) be deposited into a segregated escrow account under terms satisfactory to Lessor, for the purpose of fully funding the Lease, and providing a mechanism for the application of such amounts to the purchase of and payment for the Equipment (with the final 10% of the Acquisition Amount disbursed only after payment of the Lessee's Contribution in accordance with Section 4.08 of the Lease).

NOW, THEREFORE, in consideration of the mutual promises contained herein and other good and valuable consideration, the receipt and sufficiency of which are hereby acknowledged, the parties hereto agree as follows:

Section 1. Creation of Escrow Account. (a) There is hereby created an escrow fund to be known as the "City of Escondido Escrow Account" (the *"Escrow Account"*) to be held by the Escrow Agent for the purposes stated herein, for the benefit of Lessor and Lessee, to be held, disbursed and returned in accordance with the terms hereof.

(b) Lessee may, from time to time, provide written instructions for Escrow Agent to use any available cash in the Escrow Account to purchase any money market fund or liquid deposit investment vehicle that Escrow Agent from time to time makes available to the parties hereto. Such written instructions shall be provided via delivery to Escrow Agent of a signed and completed Escrow Account Investment Selection Form (such form available from Escrow Agent upon request). All funds invested by Escrow Agent at the direction of Lessee in such short-term investments (as more particularly described in Escrow Agent's Escrow Account Investment Selection Form) shall be deemed to be part of the Escrow Account and subject to all the terms and conditions of this Agreement. The Escrow Agent is hereby authorized and directed to sell or redeem any such investments as it deems necessary to make any payments or distributions required under this Agreement. The Lessee acknowledges that neither the Escrow Agent nor the Lessor is providing investment supervision, recommendations, or advice. If any cash is received for the Escrow Account after the cut-off time for the designated short-term investment vehicle, the Escrow Agent shall hold such cash uninvested until the next Business Day. *"Business Day"* means a day other than a Saturday, Sunday or legal holiday, on which banking institutions are not closed in Chicago, Illinois, Escondido, California or New York, New York. In the absence of written instructions from Lessee (on Escrow Agent's Escrow Account Investment Selection Form) designating a short-term investment of cash in the Escrow Account, cash in the Escrow Account shall remain uninvested and it shall not be collateralized. Escrow Agent shall have no obligation

to pay interest on cash in respect of any period during which it remains uninvested. Lessee shall be solely responsible for ascertaining that all proposed investments and reinvestments are Qualified Investments and that they comply with federal, state and local laws, regulations and ordinances governing investment of such funds and for providing appropriate notice to the Escrow Agent for the reinvestment of any maturing investment. Accordingly, neither the Escrow Agent nor Lessor shall be responsible for any liability, cost, expense, loss or claim of any kind, directly or indirectly arising out of or related to the investment or reinvestment of all or any portion of the moneys on deposit in the Escrow Account, and Lessee agrees to and does hereby release the Escrow Agent and Lessor from any such liability, cost, expenses, loss or claim. Interest on the Escrow Account shall become part of the Escrow Account, and gains and losses on the investment of the moneys on deposit in the Escrow Account shall be borne by the Lessee. The Escrow Agent shall have no discretion whatsoever with respect to the management, disposition or investment of the Escrow Account. The Escrow Agent shall not be responsible for any market decline in the value of the Escrow Account and has no obligation to notify Lessor and Lessee of any such decline or take any action with respect to the Escrow Account, except upon specific written instructions stated herein. For purposes of this Agreement, "Qualified Investments" means any investments which meet the requirements of California Government Code Sections 53600 *et seq*.

(c) Unless the Escrow Account is earlier terminated in accordance with the provisions of paragraph (d) below, amounts in the Escrow Account shall be disbursed by the Escrow Agent in payment of amounts described in Section 2 hereof upon receipt of written instruction(s) from Lessor, as is more fully described in Section 2 hereof. If the amounts in the Escrow Account and the Lessee's Contribution are insufficient to pay such amounts, Lessee shall provide any balance of the funds needed to complete the acquisition of the Equipment. Any moneys remaining in the Escrow Account on or after the earlier of (i) the expiration of the Acquisition Period or (ii) the date on which Lessee executes a Final Acceptance Certificate shall be applied as provided in Section 4 hereof.

(d) The Escrow Account shall be terminated at the earliest of (i) the final distribution of amounts in the Escrow Account, (ii) the date on which Lessee executes a Final Acceptance Certificate or (iii) written notice given by Lessor of the occurrence of an Event of Default under the Lease or termination of the Lease due to an Event of Non-appropriation. Notwithstanding the foregoing, this Agreement shall not terminate nor shall the Escrow Account be closed until all funds deposited hereunder have been disbursed.

(e) The Escrow Agent may act in reliance upon any writing or instrument or signature which it, in good faith, believes to be genuine and may assume the validity and accuracy of any statement or assertion contained in such a writing or instrument. The Escrow Agent shall not be liable in any manner for the sufficiency or correctness as to form, manner of execution, or validity of any instrument nor as to the identity, authority, or right of any person executing the same; and its duties hereunder shall be limited to the receipt of such moneys, instruments or other documents received by it as the Escrow Agent, and for the disposition of the same in accordance herewith. Notwithstanding and without limiting the generality of the foregoing, concurrent with the execution of this Agreement, Lessee and Lessor, respectively, shall deliver to the Escrow Agent an authorized signers form in the form of Exhibit A-1 (Lessee) and Exhibit A-2 (Lessor) attached hereto. Notwithstanding the foregoing sentence, the Escrow Agent is authorized to comply with

and rely upon any notices, instructions or other communications believed by it to have been sent or given by the parties or by a person or persons authorized by the parties. The Escrow Agent specifically allows for receiving direction by written or electronic transmission from an authorized representative with the following caveat, to the extent permitted by law, Lessee and Lessor agree to indemnify and hold harmless the Escrow Agent against any and all claims, losses, damages, liabilities, judgments, costs and expenses (including reasonable attorneys' fees) (collectively, *"Losses"*) incurred or sustained by the Escrow Agent as a result of or in connection with the Escrow Agent's reliance upon and compliance with instructions or directions given by written or electronic transmission given by each, respectively, *provided, however,* that such Losses have not arisen from the gross negligence or willful misconduct of the Escrow Agent, with regards to the execution of the instructions or directions in question, it being understood that forbearance on the part of the Escrow Agent to verify or confirm that the person giving the instructions or directions, is, in fact, an authorized person shall not be deemed to constitute gross negligence or willful misconduct.

In the event conflicting instructions as to the disposition of all or any portion of the Escrow Account are at any time given by Lessor and Lessee, the Escrow Agent shall abide by the instructions or entitlement orders given by Lessor without consent of the Lessee.

(f) Unless the Escrow Agent is guilty of gross negligence or willful misconduct with regard to its duties hereunder, Lessee agrees to and does hereby release and indemnify the Escrow Agent and its directors, officers, employees and agents and hold it harmless from any and all claims, liabilities, losses, actions, suits or proceedings at law or in equity, or any other expense, fees or charges of any character or nature, which it may incur or with which it may be threatened by reason of its acting as Escrow Agent under this Agreement; and in connection therewith, does to the extent permitted by law indemnify the Escrow Agent against any and all expenses; including reasonable attorneys' fees and the cost of defending any action, suit or proceeding or resisting any claim.

(g) If Lessee and Lessor shall be in disagreement about the interpretation of the Lease, or about the rights and obligations, or the propriety of any action contemplated by the Escrow Agent hereunder, the Escrow Agent may, but shall not be required to, file an appropriate civil action including an interpleader action to resolve the disagreement. The Escrow Agent shall be reimbursed by Lessee for all costs, including reasonable attorneys' fees, in connection with such civil action, and shall be fully protected in suspending all or part of its activities under this Agreement until a final judgment in such action is received.

(h) The Escrow Agent may consult with counsel of its own choice and shall have full and complete authorization and protection with the opinion of such counsel. The Escrow Agent shall otherwise not be liable for any mistakes of fact or errors of judgment, or for any acts or omissions of any kind unless caused by its willful misconduct. The Escrow Agent may act through attorneys or agents and shall not be responsible for the acts or omissions of any such attorney or agent appointed with due care.

(i) The compensation fee for Escrow Agent's services under this Agreement is $0.00. Lessee shall reimburse the Escrow Agent for all reasonable costs and expenses, including those of

the Escrow Agent's attorneys, agents and employees incurred for non-routine administration of the Escrow Account, execution of the directions provided by the Lessee and Lessor and the performance of the Escrow Agent's powers and duties hereunder in connection with any Event of Default under the Lease, any termination of the Lease due to an Event of Non-appropriation or in connection with any dispute between Lessor and Lessee concerning the Escrow Account. The terms of this paragraph shall survive termination of this Agreement and/or the earlier resignation or removal of the Escrow Agent.

(j) The Escrow Agent or any successor may at any time resign by giving mailed notice to Lessee and Lessor of its intention to resign and of the proposed date of resignation (the *"Effective Date"*), which shall be a date not less than 60 days after such notice is delivered to an express carrier, charges prepaid, unless an earlier resignation date and the appointment of a successor shall have been approved by the Lessee and Lessor. After the Effective Date, the Escrow Agent shall be under no further obligation except to hold the Escrow Account in accordance with the terms of this Agreement, pending receipt of written instructions from Lessor regarding further disposition of the Escrow Account.

(k) The Escrow Agent shall have no responsibilities, obligations or duties other than those expressly set forth in this Agreement and no implied duties responsibilities or obligations shall be read into this Agreement. The Escrow Agent shall neither be responsible for, nor chargeable with, knowledge of the terms and conditions of any other agreement, instrument, or document other than this Agreement, whether or not an original or a copy of such agreement has been provided to the Escrow Agent.

(l) The permissive rights of the Escrow Agent to do things enumerated in this Agreement shall not be construed as a duty and, with respect to such permissive rights, the Escrow Agent shall not be answerable for other than its gross negligence or willful misconduct.

(m) Nothing in this Agreement shall require the Escrow Agent to expend or risk its own funds or otherwise incur any financial liability in the performance of any of its duties or in the exercise of any of its rights or powers hereunder.

(n) In no event shall the Escrow Agent be responsible or liable for special, indirect, punitive, incidental or consequential loss or damage of any kind whatsoever (including, but not limited to, loss of profit) irrespective of whether the Escrow Agent has been advised of the likelihood of such loss or damage and regardless of the form of action.

(o) In the event that any of the funds in the Escrow Account shall be attached, garnished or levied upon by any court order, or the delivery thereof shall be stayed or enjoined by an order of a court, or any order, judgment or decree shall be made or entered by any court order affecting the funds in the Escrow Account, the Escrow Agent is hereby expressly authorized to respond as it deems appropriate or to comply with all writs, orders or decrees so entered or issued, or which it is advised by legal counsel of its own choosing is binding upon it, whether with or without jurisdiction. To the extent permitted by law, the Escrow Agent shall inform the Lessor and Lessee in writing about any such attachment, garnishment, levy, court order, judgment or decree within ten (10) business days of its receipt of any such attachment, garnishment, levy, court order,

judgment or decree. In the event that the Escrow Agent obeys or complies with any such writ, order or decree, it shall not be liable to any of the other parties to this Agreement or to any other person, firm or corporation, should, by reason of such compliance notwithstanding, such writ, order or decree be subsequently reversed, modified, annulled, set aside or vacated.

Section 2. Acquisition and Installation of Equipment.

(a) *Acquisition Contracts*. Lessee will arrange for, supervise and provide for, or cause to be supervised and provided for, the acquisition of the Equipment as provided in Section 4.08 of the Lease with moneys available in the Escrow Account, *provided that* the last $10,000,000 of the $18,524,650 needed to pay for WTP & HARRF Excluded Equipment shall not be disbursed from the Escrow Account until Lessee has provided written evidence satisfactory to Lessor that (i) Lessee has paid and distributed at least $10,006,655 (or such other amount approved by the Lessor) towards the cost of the Equipment from the Lessee's Contribution and (ii) all solar photovoltaic systems and renewable energy equipment (other than Financed Renewables) to be installed pursuant to the Climatec Contract have been completely paid for by Lessee, installed, and unconditionally accepted by Lessee. Lessee represents the estimated costs of the Equipment are within the funds estimated to be available therefor, and Lessor makes no warranty or representation with respect thereto. Lessor shall have no liability under any of the acquisition or construction contracts. Lessee shall obtain all necessary permits and approvals, if any, for the acquisition, equipping and installation of the Equipment, and the operation and maintenance thereof. Escrow Agent shall have no duty to inquire as to the performance or nonperformance of any provision of any other agreement, instrument, or document other than this Agreement or monitor or enforce Lessee's compliance with the foregoing covenant.

(b) *Authorized Escrow Account Disbursements*. It is agreed as between Lessee and Lessor that disbursements from the Escrow Account shall be made for the purpose of paying (including the reimbursement to Lessee for advances from its own funds to accomplish the purposes hereinafter described, other than for any amount paid or to be paid by Lessee from the Lessee's Contribution) the cost of acquiring the Equipment, *provided that* the last $10,000,000 of the $18,524,650 needed to pay for WTP & HARRF Excluded Equipment shall not be disbursed from the Escrow Account until Lessee has provided written evidence satisfactory to Lessor that (i) Lessee has paid and distributed at least $10,006,655 (or such other amount approved by the Lessor) towards the cost of the Equipment from the Lessee's Contribution and (ii) all solar photovoltaic systems and renewable energy equipment (other than Financed Renewables) to be installed pursuant to the Climatec Contract have been completely paid for by Lessee, installed, and unconditionally accepted by Lessee.

(c) *Requisition Procedure*. The last $10,000,000 of the $18,524,650 needed to pay for WTP & HARRF Excluded Equipment shall not be disbursed from the Escrow Account unless and until Lessee has satisfied its covenant set forth in Section 4.08 of the Lease to pay the Lessee's Contribution and Lessor has approved in writing such requisition. Lessee shall provide written evidence satisfactory to Lessor that (i) Lessee has paid and distributed at least $10,006,655 (or such other amount approved by the Lessor) towards the cost of the Equipment from the Lessee's Contribution and (ii) all solar photovoltaic systems and renewable energy equipment (other than Financed Renewables) to be installed pursuant to the Climatec Contract have been completely paid

for by Lessee, installed, and unconditionally accepted by Lessee, before the last $10,000,000 of the $18,524,650 needed to pay for WTP & HARRF Excluded Equipment may be disbursed from the Escrow Account. Prior to disbursement from the Escrow Account there shall be filed with the Escrow Agent a requisition for such payment in the form of Disbursement Request attached hereto as Schedule 1, stating each amount to be paid and the name of the person, firm or corporation to whom payment thereof is due. All disbursements shall be made by wire transfer. The Escrow Agent is authorized to obtain and rely on confirmation of such Disbursement Request and payment instructions by telephone call-back to the person or persons designated for verifying such requests on Exhibit A-2 (such person verifying the request shall be different than the person initiating the request). The Lessor and Lessee hereby confirm that any call-back performed by Escrow Agent to verify a disbursement instruction pursuant to a Disbursement Request submitted pursuant to this Section 2(c) before release, shall be made to Lessor only and Escrow Agent shall have no obligation to call-back Lessee.

Each such Disbursement Request shall be signed by an authorized representative of Lessee (an *"Authorized Representative"*) and by Lessor, and shall be subject to the following conditions, which Escrow Agent shall conclusively presume have been satisfied at such time as a requisition executed by Lessee and Lessor is delivered to it:

1. Delivery to Lessor of an executed Disbursement Request in the form attached hereto as Schedule 1;

2. Delivery to Lessor of copies of invoices (and proofs of payment of such invoices, if Lessee seeks reimbursement) and bills of sale therefor or other evidence of title transfer, and release by Vendor of any security interest, therefor as required by Section 3.04 of the Lease and any additional documentation reasonably requested by Lessor; and

3. The disbursement shall occur during the Acquisition Period.

Lessee and Lessor agree that their execution of the form attached hereto as Schedule 1 and delivery of the executed form to Escrow Agent confirms that all of the requirements and conditions with respect to disbursements set forth in this Section 2 have been satisfied.

Section 3. Deposit to Escrow Account. Upon satisfaction of the conditions specified in Section 3.04 of the Lease, Lessor will cause the Acquisition Amount to be deposited in the Escrow Account. Lessee agrees to pay any costs with respect to the Equipment in excess of amounts available therefor in the Escrow Account and the Lessee's Contribution. The Escrow Agent shall not be liable for any amount in excess of the Acquisition Amount.

Section 4. Excess Proceeds in Escrow Account. Upon receipt of written instructions from Lessor including a representation that one of the following conditions has been satisfied (upon which representation Escrow Agent shall conclusively rely), any funds remaining in the Escrow Account on or after the earlier of (a) the expiration of the Acquisition Period or (b) the date on which Lessee executes a Final Acceptance Certificate, or upon a termination of the Escrow Account as provided in this Agreement, shall be distributed by the Escrow Agent to the Lessor in

order for the Lessor to apply such funds to amounts owed by Lessee under the Lease in accordance with Section 4.07 of the Lease.

Section 5. Security Interest. The Escrow Agent and Lessee acknowledge and agree that the Escrow Account and all proceeds thereof are being held by Escrow Agent for disbursement or return as set forth herein. Lessee hereby grants to Lessor a first priority perfected security interest in the Escrow Account, and all proceeds thereof, and all investments made with any amounts in the Escrow Account. If the Escrow Account, or any part thereof, is converted to investments as set forth in this Agreement, such investments shall be made in the name of Escrow Agent and the Escrow Agent hereby agrees to hold such investments as bailee for Lessor so that Lessor is deemed to have possession of such investments for the purpose of perfecting its security interest.

Section 6. Control of Escrow Account. In order to perfect Lessor's security interest by means of control in (i) the Escrow Account established hereunder, (ii) all securities entitlements, investment property and other financial assets now or hereafter credited to the Escrow Account, (iii) all of Lessee's rights in respect of the Escrow Account, such securities entitlements, investment property and other financial assets, and (iv) all products, proceeds and revenues of and from any of the foregoing personal property (collectively, the *"Collateral"*), Lessor, Lessee and Escrow Agent further agree as follows:

(a) All terms used in this Section 6 which are defined in the California Commercial Code (the *"Commercial Code"*) but are not otherwise defined herein shall have the meanings assigned to such terms in the Commercial Code, as in effect on the date of this Agreement.

(b) Escrow Agent will comply with all entitlement orders originated by Lessor with respect to the Collateral, or any portion of the Collateral, without further consent by Lessee.

(c) *Provided* that account investments shall be held in the name of the Escrow Agent, Escrow Agent hereby represents and warrants (i) that the records of Escrow Agent show that Lessee is the sole owner of the Collateral, (ii) that Escrow Agent has not been served with any notice of levy or received any notice of any security interest in or other claim to the Collateral, or any portion of the Collateral, other than Lessor's claim pursuant to this Agreement, and (iii) that Escrow Agent is not presently obligated to accept any entitlement order from any person with respect to the Collateral, except for entitlement orders that Escrow Agent is obligated to accept from Lessor under this Agreement and entitlement orders that Escrow Agent, subject to the provisions of paragraph (e) below, is obligated to accept from Lessee.

(d) Without the prior written consent of Lessor, Escrow Agent will not enter into any agreement by which Escrow Agent agrees to comply with any entitlement order of any person other than Lessor or, subject to the provisions of paragraph (e) below, Lessee, with respect to any portion or all of the Collateral. Escrow Agent shall promptly notify Lessor if any person requests Escrow Agent to enter into any such agreement or otherwise

asserts or seeks to assert a Lien, encumbrance or adverse claim against any portion or all of the Collateral.

(e) Except as otherwise provided in this paragraph (e) and subject to Section 1(b) hereof, Lessee may effect sales, trades, transfers and exchanges of Collateral within the Escrow Account, but will not, without the prior written consent of Lessor, withdraw any Collateral from the Escrow Account. Escrow Agent acknowledges that Lessor reserves the right, by delivery of written notice to Escrow Agent, to prohibit Lessee from effecting any withdrawals (including withdrawals of ordinary cash dividends and interest income), sales, trades, transfers or exchanges of any Collateral held in the Escrow Account. Further, Escrow Agent hereby agrees to comply with any and all written instructions delivered by Lessor to Escrow Agent (once it has had a reasonable opportunity to comply therewith) and has no obligation to, and will not, investigate the reason for any action taken by Lessor, the amount of any obligations of Lessee to Lessor, the validity of any of Lessor's claims against or agreements with Lessee, the existence of any defaults under such agreements, or any other matter.

(f) Lessee hereby irrevocably authorizes Escrow Agent to comply with all instructions and entitlement orders delivered by Lessor to Escrow Agent.

(g) Escrow Agent will not attempt to assert control, and does not claim and will not accept any security or other interest in, any part of the Collateral, and Escrow Agent will not exercise, enforce or attempt to enforce any right of setoff against the Collateral, or otherwise charge or deduct from the Collateral any amount whatsoever.

(h) Escrow Agent and Lessee hereby agree that any property held in the Escrow Account shall be treated as a financial asset under such section of the Commercial Code as corresponds with Section 8-102 of the Uniform Commercial Code, notwithstanding any contrary provision of any other agreement to which Escrow Agent may be a party.

(i) Escrow Agent is hereby authorized and instructed, and hereby agrees, to send to Lessor at its address set forth in Section 8 below, concurrently with the sending thereof to Lessee, duplicate copies of any and all monthly Escrow Account statements or reports issued or sent to Lessee with respect to the Escrow Account.

Section 7. Information Required Under USA PATRIOT ACT. The parties acknowledge that in order to help the United States government fight the funding of terrorism and money laundering activities, pursuant to Federal regulations that became effective on October 1, 2003 (Section 326 of the USA PATRIOT ACT) all financial institutions are required to obtain, verify, record and update information that identifies each person establishing a relationship or opening an account. The parties to this Agreement agree that they will provide to the Escrow Agent such information as it may request, from time to time, in order for the Escrow Agent to satisfy the requirements of the USA PATRIOT ACT, including but not limited to the name, address, tax identification number and other information that will allow it to identify the individual or entity who is establishing the relationship or opening the account and may also ask for formation documents such as articles of incorporation or other identifying documents to be provided.

Section 8. Miscellaneous. Capitalized terms not otherwise defined herein shall have the meanings assigned to them in the Lease. This Agreement may not be amended except in writing signed by all parties hereto. This Agreement may be executed in one or more counterparts, each of which shall be deemed to be an original instrument and each shall have the force and effect of an original and all of which together constitute, and shall be deemed to constitute, one and the same instrument. Notices hereunder shall be made in writing and shall be deemed to have been duly given when personally delivered or when deposited in the mail, first class postage prepaid, or delivered to an express carrier, charges prepaid, or sent by facsimile with electronic confirmation, addressed to each party at its address below.

Notices and other communications hereunder may be delivered or furnished by electronic mail *provided* that any formal notice shall be attached to an email message in PDF format and *provided further* that any notice or other communication sent to an e-mail address shall be deemed received upon and only upon the sender's receipt of affirmative acknowledgement or receipt from the intended recipient. For purposes hereof no acknowledgement of receipt generated on an automated basis shall be deemed sufficient for any purpose hereunder or admissible as evidence of receipt.

If a court of competent jurisdiction declares any provision hereof invalid, it will be ineffective only to the extent of such invalidity, so that the remainder of the provision and Agreement will continue in full force and effect.

This Agreement and the exhibits hereto set forth the entire agreement and understanding of the parties related to this transaction and supersede all prior agreements and understandings, oral or written.

If to Lessor: Banc of America Public Capital Corp
11333 McCormick Road
Mail Code: MD5-032-07-05
Hunt Valley, MD 21031
Attn: Contract Administration

If to Lessee: City of Escondido
Escondido City Hall
201 North Broadway
Escondido, CA 92025
Attention: Director of Finance
Telephone: (760) 839-4880
Fax No.: _____
Email: Christina.Holmes@escondido.gov

If to Escrow Agent: UMB Bank, National Association
3070 Bristol Street, Suite 300
Costa Mesa, CA 92526
Attention: Chris Johnson, Vice President
Telephone: (949) 807-1033
E-mail: chris.johnson@umb.com

Section 9. Lessee and Lessor understand and agree that they are required to provide the Escrow Agent with a properly completed and signed Tax Certification (as defined below) and that the Escrow Agent may not perform its duties hereunder without having been provided with such Tax Certification. As used herein "Tax Certification" shall mean an IRS form W-9 or W-8 as described above. The Escrow Agent will comply with any U.S. tax withholding or backup withholding and reporting requirements that are required by law. With respect to earnings allocable to a foreign person, the Escrow Agent will withhold U.S. tax as required by law and report such earnings and taxes withheld, if any, for the benefit of such foreign person on IRS Form 1042-S (or any other required form), unless such earnings and withheld taxes are exempt from reporting under Treasury Regulation Section 1.1461-1(c)(2)(ii) or under other applicable law. With respect to earnings allocable to a United States person, the Escrow Agent will report such income, if required, on IRS Form 1099 or any other form required by law. The IRS Forms 1099 and/or 1042-S shall show the Escrow Agent as payor and Lessee as payee. Escrow Agent shall recognize Lessee as the designated party for regulatory reporting purposes.

Lessee and Lessor agree that they are not relieved of their respective obligations, if any, to prepare and file information reports under Code Section 6041, and the Treasury regulations thereunder, with respect to amounts of imputed interest income, as determined pursuant to Code Sections 483 or 1272. The Escrow Agent shall not be responsible for determining or reporting such imputed interest.

Section 10. This Agreement shall be governed by and construed in accordance with the laws of the State of California and the parties hereto consent to jurisdiction in the State of California and venue in any state or Federal court located in the State of California, and each party expressly waives any objections that it may have to the venue of such courts. THE PARTIES HERETO EXPRESSLY WAIVE ANY RIGHT TO TRIAL BY JURY IN ANY ACTION BROUGHT ON OR WITH RESPECT TO THIS AGREEMENT. If the waiver of jury trial contained herein is unenforceable for any reason, then the parties hereto agree that the court shall, and is hereby directed to, make a general reference pursuant to California Code of Civil Procedure Section 638 to a referee to hear and determine all of the issues in such action or proceeding (whether of fact or of law) and to report a statement of decision.

Section 11. Any bank or corporation into which the Escrow Agent may be merged or with which it may be consolidated, or any bank or corporation to whom the Escrow Agent may transfer a substantial amount of its escrow business, shall be the successor to the Escrow Agent without the execution or filing of any paper or any further act on the part of any of the parties, anything herein to the contrary notwithstanding. Any bank or corporation into which the Lessor may be

merged or with which it may be consolidated, or any bank or corporation to whom the Lessor may transfer a substantial amount of its business, shall be the successor to the Lessor without the execution or filing of any paper or any further act on the part of any of the parties, anything herein to the contrary notwithstanding.

Section 12. This Agreement may be amended, modified, and/or supplemented only by an instrument in writing executed by all parties hereto.

Section 13. No party hereto shall assign its rights hereunder until its assignee has submitted to the Escrow Agent (i) PATRIOT ACT disclosure materials and the Escrow Agent has determined that on the basis of such materials it may accept such assignee as a customer and (ii) assignee has delivered an IRS Form W-8 or W-9, as appropriate, to the Escrow Agent which the Escrow Agent has determined to have been properly signed and completed.

Section 14. Escrow Agent will treat information related to this Agreement as confidential but, unless prohibited by law, Lessee and Lessor authorize the transfer or disclosure of any information relating to the Agreement to and between the subsidiaries, officers, affiliates and other representatives and advisors of Escrow Agent and third parties selected by any of them, wherever situated, for confidential use in the ordinary course of business, and further acknowledge that Escrow Agent and any such subsidiary, officer, affiliate or third party may transfer or disclose any such information as required by any law, court, regulator or legal process.

Lessor will treat information related to this Agreement as confidential but, unless prohibited by law, Escrow Agent and Lessee authorize the transfer or disclosure of any information relating to the Agreement to and between the subsidiaries, officers, affiliates, other representatives and advisors of Lessor and debt and equity sources and third parties selected by any of them, and to their prospective assignees wherever situated, for confidential use in the ordinary course of business, and further acknowledge that Lessor and any such subsidiary, officer, affiliate, debt and equity source or third party or prospective assignee may transfer or disclose any such information as required by any law, court, regulator or legal process. For the avoidance of doubt, nothing herein prohibits any individual from communicating or disclosing information regarding suspected violations of laws, rules, or regulations to a governmental, regulatory, or self-regulatory authority without any notification to any person.

Lessee will treat the terms of this Agreement as confidential except on a "need to know" basis to persons within or outside Lessee's organization (including affiliates of such party), such as attorneys, accountants, bankers, financial advisors, auditors and other consultants of such party and its affiliates, except as required by any law, court, regulator or legal process and except pursuant to the express prior written consent of the other parties, which consent shall not be unreasonably withheld.

Section 15. This Agreement may be executed and delivered by facsimile signature or other electronic or digital means (including, without limitation, Adobe's Portable Document Format (*"PDF"*)). Any such signature shall be of the same force and effect as an original signature, it being the express intent of the parties to create a valid and legally enforceable contract between them. The exchange and delivery of this Agreement and the related signature pages via

facsimile or as an attachment to electronic mail (including in PDF) shall constitute effective execution and delivery by the parties and may be used by the parties for all purposes. Notwithstanding the foregoing, at the request of either party, the parties hereto agree to exchange inked original replacement signature pages as soon thereafter as reasonably practicable.

[SIGNATURE PAGES TO FOLLOW]

IN WITNESS WHEREOF, the parties have executed this Escrow and Account Control Agreement as of the date first above written.

BANC OF AMERICA PUBLIC CAPITAL CORP, as Lessor

By: _____
Name: _____
Title: _____

CITY OF ESCONDIDO, as Lessee

By: _____
Name: _____
Title: _____

UMB BANK, NATIONAL ASSOCIATION, as Escrow Agent

By: _____
Name: _____
Title: _____

SCHEDULE 1
TO THE ESCROW AND ACCOUNT CONTROL AGREEMENT

FORM OF DISBURSEMENT REQUEST

Re: Equipment Lease/Purchase Agreement dated as of August 28, 2025 by and between Banc of America Public Capital Corp, as Lessor, and the City of Escondido, as Lessee (the *"Lease"*) (Capitalized terms not otherwise defined herein shall have the meanings assigned to them in the Lease.)

In accordance with the terms of the Escrow and Account Control Agreement, dated as of August 28, 2025 (the *"Escrow and Account Control Agreement"*) by and among Banc of America Public Capital Corp (*"Lessor"*), the City of Escondido (*"Lessee"*) and UMB Bank, National Association (the *"Escrow Agent"*), the undersigned hereby requests the Escrow Agent pay the following persons the following amounts from the Escrow Account created under the Escrow and Account Control Agreement for the following purposes:

DISBURSEMENT AMOUNTS:

Payee's Name and Address (if disbursement via wire, must include wire transfer instructions)	INVOICE NUMBER	DOLLAR AMOUNT	PURPOSE
<Payee's Name> <Payee Address 1> <Payee Address 2> <Payee Address 3> <Payee Bank Name*> <Payee Bank ABA/Routing*> <Payee Bank Account No*> <Payee Account Name*> <*Payee Address and Payee Bank information is required.>	<invoice list OR "see attached" with a spreadsheet>	< invoice amount>	<general description of equipment; ex "police cruiser">

<Payee's Name> <Payee Address 1> <Payee Address 2> <Payee Address 3> <Payee Bank Name*> <Payee Bank ABA/Routing*> <Payee Bank Account No*> <Payee Account Name*> <*Payee Address information is required. Payee Bank information only to be included for wire/EFT>	<invoice list OR "see attached" with a spreadsheet>	< invoice amount>	[<mobilization fee that is payable to the Vendor under the Vendor Agreement>]
<Payee's Name> <Payee Address 1> <Payee Address 2> <Payee Address 3> <Payee Bank Name*> <Payee Bank ABA/Routing*> <Payee Bank Account No*> <Payee Account Name*> <*Payee Address and Payee Bank information is required..>	<invoice list OR "see attached" with a spreadsheet>	< invoice amount>	<general description of equipment; ex "police cruiser">

Lessee hereby represents, covenants and warrants for the benefit of Lessor on the date hereof as follows:

(i) Each obligation specified in the table herein titled as "Disbursement Amounts" (a) has been incurred by Lessee in the stated amount, (b) the same is a proper charge against the Escrow Account for Equipment Costs relating to the Equipment identified above and has not been paid (or has been paid by Lessee and Lessee requests reimbursement thereof, in which event Lessee further certifies that the requested reimbursement is not with respect to any amount previously paid from the Lessee's Contribution), and (c) has not been paid (or has been paid by Lessee and Lessee requests reimbursement thereof), and the Equipment relating to such obligation has been delivered, installed and accepted by Lessee. **[For COI Disbursement only: Each obligation specified in the table herein titled as "Disbursement Amounts" (a) has been incurred by Lessee in the stated amount, and (b) the same is a proper charge against the Delivery Costs Subaccount for costs of delivery of the Lease identified above and has not been paid (or has been paid by Lessee and Lessee requests reimbursement thereof, in which event Lessee further certifies that the requested reimbursement is not with respect to any amount previously paid from the Lessee's Contribution).]**

(ii) For each item of Equipment relating to an obligation specified in the table herein titled as "Disbursement Amounts" (a) Lessee has conducted such inspection and testing of the Equipment as it deems appropriate in order to unconditionally accept such Equipment, (b) such Equipment has been delivered, installed, and unconditionally accepted for all purposes by Lessee and title thereto has transferred to Lessee and any security interest of Vendor therein has been released and (c) the date on which Equipment acceptance occurred is _____, 20__. Attached hereto is a copy of the original invoice, and certification from Vendor as to title transfer and release by Vendor of any security interest with respect to such obligation and the related AIA forms.

(iii) The undersigned, as Authorized Representative, has no notice of any vendor's, mechanic's or other Liens or rights to Liens, chattel mortgages, conditional sales contracts or security interest which should be satisfied or discharged before such payment is made.

(iv) This requisition contains no item representing payment on account, or any retained percentages which Lessee is, at the date hereof, entitled to retain (except to the extent such amounts represent a reimbursement to Lessee).

(v) The Equipment is insured in accordance with the Lease.

(vi) No Event of Default, and no event which with notice or lapse of time, or both, would become an Event of Default, under the Lease has occurred and is continuing at the date hereof. No Event of Non-appropriation has occurred or is threatened with respect to the Lease.

(vii) The disbursement shall occur during the Acquisition Period.

(viii) The representations, warranties and covenants of Lessee set forth in the Lease are true and correct as of the date hereof.

(ix) No Material Adverse Change has occurred since the date of the execution and delivery of the Lease.

(x) The information in this Disbursement Request regarding each Payee, including their respective name, address and wiring instructions (collectively, the *"Payee Information"*), is true and correct, such Payee Information has been verified and confirmed by Lessee and the Lessor can rely on Lessee's verification and confirmation of the accuracy of such Payee Information. Lessee hereby acknowledges and agrees that any call-back performed by Lessor to verify the disbursement instructions pursuant to this Disbursement Request shall be made to Lessee only and Lessor shall have no obligation to call-back any Payee listed above.

(xi) **[Following the disbursement of all obligations specified in the table herein titled as "Disbursement Amounts", no more than $8,524,650 to date collectively has been disbursed to pay for WTP & HARRF Excluded Equipment and**

at least $10,000,000 of the $18,524,650 needed to pay for WTP & HARRF Excluded Equipment shall still remain in the Escrow Account.]

"WTP & HARRF Excluded Equipment" **means the following equipment installed and acquired pursuant to the Climatec Contract with the proceeds of the Lease and located at the following locations:**

Location	Equipment
Water Treatment Plant (WTP) **3440 E. Valley Parkway** **Escondido, CA 92027**	**Building Automation System (BAS)** **Lighting** **WTP & System**
Hale Avenue Resource & Recovery Facility (HARRF) **1521 S. Hale Avenue** **Escondido, CA 92029**	**High Efficiency Transformer** **High Efficiency Blowers** **WWTP & System**

OR

[Lessee has previously paid and disbursed the full amount of the Lessee's Contribution equal to $10,006,655 in accordance with Section 4.08 of the Lease and Lessee has provided written evidence satisfactory to Lessor that (i) Lessee has paid and distributed at least $10,006,655 (or such other amount approved by the Lessor) towards the cost of the Equipment from the Lessee's Contribution and (ii) all solar photovoltaic systems and renewable energy equipment (other than Financed Renewables) to be installed pursuant to the Climatec Contract have been completely paid for by Lessee, installed, and unconditionally accepted by Lessee.]

"Financed Renewables" **means the following equipment installed and acquired pursuant to the Climatec Contract with the proceeds of the Lease and located at the following locations:**

Location	Equipment
Library **239 S. Kalmia Street** **Escondido, CA 92025**	**Renewables**
James Stone Pool **115 Woodward Avenue** **Escondido, CA 92025**	**Renewables**

Dated: _____

CITY OF ESCONDIDO

By:_____
Name: _____
Title: _____

Disbursement of funds from the Escrow Account in accordance with the foregoing Disbursement Request hereby is authorized

BANC OF AMERICA PUBLIC CAPITAL CORP
as Lessor under the Lease

By:_____
Name:_____
Title:_____

[AN "EXHIBIT A-1" MUST BE COMPLETED AND EXECUTED AT TIME OF EXECUTION OF THE AGREEMENT]

EXHIBIT A-1

FORM OF INCUMBENCY AND AUTHORIZATION CERTIFICATE

The undersigned, a duly elected or appointed and acting City Clerk of the City of Escondido (*"Lessee"*) certifies as follows:

A. The following listed persons are duly elected or appointed and acting officials of Lessee (the *"Officials"*) in the capacity set forth opposite their respective names below and the facsimile signatures below are true and correct as of the date hereof;

B. The Officials are duly authorized, on behalf of Lessee, to negotiate, execute, in writing or electronically, and deliver the Equipment Lease/Purchase Agreement dated as of August 28, 2025 by and between Lessee and Banc of America Public Capital Corp (*"Lessor"*), the Escrow and Account Control Agreement dated as of August 28, 2025 by and among Lessor, Lessee and UMB Bank, National Association, as Escrow Agent, all documents related thereto and delivered in connection therewith, and any future modification(s) or amendments thereof (collectively, the *"Operative Agreements"*), and the Operative Agreements each are the binding and authorized agreements of Lessee, enforceable in all respects in accordance with their respective terms.

NAME OF OFFICIAL	TITLE	SIGNATURE
_____	_____	_____
_____	_____	_____
_____	_____	_____

Dated: August 28, 2025

By:_____
Name: _____
Title: _____

(The signer of this Certificate cannot be listed above as authorized to execute the Operative Agreements.)

[AN "EXHIBIT A-2" MUST BE COMPLETED AND EXECUTED AT TIME OF EXECUTION OF THE AGREEMENT]

EXHIBIT A-2

ESCROW AND ACCOUNT CONTROL AGREEMENT DATED AS OF AUGUST 28, 2025 BY AND AMONG BANC OF AMERICA PUBLIC CAPITAL CORP, AS LESSOR, THE CITY OF ESCONDIDO, AS LESSEE AND UMB BANK, NATIONAL ASSOCIATION, AS ESCROW AGENT

CERTIFICATE OF AUTHORIZED REPRESENTATIVES – [LESSOR]

Name:	Candy Tam	**Name:**	Nancy Nusenko
Title:	Authorized Agent	**Title:**	Authorized Agent
Phone:	415-765-7492	**Phone:**	443-541-3646
Facsimile:	415-633-0183	**Facsimile:**	
E-mail:	Candy.tam@bofa.com	**E-mail:**	Nancy.a.nusenko@bofa.com
Signature:		**Signature:**	

Fund Transfer / Disbursement Authority Level:
☐ Initiate
☐ Verify transactions initiated by others

Fund Transfer / Disbursement Authority Level:
☐ Initiate
☐ Verify transactions initiated by others

Name:	Nancy K. Hepner	**Name:**	Arlene Sobieck
Title:	Authorized Agent	**Title:**	Authorized Agent
Phone:	443-541-3645	**Phone:**	443-541-3643
Facsimile:	804-553-2407	**Facsimile:**	
E-mail:	Nancy.k.hepner@bofa.com	**E-mail:**	Arlene.sobieck@bofa.com
Signature:		**Signature:**	

Fund Transfer / Disbursement Authority Level:
☐ Initiate
☐ Verify transactions initiated by others

Fund Transfer / Disbursement Authority Level:
☐ Initiate
☐ Verify transactions initiated by others

The Escrow Agent is authorized to comply with and rely upon any notices, instructions or other communications believed by it to have been sent or given by the person or persons identified above including without limitation, to initiate and verify funds transfers as indicated.

BANC OF AMERICA PUBLIC CAPITAL CORP

By:_____
Name:_____
Title:_____

Date: August 28, 2025

Attachment "3"

EQUIPMENT LEASE/PURCHASE AGREEMENT
(ESCROW ACCOUNT)

This Equipment Lease/Purchase Agreement (this *"Agreement"*) dated as of August 28, 2025, and entered into by and between Banc of America Public Capital Corp, a Kansas corporation (together with its successors, assigns and transferees, and as more particularly defined herein, *"Lessor"*), and City of Escondido, a city existing under the laws of the State of California (*"Lessee"*).

WITNESSETH:

WHEREAS, Lessee desires to lease and acquire from Lessor certain Equipment (as such term is defined herein), subject to the terms and conditions hereof; and,

WHEREAS, Lessee is authorized under the constitution and laws of the State (as such term is defined herein) to enter into this Agreement for the purposes set forth herein;

NOW, THEREFORE, for good and valuable consideration, receipt and sufficiency of which are hereby acknowledged, and in consideration of the premises hereinafter contained, the parties hereby agree as follows:

ARTICLE I

Section 1.01. Definitions. The following terms will have the meanings indicated below unless the context clearly requires otherwise:

"Acquisition Amount" means $46,000,000.00. The Acquisition Amount is the amount represented by Lessee to be sufficient, together with the Lessee's Contribution and other funds of Lessee (if any) that are legally available for the purpose of acquiring and installing the Equipment.

"Acquisition Period" means the period ending five (5) business days prior to February 28, 2027.

"Agreement" means this Equipment Lease/Purchase Agreement, including the exhibits hereto, together with any amendments and modifications to this Agreement pursuant to Section 13.04.

"Casualty Value" means the amount that is shown for each Rental Payment Date under the column titled "Casualty Value" on the Payment Schedule.

"Climatec Contract" means [**Energy Services Agreement dated as of _____, 20__ between Lessee and Climatec, LLC (*"Climatec"*), as supplemented and amended**].

"Code" means the Internal Revenue Code of 1986, as amended. Each reference to a Section of the Code herein shall be deemed to include the relevant United States Treasury Regulations proposed or in effect thereunder.

"Collateral" has the meaning set forth in Section 6.02.

"Commencement Date" means the date when Lessee's obligation to pay rent commences hereunder, which shall be the date on which the Acquisition Amount is deposited with the Escrow Agent.

"Contract Rate" means the rate identified as such in the Payment Schedule.

"Disbursement Request" means the disbursement request attached to the Escrow Agreement as Schedule 1 and made a part thereof.

"Equipment" means the equipment, fixtures and other goods and property listed in the Equipment Schedule together with all replacements, repairs, restorations, modifications and improvements thereof or thereto and all accessories, equipment, parts and appurtenances appertaining or attached to any of the Equipment, and all substitutions, renewals, or replacements of and additions, improvements, accessions and accumulations to any and all of such Equipment, together with all the rents, issues, income, profits, proceeds and avails therefrom made pursuant to Article V or Section 8.01; *provided however,* Equipment excludes Excluded Equipment. Whenever reference is made in this Agreement to Equipment, such reference shall be deemed to include all such replacements, repairs, restorations, modifications and improvements thereof or thereto and all accessories, equipment, parts and appurtenances appertaining or attached to any of the Equipment, and all substitutions, renewals, or replacements of and additions, improvements, accessions and accumulations to any and all of such Equipment, together with all the rents, issues, income, profits, proceeds and avails therefrom.

"Equipment Costs" means the total cost of the Equipment, including related soft costs such as freight, installation and taxes and other capitalizable costs, and other costs incurred in connection with the acquisition, installation and/or financing of the Equipment.

"Equipment Schedule" means the Equipment Schedule attached hereto as *Exhibit A* and made a part hereof (including any duly authorized and executed amendments thereto).

"Escrow Account" means the account established and held by the Escrow Agent pursuant to the Escrow Agreement.

"Escrow Agent" means the Escrow Agent identified in the Escrow Agreement, and its successors and assigns.

"Escrow Agreement" means the Escrow and Account Control Agreement in form and substance acceptable to and executed by Lessee, Lessor and the Escrow Agent, pursuant to which the Escrow Account is established and administered.

"Event of Default" means an Event of Default described in Section 12.01.

"Event of Non-appropriation" means the failure of Lessee's governing body to appropriate or otherwise make available funds to pay Rental Payments under this Agreement following the Original Term or then current Renewal Term sufficient for the continued performance of this Agreement by Lessee.

"Excluded Equipment" means the following equipment installed and acquired pursuant to the Climatec Contract with the proceeds of this Agreement and located at the following locations:

Location	Equipment
Water Treatment Plant (WTP) 3440 E. Valley Parkway Escondido, CA 92027	Building Automation System (BAS) High Efficiency Transformers WTP & System
Daley Ranch Maintenance Facility & Historic House 3024 La Honda Drive Escondido, CA 92027	Building Automation System (BAS) Lighting
Don E. Anderson Building 120 Woodward Ave. Escondido, CA 92025	HVAC Building Automation System (BAS) Building Envelope
Fire Station No. 4 3301 Bear Valley Parkway Escondido, CA 92025	Lighting
Lake Wohlford Boat House 25453 Lake Wohlford Road Escondido, CA 92025	Lighting
Oak Hill Activity Center 405 S. Midway Drive Escondido, CA 92027	HVAC Building Automation System (BAS) Lighting
Ranger Station - Dixon Lake 1700 La Honda Drive Escondido, CA 92027	Building Automation System (BAS) Lighting
Ranger Station - Lake Wohlford 25130 Lake Wohlford Road Escondido, CA 92027	HVAC Building Automation System (BAS)
Real Property 210-240 S. Broadway	HVAC Building Automation System (BAS)

Escondido, CA 92025	
Recycling Offices 901 W Washington Avenue Escondido, CA 92025	HVAC High Efficiency Transformers Building Automation System (BAS) Lighting
Grape Day Park 321 N. Broadway Escondido, CA 92025	HVAC Building Automation System (BAS) Lighting
Rod McLeod Park 1701 S. Iris Lane Escondido, CA 92026	Lighting
Dixon Lake Cottage Rental 1700 La Honda Drive Escondido, CA 92027	HVAC Building Automation System (BAS)
Reidy Creek Golf Course 2300 N. Broadway Escondido, CA 92025	High Efficiency Transformerss
Vineyard Golf Course 925 San Pasqual Road Escondido, CA 92025	HVAC Building Automation System (BAS)
Hale Avenue Resource & Recovery Facility (HARRF) 1521 S. Hale Avenue Escondido, CA 92029	High Efficiency Transformer High Efficiency Blowers WWTP & System

"Financed Renewables" means the following equipment installed and acquired pursuant to the Climatec Contract with the proceeds of this Agreement and located at the following locations:

Location	Equipment
Library 239 S. Kalmia Street Escondido, CA 92025	Renewables
James Stone Pool 115 Woodward Avenue Escondido, CA 92025	Renewables

"Lease Term" means the Original Term and all Renewal Terms.

"Lessee" means the entity referred to as Lessee in the first paragraph of this Agreement.

"Lessee's Contribution" means the amount paid by Lessee in excess of the Acquisition Amount from legally available funds for the purposes provided in Section 4.08 hereof.

"Lessor" means (a) the entity referred to as Lessor in the first paragraph of this Agreement and its successors or (b) any assignee or transferee of any right, title or interest of Lessor in and to this Agreement pursuant to Section 11.01 hereof, including the right, title and interest of Lessor in and to the Equipment, the Rental Payments and other amounts due hereunder, the Escrow Agreement and Escrow Account and other Collateral, but does not include any entity solely by reason of that entity retaining or assuming any obligation of Lessor to perform hereunder.

"Lien" means any lien (statutory or otherwise), security interest, mortgage, deed of trust, pledge, hypothecation, assignment, deposit arrangement, encumbrance, preference, priority or other security or preferential arrangement of any kind or nature whatsoever (including, without limitation, any conditional sale or other title retention agreement, any financing lease having substantially the same economic effect as any of the foregoing and the filing of any financing statement under the Uniform Commercial Code or comparable law of any jurisdiction).

"Material Adverse Change" means (i) a downgrade in Lessee's long-term issuer credit rating after the date of this Agreement to A3 or below by Moody's Investors Service, Inc. (if Moody's Investors Service, Inc. is then rating Lessee) or A- or below by S&P Global Ratings or any equivalent successor credit rating agency, or, if any such rating agency no longer publishes such ratings at the date of determination, any other nationally recognized statistical rating organization that is selected by Lessee for purposes of such long-term general obligation bond ratings and long-term general fund related issuer credit rating or (ii) any change in Lessee's creditworthiness that could reasonably be expected to have a material adverse effect on Lessee's ability to perform its obligations under this Agreement.

"Original Term" means the period from the Commencement Date until the end of the fiscal year of Lessee in effect at such Commencement Date.

"Outstanding Balance" means the amount that is shown for each Rental Payment Date under the column titled "Outstanding Balance" on the Payment Schedule.

"Payment Schedule" means the Payment Schedule attached hereto as *Exhibit B* and made a part hereof.

"Permitted Encumbrances" means, as of any time, with respect to the real estate in, on or to which any Equipment is or will be located: (a) this Agreement and Lessor's security interest in the Collateral; and (b) any Permitted Future Encumbrance.

"Permitted Future Encumbrance" means a mortgage, lien or other encumbrance or sale/leaseback or lease/leaseback arrangement that is recorded against or encumbers all or any

portion of the Real Property (each a *"Proposed Encumbrance"*), in each case, only if all conditions precedents set forth in Section 6.03(b) hereof are satisfied with respect to such Proposed Encumbrance.

"Permitted Future Encumbrance Real Property" means the portion(s) of the Real Property relating to, that is the subject of, or encumbered by a Permitted Future Encumbrance.

"Prepayment Price" means the amount that is shown for each Rental Payment Date under the column titled "Prepayment Price" on the Payment Schedule.

"Principal Portion" means the amount that is shown for each Rental Payment Date under the column titled "Principal Portion" on the Payment Schedule.

"Project Grant" means a grant, subsidy, or other incentive that the Lessee receives for the Equipment.

"Related Documents" means this Agreement and the Escrow Agreement, each as may be amended and supplemented.

"Renewal Terms" means the consecutive renewal terms of this Agreement, the first of which commences immediately after the end of the Original Term and each having a duration and a term coextensive with each successive fiscal year of Lessee; *provided* that the final such Renewal Term shall commence on the first day of the last such fiscal year and end on the first business day after the last scheduled Rental Payment Date.

"Rental Payment Date" means each date on which Lessee is required to make a Rental Payment under this Agreement as specified in the Payment Schedule.

"Rental Payments" means the basic rental payments payable by Lessee on the Rental Payment Dates and in the amounts as specified in the Payment Schedule, consisting of a principal component and an interest component, and in all cases sufficient to repay such principal component and interest thereon at the applicable Contract Rate (or Taxable Rate if then in effect).

"Scheduled Term" means the Original Term and all scheduled Renewal Terms, with a final Renewal Term ending on September 1, 2045, as set forth in *Exhibit B* attached hereto.

"SEC" means the U.S. Securities and Exchange Commission.

"Special Counsel" means Stradling, Yocca, Carlson & Rauth LLP.

"State" means the State of California.

"Taxable Rate" means, for each day that the interest component of Rental Payments is taxable for Federal income tax purposes, an interest rate equal to the Contract Rate plus a rate sufficient such that the total interest to be paid on any Rental Payment Date would, after such interest was reduced by the amount of any Federal, state or local income tax (including any interest,

penalties or additions to tax) actually imposed thereon, equal the amount of interest otherwise due to Lessor.

"Vendor" means the manufacturer, installer or supplier of the Equipment or any other person as well as the agents or dealers of the manufacturer, installer or supplier with whom Lessee arranged Lessee's acquisition, installation, maintenance and/or servicing of the Equipment, and includes, without limitation, Climatec.

"Vendor Agreement" means any contract entered into by Lessee and any Vendor for the acquisition, installation, maintenance and/or servicing of the Equipment, and includes, without limitation, the Climatec Contract.

"WTP & HARRF Excluded Equipment" means the following equipment installed and acquired pursuant to the Climatec Contract with the proceeds of this Agreement and located at the following locations:

Location	Equipment
Water Treatment Plant (WTP) 3440 E. Valley Parkway Escondido, CA 92027	Building Automation System (BAS) High Efficiency Transformers WTP & System
Hale Avenue Resource & Recovery Facility (HARRF) 1521 S. Hale Avenue Escondido, CA 92029	High Efficiency Transformers High Efficiency Blowers WWTP & System

ARTICLE II

Section 2.01. Representations and Covenants of Lessee. Lessee represents, covenants and warrants for the benefit of Lessor on the date hereof as follows:

(a) Lessee is a political subdivision of the State within the meaning of Section 103(c) of the Code, duly organized and existing under the constitution and laws of the State, with full power and authority to enter into the Related Documents and the transactions contemplated thereby and to perform all of its obligations thereunder.

(b) Lessee has duly authorized the execution and delivery of the Related Documents by proper action of its governing body at a meeting duly called, regularly convened and attended throughout by the requisite quorum of the members thereof, or by other appropriate official approval, and all requirements have been met and procedures have occurred in order to ensure the validity and enforceability of the Related Documents.

(c) No event or condition that constitutes, or with the giving of notice or the lapse of time or both would constitute, an Event of Default exists at the date hereof. No Event of Non-appropriation has occurred or is threatened with respect to this Agreement.

(d) Lessee will do or cause to be done all things necessary to preserve and keep in full force and effect its existence as a city of the State.

(e) Lessee has complied with such procurement and public bidding requirements as may be applicable to the Related Documents and the acquisition and installation by Lessee of the Equipment.

(f) During the Lease Term, the Equipment will be used by Lessee only for the purpose of performing essential governmental or proprietary functions of Lessee consistent with the permissible scope of Lessee's authority. Lessee does not intend to sell or otherwise dispose of the Equipment or any interest therein prior to the last Rental Payment (including all Renewal Terms) scheduled to be paid hereunder.

(g) Lessee has kept, and throughout the Lease Term shall keep, its books and records in accordance with generally accepted accounting principles and practices consistently applied, and shall deliver to Lessor (i) annual audited financial statements (including (1) a balance sheet, (2) statement of revenues, expenses and changes in fund balances for budget and actual, (3) statement of cash flows, and (4) footnotes, schedules and attachments to the financial statements) within two hundred seventy (270) days after the end of its fiscal year, (ii) such other financial statements and information as Lessor may reasonably request, and (iii) upon Lessor's request, its annual budget for any prior or current fiscal year or for the following fiscal year when approved but not later than thirty (30) days prior to the end of its current fiscal year. The financial statements described in this subsection (g)(i) shall be accompanied by an unqualified opinion of Lessee's independent auditor. Credit information relating to Lessee may be disseminated among Lessor and any of its affiliates and any of their respective successors and assigns.

(h) Lessee has an immediate need for the Equipment and expects to make immediate use of the Equipment. Lessee's need for the Equipment is not temporary and Lessee does not expect the need for any item of the Equipment to diminish during the Scheduled Term.

(i) The payment of the Rental Payments or any portion thereof is not (under the terms of this Agreement or any underlying arrangement) directly or indirectly (x) secured by any interest in property used or to be used in any activity carried on by any person other than a state or local governmental unit or payments in respect of such property; or (y) on a present value basis, derived from payments (whether or not to Lessee) in respect of property, or borrowed money, used or to be used in any activity carried on by any person other than a state or local governmental unit. The Equipment will not be used, directly or indirectly, in any activity carried on by any person other than a state or local governmental unit. No portion of the Acquisition Amount will be used, directly or indirectly, to make or

finance loans to any person other than Lessee. Lessee has not entered into any management or other service contract with respect to the use and operation of the Equipment.

(j) There is no pending litigation, tax claim, proceeding or dispute that may adversely affect Lessee's financial condition or impairs its ability to perform its obligations under the Related Documents. Lessee will, at its expense, maintain its legal existence and do any further act and execute, acknowledge, deliver, file, register and record any further documents Lessor may reasonably request in order to protect Lessor's first priority security interest in the Equipment and the Escrow Account and Lessor's rights and benefits under the Related Documents.

(k) Lessee is the fee owner of the real estate where the Equipment is and will be located (the *"Real Property"*) and has good and marketable title thereto, and there exists no mortgage, pledge, Lien, security interest, charge or other encumbrance of any nature whatsoever on or with respect to such Real Property other than Permitted Encumbrances. In the event any Lien, encumbrance, restriction, asserted encumbrance, claim, dispute or other issue exists or arises with respect to the Lessee's legal title to or valid and marketable, beneficial use and enjoyment of the Real Property or impairs or adversely impacts Lessor's right, title or interest in the Equipment or any of Lessor's rights or remedies under this Agreement with respect to the Equipment (each of the foregoing referred to as a *"Real Property Issue"*), Lessee will take all steps necessary to promptly quiet, resolve and/or eliminate such Real Property Issue to the satisfaction of Lessor and ensure that Lessee and Lessor have adequate access to and use of (including beneficial use and enjoyment of) the Real Property for all purposes of the Equipment contemplated herein and Lessee shall ensure that its fee interest in the Real Property and Lessor's right, title or interest in the Equipment and rights or remedies under this Agreement with respect to the Equipment remain free and clear of Real Property Issues.

(l) No lease, rental agreement, lease-purchase agreement, payment agreement or contract for purchase to which Lessee has been a party at any time has been terminated by Lessee as a result of insufficient funds being appropriated in any fiscal year. No event has occurred which would constitute an event of default under any debt, revenue bond or obligation which Lessee has issued during the past ten (10) years.

(m) Lessee represents to Lessor that it has adopted a debt policy in compliance with SB 1029 and Section 8855 of the Government Code of California *et seq.* and covenants that it shall comply with Section 8855 of the Government Code of California *et seq.* as amended (the *"CDIAC Act"*) throughout the Lease Term, including (i) preparing, submitting and filing the report of the proposed debt issuance relating to this Agreement by the method required by the California Debt and Investment Advisory Commission (*"CDIAC"*), (ii) preparing, submitting and filing the report of final sale (and accompanying documents) relating to this Agreement by the method required by CDIAC, (iii) submitting an annual report relating to the report of final sale for this Agreement by the method required by CDIAC, and (iv) paying all fees charged by CDIAC or the CDIAC Act relating to this Agreement, including, but not limited to the fee in an amount equal to 2.5 basis

points (.025%) of the Acquisition Amount not to exceed five thousand dollars ($5,000) or as otherwise prescribed by the CDIAC Act.

(n) As of the date of execution and delivery of this Agreement, Lessee has not granted any Lien on the Collateral that would be senior in priority to, or pari passu with, the first priority Lien on the Collateral granted to Lessor under Section 6.02 of this Agreement.

(o) The street addresses and legal descriptions affixed to the UCC-1 financing statements and fixture filings filed and recorded pursuant to Section 3.04(vi), Section 6.01 and/or Section 6.02 hereof are true, accurate and complete street addresses and legal descriptions of all the properties on which the Equipment is located or to be installed. In the event any street address, legal description, other information, UCC-1 financing statement or fixture filing (or continuations or amendments thereof) filed or recorded with respect to the Lessor's interests in the Equipment or any of the Real Property on which the Equipment is located or to be installed reflects any incorrect or incomplete Real Property legal description, equipment description or other information, Lessee shall take all steps necessary at its expense (with the Lessor's prior written approval) to promptly correct any errors or deficiencies with respect to such legal descriptions, street address, other information, UCC-1 financing statements and/or fixture filings and to protect Lessor's interests in the Equipment.

(p) Lessee will pay all Equipment Costs and costs of issuance in excess of the Acquisition Amount available therefor out of its own funds. Lessor shall not have any responsibility to pay amounts for any Equipment Costs or costs of issuance with respect to the Related Documents or the Equipment that individually or collectively exceed the Acquisition Amount.

(q) Lessee has complied with California Government Code Section 4217.10 *et seq.* and other applicable law pertaining to the authorization of this Agreement and the financing and acquisition by the Lessee of the Equipment.

(r) To the extent applicable, as determined by Lessee in its sole discretion, Lessee has complied with the requirements of California Government Code Section 5852.1 *et seq.* in connection with this Agreement and the Equipment.

(s) In connection with the Lessee's compliance with any continuing disclosure undertakings (each, a *"Continuing Disclosure Agreement"*) entered into by the Lessee pursuant to SEC Rule 15c2-12 promulgated pursuant to the Securities and Exchange Act of 1934, as amended (the *"Rule"*), the Lessee may be required to file with the Municipal Securities Rulemaking Board's Electronic Municipal Market Access system, or its successor (*"EMMA"*), notice of its incurrence of its obligations under the Related Documents and notice of any accommodation, waiver, amendment, modification of terms or other similar events reflecting financial difficulties in connection with the Related Documents, in each case including posting a full copy thereof or a description of the material terms thereof (each such posting, an *"EMMA Posting"*). Except to the extent

required by applicable law, including the Rule, the Lessee shall not file or submit or permit the filing or submission of any EMMA Posting that includes the following unredacted confidential information about the Lessor or its affiliates and the Escrow Agent in any portion of such EMMA Posting: address, account information and logos of the Lessor or its affiliates and the Escrow Agent; e-mail addresses, telephone numbers, fax numbers, names and signatures of officers, employees and signatories of the Lessor or its affiliates and the Escrow Agent; and the form of Disbursement Request that is attached to the Escrow Agreement. Upon Lessee's request, Lessor endeavors to provide a redacted copy of this Agreement within five business days of the Commencement Date.

The Lessee acknowledges and agrees that the Lessor and its affiliates are not responsible for the Lessee's or any other entity's (including, but not limited to, any broker-dealer's) compliance or noncompliance (or any claims, losses or liabilities arising therefrom) with the Rule, any Continuing Disclosure Agreement or any applicable securities or other laws, including but not limited to those relating to the Rule.

(t) The Lessee represents, warranties and covenants that the addresses and legal descriptions provided by Lessee to Lessor for the Real Property are the true, correct and complete addresses and legal descriptions for each of the locations described on Exhibit A.

(u) The Lessee represents, warranties and covenants that (A) Lessee is the fee owner of the Real Property; (B) no Permitted Future Encumbrance shall prohibit the Lessee, at any time and from time to time, in its sole discretion and at its own expense, from installing or permitting to be installed, or removing, the Equipment or other personal property in or upon the Real Property (including, but not limited to, any Permitted Future Encumbrance Real Property); (C) the Equipment shall remain the sole property of the Lessee (subject only to Lessor's first priority security interest therein), and no entity or individual with any interest in any Permitted Future Encumbrance shall have any interest therein; (D) nothing in any Permitted Future Encumbrance shall prevent the Lessor from foreclosing on its first priority security interest in the Equipment; and (E) upon the occurrence of an Event of Default or an Event of Non-appropriation, upon Lessor's request, Lessee shall enter onto said Real Property (including, but not limited to, any Permitted Future Encumbrance Real Property), physically detach, remove and return the Equipment to Lessor.

ARTICLE III

Section 3.01. Lease of Equipment. Subject to the terms and conditions of this Agreement, Lessor agrees to provide the Acquisition Amount to acquire and install the Equipment. Lessor hereby demises, leases and transfers to Lessee, and Lessee hereby acquires, rents and leases from Lessor, the Equipment. The Lease Term may be continued, solely at the option of Lessee, at the end of the Original Term or any Renewal Term for the next succeeding Renewal Term up to the maximum Scheduled Term as set forth in the Payment Schedule. At the end of the Original Term and at the end of each Renewal Term until the maximum Scheduled Term has been completed, Lessee shall be deemed to have exercised its option to continue this Agreement for the next

Renewal Term unless Lessee shall have terminated this Agreement pursuant to Section 3.03 or Section 10.01 of this Agreement. The terms and conditions during any Renewal Term shall be the same as the terms and conditions during the Original Term, except that the Rental Payments shall be as provided in the Payment Schedule.

Section 3.02. Continuation of Lease Term. Lessee intends, subject to Section 3.03 hereof, to continue the Lease Term through the Original Term and all Renewal Terms and to pay the Rental Payments due hereunder. Lessee affirms that sufficient funds are legally available to pay all Rental Payments when due during the current fiscal year, and Lessee reasonably believes that an amount sufficient to make all Rental Payments during the entire Scheduled Term can be obtained from legally available funds of Lessee. Lessee further intends to do all things lawfully within its power to obtain and maintain funds sufficient and available to discharge its obligation to make Rental Payments due hereunder, including making provision for such payments to the extent necessary in each budget or appropriation request submitted and adopted in accordance with applicable provisions of law. Notwithstanding the foregoing, the decision whether or not to budget and appropriate funds or to extend the Lease Term for any Renewal Term is within the sole discretion of the governing body of Lessee.

Section 3.03. Non-appropriation. Lessee is obligated only to pay such Rental Payments as may lawfully be made during Lessee's then current fiscal year from funds budgeted and appropriated for that purpose. Should Lessee fail to budget, appropriate or otherwise make available funds to pay Rental Payments following the then current Original Term or Renewal Term, this Agreement shall be deemed terminated at the end of the then current Original Term or Renewal Term. Lessee agrees to deliver notice to Lessor of such termination promptly after any decision to non-appropriate is made, but failure to give such notice shall not extend the term beyond such Original Term or Renewal Term. If this Agreement is terminated in accordance with this Section 3.03, Lessee agrees to cease use of the Equipment and peaceably remove and deliver to Lessor, at Lessee's sole expense (from legally available funds), the Equipment to Lessor at the location(s) to be specified by Lessor.

Section 3.04. Conditions to Lessor's Performance. (a) As a prerequisite to the performance by Lessor of any of its obligations under this Agreement, Lessee shall deliver to Lessor, in form and substance satisfactory to Lessor, the following:

(i) An Escrow Agreement substantially in the form attached hereto as *Exhibit I*, satisfactory to Lessor and executed by Lessee and the Escrow Agent and a Vendor Agreement satisfactory to Lessor and executed by Lessee and the Vendor;

(ii) A certified copy of a resolution, ordinance or other official action of Lessee's governing body, substantially in the form attached hereto as *Exhibit C-1*, authorizing the execution and delivery of this Agreement and the Escrow Agreement and performance by Lessee of its obligations under this Agreement and the Escrow Agreement;

(iii) A Certificate completed and executed by the Clerk or Secretary or other comparable officer of Lessee, substantially in the form attached hereto as *Exhibit C-2*, completed to the satisfaction of Lessor;

(iv) Opinions of Special Counsel and general counsel to Lessee, which in the aggregate opine on the matters set forth in the form attached hereto as *Exhibit D* and which are otherwise satisfactory to Lessor;

(v) Evidence of insurance as required by Section 7.02 hereof;

(vi) All documents, including financing statements, affidavits, notices and similar instruments which Lessor deems necessary or appropriate at that time pursuant to Section 6.02 hereof;

(vii) A waiver or waivers of interest in the Equipment from any mortgagee or any other party having an interest in the real estate on which the Equipment will be located and/or landlord of the real estate on which the Equipment will be located and amendments and agreements releasing Liens and encumbrances, if any, on the real property where the Equipment is and will be located;

(viii) Reserved;

(ix) A copy of the Form 8038-G, fully completed by Special Counsel as paid preparer and executed by Lessee;

(x) In the event that Lessee is to be reimbursed for expenditures that it has paid more than sixty (60) days prior to the Commencement Date, evidence of the adoption of a reimbursement resolution or other official action covering the reimbursement from tax exempt proceeds of expenditures incurred not more than sixty (60) days prior to the date of such resolution;

(xi) Copies of invoices (and proofs of payment of such invoices, if Lessee seeks reimbursement) and bills of sale (if title to Equipment has passed to Lessee), to the extent required by Section 5.01(b) hereof;

(xii) Wire instructions for payments to be made to Vendors and Form W-9 from each such Vendor;

(xiii) A certified copy of any Surety Bond satisfying the conditions set forth in Section 7.04 hereof, or, at Lessor's sole discretion, such Surety Bonds may be provided after the Commencement Date, *provided however,* that no "Disbursement Request" pursuant to the Escrow Agreement (other than for costs of issuance) shall be authorized by Lessor until such Surety Bonds satisfying the conditions set forth in Section 7.04 have been delivered to Lessor; and

(xiv) Such other items reasonably required by Lessor.

(b) In addition to satisfaction of the conditions set forth in subsection (a) of this Section 3.04, the performance by Lessor of any of its obligations under the Related Documents shall be subject to: (i) no Material Adverse Change having occurred since the date of this

Agreement, (ii) no Event of Default having occurred and then be continuing and (iii) no Event of Non-appropriation having occurred or being threatened with respect to this Agreement.

(c) Subject to satisfaction of the foregoing, Lessor will deposit the Acquisition Amount with the Escrow Agent to be held and disbursed pursuant to the Escrow Agreement.

Section 3.05. Evidence of Filing Form 8038-G. As soon as it is available, Lessee shall provide to Lessor evidence that it, or its paid preparer, has filed the Form 8038-G for this Agreement with the Internal Revenue Service by delivering to Lessor proof of mailing such Form 8038-G. Notwithstanding anything to the contrary in this Agreement, it shall not be an Event of Default hereunder if Lessee does not provide to Lessor evidence that it (or its paid preparer) filed the Form 8038-G for this Agreement with the Internal Revenue Service.

ARTICLE IV

Section 4.01. Rental Payments. Subject to Section 3.03 of this Agreement, Lessee shall promptly pay Rental Payments, in lawful money of the United States of America, to Lessor on the Rental Payment Dates and in such amounts as provided in the Payment Schedule. If any Rental Payment or other amount payable hereunder is not paid within ten (10) days of its due date, Lessee shall pay an administrative late charge of five percent (5%) of the amount not timely paid or the maximum amount permitted by law, whichever is less. Lessee shall not permit the Federal Government to guarantee any Rental Payments under this Agreement. Rental Payments consist of principal and interest components as more fully detailed on the Payment Schedule, the interest on which begins to accrue as of the Commencement Date.

Section 4.02. Interest and Principal Components. A portion of each Rental Payment is paid as, and represents payment of, interest, and the balance of each Rental Payment is paid as, and represents payment of, principal as more fully detailed on the Payment Schedule.

Section 4.03. Rental Payments to Constitute a Current Expense of Lessee. Lessor and Lessee understand and intend that the obligation of Lessee to pay Rental Payments shall constitute a current expense of Lessee payable solely from its general fund or other funds that are legally available for that purpose and shall not in any way be construed to be a debt of Lessee in contravention of any applicable constitutional or statutory limitation or requirement concerning the creation of indebtedness by Lessee, nor shall anything contained herein constitute a pledge of the general tax revenues, funds or moneys of Lessee.

Section 4.04. Rental Payments to be Unconditional. Except as provided in Section 3.03 of this Agreement, the obligations of Lessee to make Rental Payments and to perform and observe the other covenants and agreements contained in this Agreement shall be absolute and unconditional in all events without abatement, diminution, deduction, set-off or defense, for any reason, including without limitation any failure of the Equipment, disputes with the Lessor or the Vendor of any Equipment, any defects, malfunctions, breakdowns or infirmities in the Equipment or any accident, condemnation or unforeseen circumstances, or failure of any Vendor to deliver any Equipment or otherwise perform any of its obligations for whatever reason, including bankruptcy, insolvency, reorganization or any similar event with respect to any Vendor or under

any Vendor Agreement, or the failure or inability (for whatever reason) of Lessee to receive (or delay in receipt of) all or any portion of any Project Grant or other grant, subsidy, or other incentive, including but not limited to any refundable tax credit under Section 6417 of the Internal Revenue Code of 1986, as amended by the Inflation Reduction Act of 2022 (Pub. L. No. 117-169), any amounts described or derived from California Assembly Bill AB 841, any federal, state, local, private or other incentives or rebates or any substantially similar (to any of the foregoing) provision of federal, state, local or foreign tax or other law (including regulations or other guidance from any taxing or other authority).

Section 4.05. Tax Covenants. Lessee agrees that it will not take any action that would cause the interest component of Rental Payments to be or to become ineligible for the exclusion from gross income of the owner or owners thereof for Federal income tax purposes, nor will it omit to take or cause to be taken, in a timely manner, any action, which omission would cause the interest component of Rental Payments to be or to become ineligible for the exclusion from gross income of the owner or owners thereof for Federal income tax purposes. In connection with the foregoing, Lessee hereby agrees that (a) so long as any Rental Payments remain unpaid, moneys on deposit in the Escrow Account shall not be used in a manner that will cause this Agreement to be classified as an "arbitrage bond" within the meaning of Section 148(a) of the Code; and (b) Lessee shall rebate, from funds legally available for the purpose, an amount equal to excess earnings on the Escrow Account to the Federal Government if required by, and in accordance with, Section 148(f) of the Code, and make the determinations and maintain the records required by the Code.

Section 4.06. Event of Taxability. Upon the occurrence of an Event of Taxability, the interest component of Rental Payments and any charge on Rental Payments or other amounts payable based on the Contract Rate shall have accrued and be payable at the Taxable Rate retroactive to the date as of which the interest component is determined by the Internal Revenue Service to be includable in the gross income of the owner or owners thereof for Federal income tax purposes (which retroactive date shall be the earliest date as of which the interest component of any Rental Payment is deemed includable in the gross income of the owner or owners thereof for Federal income tax purposes, which may be earlier than the date of delivery of such determination by the Internal Revenue Service), and Lessee will pay such additional amount as will result in the owner receiving the interest component at the Taxable Rate.

For purposes of this Section, *"Event of Taxability"* means the circumstance of the interest component of any Rental Payment paid or payable pursuant to this Agreement becoming includable for Federal income tax purposes in an owner's gross income as a consequence of any act, omission or event whatsoever, including but not limited to the matters described in the immediately succeeding sentence, and regardless of whether the same was within or beyond the control of Lessee. An Event of Taxability shall be presumed to have occurred upon (a) the receipt by Lessor or Lessee of an original or a copy of an Internal Revenue Service Technical Advice Memorandum or Statutory Notice of Deficiency or other written correspondence which legally holds that the interest component of any Rental Payment is includable in the gross income of the owner thereof; (b) the issuance of any public or private ruling of the Internal Revenue Service that the interest component of any Rental Payment is includable in the gross income of the owner thereof; or (c) receipt by Lessor or Lessee of a written opinion of a nationally recognized firm of attorneys experienced in matters pertaining to the tax-exempt status of interest on obligations

issued by states and their political subdivisions, selected by Lessor and acceptable to Lessee, to the effect that the interest component of any Rental Payment has become includable in the gross income of the owner thereof for Federal income tax purposes. For all purposes of this definition, an Event of Taxability shall be deemed to occur on the date as of which the interest component of any Rental Payment is deemed includable in the gross income of the owner thereof for Federal income tax purposes.

Section 4.07. Mandatory Prepayment. (a) Any funds not applied to Equipment Costs and remaining in the Escrow Account on the earliest of (i) the expiration of the Acquisition Period, (ii) the date on which Lessee delivers to the Lessor the executed Disbursement Request to effect the final disbursement to pay (or reimburse) Equipment Costs from the Escrow Account or (iii) a termination of the Escrow Account as provided in the Escrow Agreement shall be applied by Lessor on each successive Rental Payment Date thereafter to pay all or a portion of the Rental Payment due and owing in the succeeding twelve (12) months and any remaining amounts shall be applied by Lessor as prepayment to the applicable unpaid Principal Portion of Rental Payments owing hereunder in the inverse order of the Rental Payment Dates at a price of 100% of such prepaid Principal Portion plus accrued interest thereon to the prepayment date.

(b) In connection with any partial prepayment of Rental Payments, Lessor shall prepare a new Payment Schedule and deliver the same to the Lessee, which shall be binding, absent manifest error.

Section 4.08. Covenant Regarding Lessee's Contribution. Lessee hereby covenants to pay, from legally available funds $10,006,655 (or such other amount approved by Lessor) of costs to acquire and install the Equipment, which Lessee's Contribution amount is separate and apart from, and in addition to, the Acquisition Amount hereunder. Lessee hereby further acknowledges and agrees that the Escrow Agent is not authorized to disburse, and Lessor will not approve any disbursement from the Acquisition Amount from the Escrow Account for the last $10,000,000 of the $18,524,650 needed to pay for WTP & HARRF Excluded Equipment unless and until (a) Lessee has provided written evidence satisfactory to Lessor that (i) Lessee has paid and distributed at least $10,006,655 (or such other amount approved by the Lessor) towards the cost of the Equipment from the Lessee's Contribution and (ii) all solar photovoltaic systems and renewable energy equipment (other than Financed Renewables) to be installed pursuant to the Climatec Contract have been completely paid for by Lessee, installed, and unconditionally accepted by Lessee and (b) payment and distribution of the Lessee's Contribution in full. Lessee shall not be obligated to deposit the Lessee's Contribution in the Escrow Account or in any other account or fund under this Agreement or the Escrow Agreement, but shall pay Equipment Costs for the Equipment directly to the related Vendors from and after the Commencement Date and provide such evidence of the dates, amounts and payees of such expenditures of the Lessee's Contribution as Lessor may reasonably request.

ARTICLE V

Section 5.01. Acquisition, Delivery, Installation and Acceptance of Equipment. (a) Lessee shall order the Equipment to be acquired and financed hereunder, cause the Equipment to be delivered and installed at the location specified in the Equipment Schedule and pay any and all

delivery and installation costs and other Equipment Costs in connection therewith. Lessee shall conduct such inspection and testing of the Equipment as it deems necessary and appropriate in order to unconditionally accept such Equipment. When the Equipment has been delivered and installed, including any component of the Equipment, Lessee shall promptly accept such Equipment and evidence said acceptance by executing and delivering Disbursement Requests to the Lessor pursuant to the Escrow Agreement for the purpose of effecting disbursements from the Escrow Account to pay (or reimburse) Equipment Costs for the Equipment so acquired and installed. In connection with the execution and delivery by Lessee to Lessor of the final Disbursement Request, Lessee shall deliver to Lessor a "Final Acceptance Certificate" in the form attached hereto as Exhibit E.

(b) Lessee shall deliver to Lessor together with each Disbursement Request copies of invoices (and proof of payment of such invoices if Lessee seeks reimbursement for prior expenditures) and bills of sale or other evidence of title transfer to Lessee relating to each item of Equipment accepted by Lessee as evidenced by such Disbursement Request. Once approved, Lessor shall deliver such Disbursement Request to the Escrow Agent for disbursement from the Escrow Account in accordance with the Escrow Agreement.

Section 5.02. Quiet Enjoyment of Equipment. So long as no Event of Default and no Event of Non-appropriation exists hereunder, neither Lessor nor any entity claiming by, through or under Lessor, shall interfere with Lessee's quiet use and enjoyment of the Equipment during the Lease Term.

Section 5.03. Location; Inspection. Once installed, no item of the Equipment will be moved or relocated from the location specified for it in the Equipment Schedule without Lessor's prior written consent, which consent shall not be unreasonably withheld. Lessor shall have the right at all reasonable times during regular business hours to enter into and upon the property where the Equipment is located for the purpose of inspecting the Equipment.

Section 5.04. Use and Maintenance of the Equipment. Lessee shall not install, use, operate or maintain the Equipment (or cause the Equipment to be installed, used, operated or maintained) improperly, carelessly, in violation of any applicable law or in a manner contrary to that contemplated hereby. Lessee shall provide all permits and licenses, if any, necessary for the installation and operation of the Equipment. In addition, Lessee agrees to comply in all respects with all applicable laws, regulations and rulings of any legislative, executive, administrative, or judicial body, including, without limitation, all anti-money laundering laws and regulations; *provided* that Lessee may contest in good faith the validity or application of any such law, regulation or ruling in any reasonable manner that does not, in the opinion of Lessor, adversely affect the interest of Lessor in and to the Equipment or its interest or rights hereunder.

Lessee agrees that it shall (a) maintain, preserve, and keep the Equipment in good repair and working order, in a condition comparable to that recommended by the manufacturer; (b) proceed promptly, at its expense, to protect its rights and exercise its remedies under any warranty then in effect with respect to the Equipment; and (c) replace or rebuild any component of the Equipment that becomes permanently unfit for normal use or inoperable during the Lease Term (herein, the *"Inoperable Component"*) in order to keep the Equipment as a whole in good

repair and working order during the Lease Term. Lessee shall promptly notify Lessor in writing when any component of the Equipment is reasonably expected within forty-five (45) days to become an Inoperable Component. Lessee shall promptly replace or rebuild the Inoperable Component with a similar component of comparable or improved make and model that has at least the equivalent value and utility of the Inoperable Component, a remaining useful life of no less than the remaining Scheduled Term and such replacement or rebuilt component shall be in good operating condition. Lessor shall have no responsibility to maintain, repair or make improvements or additions to the Equipment. In all cases, Lessee agrees to pay any costs necessary for the manufacturer to re-certify the Equipment as eligible for manufacturer's maintenance upon the return of the Equipment to Lessor as provided for in Sections 3.03 and 12.02(b) of this Agreement.

Lessee shall not alter any item of Equipment or install any accessory, equipment or device on an item of Equipment if that would impair any applicable warranty, the originally intended function or the value of that Equipment. All repairs, parts, accessories, equipment and devices furnished, affixed to or installed on any Equipment, excluding temporary replacements, shall thereupon become subject to the security interest of Lessor.

ARTICLE VI

Section 6.01. Title to the Equipment. During the Lease Term, so long as Lessee is not in default under Article XII hereof and an Event of Non-appropriation has not occurred, all right, title and interest in and to each item of the Equipment shall be vested in Lessee immediately upon its acceptance of each item of Equipment, subject to the terms and conditions hereof. Lessee shall at all times protect and defend, at its own cost and expense, its title, and Lessor's first priority security interest, in and to the Equipment (and Lessor's other Collateral as defined in Section 6.02 hereof) from and against all claims, Liens and legal processes of its creditors, and keep all Equipment (and such other Collateral) free and clear of all such claims, Liens and processes. Lessee will, at its expense, do any further act and execute, acknowledge, deliver, file, register and record any further documents the Lessor may reasonably request in order to protect Lessor's first priority security interest in the Collateral. Upon the occurrence of an Event of Default or upon termination of this Agreement pursuant to Section 3.03 hereof, full and unencumbered legal title to the Equipment shall, at Lessor's option, pass to Lessor, and Lessee shall have no further interest therein. In addition, upon the occurrence of such an Event of Default or such termination, Lessee shall execute and deliver to Lessor such documents as Lessor may request to evidence the passage of such legal title to Lessor and the termination of Lessee's interest therein, and upon request by Lessor shall deliver possession of the Equipment to Lessor in accordance with Section 3.03 or 12.02 of this Agreement, as applicable. Upon payment of all amounts due and owing hereunder by Lessee in accordance with Section 10.01 hereof, Lessor's security interest or other interest in the Equipment shall terminate, and Lessor shall execute and deliver to Lessee such documents as Lessee may reasonably request to evidence the termination of Lessor's security interest in the Equipment.

Section 6.02. Security Interest. As additional security for the payment and performance of all of Lessee's obligations hereunder, Lessee hereby grants to Lessor a first priority security interest constituting a first Lien on (a) the Equipment, together with all replacements, repairs, restorations, modifications and improvements thereof or thereto and all accessories, equipment, parts and appurtenances appertaining or attached to any of the Equipment, and all substitutions,

renewals, or replacements of and additions, improvements, accessions and accumulations to any and all of such Equipment, together with all the rents, issues, income, profits, proceeds and avails therefrom, (b) moneys and investments held from time to time in the Escrow Account, (c) all accounts, chattel paper, deposit accounts, documents, instruments, general intangibles and investment property (including any securities accounts and security entitlements relating thereto) evidenced by or arising out of or otherwise relating to the foregoing collateral described in clauses (a) and (b) above, as such terms are defined in Article 9 of the California Commercial Code, and (d) any and all proceeds of any and all of the foregoing, including, without limitation, insurance proceeds (collectively, the *"Collateral"*). Lessee authorizes Lessor to file (and Lessee agrees to execute, if applicable) such notices of assignment, chattel mortgages, financing statements and other documents, in form satisfactory to Lessor, which Lessor deems necessary or appropriate to establish and maintain Lessor's security interest in the Collateral, including, without limitation, such financing statements with respect to personal property and fixtures under Article 9 of the California Commercial Code and treating such Article 9 as applicable to entities such as Lessee.

Section 6.03. Personal Property, No Encumbrances. (a) Lessee agrees that the Equipment is deemed to be and will remain personal property, and will not be deemed to be affixed to or a part of the real estate on which it may be situated, notwithstanding that the Equipment or any part thereof may be or hereafter become in any manner physically affixed or attached to real estate or any building thereon. Lessee shall not create, incur, assume or permit to exist any mortgage, pledge, Lien, security interest, charge or other encumbrance of any nature whatsoever except for Permitted Encumbrances on any of the real estate where the Equipment is or will be located or enter into any agreement to sell or assign or enter into any sale/leaseback arrangement of such real estate without the prior written consent of Lessor; *provided,* that if Lessor or its assigns is furnished with a waiver of interest in the Equipment acceptable to Lessor or its assigns in their respective discretion from any party taking an interest in any such real estate prior to such interest taking effect, such consent shall not be unreasonably withheld.

(b) Following the Commencement Date, in connection with a future financing, the Lessee may encumber the Real Property or enter into any sale/leaseback or lease/leaseback arrangement of such real estate that is filed on the Real Property, in each case, *provided* that all costs and expenses incurred in connection with such Proposed Encumbrance shall be borne by the Lessee and, *provided further* that with respect to any Proposed Encumbrance, the Lessee must first satisfy all of the following requirements which are hereby declared to be conditions precedent to any such Proposed Encumbrance becoming a Permitted Future Encumbrance:

(1) The Lessee covenants, agrees and shall ensure that the Lessee and Lessor will each have, at all times during the Scheduled Term and upon an Event of Default or an Event of Non-appropriation, the right to enter onto the Permitted Future Encumbrance Real Property for the purposes of inspecting, repairing or repossessing the Equipment and/or exercising remedies under this Agreement on behalf of Lessor, including, without limitation, the right to physically detach and remove the Equipment from all or any portion of the Permitted Future Encumbrance Real Property and return the same to Lessor.

(2) A valid first priority fixture filing in favor of Lessor as secured party with respect to the Equipment shall first have been filed against the Permitted Future Encumbrance Real Property.

(3) The Lessee executes, and causes the other relevant parties thereto to execute, and Lessee records against the Permitted Future Encumbrance Real Property, an acknowledgement and disclaimer of interests for the benefit of Lessor in the form set forth as Exhibit G hereto, with such reasonably requested revisions as first approved in writing by the Lessor (which approval shall not be unreasonably withheld).

(4) The Lessee provides Lessor with satisfactory evidence that all Collateral hereunder is excluded from the grant, pledge, mortgage, lien, leasehold interest, security interest, charge or other encumbrance granted by the Lessee in favor of the Proposed Encumbrance.

ARTICLE VII

Section 7.01. Liens, Taxes, Other Governmental Charges and Utility Charges. Lessee shall keep the Equipment free of all levies, Liens, and encumbrances except those created by this Agreement. The parties to this Agreement contemplate that the Equipment will be used for a governmental or proprietary purpose of Lessee and that the Equipment will therefore be exempt from all property taxes. If the lease, sale, purchase, operation, use, possession or acquisition of any Equipment is nevertheless determined to be subject to taxation, Lessee shall pay when due all sales and other taxes, special assessments, governmental and other charges of any kind that are at any time lawfully assessed or levied against or with respect to the Equipment, the Rental Payments or any part of either thereof, or which become due during the Lease Term, whether assessed against Lessee or Lessor. Lessee shall pay all utility and other charges incurred in the operation, use and maintenance of the Equipment. Lessee shall pay such taxes, assessments or charges as the same may become due; *provided* that, with respect to any such taxes, assessments or charges that may lawfully be paid in installments over a period of years, Lessee shall be obligated to pay only such installments as accrue during the Lease Term. Lessor will not claim ownership of the Equipment under this Agreement for the purposes of any tax credits, benefits or deductions with respect to such Equipment. Lessee shall pay the fee charged by the California Debt and Investment Advisory Commission with respect to this Agreement pursuant to Section 8856 (or any successor provision) of the California Government Code.

Section 7.02. Insurance. Lessee shall during the Lease Term maintain or cause to be maintained (a) casualty insurance naming Lessor and its assigns as loss payee and insuring the Equipment against loss or damage by fire and all other risks covered by the standard extended coverage endorsement then in use in the State, and any other risks reasonably required by Lessor, in an amount at least equal to the greater of (i) the then applicable Outstanding Balance or (ii) the replacement cost of the Equipment; (b) liability insurance naming Lessor and its assigns as additional insured that protects Lessor from liability with limits of at least $5,000,000 per occurrence for bodily injury and property damage coverage (such liability insurance coverage may be in a combination of primary general liability and/or excess liability umbrella coverage), and in all events under clauses (a) and (b) above issued in form and amount satisfactory to Lessor and by

an insurance company that is authorized to do business in the State and having a financial strength rating by A.M. Best Company of "A-" or better; and (c) worker's compensation coverage as required by the laws of the State. Notwithstanding the foregoing, Lessee may self-insure against the risks described in clauses (a) and/or (b) through a government pooling arrangement, self-funded loss reserves, risk retention program or other self-insurance program, in each case with Lessor's prior written consent (which Lessor may grant, withhold or deny in its sole discretion) and *provided* that Lessee has delivered to Lessor such information as Lessor may request with respect to the adequacy of such self-insurance to cover the risks proposed to be self-insured and otherwise in form and substance acceptable to Lessor. In the event Lessee is permitted, at Lessor's sole discretion, to self-insure as provided in this Section 7.02, Lessee shall provide to Lessor a self-insurance letter in form and substance satisfactory to Lessor, in Lessor's sole discretion. Lessee shall furnish to Lessor evidence of such insurance or self-insurance coverage throughout the Lease Term. Lessee shall not cancel or modify such insurance or self-insurance coverage in any way that would affect the interests of Lessor without first giving written notice thereof to Lessor at least thirty (30) days in advance of such cancellation or modification.

Section 7.03. Risk of Loss. Whether or not covered by insurance or self-insurance, Lessee hereby assumes all risk of loss of, or damage to and liability related to injury or damage to any persons or property arising from the Equipment from any cause whatsoever, and no such loss of or damage to or liability arising from the Equipment shall relieve Lessee of the obligation to make the Rental Payments or to perform any other obligation under this Agreement. Whether or not covered by insurance or self-insurance, Lessee hereby agrees to reimburse Lessor (to the fullest extent permitted by applicable law, but only from legally available funds) for any and all liabilities, obligations, losses, costs, claims, taxes or damages suffered or incurred by Lessor, regardless of the cause thereof and all expenses incurred in connection therewith (including, without limitation, counsel fees and expenses, and penalties connected therewith imposed on interest received) arising out of or as a result of (a) entering into this Agreement or any of the transactions contemplated hereby, (b) the ordering, acquisition, ownership use, operation, condition, purchase, delivery, acceptance, rejection, storage or return of any item of the Equipment, (c) any accident in connection with the operation, use, condition, possession, storage or return of any item of the Equipment resulting in damage to property or injury to or death to any person, and/or (d) the breach of any covenant of Lessee under or in connection with this Agreement or any material misrepresentation provided by Lessee under or in connection with this Agreement. The provisions of this Section 7.03 shall continue in full force and effect notwithstanding the full payment of all obligations under this Agreement or the termination of the Lease Term for any reason.

Section 7.04. Surety Bonds; *Lessee to Pursue Remedies Against Contractors and Sub-Contractors and Their Sureties*. Lessee shall secure from each Vendor directly employed by Lessee in connection with the acquisition, construction, installation, improvement or equipping of the Equipment, a payment and performance bond (*"Surety Bond"*) executed by a surety company authorized to do business in the State, having a financial strength rating by A.M. Best Company of "A-" or better, and otherwise satisfactory to Lessor and naming Lessor as a co-obligee in a sum equal to the entire amount to become payable under each Vendor Agreement. Each bond shall be conditioned on the completion of the work in accordance with the plans and specifications for the Equipment and upon payment of all claims of subcontractors and suppliers. Lessee shall cause the surety company to add Lessor as a co-obligee on each Surety Bond, and shall deliver a certified

copy of each Surety Bond to Lessor promptly upon receipt thereof by Lessee. Any proceeds from a Surety Bond shall be applied in accordance with such Surety Bond to the payment and performance of the Vendor's obligations in accordance with the related Vendor Agreement and, if for whatever reason such proceeds are not so applied, first to amounts due Lessor under this Agreement, and any remaining amounts shall be payable to Lessee.

In the event of a material default by any Vendor under any Vendor Agreement in connection with the acquisition, construction, maintenance and/or servicing of the Equipment or in the event of a material breach of warranty with respect to any material workmanship or performance guaranty with respect to the Equipment, Lessee will promptly proceed to exhaust its remedies against the Vendor in default. Lessee shall advise Lessor of the steps it intends to take in connection with any such default. Any amounts received by Lessee in respect of damages, refunds, adjustments or otherwise in connection with the foregoing shall be paid to Lessor and applied against Lessee's obligations hereunder.

Section 7.05. Advances. In the event Lessee shall fail to keep the Equipment in good repair and working order or shall fail to maintain any insurance required by Section 7.02 hereof, Lessor may, but shall be under no obligation to, maintain and repair the Equipment or obtain and maintain any such insurance coverages, as the case may be, and pay the cost thereof. All amounts so advanced by Lessor shall constitute additional rent for the then current Original Term or Renewal Term and Lessee covenants and agrees to pay such amounts so advanced by Lessor with interest thereon from the due date until paid at a rate equal to the Contract Rate (or the Taxable Rate if then in effect) *plus* five percent (5%) per annum or the maximum amount permitted by law, whichever is less.

ARTICLE VIII

Section 8.01. Damage, Destruction and Condemnation. If, prior to the termination of the Lease Term, (a) the Equipment or any portion thereof is destroyed, in whole or in part, or is damaged by fire or other casualty or (b) title to, or the temporary use of, the Equipment or any part thereof shall be taken under the exercise or threat of the power of eminent domain by any governmental body or by any person, firm or corporation acting pursuant to governmental authority, (i) Lessee and Lessor will cause the Net Proceeds of any insurance claim or condemnation award or sale under threat of condemnation to be applied to the prompt replacement, repair, restoration, modification or improvement of the Equipment or such part thereof and any balance of the Net Proceeds remaining after such work has been completed shall be paid to Lessee or (ii) Lessee shall exercise its option to prepay the obligations hereunder in accordance with Section 10.01(a)(ii) hereof.

If Lessee elects to replace any item of the Equipment (the *"Replaced Equipment"*) pursuant to this Section 8.01, the replacement equipment (the *"Replacement Equipment"*) shall be new or of a quality, type, utility and condition at least as good as the Replaced Equipment, shall be of equal or greater value than the Replaced Equipment and shall provide at least the same level of energy and/or operational savings expected in the aggregate from the Replaced Equipment prior to such casualty, destruction or condemnation and shall have an expected remaining useful life at least through the Scheduled Term. Lessee shall grant to Lessor a first priority security interest in

any such Replacement Equipment. Lessee shall represent, warrant and covenant to Lessor that each item of Replacement Equipment is free and clear of all claims, Liens, security interests and encumbrances, excepting only those Liens created by or through Lessor, and shall provide to Lessor any and all documents as Lessor may reasonably request in connection with the replacement, including, but not limited to, documentation in form and substance satisfactory to Lessor evidencing Lessor's security interest in the Replacement Equipment. Lessor and Lessee hereby acknowledge and agree that any Replacement Equipment acquired pursuant to this paragraph shall constitute "Equipment" for purposes of this Agreement. Lessee shall complete the documentation of Replacement Equipment on or before the next Rental Payment Date after the occurrence of a casualty event, or be required to exercise its option to prepay the obligations hereunder with respect to the damaged Equipment in accordance with Section 10.01(a)(ii) hereof.

For purposes of this Article VIII, the term *"Net Proceeds"* shall mean the amount remaining from the gross proceeds of any insurance claim or condemnation award or sale under threat of condemnation after deducting all expenses, including attorneys' fees, incurred in the collection thereof.

Section 8.02. Insufficiency of Net Proceeds. If the Net Proceeds are insufficient to pay in full the cost of any repair, restoration, modification or improvement referred to in Section 8.01, Lessee shall either (a) complete such replacement, repair, restoration, modification or improvement and pay any costs thereof in excess of the amount of the Net Proceeds, or (b) pay or cause to be paid to Lessor the amount of the then applicable Casualty Value *plus* all other amounts then owing hereunder, and, upon such payment, the Lease Term shall terminate and Lessor's security interest in the Equipment shall terminate as provided in Section 6.01 hereof. The amount of the Net Proceeds remaining, if any, after completing such repair, restoration, modification or improvement or after paying such Casualty Value *plus* all other amounts then owing hereunder shall be retained by Lessee. If Lessee shall make any payments pursuant to this Section 8.02, Lessee shall not be entitled to any reimbursement therefor from Lessor nor shall Lessee be entitled to any diminution of the amounts payable under Article IV.

ARTICLE IX

Section 9.01. Disclaimer of Warranties. Lessor makes no warranty or representation, either express or implied, as to the value, design, condition, merchantability or fitness for particular purpose or fitness for use of any of the Equipment, or any other warranty or representation, express or implied, with respect thereto and, as to Lessor, Lessee's acquisition of the Equipment shall be on an "as is" basis. In no event shall Lessor be liable for any incidental, indirect, special or consequential damage in connection with or arising out of this Agreement, the Equipment or the existence, furnishing, functioning or Lessee's use of any item, product or service provided for in this Agreement.

Section 9.02. Vendor Agreements; Warranties. Lessee covenants that it shall not in any material respect amend, modify, rescind or alter any Vendor Agreement without the prior written consent of Lessor. Lessor hereby irrevocably appoints Lessee its agent and attorney-in-fact during the Lease Term, so long as Lessee shall not be in default under this Agreement and so long as no Event of Non-appropriation has occurred, to assert from time to time whatever claims and rights

(including without limitation warranties) relating to the Equipment that Lessor may have against a Vendor. Lessee's sole remedy for the breach of such warranty, indemnification or representation shall be against the applicable Vendor of the Equipment, and not against Lessor. Any such matter shall not have any effect whatsoever on the rights and obligations of Lessor under this Agreement, including the right to receive full and timely Rental Payments and other payments hereunder. Lessee expressly acknowledges that Lessor makes, and has made, no representations or warranties whatsoever as to the existence or the availability of such warranties relating to any of the Equipment.

ARTICLE X

Section 10.01. Prepayment; Payment in Full or in Part.

(a) *Prepayment.* Lessee shall have the option to prepay or satisfy some or all of its obligations hereunder, at the following times and upon the following terms:

(i) *Optional Prepayment in Whole.* From and after the date specified (if any) in the Payment Schedule (the *"Prepayment Option Commencement Date"*), on the Rental Payment Dates specified in the Payment Schedule, upon not less than forty-five (45) days prior written notice, and upon payment in full of the sum of all Rental Payments then due *plus* the then applicable Prepayment Price, which shall include a prepayment premium on the unpaid Outstanding Balance as set forth in the Payment Schedule *plus* all other amounts then owing hereunder; or

(ii) *Casualty or Condemnation Prepayment.* In the event of substantial damage to or destruction or condemnation of substantially all of the Equipment, on the day specified in Lessee's notice to Lessor of its exercise of the prepayment option (which shall be the earlier of the next Rental Payment Date or sixty (60) days after the casualty event) upon payment in full to Lessor of (A) in the event such prepayment occurs on a Rental Payment Date, the sum of (i) all Rental Payments then due *plus* (ii) the then applicable Casualty Value *plus* (iii) all other amounts then owing hereunder OR, (B) in the event such prepayment occurs on a date other than a Rental Payment Date, the sum of (i) the applicable Casualty Value shown on the Payment Schedule for the Rental Payment Date immediately preceding the applicable date of such prepayment (or if the date of such prepayment occurs prior to the first Rental Payment Date, the earliest Casualty Value shown on the Payment Schedule) *plus* (ii) accrued interest at the Contract Rate (or the Taxable Rate if then in effect) on the Outstanding Balance as of the Rental Payment Date immediately preceding the applicable date of such prepayment from such Rental Payment Date (or if the date of such prepayment occurs prior to the first Rental Payment Date, the Commencement Date) to the date of such prepayment *plus* (iii) all other amounts then owing hereunder; or

(iii) *Extraordinary Prepayment in Part.* Prior to August 28, 2028, on any Rental Payment Date following the Lessee's receipt of the Project Grant, upon not less than thirty (30) days prior written notice, the Lessee may exercise a one-time extraordinary prepayment up to a total amount of $_____which shall be applied by Lessor to the applicable unpaid Principal Portion of Rental Payments owing hereunder (on a pro rata

basis) at a price of ____% of such prepaid Principal Portion plus accrued interest thereon to the prepayment date. In connection with any partial prepayment of Rental Payments, Lessor shall prepare a new Payment Schedule and deliver the same to the Lessee, which shall be binding, absent manifest error.

(b) *Payment in Full.* Lessor's security interests in and to the Equipment will be terminated and Lessee will own such Equipment free and clear of Lessor's security interest in such Equipment after either (i) payment of either (A) the applicable Prepayment Price and all other amounts then owing hereunder in accordance with Section 10.01(a)(i) of this Agreement or (B) the applicable Casualty Value and all other amounts then owing hereunder in accordance with Section 10.01(a)(ii) of this Agreement or (ii) upon the expiration of the Scheduled Term and payment in full of all Rental Payments then due and all other amounts then owing hereunder in accordance with this Agreement. Notwithstanding anything herein to the contrary, no portion of Lessor's security interests in and to the Equipment or other Collateral will be terminated due to any partial prepayment pursuant to Section 10.01(a)(iii) of this Agreement.

ARTICLE XI

Section 11.01. Assignment by Lessor. (a) Lessor's right, title and interest in and to this Agreement, the Rental Payments and any other amounts payable by Lessee hereunder, the Escrow Agreement, its security interest in the Collateral (collectively, the *"Assigned Rights"*), may be assigned and reassigned by Lessor at any time, in whole or in part, to one or more assignees or sub-assignees without the necessity of obtaining the consent of Lessee; *provided*, that any such assignment, transfer or conveyance (i) shall be made only to investors each of whom Lessor reasonably believes is a "*qualified institutional buyer*" as defined in Rule 144A(a)(1) promulgated under the Securities Act of 1933, as amended, or an *"accredited investor"* as defined in Section 501(a)(1), (2), (3) or (7) of Regulation D promulgated under the Securities Act of 1933, as amended, and in either case is purchasing the Assigned Rights (or any interest therein) for its own account with no present intention to resell or distribute such Assigned Rights (or interest therein), subject to each investor's right at any time to dispose of the Assigned Rights (or any interest therein) as it determines to be in its best interests, (ii) shall not result in more than 35 owners of the Assigned Rights or the creation of any interest in the Assigned Rights in an aggregate principal component that is less than $100,000 and (iii) shall not require Lessee to make Rental Payments, to send notices or otherwise to deal with respect to matters arising hereunder or under the Escrow Agreement with or to more than one Lease Servicer (as such term is defined below), and any trust agreement, participation agreement or custodial agreement under which multiple ownership interests in the Assigned Rights are created shall provide the method by which the owners of such interests shall establish the rights and duties of a single entity, trustee, owner, servicer or other fiduciary or agent acting on behalf of all of the assignees (herein referred to as the *"Lease Servicer"*) to act on their behalf with respect to the Assigned Rights, including with respect to the exercise of rights and remedies of Lessor on behalf of such owners upon the occurrence of an Event of Default or an Event of Non-appropriation under this Agreement. Lessor and Lessee hereby acknowledge and agree that the restrictions and limitations on transfer as provided in this Section 11.01 shall apply to the first and subsequent assignees and sub-assignees of any of the Assigned Rights (or any interest therein).

(b) Unless to an affiliate controlling, controlled by or under common control with Lessor, no assignment, transfer or conveyance permitted by this Section 11.01 shall be effective as against Lessee until Lessee shall have received a written notice of assignment that discloses the name and address of each such assignee; *provided,* that if such assignment is made to a bank or trust company as trustee or paying agent for owners of certificates of participation, participation interests, trust certificates or partnership interests with respect to the Rental Payments payable under this Agreement, it shall thereafter be sufficient that Lessee receives notice of the name and address of the bank, trust company or other entity that acts as the Lease Servicer. Notices of assignment provided pursuant to this Section 11.01(b) shall contain a confirmation of compliance with the transfer requirements imposed by Section 11.01(a) hereof. During the Lease Term, Lessee shall keep, or cause to be kept, a complete and accurate record of all such assignments in form necessary to comply with Section 149 of the Code. Lessee shall retain all such notices as a register of all assignees and shall make all payments to the assignee or assignees or Lease Servicer last designated in such register. Lessee shall not have the right to and shall not assert against any assignee any claim, counterclaim or other right Lessee may have against Lessor or the Vendor. Assignments in part may include without limitation assignment of all of Lessor's security interest in and to the Equipment and all rights in, to and under this Agreement related to such Equipment, and all of Lessor's security interest in and to the Collateral, or all rights in, to and under the Escrow Agreement.

(c) If Lessor notifies Lessee of its intent to assign this Agreement, Lessee agrees that it shall execute and deliver to Lessor a Notice and Acknowledgement of Assignment substantially in the form of *Exhibit H* attached hereto within five (5) business days after its receipt of such request.

Section 11.02. Assignment and Subleasing by Lessee. **None of Lessee's right, title, and interest in, to and under this Agreement or any portion of the Equipment, the Escrow Agreement, the Escrow Account or any of the other Collateral may be assigned, encumbered or subleased by Lessee for any reason, and any purported assignment, encumbrance or sublease without Lessor's prior written consent shall be null and void.**

ARTICLE XII

Section 12.01. Events of Default Defined. Any of the following events shall constitute an *"Event of Default"* under this Agreement:

(a) Failure by Lessee to (i) pay any Rental Payment or other payment required to be paid under this Agreement within ten (10) days after the date when due as specified herein, (ii) maintain insurance as required herein, or (iii) observe and perform any covenant, condition or agreement on its part to be observed or performed under Section 6.01 or 6.02 hereof;

(b) Failure by Lessee to observe and perform any covenant, condition or agreement contained in this Agreement on its part to be observed or performed, other than as referred to in subsection (a) above, for a period of thirty (30) days after written notice specifying such failure and requesting that it be remedied is given to Lessee by Lessor,

unless Lessor shall agree in writing to an extension of such time prior to its expiration; *provided* that, if the failure stated in the notice cannot be corrected within the applicable period, Lessor will not unreasonably withhold its consent to an extension of such time if corrective action is instituted by Lessee within the applicable period and diligently pursued until the default is corrected;

(c) Any statement, representation or warranty made by Lessee in or pursuant to this Agreement or its execution, delivery or performance shall prove to have been false, incorrect, misleading, or breached in any material respect on the date when made;

(d) Any default occurs under any other agreement for borrowing money, lease financing of property or otherwise receiving credit under which Lessee is an obligor, if such default (i) arises under any other agreement for borrowing money, lease financing of property or provision of credit provided by Lessor or any affiliate of Lessor, or (ii) arises under any obligation under which there is outstanding, owing or committed an aggregated amount in excess of $100,000.00 *provided further* that, obligations referenced in this subsection (d) do not include bonds and other similar obligations issued by Lessee solely as a conduit issuer for which Lessee is never ultimately responsible to pay from its own funds;

(e) Lessee shall (i) apply for or consent to the appointment of a receiver, trustee, custodian or liquidator of Lessee, or of all or a substantial part of the assets of Lessee, (ii) be unable, fail or admit in writing its inability generally to pay its debts as they become due, (iii) make a general assignment for the benefit of creditors, (iv) have an order for relief entered against it under applicable Federal bankruptcy law, or (v) file a voluntary petition in bankruptcy or a petition or an answer seeking reorganization or an arrangement with creditors or taking advantage of any insolvency law or any answer admitting the material allegations of a petition filed against Lessee in any bankruptcy, liquidation, readjustment, reorganization, moratorium or insolvency proceeding; or

(f) An order, judgment or decree shall be entered by any court of competent jurisdiction, approving a petition or appointing a receiver, trustee, custodian or liquidator for Lessee or of all or a substantial part of the assets of Lessee, in each case without its application, approval or consent, and such order, judgment or decree shall continue unstayed and in effect for any period of thirty (30) consecutive days.

Section 12.02. Remedies on Default. Whenever any Event of Default exists, Lessor shall have the right, at its sole option without any further demand or notice, to take one or any combination of the following remedial steps:

(a) By written notice to Lessee, Lessor may declare all Rental Payments payable by Lessee and other amounts payable by Lessee hereunder to the end of the then current Original Term or Renewal Term to be immediately due and payable;

(b) With or without terminating the Lease Term, Lessor may enter the premises where the Equipment is located and retake possession of such Equipment or require Lessee

at Lessee's expense to promptly return any or all of such Equipment to the possession of Lessor at such place within the United States as Lessor shall specify, and sell or lease such Equipment or, for the account of Lessee, sublease such Equipment, continuing to hold Lessee liable, but solely from legally available funds, for the difference between (i) the Rental Payments payable by Lessee and other amounts hereunder that are payable by Lessee to the end of the then current Original Term or Renewal Term, as the case may be, and (ii) the net proceeds of any such sale, leasing or subleasing (after deducting all expenses of Lessor in exercising its remedies hereunder, including without limitation all expenses of taking possession, storing, reconditioning and selling or leasing such Equipment and all brokerage, auctioneer's and attorney's fees), subject, however, to the provisions of Section 3.03 of this Agreement. The exercise of any such remedies respecting any such Event of Default shall not relieve Lessee of any other liabilities hereunder or with respect to the Equipment;

(c) Lessor may terminate the Escrow Agreement and apply any proceeds in the Escrow Account to the Rental Payments scheduled to be paid hereunder; and/or

(d) Lessor may take whatever action at law or in equity as may appear necessary or desirable to enforce its rights under this Agreement or the Escrow Agreement or as a secured party in any or all of the Equipment or the Escrow Account.

Section 12.03. No Remedy Exclusive. No remedy herein conferred upon or reserved to Lessor is intended to be exclusive and every such remedy shall be cumulative and shall be in addition to every other remedy given hereunder now or hereafter existing at law or in equity. No delay or omission to exercise any right or power accruing upon any default shall impair any such right or power or shall be construed to be a waiver thereof, but any such right or power may be exercised from time to time and as often as may be deemed expedient. In order to entitle Lessor to exercise any remedy reserved to it in this Article XII it shall not be necessary to give any notice other than such notice as may be required in this Article XII.

ARTICLE XIII

Section 13.01. Notices. All notices, certificates or other communications under this Agreement shall be sufficiently given and shall be deemed given when delivered or mailed by registered mail, postage prepaid, or delivered by overnight courier, or sent by facsimile transmission (with electronic confirmation) to the parties hereto at the addresses immediately after the signatures to this Agreement (or at such other address as either party hereto shall designate in writing to the other for notices to such party) and to any assignee at its address as it appears on the registration books maintained by Lessee.

Section 13.02. Binding Effect. This Agreement shall inure to the benefit of and shall be binding upon Lessor and Lessee and their respective successors and assigns.

Section 13.03. Severability. In the event any provision of this Agreement shall be held invalid or unenforceable by any court of competent jurisdiction, such holding shall not invalidate or render unenforceable any other provision hereof.

Section 13.04. Amendments, Changes and Modifications. This Agreement may only be amended by Lessor and Lessee in writing.

Section 13.05. Execution in Counterparts. This Agreement may be simultaneously executed in several counterparts, each of which shall be an original and all of which shall constitute but one and the same instrument; *provided,* that only Counterpart No. 1 of this Agreement shall constitute chattel paper for purposes of the applicable Uniform Commercial Code.

Section 13.06. Applicable Law; Venue; Waiver of Jury Trial. This Agreement shall be governed by and construed in accordance with the laws of the State. The parties hereto consent and submit to the jurisdiction of the State and venue in any state or Federal court of such State for the purposes of any suit, action or other proceeding arising in connection with this Agreement, and each party expressly waives any objections that it may have to the venue of such courts. The parties hereto expressly waive any right to trial by jury in any action brought on or with respect to this Agreement. If the waiver of jury trial contained herein is unenforceable for any reason, then the parties hereto agree that the court shall, and is hereby directed to, make a general reference pursuant to California Code of Civil Procedure Section 638 to a referee to hear and determine all of the issues in such action or proceeding (whether of fact or of law) and to report a statement of decision.

Section 13.07. Captions. The captions or headings in this Agreement are for convenience only and in no way define, limit or describe the scope or intent of any provisions or sections of this Agreement.

Section 13.08. No Advisory or Fiduciary Relationship. In connection with all aspects of each transaction contemplated by this Agreement (including in connection with any amendment, waiver or other modification hereof or of any other related document), the Lessee acknowledges and agrees that: (a) (i) the transactions regarding this Agreement provided by the Lessor and any affiliate thereof are arm's-length commercial transactions between the Lessee, on the one hand, and the Lessor and its affiliates, on the other hand, (ii) the Lessee has consulted its own legal, accounting, regulatory and tax advisors to the extent it has deemed appropriate, and (iii) the Lessee is capable of evaluating, and understands and accepts, the terms, risks and conditions of the transactions contemplated by this Agreement and by the other related documents; (b) (i) the Lessor and its affiliates each is and has been acting solely as a principal and, except as expressly agreed in writing by the relevant parties, has not been, is not, and will not be acting as an advisor, agent or fiduciary, for the Lessee, or any other person and (ii) neither the Lessor nor any of its affiliates has any obligation to the Lessee with respect to the transactions contemplated by this Agreement except those obligations expressly set forth herein and in the other related documents; and (c) the Lessor and its affiliates may be engaged in a broad range of transactions that involve interests that differ from those of the Lessee, and neither the Lessor nor any of its affiliates has any obligation to disclose any of such interests to the Lessee. To the fullest extent permitted by law, the Lessee, hereby waives and releases any claims that it may have against the Lessor or any of its affiliates with respect to any breach or alleged breach of agency or fiduciary duty in connection with any aspect of any transactions contemplated by this Agreement.

Section 13.09. Entire Agreement. The parties agree that this Agreement constitutes the final and entire agreement between the parties superseding all conflicting terms or provisions of any prior proposals, term sheets, solicitation documents, requests for proposals, award notices, approval letters or any other agreements or understandings between the parties.

Section 13.10. Electronic Signatures. The Related Documents may be executed and delivered by facsimile signature or other electronic or digital means (including, without limitation, Adobe's Portable Document Format (*"PDF"*)). Any such signature shall be of the same force and effect as an original signature, it being the express intent of the parties to create a valid and legally enforceable contract between them. The exchange and delivery of the Related Documents and the related signature pages via facsimile or as an attachment to electronic mail (including in PDF) shall constitute effective execution and delivery by the parties and may be used by the parties for all purposes. Notwithstanding the foregoing, at the request of either party, the parties hereto agree to exchange inked original replacement signature pages as soon thereafter as reasonably practicable.

[*Signature Page Follows*]

IN WITNESS WHEREOF, Lessor and Lessee have caused this Equipment Lease/Purchase Agreement to be executed in their names by their duly authorized representatives as of the date first above written.

LESSOR:	LESSEE:
BANC OF AMERICA PUBLIC CAPITAL CORP	CITY OF ESCONDIDO
11333 McCormick Road Hunt Valley II M/C MD5-032-07-05 Hunt Valley, MD 21031 Attention: Contract Administration Fax No.: (443) 541-3057	Escondido City Hall 201 North Broadway Escondido, CA 92025 Attention: Director of Finance Telephone: (760) 839-4880 Fax No.: _____ Email: Christina.Holmes@escondido.gov
By: _____ Name: _____ Title: _____	By: _____ Name: _____ Title: _____

Counterpart No. _____ of _____ manually executed and serially numbered counterparts. To the extent that this Agreement constitutes chattel paper (as defined in the applicable Uniform Commercial Code), no security interest or ownership herein may be created through the transfer or possession of any Counterpart other than Counterpart No. 1.

LIST OF EXHIBITS

EXHIBIT A	—	Form of Equipment Schedule
EXHIBIT B	—	Form of Payment Schedule
EXHIBIT C-1	—	Form of Authorizing Resolution
EXHIBIT C-2	—	Form of Incumbency and Authorization Certificate
EXHIBIT D	—	Form of Opinion of Lessee's Counsel
EXHIBIT E	—	Form of Final Acceptance Certificate
EXHIBIT F	—	Reserved
EXHIBIT G	—	Form of Acknowledgement and Disclaimer of Interests
EXHIBIT H	—	Form of Notice and Acknowledgement of Assignment
EXHIBIT I	—	Form of Escrow and Account Control Agreement

EXHIBIT A

EQUIPMENT SCHEDULE

Location of Equipment:

Equipment Description (Scope of Work):

EXHIBIT B

PAYMENT SCHEDULE

RENTAL PAYMENT DATE	RENTAL PAYMENT AMOUNT	INTEREST PORTION	PRINCIPAL PORTION	OUTSTANDING BALANCE	PREPAYMENT PRICE *(including prepayment premium, if any)*	CASUALTY VALUE *(including casualty premium, if any)*
8/28/25				$46,000,000.00		46,920,000.00
3/1/26	$1,722,828.83	$999,403.67	$723,425.16	45,276,574.84	NA	46,182,106.34
9/1/26	1,722,828.83	967,560.40	755,268.43	44,521,306.41	NA	45,411,732.54
3/1/27	1,722,828.83	951,420.32	771,408.51	43,749,897.90	NA	44,624,895.86
9/1/27	1,722,828.83	934,935.32	787,893.51	42,962,004.39	NA	43,821,244.48
3/1/28	1,722,828.83	918,098.03	804,730.80	42,157,273.59	NA	43,000,419.06
9/1/28	1,722,828.83	900,900.94	821,927.89	41,335,345.70	NA	42,162,052.61
3/1/29	1,722,828.83	883,336.34	839,492.49	40,495,853.21	$41,305,770.27	41,305,770.27
9/1/29	1,722,828.83	865,396.38	857,432.45	39,638,420.76	40,431,189.18	40,431,189.18
3/1/30	1,722,828.83	847,073.05	875,755.78	38,762,664.98	39,537,918.28	39,537,918.28
9/1/30	1,722,828.83	828,358.15	894,470.68	37,868,194.30	38,625,558.19	38,625,558.19
3/1/31	1,722,828.83	809,243.31	913,585.52	36,954,608.78	37,693,700.96	37,693,700.96
9/1/31	1,722,828.83	789,719.99	933,108.84	36,021,499.94	36,741,929.94	36,741,929.94
3/1/32	1,722,828.83	769,779.45	953,049.38	35,068,450.56	35,769,819.57	35,769,819.57
9/1/32	1,722,828.83	749,412.79	973,416.04	34,095,034.52	34,776,935.21	34,776,935.21
3/1/33	1,722,828.83	728,610.89	994,217.94	33,100,816.58	33,762,832.91	33,762,832.91
9/1/33	1,722,828.83	707,364.45	1,015,464.38	32,085,352.20	32,727,059.24	32,727,059.24
3/1/34	1,722,828.83	685,663.98	1,037,164.85	31,048,187.35	31,669,151.10	31,669,151.10
9/1/34	1,722,828.83	663,499.76	1,059,329.07	29,988,858.28	30,588,635.45	30,588,635.45
3/1/35	1,722,828.83	640,861.90	1,081,966.93	28,906,891.35	29,485,029.18	29,485,029.18
9/1/35	1,722,828.83	617,740.27	1,105,088.56	27,801,802.79	28,357,838.85	28,357,838.85
3/1/36	1,722,828.83	594,124.53	1,128,704.30	26,673,098.49	26,939,829.47	26,939,829.47
9/1/36	1,722,828.83	570,004.11	1,152,824.72	25,520,273.77	25,775,476.51	25,775,476.51
3/1/37	1,722,828.83	545,368.25	1,177,460.58	24,342,813.19	24,586,241.32	24,586,241.32
9/1/37	1,722,828.83	520,205.92	1,202,622.91	23,140,190.28	23,371,592.18	23,371,592.18
3/1/38	1,722,828.83	494,505.87	1,228,322.96	21,911,867.32	22,130,985.99	22,130,985.99
9/1/38	1,722,828.83	468,256.60	1,254,572.23	20,657,295.09	20,863,868.04	20,863,868.04
3/1/39	1,722,828.83	441,446.40	1,281,382.43	19,375,912.66	19,569,671.79	19,569,671.79
9/1/39	1,722,828.83	414,063.25	1,308,765.58	18,067,147.08	18,247,818.55	18,247,818.55
3/1/40	1,722,828.83	386,094.93	1,336,733.90	16,730,413.18	16,897,717.31	16,897,717.31
9/1/40	1,722,828.83	357,528.93	1,365,299.90	15,365,113.28	15,518,764.41	15,518,764.41
3/1/41	1,722,828.83	328,352.47	1,394,476.36	13,970,636.92	14,110,343.29	14,110,343.29
9/1/41	1,722,828.83	298,552.51	1,424,276.32	12,546,360.60	12,671,824.21	12,671,824.21
3/1/42	1,722,828.83	268,115.73	1,454,713.10	11,091,647.50	11,202,563.98	11,202,563.98

RENTAL PAYMENT DATE	RENTAL PAYMENT AMOUNT	INTEREST PORTION	PRINCIPAL PORTION	OUTSTANDING BALANCE	PREPAYMENT PRICE *(including prepayment premium, if any)*	CASUALTY VALUE *(including casualty premium, if any)*
9/1/42	1,722,828.83	237,028.51	1,485,800.32	9,605,847.18	9,701,905.65	9,701,905.65
3/1/43	1,722,828.83	205,276.95	1,517,551.88	8,088,295.30	8,169,178.25	8,169,178.25
9/1/43	1,722,828.83	172,846.87	1,549,981.96	6,538,313.34	6,603,696.47	6,603,696.47
3/1/44	1,722,828.83	139,723.76	1,583,105.07	4,955,208.27	5,004,760.35	5,004,760.35
9/1/44	1,722,828.83	105,892.80	1,616,936.03	3,338,272.24	3,371,654.96	3,371,654.96
3/1/45	1,722,828.83	71,338.88	1,651,489.95	1,686,782.29	1,703,650.11	1,703,650.11
9/1/45	1,722,828.83	36,046.54	1,686,782.29	-	-	-
TOTAL	$68,913,153.20	$22,913,153.20	$46,000,000.00			

Contract Rate. The Contract Rate is 4.274% per annum.

Prepayment Option Commencement Date. For purposes of Section 10.01 of the Agreement, the Prepayment Option Commencement Date is March 1, 2029.

LESSOR:	LESSEE:
BANC OF AMERICA PUBLIC CAPITAL CORP	CITY OF ESCONDIDO
By: _____	By: _____
Name: _____	Name: _____
Title: _____	Title: _____

EXHIBIT C-1

FORM OF AUTHORIZING RESOLUTION

A RESOLUTION OF THE GOVERNING BODY OF THE CITY OF ESCONDIDO AUTHORIZING THE EXECUTION AND DELIVERY OF AN EQUIPMENT LEASE/PURCHASE AGREEMENT WITH RESPECT TO THE ACQUISITION, FINANCING AND LEASING OF CERTAIN EQUIPMENT FOR THE PUBLIC BENEFIT WITHIN THE TERMS PROVIDED HEREIN; AUTHORIZING THE EXECUTION AND DELIVERY OF DOCUMENTS REQUIRED IN CONNECTION THEREWITH; AND AUTHORIZING THE TAKING OF ALL OTHER ACTIONS NECESSARY TO THE CONSUMMATION OF THE TRANSACTIONS CONTEMPLATED BY THIS RESOLUTION.

WHEREAS, the City of Escondido (the *"Lessee"*), a city duly organized and existing as a political subdivision, municipal corporation or similar public entity of the State of California, is authorized by the laws of the State of California to acquire, finance and lease personal property for the benefit of the Lessee and its inhabitants and to enter into contracts with respect thereto; and

WHEREAS, the Lessee desires to acquire, finance and lease certain equipment with a cost not to exceed $ _____ constituting personal property necessary for the Lessee to perform essential governmental functions (the *"Equipment"*); and

WHEREAS, in order to acquire such Equipment, the Lessee proposes to enter into that certain Equipment Lease/Purchase Agreement (the *"Agreement"*) with Banc of America Public Capital Corp (or one of its affiliates), as lessor, (the *"Lessor"*), the form of which has been presented to the governing body of the Lessee at this meeting; and

WHEREAS, the governing body of the Lessee deems it for the benefit of the Lessee and for the efficient and effective administration thereof to enter into the Agreement and the other documentation relating to the acquisition, financing and leasing of the Equipment to be therein described on the terms and conditions therein and herein provided;

NOW, THEREFORE, Be It And It Is Hereby Resolved by the governing body of the Lessee as follows:

Section 1. Findings and Determinations. It is hereby found and determined that the terms of the Agreement, in the form presented to the governing body of Lessee at this meeting, are in the best interests of the Lessee for the acquisition, financing and leasing of the Equipment.

Section 2. Approval of Documents. The form, terms and provisions of the Agreement are hereby approved in substantially the forms presented at this meeting, with such insertions, omissions and changes as shall be approved by the _____ **[insert title of officials]** of the Lessee or other members of the governing body of the Lessee executing (in writing or electronically) the same, the execution of such documents being conclusive evidence of such approval; and the _____ of the Lessee is hereby authorized and directed

to execute (in writing or electronically), and the _____ of the Lessee is hereby authorized and directed to attest, the Agreement and any related Exhibits attached thereto and to deliver the Agreement (including such Exhibits) to the respective parties thereto, and the _____ of the Lessee is hereby authorized to affix the seal of the Lessee to such documents.

Section 3. Other Actions Authorized. The officers and employees of the Lessee shall take all action necessary or reasonably required by the parties to the Agreement to carry out, give effect to and consummate the transactions contemplated thereby (including the execution (in writing or electronically) and delivery of a Final Acceptance Certificate, an Escrow Agreement, Disbursement Requests and any tax certificate and agreement, as contemplated in the Agreement) and to take all action necessary in conformity therewith, including, without limitation, the execution (in writing or electronically) and delivery of any closing and other documents required to be delivered in connection with the Agreement.

Section 4. No General Liability. Nothing contained in this Resolution, the Agreement, the Escrow Agreement nor any other instrument shall be construed with respect to the Lessee as incurring a pecuniary liability or charge upon the general credit of the Lessee or against its taxing power, nor shall the breach of any agreement contained in this Resolution, the Agreement, the Escrow Agreement or any other instrument or document executed in connection therewith impose any pecuniary liability upon the Lessee or any charge upon its general credit or against its taxing power, except to the extent that the Rental Payments payable under the Agreement are limited obligations of the Lessee, subject to annual appropriation, as provided in the Agreement.

Section 5. Appointment of Authorized Lessee Representatives. The _____ _____ and _____ of the Lessee are each hereby designated to act as authorized representatives of the Lessee for purposes of the Agreement and the Escrow Agreement until such time as the governing body of the Lessee shall designate any other or different authorized representative for purposes of the Agreement or the Escrow Agreement.

Section 6. Severability. If any section, paragraph, clause or provision of this Resolution shall for any reason be held to be invalid or unenforceable, the invalidity or unenforceability of such section, paragraph, clause or provision shall not affect any of the remaining provisions of this Resolution.

Section 7. Repealer. All bylaws, orders and resolutions or parts thereof, inconsistent herewith, are hereby repealed to the extent only of such inconsistency with respect to this Resolution. This repealer shall not be construed as reviving any bylaw, order, resolution or ordinance or part thereof.

Section 8. Effective Date. This Resolution shall be effective immediately upon its approval and adoption.

ADOPTED AND APPROVED by the governing body of the Lessee this _____ day of _____.

CITY OF ESCONDIDO, as Lessee

[SEAL]

By:_____
Printed Name: _____
Title: _____

Attest:

By:_____
Printed Name: _____
Title: _____

The undersigned, a duly elected or appointed and acting City Clerk of the Lessee identified in the above Resolution No. ___ (the *"Resolution"*), hereby certifies that the Resolution is a full, true and correct copy of such Resolution as adopted by the governing body of the Lessee on _____, 20__. The Resolution is in full force and effect on the date hereof and has not been amended, modified or otherwise changed by the governing body of the Lessee since the date of adoption of the Resolution.

Dated this ____ day of _____, 20__.

_____
Name: _____
Title: _____

EXHIBIT C-2

FORM OF INCUMBENCY AND AUTHORIZATION CERTIFICATE

The undersigned, a duly elected or appointed and acting City Clerk of the City of Escondido (*"Lessee"*) certifies as follows:

A. The following listed persons are duly elected or appointed and acting officials of Lessee (the *"Officials"*) in the capacity set forth opposite their respective names below and the facsimile signatures below are true and correct as of the date hereof;

B. The Officials are duly authorized, on behalf of Lessee, to negotiate, execute, in writing or electronically, and deliver the Equipment Lease/Purchase Agreement dated as of August 28, 2025 by and between Lessee and Banc of America Public Capital Corp (*"Lessor"*), the Escrow and Account Control Agreement dated as of August 28, 2025 by and among Lessor, Lessee and UMB Bank, National Association, as Escrow Agent, all documents related thereto and delivered in connection therewith, and any future modification(s) or amendments thereof (collectively, the *"Operative Agreements"*), and the Operative Agreements each are the binding and authorized agreements of Lessee, enforceable in all respects in accordance with their respective terms.

NAME OF OFFICIAL	TITLE	SIGNATURE
_____	_____	_____
_____	_____	_____
_____	_____	_____

Dated: August 28, 2025

By: _____
Name: _____
Title: _____

(The signer of this Certificate cannot be listed above as authorized to execute the Operative Agreements.)

EXHIBIT D

FORM OF OPINION OF COUNSEL TO LESSEE
(TO BE TYPED ON LETTERHEAD OF COUNSEL)

[Closing Date]

Banc of America Public Capital Corp
11333 McCormick Road
M/C MD5-032-07-05
Hunt Valley, MD 21031
Attn: Contract Administration

Re: Equipment Lease/Purchase Agreement,
dated as of August 28, 2025, by and between
Banc of America Public Capital Corp, as Lessor,
and the City of Escondido, as Lessee

Ladies and Gentlemen:

As legal counsel to the City of Escondido (*"Lessee"*), I have examined (a) an executed counterpart of that certain Equipment Lease/Purchase Agreement, dated as of August 28, 2025, and Exhibits thereto by and between Banc of America Public Capital Corp (*"Lessor"*) and Lessee (the *"Agreement"*), which, among other things, provides for the lease of certain property (the *"Equipment"*) and a certain Escrow and Account Control Agreement dated as of August 28, 2025 by and among Lessor, Lessee, and UMB Bank, National Association as Escrow Agent (the *"Escrow Agreement"*), (b) an executed counterpart of the ordinances or resolutions of Lessee with respect to authorization of the transaction contemplated by the Agreement, the Escrow Agreement and documents related thereto, and (c) such other opinions, documents and matters of law as I have deemed necessary in connection with the following opinions. The Agreement, the Escrow Agreement, and the documents relating thereto are herein collectively referred to as the *"Transaction Documents"*.

Based on the foregoing, I am of the following opinions:

1. Lessee is a city, duly organized and existing under the laws of the State, and is a political subdivision of the State within the meaning of Section 103(c) of the Internal Revenue Code of 1986, as amended (the *"Code"*) and the obligations of Lessee under the Agreement will constitute an obligation of Lessee within the meaning of Section 103(a) of the Code, notwithstanding Section 103(b) of the Code.

2. Lessee has the requisite power and authority to lease and acquire the Equipment and to execute and deliver the Transaction Documents and to perform its obligations under the Transaction Documents.

3. The Transaction Documents have been duly authorized, approved, executed and delivered by and on behalf of Lessee and the Transaction Documents are legal, valid and binding obligations of Lessee, enforceable against Lessee in accordance with their respective terms, except to the extent limited by state and federal law affecting creditor's remedies and by bankruptcy, reorganization, moratorium or other laws of general application relating to or affecting the enforcement of creditors' rights.

4. The authorization, approval, execution and delivery of the Transaction Documents and all other proceedings of Lessee relating to the transactions contemplated thereby have been performed in accordance with all open meeting laws, procurement and public bidding laws and all other applicable State or Federal laws.

5. There is no proceeding pending or threatened in any court or before any governmental authority or arbitration board or tribunal that, if adversely determined, would adversely affect the transactions contemplated by the Transaction Documents or the security interest of Lessor or its assigns, as the case may be, in the Equipment, the Escrow Account or other Collateral thereunder.

6. The portion of Rental Payments designated as interest is excluded from gross income for Federal income tax purposes under Section 103 of the Code and is exempt from State of California personal income taxes; and such interest is not a specific item of tax preference for purposes of the federal alternative minimum tax.

All capitalized terms herein shall have the same meanings as in the Transaction Documents unless otherwise provided herein. Lessor and its successors and assigns are entitled to rely on this opinion.

Sincerely,

EXHIBIT E

FORM OF FINAL ACCEPTANCE CERTIFICATE

Banc of America Public Capital Corp
11333 McCormick Road
M/C MD5-032-07-05
Hunt Valley, MD 21031
Attn: Contract Administration

Re: Equipment Lease/Purchase Agreement,
dated as of August 28, 2025, by and between
Banc of America Public Capital Corp, as Lessor,
and the City of Escondido, as Lessee

Ladies and Gentlemen:

In accordance with the above-referenced Equipment Lease/Purchase Agreement (the *"Agreement"*), the undersigned Lessee hereby certifies and represents to, and agrees with Lessor as follows:

1. All of the Equipment has been delivered, installed and accepted on the date hereof.

2. Lessee has conducted such inspection and/or testing of the Equipment as it deems necessary and appropriate and hereby acknowledges that it accepts the Equipment for all purposes.

3. Lessee is currently maintaining the insurance coverage required by Section 7.02 of the Agreement.

4. Lessee hereby reaffirms that the representations, warranties and covenants contained in the Agreement are true and correct as of the date hereof.

5. No event or condition that constitutes, or with notice or lapse of time, or both, would constitute, an Event of Default exists at the date hereof.

6. No Material Adverse Change has occurred since the date of the execution and delivery of the Agreement.

7. No Event of Non-appropriation has occurred or been threatened.

Capitalized terms used, but not defined, in this Final Acceptance Certificate shall have the same meanings as when such terms are used in the Agreement.

Date: _____-

LESSEE:

CITY OF ESCONDIDO

By:_____
Name: _____
Title: _____

(SEAL)

EXHIBIT F

RESERVED

EXHIBIT G

FORM OF ACKNOWLEDGEMENT AND DISCLAIMER OF INTERESTS

TO BE RECORDED AND WHEN RECORDED RETURN TO:
Banc of America Public Capital Corp
11333 McCormick Road
Hunt Valley II
M/C MD5-032-07-05
Hunt Valley, MD 21031
Attention: Contract Administration

ACKNOWLEDGMENT AND DISCLAIMER OF INTERESTS
DATED AS OF [_____]

Banc of America Public Capital Corp
Hunt Valley, MD

RE: Equipment Lease/Purchase Agreement (Escrow Account) dated as of August 28, 2025, between Banc of America Public Capital Corp and the City of Escondido

City of Escondido (with its successors and assigns, the *"Fee Owner"*), is the owner of the real estate commonly known as [_____] and described on Exhibit A attached hereto (the *"Real Property"*).

Fee Owner has previously located and installed and continues to operate, maintain and use certain property and equipment (collectively, the *"City Equipment"*) on the Real Property. Banc of America Public Capital Corp (with its successors and assigns, *"Secured Party"*) has previously extended credit to the Fee Owner that is secured by, among other things, the City Equipment.

The Fee Owner has entered into an Equipment Lease/Purchase Agreement dated as of August 28, 2025 (as amended or supplemented, the *"Financing Agreement"*), with the Secured Party for the financing of capital improvements, equipment and other property, together with all replacements, repairs, restorations, modifications and improvements thereof or thereto and all accessories, equipment, parts and appurtenances appertaining or attached to any of such equipment, and all substitutions, renewals, or replacements of and additions, improvements, accessions and accumulations to any and all of such equipment, together with all the rents, issues, income, profits, proceeds and avails therefrom (the *"Collateral"*), a portion of which is located upon the Real Property and a portion of which includes the City Equipment. The Secured Party has an exclusive first priority security interest constituting a first lien on such Collateral.

The Fee Owner desires to finance [_____] by issuing or entering into **[Describe lease/leaseback documents]** (the ***"[LRB/COPs Documents]"***) with

[Lessee/Sublessor/Authority] and **[Describe lease revenue bond or COPs documents]** with **[Trustee]**. [Payments under the **[LRB/COPs]** are insured by **[Bond Insurer].]** Section 6.03(b) of the Financing Agreement prohibits any mortgage, pledge, lien, security interest, charge or other encumbrance of any nature on or with respect to the Real Property, without a waiver of interest in the Collateral from a mortgagee or any other party having an interest in the Real Property, such waiver to be in form and substance satisfactory to the Secured Party. The Secured Party, as a condition to permitting the leasehold interest on the Real Property (excluding all Collateral) contemplated by the **[LRB/COPs Documents]**, requires that the **[Lessee/Sublessor/Authority]** and the **[Trustee/Bond Insurer]**[1] provide the waivers, disclaimers and further assurances set forth in this Acknowledgment and Disclaimer of Interests (this *"Disclaimer"*).

NOW, therefore, for good and sufficient consideration, receipt of which is hereby acknowledged, the Fee Owner, **[Lessee/Sublessor/Authority]** and the **[Trustee/Bond Insurer]** represent, acknowledge, covenant and agree to and for the benefit of the Secured Party as follows:

1. Each of the **[Lessee/Sublessor/Authority]** and the **[Trustee/Bond Insurer]** waives, disclaims, relinquishes and releases all interest in, right or claim to and lien on the Collateral, including, but not limited to, any right of levy or distraint upon the Collateral for rent.

2. Each of the **[Lessee/Sublessor/Authority]** and the **[Trustee/Bond Insurer]** acknowledges Secured Party's exclusive first priority security interest in the Collateral located on the Real Property. Each of the **[Lessee/Sublessor/Authority]** and the **[Trustee/Bond Insurer]** acknowledges and agrees that they have no right to remove or disturb any of the Collateral located on the Real Property. The Fee Owner (or Secured Party, to the extent permitted under the Financing Agreement) may from time to time, at its own expense, make additions, modifications and improvements to the Collateral (to the extent doing so complies with the terms of the Financing Agreement). Such additions, modifications and improvements to the Collateral shall remain the sole property of the Fee Owner (subject only to Secured Party's exclusive first priority security interest), and none of the **[Lessee/Sublessor/Authority]** and the **[Trustee/Bond Insurer]** shall have any interest therein. The Secured Party is granted the right of ingress and egress on the Real Property to inspect, use and/or remove the Collateral, and at any time may enter upon the Real Property to inspect, use and/or remove the Collateral located there without any liability whatsoever to the Secured Party, except for any damages to the Fee Owner's buildings or other improvements on the Real Property directly caused by the failure of the Secured Party to remove or use the Collateral with reasonable care.

3. Each of the **[Lessee/Sublessor/Authority]** and the **[Trustee/Bond Insurer]** agrees not to take any action to terminate the Fee Owner's right to occupy the Real Property under the **[LRB/COPs Documents]** without sixty (60) days prior written notice to the Secured Party.

---

1 Both Bond Insurer, if any, and Trustee should sign. If there is a Bond Insurer, Disclaimer should be revised to reference both entities throughout and additional signature block should be added.

4. Notwithstanding anything to the contrary in any agreement or instrument, and notwithstanding the means by which the Collateral may be attached or affixed to the Real Property, the Collateral shall be and remain equipment or other personal property and shall not be considered a fixture, a part of or affixed to the Real Property. Title to the Collateral shall vest in the Fee Owner, subject only to Secured Party's exclusive first priority security interest therein, and otherwise shall be controlled by the terms of the Financing Agreement.

5. The Fee Owner represents that other than the Secured Party's interests in the City Equipment and the proposed **[LRB/COPs Documents]**, no other lien, mortgage, hypothecation, encumbrance, security interest or other arrangement (including any financing arrangement or conditional sale or other encumbrance on title to real property or any financing lease having substantially the same economic effect as any of the foregoing) exists on, or is proposed or contemplated, with respect to the Real Property.

6. The Fee Owner agrees to notify any purchaser of the Real Property, or any party obtaining a mortgage or other lien on the Real Property, of this Disclaimer. Each of the **[Lessee/Sublessor/Authority]** and the **[Trustee/Bond Insurer]** agrees to notify any sublessee of the Real Property, or any party obtaining an interest in the leasehold interest in the Real Property under **[LRB/COPs Documents]**, of this Disclaimer. This Disclaimer shall be binding upon the successors and assigns of the Fee Owner, the **[Lessee/Sublessor/Authority]** and the **[Trustee/Bond Insurer]** and inure to the benefit of the Secured Party and its successors and assigns. The Fee Owner, the **[Lessee/Sublessor/Authority]** and the **[Trustee/Bond Insurer]** shall ensure that no other Person with any interest in the Real Property has any interest in, right or claim to and lien on the Collateral without Secured Party's prior written consent in its sole and absolute discretion. *"Person"* means any individual, corporation, not for profit corporation, partnership, limited liability company, joint venture, association, professional association, joint stock company, trust, unincorporated organization, government or any agency or political subdivision thereof or any other form of entity.

7. This Disclaimer shall be continuing, absolute and unconditional, with no act of any kind taken or not taken by any party at any time to affect or impair this Disclaimer. This Disclaimer shall remain in full force and effect until all obligations of the Fee Owner to the Secured Party created or existing have been fully paid and performed.

8. The Fee Owner is the fee simple owner of the Real Property and warrants that it has authority to execute and deliver this Disclaimer to the Secured Party. Each of the **[Lessee/Sublessor/Authority]** and the **[Trustee/Bond Insurer]** warrants that it has authority to execute and deliver this Disclaimer to the Secured Party.

9. This Disclaimer shall be governed by and construed under the laws of the State of California.

IN WITNESS WHEREOF, the parties hereto have caused this Acknowledgment and Disclaimer of Interests to be executed by its respective officer thereunto duly authorized, all as of the day and year first above written.

CITY OF ESCONDIDO, as Fee Owner

By:
Name: _____
Title: _____

[LESSEE/SUBLESSOR/AUTHORITY]

By:
Name: _____
Title: _____

[TRUSTEE/BOND INSURER][2]

By:
Name: _____
Title: _____

2 Both Bond Insurer, if any, and Trustee should sign. If there is a Bond Insurer, Disclaimer should be revised to reference both entities throughout and additional signature block should be added.

A notary public or other officer completing this certificate verifies only the identity of the individual who signed the document to which this certificate is attached, and not the truthfulness, accuracy, or validity of that document.

STATE OF _____)
) ss
COUNTY OF _____)

On _____ before me, _____, Notary Public, personally appeared _____ who proved to me on the basis of satisfactory evidence to be the person(s) whose name(s) is/are subscribed to the within instrument and acknowledged to me that he/she/they executed the same in his/her/their authorized capacity(ies), and that by his/her/their signature(s) on the instrument the person(s), or the entity upon behalf of which the person(s) acted, executed the instrument.

WITNESS my hand and official seal.

_____

[Seal]

A notary public or other officer completing this certificate verifies only the identity of the individual who signed the document to which this certificate is attached, and not the truthfulness, accuracy, or validity of that document.

STATE OF _____)
) ss
COUNTY OF _____)

On _____ before me, _____, Notary Public, personally appeared _____ who proved to me on the basis of satisfactory evidence to be the person(s) whose name(s) is/are subscribed to the within instrument and acknowledged to me that he/she/they executed the same in his/her/their authorized capacity(ies), and that by his/her/their signature(s) on the instrument the person(s), or the entity upon behalf of which the person(s) acted, executed the instrument.

WITNESS my hand and official seal.

_____

[Seal]

A notary public or other officer completing this certificate verifies only the identity of the individual who signed the document to which this certificate is attached, and not the truthfulness, accuracy, or validity of that document.

STATE OF _____)
) ss
COUNTY OF _____)

On _____ before me, _____, Notary Public, personally appeared _____ who proved to me on the basis of satisfactory evidence to be the person(s) whose name(s) is/are subscribed to the within instrument and acknowledged to me that he/she/they executed the same in his/her/their authorized capacity(ies), and that by his/her/their signature(s) on the instrument the person(s), or the entity upon behalf of which the person(s) acted, executed the instrument.

WITNESS my hand and official seal.

_____

[Seal]

A notary public or other officer completing this certificate verifies only the identity of the individual who signed the document to which this certificate is attached, and not the truthfulness, accuracy, or validity of that document.

STATE OF _____)
) ss
COUNTY OF _____)

On _____ before me, _____, Notary Public, personally appeared _____ who proved to me on the basis of satisfactory evidence to be the person(s) whose name(s) is/are subscribed to the within instrument and acknowledged to me that he/she/they executed the same in his/her/their authorized capacity(ies), and that by his/her/their signature(s) on the instrument the person(s), or the entity upon behalf of which the person(s) acted, executed the instrument.

WITNESS my hand and official seal.

_____

[Seal]

EXHIBIT A

DESCRIPTION OF THE REAL PROPERTY

The land referred to herein is situated in the State of California, and is more particularly described as follows:

EXHIBIT H

FORM OF NOTICE AND ACKNOWLEDGEMENT OF ASSIGNMENT

Dated _____

Banc of America Public Capital Corp (*"Assignor"*) hereby gives notice that it has assigned and sold to _____ (*"Assignee"*) all of Assignor's right, title and interest in, to and under the Equipment Lease/Purchase Agreement dated as of August 28, 2025 (the *"Agreement"*), by and between Assignor and the City of Escondido (*"Lessee"*), together with all exhibits, schedules, addenda and attachments related thereto, and all certifications and other documents delivered in connection therewith, the Rental Payments and other amounts due under the Agreement, all of Assignor's right, title and interest in the Equipment (as defined in the Agreement), and all of Assignor's right, title and interest in, to and under the Escrow and Account Control Agreement dated as of August 28, 2025 (the *"Escrow Agreement"*) by and among Lessee, Assignor and UMB Bank, National Association, as Escrow Agent, together with the Escrow Account and other Collateral (collectively, the *"Assigned Property"*). Each capitalized term used but not defined herein has the meaning set forth in the Agreement.

1. Lessee hereby acknowledges the effect of the assignment of the Assigned Property and absolutely and unconditionally agrees to deliver to Assignee all Rental Payments and other amounts coming due under the Agreement in accordance with the terms thereof on and after the date of this Acknowledgment.

2. Lessee hereby agrees that: (i) Assignee shall have all the rights of Lessor under the Agreement and all related documents, including, but not limited to, the rights to issue or receive all notices and reports, to give all consents or agreements to modifications thereto, to receive title to the Equipment in accordance with the terms of the Agreement, to declare a default and to exercise all rights and remedies thereunder in connection with the occurrence of an Event of Non-appropriation or an Event of Default; and (ii) **[except as provided in Section 3.03 of the Agreement,]** the obligations of Lessee to make Rental Payments and to perform and observe the other covenants and agreements contained in the Agreement shall be absolute and unconditional in all events without abatement, diminution, deduction, set-off or defense.

3. Lessee agrees that, as of the date of this Notice and Acknowledgment of Assignment (this *"Acknowledgement"*), the following information about the Agreement is true, accurate and complete:

Number of Rental Payments Remaining	_____
Amount of Each Rental Payment	$_____
Total Amount of Rental Payments Remaining	$_____
Frequency of Rental Payments	_____
Next Rental Payment Due	_____
Funds Remaining in Escrow Account	$_____

4. The Agreement remains in full force and effect, has not been amended, no Event of Default (or event which with the passage of time or the giving of notice or both would constitute an Event of Default) has occurred thereunder and no Event of Non-appropriation has occurred or is threatened with respect thereto.

5. Assignor hereby acknowledges the transfer restrictions imposed by Section 11.01 of the Agreement and confirms that the assignment to Assignee has been made in accordance with the provisions of that Section.

6. Any inquiries of Lessee related to the Agreement and any requests for disbursements from the Escrow Account, if applicable, and all Rental Payments and other amounts coming due pursuant to the Agreement on and after the date of this Acknowledgment should be remitted to Assignee at the following address (or such other address as provided to Lessee in writing from time to time by Assignee):

_____
_____
_____

ACKNOWLEDGED AND AGREED:

LESSEE: CITY OF ESCONDIDO

By:_____
Name: _____
Title: _____

ASSIGNOR: BANC OF AMERICA PUBLIC CAPITAL CORP

By:_____
Name: _____
Title: _____

EXHIBIT I

ESCROW AND ACCOUNT CONTROL AGREEMENT

See Item #4 in Transcript.

Docusign Envelope ID: 607B3453-3145-4431-9188-C2833DFB20BE

BUDGET ADJUSTMENT REQUEST

Department:	Finance	**For Finance Use Only**
Department Contact:	Christina Holmes	**BA #** _____
City Council Meeting Date: *(attach staff report)*	August 20, 2025	**Fiscal Year** _____

EXPLANATION OF REQUEST

Staff recommends that the City Council to adopt Resolution 2025-107 authorizing the Mayor to execute, on behalf of the City, the First Amendment to the Energy Services Agreement between the City and Climatec Energy Services ("Climatec"), and authorizing a lease-purchase agreement with an initial principal value of $46,000,000 through Bank of America to fund capital cost for the various projects included in the Energy Roadmap.

BUDGET ADJUSTMENT INFORMATION

Project/Account Description	Account Number	Amount of Increase	Amount of Decrease
Climatec Energy Project	New	$10,000,000	
General Fund Transfer from Workers Compensation Fund			5,525,480
Water Fund Transfer from Workers Compensation Fund			1,180,360
Wastewater Fund Transfer from Workers Compensation Fund			1,168,280
Measure I Local District Tax Fund			2,125,880

APPROVALS

Signed by: Christina Holmes C0C8E98A934247C...	8/12/2025	Signed by: Christina Holmes C0C8E98A934247C...	8/12/2025
DEPARTMENT HEAD	**DATE**	**FINANCE**	**DATE**

STAFF REPORT

August 20, 2025
File Number 0120-15

SUBJECT

PUBLIC ART WORK PLAN: FY 2024/2025 UPDATES AND FY 2025/2026 PUBLIC ART COMMISSION ANNUAL WORK PLAN

DEPARTMENT

Economic Development

RECOMMENDATION

Request the City Council adopt Resolution No. 2025-110 approving and adopting the FY 2025/2026 Public Art Commission Annual Work Plan.

Staff Recommendation: Approval (Economic Development: Jennifer Schoeneck, Director of Economic Development)

Presenter: Sandra Aguilar, Management Analyst

ESSENTIAL SERVICE– No

COUNCIL PRIORITY– Increase Retention and Attraction of People and Businesses to Escondido

FISCAL ANALYSIS

Funding for public art projects will continue through land development impact fees with no impact to the General Fund. The Public Art Commission is recommending a series of adjustments to existing project allocations within the Public Art Fund in the total amount of $370,000.

BACKGROUND

The public art program for the City of Escondido ("City") was first created in 1988 with the establishment of the Public Art Commission. Since then, the program has expanded significantly, enriching the community with art installations of various mediums, live performances, and art education programming.

On May 20, 2024, City Council adopted the City's first Public Art Strategic Plan and the FY 2024/2025 Annual Work Plan.

The Public Art Strategic Plan positions the City of Escondido as a leader in leveraging public art as a catalyst for economic development. By supporting the creative economy and enhancing the City's visual landscape, the plan strengthens Escondido's identity as a thriving arts community. The Annual Work Plan model provides a structured framework to guide public art initiatives in the years ahead.

CITY of ESCONDIDO

STAFF REPORT

Public Art Vision Statement

Escondido is a City where art, inspired by community, welcomes visitors and residents, creating a fun and lively environment that celebrates all things Escondido, heralding our past and manifesting our future.

The Annual Work Plan Overview

Each year the Public Art Commission will adopt an Annual Work Plan. This process begins by establishing a subcommittee which will be specifically responsible for recommending the projects, programs, and budgets that will be implemented in the coming fiscal year to the full commission. The Annual Work Plan will outline four key areas: new art solicitation, art education, maintenance, and deaccessioning.

- New Art Solicitation: To determine the art medium, location, theme/celebration, and funding amount.
- Art Education: Desired outcome of the program, people served, type of art education, and funding.
- Maintenance: Inventory of collection, identify necessary maintenance needs of art pieces, and funding source.
- Deaccessioning: Conduct a review of contracts, review maintenance records, conduct analysis of documents, and render final resolutions.

The Annual Work Plan will be proposed and approved by the Public Art Commission with final adoption by the City Council every fiscal year.

The Annual Work Plan Timeline

As outlined in the Public Art Strategic Plan, the intended timeline for developing the Annual Work Plan every year is as follows:

- January: The Public Art Commission will appoint 2-3 members to an Annual Work Plan Subcommittee.
- February – April: The subcommittee, with assistance from City staff, will develop the Annual Work Plan covering the four key areas: Art Solicitation, Art Education, Maintenance, and Deaccessioning.
- May: The Subcommittee via staff, will bring forth the proposed Annual Work Plan to the Public Art Commission for review and approval.

- July: The Annual Work Plan will be presented to City Council for review and adoption.
- August: The solicitation process begins for new artwork.
- October: Public input and final recommendations of artwork.
- November: The Public Art Commission will officially approve the final artwork and award funding.
- December: The staff will work administratively to complete the appropriate documents and requirements with the artists.
- January: Work on the projects may begin pending finalization of agreements with an estimated timeframe of approximately one year to complete the installation.

FY 2024/2025 Annual Work Plan Updates

Adoption of the Public Art Strategic Plan

The City of Escondido's first Public Art Strategic Plan was adopted by City Council on May 20, 2024.

Escondido's Public Art Strategic Plan received the 2024 Excellence in North County Economic Development Award, also known as a "Devvie", from the San Diego North Economic Development Council. This award recognizes policies and initiatives that contribute to a more economically competitive region.

Launched the online Public Art Maps and C.R.E.A.T.E Tool

Information on the City's current art collection is more readily accessible to visitors and the community. The current Public Art Collection has been digitally mapped with the name of the art piece, artist, year of installation and any other available information.

Integrated as part of the Public Art Maps, the C.R.E.A.T.E. tool allows for the community to add information on any piece of art located throughout the City. A postcard with a QR code to the Public Art Maps is available at front counters and distributed at outreach events.

Escondido celebrates April is Arts, Culture, and Creativity Month for the first time

The celebration began in California in 2019, established by the California Arts Council and advocacy groups to elevate the value of the arts statewide. In April 2025, Escondido officially celebrated April as Arts, Culture, and Creativity Month to recognize the vital role that the arts play in enriching the community, inspiring expression, and driving innovation. The celebration highlights the contributions of artists and cultural organizations while promoting access to creative experiences for all.

CITY of ESCONDIDO

STAFF REPORT

The Public Art Commission released a grant opportunity through which selected recipients could receive between $1,000-$7,000. Through a grant process open to all, funds were awarded to local businesses, artists, and non-profits to provide free art experiences to the community in the month of April. A total of 9 projects were selected and a total of $50,000 was awarded.

Partnership with Escondido Union High School entered a fourth year

The City of Escondido is currently in partnership with EUSHD to paint murals on the City-owned buildings in Washington Park. Every year, students learn the process of painting murals with the assistance of art teachers who donate their time. The murals are painted in the summer when the students are on summer break. The program has resulted in 6 murals painted on the buildings in the past four years. The painting of these student murals has instilled a sense of pride in the community, and to date, none have been vandalized.

Escondido Expressions reaches the 20th traffic signal boxes milestone

The Escondido Expression program gives stipends to artists to paint traffic signal boxes with various themes throughout the City of Escondido. Due to the guidance of the Public Art Strategic Plan, the first call for artists was held and the program doubled with 10 traffic signal boxes painted in the 2024-2025 fiscal year. The program allows for art to be painted in art deserts, areas without public art. All the designs for traffic signal boxes in the 2024-2025 fiscal year were released to the public for voting on their favorite choices at each location. The community could also submit comments, suggest themes, and nominate locations where they would like to see art.

Two New Public Murals

Bellas Rosas, by Charlie Mejia, replaced a mural that was degrading on the side of the Best Little Hair House business building located at 332 E. 2nd Avenue. The previous mural was more than 10 years old. The new mural is approximately 530 square feet.

Hummingbirds Jubilee, by Brenda Townsend, was installed on the side of the Tamales Jovita business building located at 158 W. Grand Avenue. This wall is highly visible and faces Maple Street Plaza. The artist painted the 1,400 square foot mural with the help of over 40 volunteers.

Dedicated Staff Assigned to Queen Califia's Magical Circle

A part-time staff member was hired in February 2025. Although funding from this position does not come from the Public Art funds, it is notable as this will allow for an expansion of art education and programming opportunities at Queen Califia. Since hiring, staff has developed volunteer docent materials, enhanced communication with volunteers, and played a key role in planning for the long-term care of the sculpture garden. Their presence also provides valuable flexibility allowing for coverage when volunteers are unavailable and enabling the coordination of additional private tours.

CITY of ESCONDIDO

STAFF REPORT

Investment in the Arts

The funds allocated to Public Art in FY 2024/2025 represented a strategic investment in Escondido's cultural and creative landscape. With a total of 16 new pieces added to the City's collection, the spending not only enriches public spaces but also supports local artists and contributes to the growth of the creative economy. This investment leveraged public art to attract visitors, stimulate local businesses, and enhance the overall economic vitality of Escondido.

FY 2025/2026 Annual Work Plan

On July 14, 2025, the Public Art Commission adopted the FY 2025/2026 Annual Work Plan. As previously defined, this Plan establishes projects for art solicitation, art education, art maintenance, and deaccessioning.

Art Solicitation

- Grand Avenue Roundabout Art Project
  Location: Roundabout at Grand Ave & Broadway with companion pieces throughout the City
  Theme: Authentically Escondido
  Timeline: August 2025 to June 2026

- Escondido Creek Trail
  Location: Installation of art along the creek trail of murals and sculpture(s)
  Theme: Flora & Fauna
  Timeline: September 2025 to June 2026

- Escondido Expressions (Traffic Signal Boxes)
  Location: Various locations throughout the City
  Theme: Varies by box
  Timeline: (Call for Artists 1) September 2025-December 2025, (Call for Artists 2) January 2026-June 2026

- Community Requests
  Location: Various locations throughout the City
  Theme: No assigned theme
  Timeline: All funds are for events and art taking place in FY 2025-2026

Art Education

- Art, Culture, & Creativity Month
  Grants for events and activities taking place in Escondido specific to Art, Culture, & Creativity Month in April 2026.

- EUHSD Student Murals
  Grant to support EUHSD art students who will install murals on City recreation facilities during June of 2026. This program promotes education and community engagement.

- Banner Program
  Light pole banners and street banners with artwork designed by students to attract visitors to Grand Avenue during April is Arts, Culture, and Creativity Month 2026 and celebrate art created in Escondido.

- Queen Califia Magical Circle Visitors Center
  A temporary Visitor Center will be installed near the Queen Califia space to serve as an educational hub and provide a welcoming environment for guests.

Art Maintenance

- None at this time
  Funds for Public Art are not allowed to be used for maintenance of existing art and other funding sources will need to be identified.

Deaccessioning (options)

- Mercado Grande Series
  The artist, Tama Dumlao, created 4 in-ground mosaics in 2011 which were installed at the four corners of the intersection of Grand and Center City. These mosaics have had no maintenance and have held up remarkable well with the exception of 1 tile. Due to being close to water and the highest foot traffic, the mosaic has sustained some damage. The Public Art Commission will explore options for repair or deaccessioning.

- Pillars of the Community
  Created by artist Wick Alexander in 2000, this series consisted of nine pillars in various parts of Escondido. Some pillars sustained significant damage or were completely destroyed due to vandalism or vehicle collision. The Public Art Commission will explore options for relocation or formal deaccessioning of those that no longer exist.

CITY of ESCONDIDO

STAFF REPORT

FY 2025/2026 Budget Adjustment

The Public Art Fund currently holds approximately $938K in various accounts, supporting a broad range of projects and programs. In the 2024/2025 fiscal year, $65,372.68 was spent. The substantial accumulation of funds enables the City to advance high-impact initiatives such as the Grand Avenue Roundabout Art Project and the Escondido Creek Trail Projects, both of which were budgeted for in FY 2024/2025 but lacked the necessary resources for implementation. The Public Art Commission is recommending a series of adjustments to existing project allocations within the fund in the total amount of $370,000.

Project Name	Balance	Public Art Commission Recommendation	New Balance
Escondido Creek Trail Art Project	$250,000.00	Increase Funding to expand project foot print	$310,000.00
Escondido Expressions	$15,627.00	No change	$15,627.00
Grand Avenue Roundabout Art Project	$500,000.00	Increase funding to add companion pieces	$550,000.00
Murals	$31,635.94	Remove and reallocate funding	$0
FY 24/25 Art, Culture, and Creativity Month	$0	Establish new account for FY 25/26 Art, Culture, and Creativity Month	$75,000.00
FY 24/25 Public Outreach	$9,932.57	Remove and reallocate funding	$0
FY 24/25 EUHSD Student Murals	$0	Establish a new account for FY 25/26 EUHSD Student Murals	$15,000.00

FY 2025/2026 Annual Work Plan Budget

The following outlines the proposed budget for the 2025/2026 Annual Work Plan. Due to a considerable increase of land development fees to be collected, the projected amount of incoming Public Art Funds for FY 25/26 is $399,680 allowing for an increase to many of the ongoing projects such as Escondido Creek Trail, Grand Avenue Roundabout Art Project, and the grants for April is Arts, Culture and Creativity month. The following is the budget after the budget adjustment.

CITY of ESCONDIDO

STAFF REPORT

Project Name	Project Description	FY 25/26 Budget
Escondido Creek Trail Art Project	Art projects along the Escondido Creek Trail	$310,000.00
Escondido Expressions	Traffic Signal Boxes throughout the City	$15,627.75
Grand Avenue Roundabout Art Project	Grand Avenue sculpture and companion pieces	$550,000.00
FY 25/26 Art, Culture, and Creativity Month	Events and activities during April 2026	$75,000.00
FY 25/26 Banner Program	Light pole and street banners with artwork	$20,000.00
FY 25/26 Community Requests	Art and event grants throughout the year	$550,000.00
FY 25/26 EUHSD Student Murals	Funding for EUHSD students to paint murals	$25,000.00
FY 25/26 Queen Califia's Magical Circle Visitor Center	Temporary structure to serve as education hub and visitor center near Queen Califia's Magic Circle.	$100,000.00
	Total FY 25/26 Budget	$1,135.627.75

RESOLUTIONS

a) Resolution No. 2025-110

ATTACHMENTS

a) Attachment "1"- Budget Adjustment

RESOLUTION NO. 2025-110

A RESOLUTION OF THE CITY COUNCIL OF THE CITY OF ESCONDIDO, CALIFORNIA, ADOPTING THE FY 2025/2026 PUBLIC ART COMMISSION ANNUAL WORK PLAN AND AUTHORIZING NECESSARY BUDGET ADJUSTMENTS

WHEREAS, art continues to play a transformative role in enhancing Escondido's public spaces, reinforcing a distinct cultural identity that fosters community pride and attracts regional visitors; and

WHEREAS, Escondido remains a City inspired by creativity and one that values the power of the arts to educate, unify, commemorate, and drive community connection; and

WHEREAS, the City's Public Art Program has contributed meaningfully to placemaking, community revitalization, and local economic activity; and

WHEREAS, as the Public Art Program is now integrated within the City's Economic Development Department, it is well positioned to support Escondido's creative economy, tourism initiatives, and broader economic goals; and

WHEREAS, the FY 2025/2026 Public Art Commission Annual Work Plan outlines a focused set of projects and initiatives aligned with community feedback, strategic city goals, and opportunities to leverage public and private partnerships; and

WHEREAS, this plan continues to serve as a foundation for arts and culture leadership, long-term investment, and thoughtful growth of creative infrastructure in Escondido.

NOW, THEREFORE, BE IT RESOLVED by the City Council of the City of Escondido, California, as follows:

1. That the above recitations are true.

2. That the City Council hereby adopts the FY 2025/2026 Public Art Commission Annual Work Plan.

3. That the City Council authorizes all necessary budget adjustments to implement the FY 2025/2026 Public Art Commission Annual Work Plan.

BUDGET ADJUSTMENT REQUEST

Department:	Economic Development	For Finance Use Only
Department Contact:	Jennifer Schoeneck	BA # _____
City Council Meeting Date: *(attach staff report)*	August 20, 2025	Fiscal Year _____

EXPLANATION OF REQUEST

Request the City Council adopt Resolution No. 2025-110, approving and adopting the Public Art Annual Work Plan for 2025/2026.

BUDGET ADJUSTMENT INFORMATION

Project/Account Description	Account Number	Amount of Increase	Amount of Decrease
City Murals	1130-PRJ-00000035		$31,635.94
FY24/25 Public Outreach	1130-PRJ-00000284		$9,932.57
Escondido Creek Art Project	1130-PRJ-00000039	$60,000	
Grand Avenue Roundabout Art Project	1130-PRJ-00000043	$50,000	
FY 25/26 Art, Culture, and Creativity Month	1130 – New Project	$75,000	
FY 25/26 Banner Program	1130 – New Project	$20,000	
FY 25/26 Community Requests	1130 – New Project	$50,000	
FY 25/26 EUHSD Student Murals	1130 – New Project	$15,000	
FY 25/26 Queen Califia's Magical Circle Visitor Center	1130 – New Project	$100,000	
Public Art Fund Balance	3050-1130		$328,431.49

APPROVALS

	8/13/25	Christina Holmes Christina Holmes (Aug 13, 2025 16:40:14 PDT)	13/08/2025
DEPARTMENT HEAD	**DATE**	**FINANCE**	**DATE**

CITY of ESCONDIDO

FUTURE AGENDA

8/27/2025

PROCLAMATION - Pollution Prevention Week

CONSENT CALENDAR - (K. MORGAN) - BID AWARD FOR ACTIVATED COAL BASE POWDER FOR THE WATER TREATMENT PLANT - It is requested that the City Council adopt Resolution No. 2025-108, authorizing the Finance Manager to execute a purchase order with Carbon activated Corporation, the only responsive bidder, to provide Activated Coal Base Powder to be used at the Water Treatment Plant.

CONSENT CALENDAR - (K. MORGAN) - CONTINUING REPAIR OF THE EMERGENCY REPAIR OF THE ESCONDIDO TRUNK SEWER MAIN - It is requested that the City Council adopt Resolution No. 2025-109 declaring that pursuant to the terms of Section 22050 of the California Public Contract Code, the City Council finds there is a need to continue the emergency repair of the Escondido Trunk Sewer Main. The resolution, which must be passed by four-fifths vote, also declares that public interest and necessity demand the immediate expenditure to safeguard life, health, or property.

PUBLIC HEARING - (K. MORGAN) - 2025 SANITARY SEWER MANAGEMENT PLAN - It is requested that the City Council receive and file the Utilities 2025 Sanitary Sewer Management Plan and accept public comment on the plan.

CURRENT BUSINESS - (Z. BECK) - COUNCIL FACILITY USE POLICY - Request the City Council adopt Resolution No. 2025-106 establishing a comprehensive City Council Facility Use Policy for Community Public Forums and Neighborhood Celebration Events.

9/3/2025 - NO MEETING (LABOR DAY)

9/10/2025 - CANCELLED