Revised 11/9/26

City of Capitola

Arts and Cultural Commission Meeting Agenda

Tuesday, November 10, 2026 – 6:30 PM

Council Chambers
420 Capitola Avenue, Capitola, CA 95010

Chair:	Mary Beth Cahalen
Vice Chair:	Karin Anderson
Commissioners:	Courtney Christiansen, Joe Clark, Enrique Dolmo Jr., Roy Holmberg, Roy Johnson, Jill Lengre, Esther Sylvan
Staff Representatives:	Nikki Bryant

1. **Call to Order and Roll Call**
2. **Additional Materials**

   A. Correspond received
3. **Public Oral and Written Communications**
   Public Oral Communications allows members of the public to address the Commission on any Program Report or topics within the purview of the Commission not on the General Business agenda.
4. **Commissioner Comments**
5. **Staff Comments**
6. **Approval of Minutes – Regular Meeting, October 13, 2026**
7. **Program/Committee Reports:** *All items in program and committee reports are staff or committee updates. Public Communication for these items is to be addressed during Public Oral Communication.*
8. **General Business:** *All items listed in General Business are intended to provide an opportunity for public discussion. The following procedure pertains to each General Business item 1) Staff explanation; 2) Commission Questions; 3) Public Comment; 4) Commission deliberations; 5) Decision.*

   A. New Commissioner Applicants
   Review the new commissioner applications and recommend an appointment to the City Council for consideration at its January appointment meeting.

   B. Feedback on Village Signs
   Accept presentation and provide feedback to staff on signage concept.

   C. Rispin Reflecting Pool Mosaic Public Art Project
   Review the Rispin Reflecting Pool Public Art Project artist selection process and provide direction to staff regarding next steps, including whether to proceed with the ad hoc committee's recommendation or reissue the Call to Artist.

9. **Adjournment:** The next regular Art & Cultural Commission meeting is on December 8, 2026.

Agenda and Agenda Packet Materials: *The Arts and Cultural Commission Agenda is available on the City's website www.cityofcapitola.gov on Friday prior to the Tuesday meeting. If you need additional information, please contact the City Hall Department at (831) 475-7300.*

Americans with Disabilities Act*: Disability-related aids or services are available to enable persons with a disability to participate in this meeting consistent with the Federal Americans with Disabilities Act of 1990. Assisted listening devices are available for individuals with hearing impairments at the meeting in the City Council Chambers. Should you require special accommodations to participate in the meeting due to a disability, please contact the Community Development Department at least 24 hours in advance of the meeting at (831) 475-7300. In an effort to accommodate individuals with environmental sensitivities, attendees are requested to refrain from wearing perfumes and other scented products.*

Appeals: *Any person who believes that a final action of this advisory body has been taken in error may appeal decision to City Council. Appeals must be in writing and delivered to the City Clerk's Office within ten (10) working days from the time of the board's decisions. The notice of appeal shall set forth appellant's name, phone number, address to which notices may be sent to the appellant, and the grounds upon which the appeal is made.*

Outlook

FW: November 10, 2026 Art & Cultural Commission agenda

From Mashburn, Morgan <mmashburn@cityofcapitola.gov>
Date Mon 11/9/2026 4:04 PM
To Wyatt, Rosie <rwyatt@cityofcapitola.gov>

Morgan Mashburn
Office Coordinator
831.475.5935

From: The Art Of Life <wow@theartoflife.com>
Sent: Monday, November 9, 2026 1:02 PM
To: Bryant, Nikki <nbryant@cityofcapitola.gov>; Mashburn, Morgan <mmashburn@cityofcapitola.gov>
Cc: Art and Cultural <ArtandCultural@cityofcapitola.gov>
Subject: Re: November 10, 2026 Art & Cultural Commission agenda

Hi Nikki,

Thank you for the link. We will not be attending.

We have reviewed the minutes of the Committee's October 13th meeting, and we have serious concerns about both the Committee's decision-making and the integrity of the selection process.

We approached this commission with enthusiasm and a genuine commitment to creating something extraordinary for the community. We submitted a thoughtful, comprehensive design that addressed every element requested in the original Call, proposing to transform the entire reflecting pool into a cohesive, permanent mosaic artwork. We offered Capitola an opportunity to acquire an exceptional work of public art for Rispin Park, and did so at a fee considerably below what we would ordinarily charge for a project of this scope.

At our September 8th presentation, our proposal received nearly unanimous support. Subsequently, we were informed that the Ad Hoc Committee was recommending us for the commission. Rather than moving forward with that recommendation, however, certain members of the Committee began looking for ways to "keep the money in Capitola."

Suddenly, our travel expenses became a point of concern, despite the fact that they were legitimate project costs, fully disclosed in our original proposal. If the City enters into a contract with us to create

this artwork, those expenses are simply part of the cost of executing the project. They should not b confused with, or weighed against, the artistic merit and value of the proposed work.

It is deeply disappointing to find ourselves in a process that increasingly appears to be driven by considerations other than artistic merit and the quality of the proposals submitted. The original Call was open to artists regardless of geographic location. We participated in good faith under those published conditions, only to find that the possibility of restricting eligibility to local artists is now being entertained after proposals have been submitted and evaluated. We find this particularly troubling.

After considerable thought, we have decided that we no longer wish to participate in this process. We entered this competition in good faith, expecting a fair and merit-based evaluation of the proposals. Given the direction things have taken, we no longer have confidence in the integrity of that process.

Accordingly, we are formally withdrawing our proposal and respectfully request that it be removed from further consideration for this commission.

We regret that circumstances have brought us to this decision. We remain proud of the work we submitted and confident in the artistic merit of our proposal.

Sincerely,

Charles C. Clear III & Bonnie Lee Turner
The Art of Life

On 11/4/2026 6:05 PM, Bryant, Nikki wrote:

> Greetings,
> https://mccmeetings.blob.core.usgovcloudapi.net/capitolaca-pubu/MEET-Packet-fbc61049cb864dbb8d16f0dbd13d3a46.pdf
> Here is the link to the Art and Cultural Agenda for November 10, 2026. This meeting will be in Council Chambers.
>
> Thanks,
>
> Nikki Bryant
> She/Her
> City of Capitola
> Director of Community Services & Recreation
> 831-475-5935
> nbryant@cityofcapitola.gov

Virus-free.www.avast.com

City of Capitola
Art & Cultural Commission: Draft Minutes
Tuesday, October 13, 2026 – 6:30 PM

Community Room
420 Capitola Avenue, Capitola CA 95010

Chair: Mary Beth Cahalen
Vice Chair: Karin Anderson
Commissioners: Courtney Christiansen, Councilmember Joe Clarke, Enrique Dolmo Jr., Roy Holmberg, Roy Johnson, Jill Lengre, Esther Sylvan
Staff Representatives: Nikki Bryant

---

1. **Call to Order:**
   The meeting was called to order at 6:32 PM. In attendance: Anderson, Christinsen (6:43), Cahalen, Clarke, Dolmo, Holmberg, Johnson, Lengre, Sylvan,
2. **Additional Materials**
   None
3. **Public Oral Communication**
   None
4. **Commissioner Comments**
   Chair Cahalen commented on upcoming BIA events
5. **Staff Comments**
   At the November meeting, Morgan will be staffing the meeting due to work conference
   Medical Leave for Jaquelyn
   Clerk's office opening recruitment for commissioner applications
6. **Approval of Minutes- September 8, 2026**
   Motion to approve the Minutes: Councilmember Clarke
   Second: Commissioner Holmberg
   Voting Yea: Vice Chair Anderson, Commissioner Christinsen, Chair Cahalen, Councilmember Clarke, Commissioner Dolmo, Commissioner Holmberg, Commissioner Johnson, Commissioner Lengre, Commissioner Sylvan
7. **Program/Committee Reports**
   Plein Air: Informed of staff leave of absence and plan for staffing. Will be recruiting volunteers.
8. **General Business**
   a. **Rispin Reflection Pool Public Art Project**
      Report given by Staff. Councilmember Clarke commented on the travel portion of the budget for someone not local. Chair Cahalen commented on planned budget and artist use of funds. Commissioner Lengre commented the budget can be used however the artist sees fit as long as the quality is what we expected. Chair Cahalen suggested requesting a sample from each artist. Commissioner Holmberg commented on the exclusion of travel funds and no preference for local artist. Commissioner Johnson commented that the preference of concept was determined because of the concept and area covered.

Commissioner Johnson commented on the public painting rocks as part of the project. Commissioner Christinsen commented on each artist providing original and the concepts provided are generated renderings.
Public Comment: Mile Matthews, Alan Cable
Motion to approve staff provide feedback to The Art of Life and Miles Matthews and request each artist revise concept with drain location, and provide 12”x 12”sample of work: Councilmember Clarke
Second: Commissioner Johnson
Voting Yea: Vice Chair Anderson, Chair Cahalen, Councilmember Clarke, Commissioner Dolmo, Commissioner Johnson, Commissioner Lengre, Commissioner Sylvan.
Voting No: Commissioner Christinsen, Commissioner Holmberg

b. Bandstand Weathervane Public Art Project

Report given by Staff. Commissioner Holmberg commented on requesting the artist to revise the concept with an osprey and revised budget. Commissioner Lengre clarified the process for selection and recommendation to Council. Chair Cahalen commented on the other artwork in Esplanade Park and possible concepts the artist might propose considering the Surfer Statue that will be installed.
Public Comment: Alan Cable
Motion to approve providing feedback to artist Thomas Nawrocki and request a revised concept for osprey and inquire about other concepts that might fit within the Esplanade: Chair Cahalen
Second: Vice Chair Anderson
Voting Yea: Vice Chair Anderson, Commissioner Christinsen, Chair Cahalen, Councilmember Clarke, Commissioner Dolmo, Commissioner Holmberg, Commissioner Johnson, Commissioner Lengre, Commissioner Sylvan.

9. Adjournment

The meeting was adjourned at 7:53 PM to the next regular Art & Cultural Commission meeting on November 10, 2026.

ATTEST:

_____

Nikki Bryant

Art & Cultural Commission

Agenda Report

Meeting: November 10, 2026

From: Community Services & Recreation Department

Subject: New Commissioner applications

Recommended Action: Review the new commissioner applications and recommend an appointment to the City Council for consideration at its January appointment meeting.

Background: The Capitola Municipal Code establishes the Art & Cultural Commission as a nine-member commission consisting of one City Council member, one Planning Commissioner, one Artist or Arts Organization Representative, one Arts Professional, and five at-large members. The Artist or Arts Organization Representative, Arts Professional, and at-large members are appointed by a majority vote of the City Council. Commissioners serve two-year terms.

The Commission's Bylaws provide that members do not need to be residents of Capitola. The Bylaws further establish the application and recommendation process, requiring applicants to attend a minimum of one Commission meeting and conference with the Chair and Commissioner(s) regarding the obligations and duties of serving as a commissioner prior to receiving approval for appointment. Following that process, the Chair forwards the Commission's recommendation to the City Clerk/Mayor for consideration by the City Council.

The City Clerk's Office has opened an application period for individuals interested in serving on City boards and commissions. Appointments by the City Council are anticipated to occur in January.

Discussion: The City Clerk's Office has received six (6) applications for an new Art & Cultural Commissioners. The applicants will attend the Commission meeting and meet with the Commission regarding the duties and responsibilities of serving as an Art & Cultural Commissioner. Following the discussion, the Commission may recommend the applicants for appointment by the City Council.

The Art & Cultural Commission is responsible for advising the City Council on matters related to the arts and cultural programs of the City, including public art, arts programming, and implementation of the City's established arts and cultural policies and practices.

Fiscal Impact: There is no fiscal impact associated with reviewing the commissioner's application or making a recommendation to the City Council. Commissioners serve without compensation.

Attachments:

1. Commissioner application from Lisa Rupp
2. Commissioner application from Summer Estrella
3. Commissioner application from John Mulry
4. Commissioner application from Gerri Alaniz
5. Commissioner application from Diane Walton
6. Commissioner application from Sonia Leclerc

Alignment with 2025-2029 Strategic Plan Priority: Accountable Government

Report Prepared By: Nikki Bryant; Community Services & Recreation Director

Boards and Commissions Application

Thank you for your interest in serving on a City of Capitola Advisory Group. Please fill out the following form with your information. Appointments are made at a public City Council meeting.

Application For:

Application For:

- [x] Art and Cultural Commission - Artist
- [ ] Art and Cultural Commission - Arts Professional
- [ ] Art and Cultural Commission - At Large
- [ ] Capitola Village and Wharf Business Improvement Area Advisory Committee
- [ ] Commission on the Environment
- [ ] Finance Advisory Committee - At Large
- [ ] Finance Advisory Committee - Business Representative
- [ ] Historical Museum Board
- [ ] Planning Commission
- [ ] Other:

Applicant Information

First Name *

Lisa

Last Name *

Rupp

Email *

[redacted]

Current Address *

Street Address

[redacted]

Address Line 2

City

Capitola

State / Province / Region

CA

Postal / Zip Code

95010

Country

USA

Telephone (Home)

Telephone (Mobile) *

[redacted]

Are you a Capitola resident? *

Yes

Residential Neighborhood:

Riverview Terrace

Are you applying as a Youth Member to an Advisory Group? *

No

Youth Members are encouraged to participate with City Boards, Committees, and Commissions.

Qualifications

Occupation:

Self Employed- Sereia Design & Consulting

Please describe your qualifications and interest in serving on this Board/Commission/Committee: *

I have been an artist for decades, working in the apparel design and manufacturing business for 20+ years, and owning my own arts based business for 3+ years. I have lived in Capitola for 16+ years and have been an active participant in arts festivals while owning by business through Capitola Art & Wine Festival, markets at the Esplanade, and teaching summer sewing camps through Capitola Parks and Recreation. I care about arts in our community for all ages, and am hoping to be able to help continue to make it better for both the artists and the community we share our creations with.

Additional Attachments

LisaRupp_resume.docx 21.4KB

Acknowledgement Required *

Please note that appointment to this position may require you to file a conflict of interest disclosure statement or complete additional trainings with the City Clerk. This information is a public record and these statements are available to the public on request.

☑ Acknowledged

Signature *

All information contained in this page is public data and will be made available for public review upon request. Qualifications and interests of applicants will be provided to the City Council in a public forum and will be reviewed before appointments are made. Questions regarding this application and appointment process should be directed to the Capitola City Clerk.

Lisa Rupp

Lisa Rupp
[redacted]
Capitola, CA 95010
[redacted]
Email: [redacted]

Sereia Design & Consulting, Current — Capitola CA
Owner
Product
-Design, Develop & Create custom products to be sold at local and regional markets and online website (www.sereiadesign.com)
Education
Private and group setting sewing lessons. Working with Santa Cruz Parks and Recreation, Capitola Parks and Recreation to host after school and summer sewing camps. Working with Ocean Grove home school developing students sewing and patternmaking classes for both extracurricular and high school units.
Consulting
- Consulting needs for outside organizations including but not limited to process, calendar systems, freelance design, patternmaking

NHS-INC, Nov. 2006- June 2, 2023 — Santa Cruz CA
Director of Apparel
- Build division vision, and lead execution through responsive global product architecture delivering on long-range growth plans
- Collaborate cross functionally with brands and lead creatives to create compelling product offerings with high return investments
- Shape long range strategies to properly resource all projects under Apparel Division umbrella ensuring top quality launch to market
- Cultivate relationships with all division leads, cross-functional partners, customers, and worldwide counterparts
- Track and deliver data-driven qualitative and quantitative product performance feedback
- Identify customer and market opportunities, informed by customer needs, cultural influences, trends, and competitor and marketplace intelligence
- Set standards and manage all product costing continually increasing GM% through negotiations and costing analysis across competitors
- Oversee 3 branches of the Apparel Division keeping Design, Product Development and Purchasing on strategy delivering needs for company growth
- Recruit, train, mentor and motivate direct employees
Apparel Department Manager
- Manage the growing team of Designers, Developers and Purchasing Agents for all aspects of seasonal line creation
- - Create annual sales forecast for company apparel sales across all brands and categories
- Create annual Apparel Department budget
Merchandiser
- Develop seasonal strategies and build assortment plans per season for all apparel brands through research of prior sales history, selling trends, sales and buyer feedback and brand direction.
- Research seasonal apparel and color trends for designers at the start of each season.
- Maintain calendar adherence
- Oversee line lists for all brands, create master lists for catalog development and collaborate directly with creative team to ensure all necessary information for styles are included in catalogs.
- Set wholesale prices per season and target costing for development to achieve gross margin goals.
Product Developer
- Develop CNS woven tops, jackets, and accessories/novelties and printables
- Create, communicate, and coordinate all necessary information internally and externally for development and production
- Negotiate costing for all developed styles to realize set target costing and GM%
- - Manage special make-up programs for key account sales, creative team, and production

Brody & Cole, 2009-2013 — Scotts Valley CA
Freelance Patternmaker/Designer

FOX RACING, Late Summer/Fall 2006 — Morgan Hill CA
Production Manager

UCSC Shakespeare Santa Cruz, Summer/Fall 2005-Summer 2006 Santa Cruz CA
First Hand Shopper/Stitcher

Sessions, 2001-2004 Scotts Valley CA
Product Manager
Design Technician

Education:	**Skills:**
West Valley College, Saratoga CA - AA Liberal Arts - AS Apparel Design Advanced - AS Apparel Production - Certificate in Electronic Patternmaking (Gerber Technology) - Certificate in Electronic Marking and Grading (Gerber Technology)	- Word - Excel - Illustrator - Asana - Paving The Way PLM system

Boards and Commissions Application

Thank you for your interest in serving on a City of Capitola Advisory Group. Please fill out the following form with your information. Appointments are made at a public City Council meeting.

Application For:

Application For:

- [ ] Art and Cultural Commission - Artist
- [ ] Art and Cultural Commission - Arts Professional
- [x] Art and Cultural Commission - At Large
- [ ] Capitola Village and Wharf Business Improvement Area Advisory Committee
- [ ] Commission on the Environment
- [ ] Finance Advisory Committee - At Large
- [ ] Finance Advisory Committee - Business Representative
- [ ] Historical Museum Board
- [ ] Planning Commission
- [ ] Other:

Applicant Information

First Name *

Summer

Last Name *

Estrella

Email *

[redacted]

Current Address *

Street Address

[redacted]

Address Line 2

[redacted]

City

CAPITOLA

State / Province / Region

CA

Postal / Zip Code

95010

Country

United States

Telephone (Home)

[redacted]

Telephone (Mobile) *

[redacted]

Are you a Capitola resident? *

Yes

Residential Neighborhood:

Loma Vista Estates

Are you applying as a Youth Member to an Advisory Group? *

No

Youth Members are encouraged to participate with City Boards, Committees, and Commissions.

Qualifications

Occupation:

Retired Educator

Please describe your qualifications and interest in serving on this Board/Commission/Committee: *

I am a credentialed teacher in the state and have focused on teaching Yoga, Art and Music for most of my professional career. My passion is to bring the arts to people who may not always have access to it, and as a resident of Capitola for the past ten years, I have seen what a great job the Art and Cultural Committee is doing to celebrate the arts here. I would eagerly welcome a chance to serve my community in this way.
My husband Oscar Estrella performs frequently on the Capitola stage (with his band Santa Cruz Latin Collective) and we recently wrote a song together about Capitola and how we came to live here, which he performed last month at the Wednesday concert. We are both so happy to call this place home.

Additional Attachments

Acknowledgement Required *

Please note that appointment to this position may require you to file a conflict of interest disclosure statement or complete additional trainings with the City Clerk. This information is a public record and these statements are available to the public on request.

☑ Acknowledged

Signature *

All information contained in this page is public data and will be made available for public review upon request. Qualifications and interests of applicants will be provided to the City Council in a public forum and will be reviewed before appointments are made. Questions regarding this application and appointment process should be directed to the Capitola City Clerk.

Summer Ainsworth Estrella

Boards and Commissions Application

Thank you for your interest in serving on a City of Capitola Advisory Group. Please fill out the following form with your information. Appointments are made at a public City Council meeting.

Application For:

Application For:

- [ ] Art and Cultural Commission - Artist
- [ ] Art and Cultural Commission - Arts Professional
- [x] Art and Cultural Commission - At Large
- [x] Capitola Village and Wharf Business Improvement Area Advisory Committee
- [ ] Commission on the Environment
- [x] Finance Advisory Committee - At Large
- [ ] Finance Advisory Committee - Business Representative
- [ ] Historical Museum Board
- [x] Planning Commission
- [ ] Other:

Applicant Information

First Name *

John

Last Name *

Mulry

Email *

[redacted]

Current Address *

Street Address

[redacted]

Address Line 2

City

Capitola

State / Province / Region

CA

Postal / Zip Code

95010

Country

United States

Telephone (Home)

[redacted]

Telephone (Mobile) *

[redacted]

Are you a Capitola resident? *

Yes

Residential Neighborhood:

Depot Hill

Are you applying as a Youth Member to an Advisory Group? *

No

Youth Members are encouraged to participate with City Boards, Committees, and Commissions.

Qualifications

Occupation:

Father

Please describe your qualifications and interest in serving on this Board/Commission/Committee: *

Founded and lead the largest and most effective housing and transit nonprofit network in county. Relationships with state and federal politicians. A deep love for our city. I'm pretty good with budgets and navigating government funding processes too.

Additional Attachments

Acknowledgement Required *

Please note that appointment to this position may require you to file a conflict of interest disclosure statement or complete additional trainings with the City Clerk. This information is a public record and these statements are available to the public on request.

☑ Acknowledged

Signature *

All information contained in this page is public data and will be made available for public review upon request. Qualifications and interests of applicants will be provided to the City Council in a public forum and will be reviewed before appointments are made. Questions regarding this application and appointment process should be directed to the Capitola City Clerk.



Boards and Commissions Application

Thank you for your interest in serving on a City of Capitola Advisory Group. Please fill out the following form with your information. Appointments are made at a public City Council meeting.

Application For:

Application For:

- [ ] Art and Cultural Commission - Artist
- [ ] Art and Cultural Commission - Arts Professional
- [x] Art and Cultural Commission - At Large
- [x] Capitola Village and Wharf Business Improvement Area Advisory Committee
- [ ] Commission on the Environment
- [ ] Finance Advisory Committee - At Large
- [ ] Finance Advisory Committee - Business Representative
- [x] Historical Museum Board
- [ ] Planning Commission
- [ ] Other:

Applicant Information

First Name *

Gerri

Last Name *

Alaniz

Email *

[redacted]

Current Address *

Street Address

[redacted]

Address Line 2

City

Capitola

State / Province / Region

California

Postal / Zip Code

95010

Country

Santa Cruz

Telephone (Home)

Telephone (Mobile) *

[redacted]

Are you a Capitola resident? *

Yes

Residential Neighborhood:

Depot Hill

Are you applying as a Youth Member to an Advisory Group? *

No

Youth Members are encouraged to participate with City Boards, Committees, and Commissions.

Qualifications

Occupation:

Retired

Please describe your qualifications and interest in serving on this Board/Commission/Committee: *

I am an experienced administrative and sales professional with a background in executive support, hospitality management, retail leadership, advertising sales, and small business development. Core skills include telephone communication and customer relations, sales calls, and lead generation. As a founding member of Alaniz Marketing, I generated sales leads, and in my role as Alaniz's Community Relations Ambassador, I was responsible for business development. I was responsible for Alaniz's presence in the San Francisco Bay Area communities and fostered relationships with many charities and organizations in the area. I live in Capitola and want to give back to the community that I love.

Additional Attachments

Acknowledgement Required *

Please note that appointment to this position may require you to file a conflict of interest disclosure statement or complete additional trainings with the City Clerk. This information is a public record and these statements are available to the public on request.

☑ Acknowledged

Signature *

All information contained in this page is public data and will be made available for public review upon request. Qualifications and interests of applicants will be provided to the City Council in a public forum and will be reviewed before appointments are made. Questions regarding this application and appointment process should be directed to the Capitola City Clerk.

Gerri Alaniz

Boards and Commissions Application

Thank you for your interest in serving on a City of Capitola Advisory Group. Please fill out the following form with your information. Appointments are made at a public City Council meeting.

Application For:

Application For:

- [ ] Art and Cultural Commission - Artist
- [ ] Art and Cultural Commission - Arts Professional
- [x] Art and Cultural Commission - At Large
- [ ] Capitola Village and Wharf Business Improvement Area Advisory Committee
- [ ] Commission on the Environment
- [ ] Finance Advisory Committee - At Large
- [ ] Finance Advisory Committee - Business Representative
- [x] Historical Museum Board
- [ ] Planning Commission
- [ ] Other:

Applicant Information

First Name *

Diane

Last Name *

Walton

Email *

[redacted]

Current Address *

Street Address

[redacted]

Address Line 2

City

Capitola

State / Province / Region

Ca

Postal / Zip Code

95010

Country

Usa

Telephone (Home)

Telephone (Mobile) *

[redacted]

Are you a Capitola resident? *

Yes

Residential Neighborhood:

Depot Hill

Are you applying as a Youth Member to an Advisory Group? *

No

Youth Members are encouraged to participate with City Boards, Committees, and Commissions.

Qualifications

Occupation:

Retired

Please describe your qualifications and interest in serving on this Board/Commission/Committee: *

I am interested in the power of place, and the value of storytelling.
We moved to Capitola when i was 3, in 1953. We left in 1960 but returned and i graduated from Soquel HS in 1968, and UCSC in 1973 (history). Ive returned again and would like to give back. I am currently the President of the Dolphin Swimming & Boating Foundation in San Francisco and On the Baykeeper and Master Mariners Boards.

Additional Attachments

Acknowledgement Required *

Please note that appointment to this position may require you to file a conflict of interest disclosure statement or complete additional trainings with the City Clerk. This information is a public record and these statements are available to the public on request.

☑ Acknowledged

Signature *

All information contained in this page is public data and will be made available for public review upon request. Qualifications and interests of applicants will be provided to the City Council in a public forum and will be reviewed before appointments are made. Questions regarding this application and appointment process should be directed to the Capitola City Clerk.

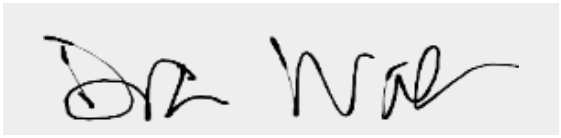

Boards and Commissions Application

Thank you for your interest in serving on a City of Capitola Advisory Group. Please fill out the following form with your information. Appointments are made at a public City Council meeting.

Application For:

Application For:

- [ ] Art and Cultural Commission - Artist
- [ ] Art and Cultural Commission - Arts Professional
- [x] Art and Cultural Commission - At Large
- [ ] Capitola Village and Wharf Business Improvement Area Advisory Committee
- [ ] Commission on the Environment
- [ ] Finance Advisory Committee - At Large
- [ ] Finance Advisory Committee - Business Representative
- [ ] Historical Museum Board
- [ ] Planning Commission
- [ ] Other:

Applicant Information

First Name *

Sonia

Last Name *

Leclerc

Email *

[redacted]

Current Address *

Street Address

[redacted]

Address Line 2

City

SANTA CRUZ

State / Province / Region

CA

Postal / Zip Code

95065

Country

United States

Telephone (Home)

[redacted]

Telephone (Mobile) *

[redacted]

Are you a Capitola resident? *

No

Residential Neighborhood:

Santa Cruz Gardens - Not too far

Are you applying as a Youth Member to an Advisory Group? *

No

Youth Members are encouraged to participate with City Boards, Committees, and Commissions.

Qualifications

Occupation:

Please describe your qualifications and interest in serving on this Board/Commission/Committee: *

Hi. I am deeply committed to civic engagement, cultural enrichment, and community building, with years of service on city and county organizations and committees. I participated in the 2020 Capitola Local Government Academy and previously served on the Sheriff's Advisory Team and the Santa Cruz County Community Traffic Safety Coalition, gaining valuable insight into public process, collaboration, and community needs.

My work consistently centers on bringing people together to strengthen place, identity, and quality of life—values that closely align with the arts. I am the founder of my neighborhood Firewise Community Recognition by the National Fire Protection Association, an initiative rooted in neighborhood collaboration, education, and stewardship. I have also volunteered with SCC Big Brothers Big Sisters and served as a former Ambassador for the Santa Cruz Chamber of Commerce, supporting local businesses and creative entrepreneurship.

Through my volunteer leadership with Bike Santa Cruz County, I initiated and led the effort that earned the City of Santa Cruz Bicycle Friendly Community Gold status in 2015, and later supported Watsonville's 2017 application and Scotts Valley application. These efforts reflect my belief that thoughtful design, creative placemaking, and public art are essential to building vibrant, connected, and accessible communities.

I am also on the Los Gatos technical advisory committee (TAC) made up of members that represent Los Gatos to help guide the Vision, Goals, and Strategic Plan for the Urban Forest Management Plan (UFMP)

As an Arts Commissioner, I am passionate about supporting artists, celebrating cultural diversity, and advancing programs that integrate the arts into public spaces, civic life, and everyday experiences. I am driven by a desire to make a meaningful difference and to help shape a community that is inspiring, inclusive, and a better place to live for all.

I believe I will be a creative and productive asset for the arts in the beautiful community of Capitola.
Thank you for your consideration.
- Sonia Leclerc

Additional Attachments

Acknowledgement Required *

Please note that appointment to this position may require you to file a conflict of interest disclosure statement or complete additional trainings with the City Clerk. This information is a public record and these statements are available to the public on request.

☑ Acknowledged

Signature *

All information contained in this page is public data and will be made available for public review upon request. Qualifications and interests of applicants will be provided to the City Council in a public forum and will be reviewed before appointments are made. Questions regarding this application and appointment process should be directed to the Capitola City Clerk.

Sonia Leclerc

Art & Cultural Commission

Agenda Report

Meeting: November 10, 2026

From: Community & Economic Development Department

Subject: Village Wayfinding Signage

Recommended Action: Accept presentation and provide feedback to staff on the signage concept.

Background: In June 2026, the Capitola Village Business Improvement Association (BIA) approached City staff regarding the possibility of new aesthetically pleasing wayfinding (map) signage distributed throughout the Capitola Village and primary City Hall parking lots.

Discussion: The new signs are intended to assist pedestrian visitors with navigation around the Village, including those using City parking lots. The BIA proposed six locations, including one each in the upper and lower City Hall parking lots, and four locations throughout the Village.

The signs incorporate stained glass artwork, originally designed for the recent Wharf restoration project, on the opposing signage faces. The glass designs were selected from the patterns not used in the final wharf project.

Since the proposed signs would be on City property and for public use, Community & Economic Development (CED) and Public Works Department staff considered factors similar for municipal signage. Considerations included street visibility and safety, Americans with Disabilities Act (ADA) compliance for viewing and moving around signage, obstruction of existing signs and amenities, signage durability, ease of replacement, and costs of manufacture and replacement.

During site inspection, staff found the proposed Village to be difficult to accommodate the interactive signs while maintaining ADA compliance and visibility at intersections. Three alternative locations were identified nearby that could satisfy these requirements (Attachment 2). For ADA compliance, sign height would require revision, restricting all wayfinding elements between 27-40” above grade, and increasing minimum lettering size for three-food reading distance. The map sections are separately fabricated using beBond (aluminum composite panel), which is durable and easily removed and replaced.

The Public Works and CED departments are seeking Commission input on the proposed signs prior to bringing the matter to the City Council.

Next Steps: Staff will incorporate Commission feedback in its report to City Council for discussion and possible action to approve the new signs.

Fiscal Impact: The City has not allocated funding for any portion of the conceptual signage design, manufacture, or installation. Further clarification of sign financing is required for estimating fiscal impact.

Attachments:

1. BIA Signage Concept
2. Staff Alternative Locations

Alignment with 2025-2029 Strategic Plan Priority: Accountable Government; Community Safety; Economic Opportunity; Healthy Families, Community, and Environment; Sustainable Infrastructure

Report Prepared By: Sean Sesanto; Associate Planner

Approved By: Nikki Bryant, Community Services and Recreation Director

CAPITOLA VILLAGE ENHANCEMENT

Glass Mosaic Seabird Art Installations with Directional Maps

Presented by,

BIA



SIX BEAUTIFUL GLASS MOSAIC LOCAL SEABIRD DESIGNS

White Heron

Pelican

Avocets

Sanderlings

Seagulls

Willets

Original Designs for CWEP by Kathleen Crocetti,
Artistic Director
Watsonville Brillante

INCORPORATED INTO CAPITOLA VILLAGE POINTS OF ENTRY VISITOR DIRECTIONAL SIGNS



Mock up
Designed by PPD
Multimedia

BACK

GLASS MOSAIC SEABIRD PANELS (18 X 24)

Beautiful Glass Mosaic Panels of Local Seabirds.

Originally designed for CWEP, available for this project, to be produced through Watsonville Brilliante at the direction of Kathleen Crocetti.



Front

Directional Map

(simple example shown)

"You Are Here" Orientation and includes:

- Points of Interest
- Amenities
- QR Code to capitolavillage.com

Beautiful public art and welcoming guidance for visitors to Capitola Village.

Visitors will enjoy these simple maps posted at strategic points of entry, guiding them to where they are and where they want to go and back again.



THE POINTS OF ENTRY FOR PLACEMENT

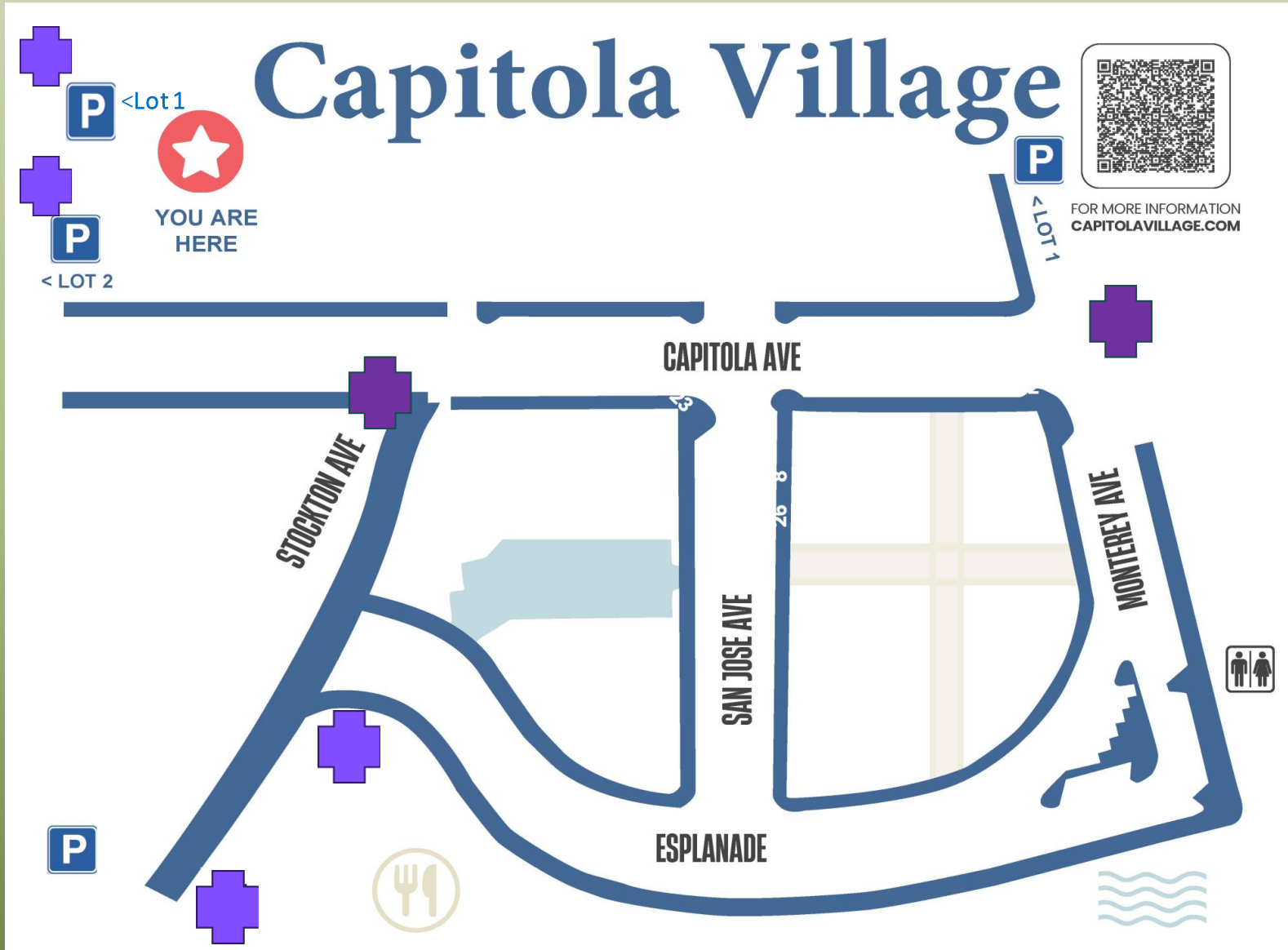

Adjacent Venetians at the intersection of Wharf Road and Cliff Drive.



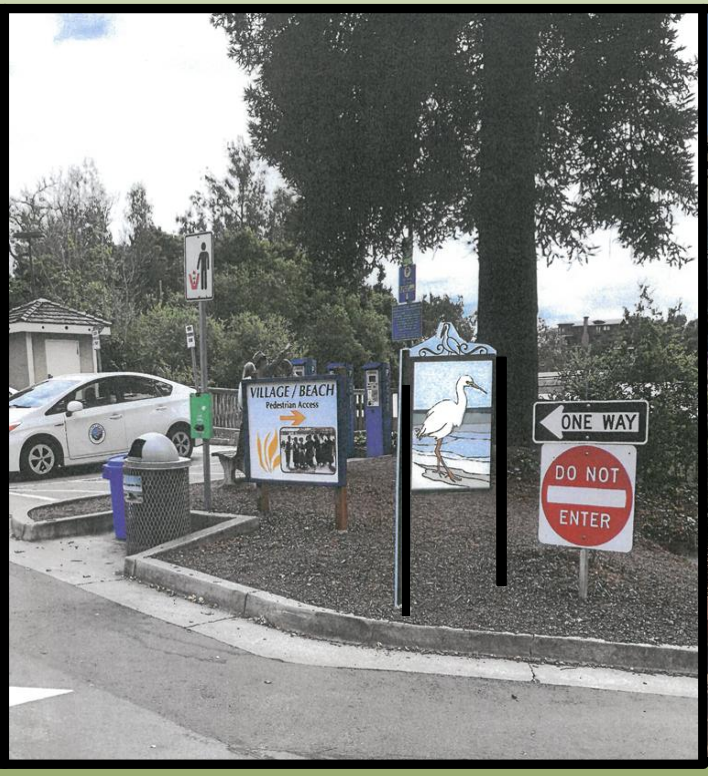



Possible Placement Sites:

Beach and Village Parking 1 & 2

Monterey Ave.



Possible Placement sites:
Stockton Ave. Capitola Ave. Wharf Rd.

Powder Coated Stainless Steele Posts and Frame Dimensions

Available with or without topper

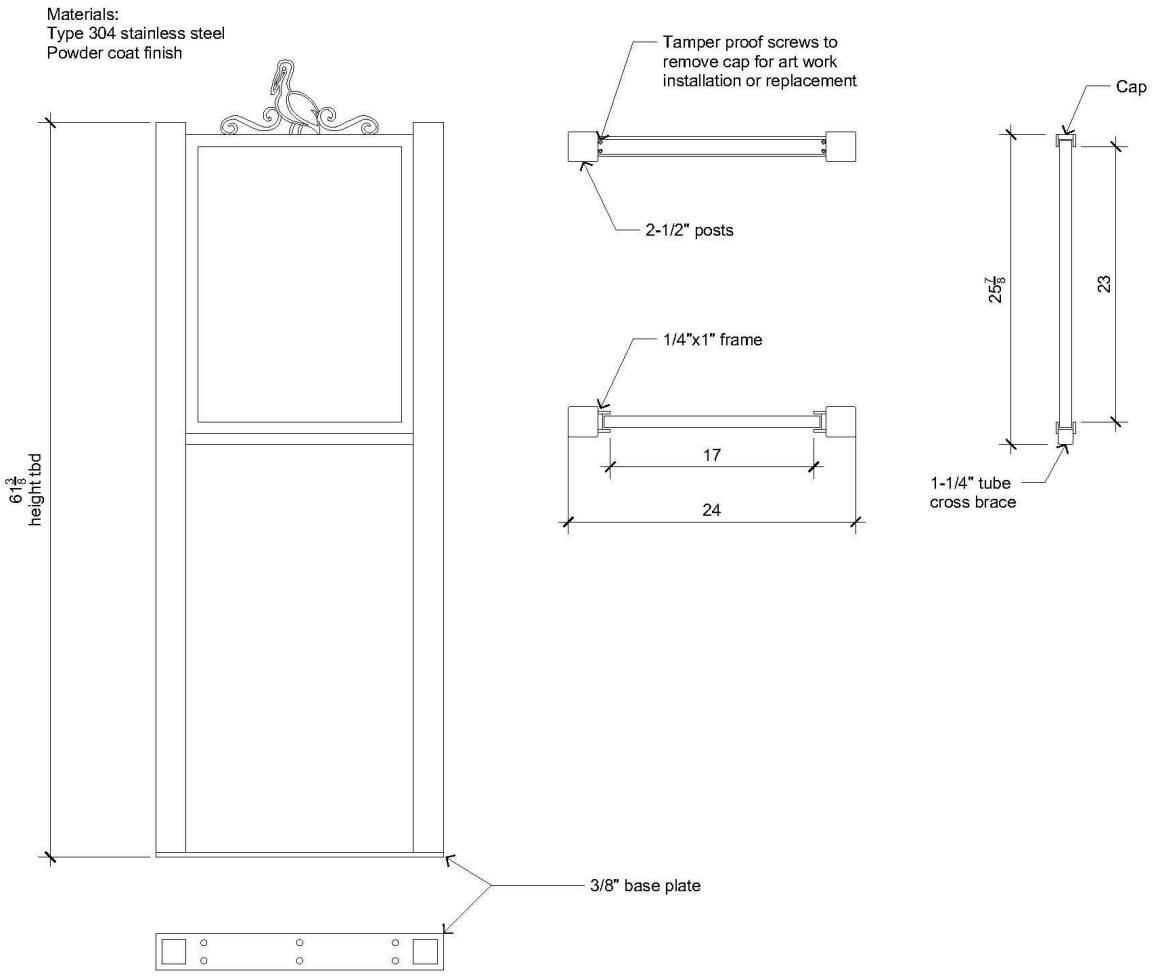

Projected Costs

PPD Multimedia, Inc.
3700 Portola Drive
Santa Cruz, CA 95062
Studio: 831-479-9098
accounting@ppdmultimedia.com
www.ppdmultimedia.com
Lic.#971270

Quote

Invoice #: 00035112
Date: 03/10/26
Ship Via:
Page: 1

Bill To:

Capitola BIA
301 Capitola Avenue
Capitola, CA 95010

Ship To:

Capitola BIA
301 Capitola Avenue
Capitola, CA 95010

Description	Amount	Tx
Design and Layout - Your are Here Map / Sign Imaging / Proofs / Meeting	$600.00	
MAP INSERT 6 - 18" x 24" / You Are Here Maps / Single Sided / Full Color Print / Applied to 1/4" thick Bebond Substrate / $85 ea.	$510.00	X
6 - 1/4" thick center panel to secure artwork and map / $40 ea.	$240.00	X
STAINED GLASS ARTWORK 6 - 1" thick Stained Glass Artwork provided by Capitola BIA $700 ea		
SIGN FRAME 6 - Custom Fabricated Steel Sign Frames / 1.5" Channel / Powder Coated Black / $2375 ea.	$14,250.00	X
SEA LIFE METAL SIGN TOPPER 6 - Same Design For All / 3/8" thick metal / $370 ea.	$2,220.00	X
MISC 12 - bags of Concrete / 2 bags per sign frame / $12 ea. / ESTIMATE ONLY / QTY subject to change / Final Locations not yet settled	$144.00	
LABOR 15 Hrs - Installation / 6 Sign Frames W/Posts / ESTIMATE ONLY / Final Locations not yet settled	$1,800.00	

Basic Design approx. $17,000 plus $4200 Artwork = $21,200 total
Or approx. $3500 per sign (uninstalled, no Topper, Misc)

We appreciate your business.

Your Order #: Maps / Frames
Shipping Date:
Terms: C.O.D.

Freight:	$0.00
Sales Tax:	$1,592.85
Total Amount:	$21,356.85
Amount Applied:	$0.00
Balance Due:	$21,356.85

CAPITOLA VILLAGE

THANK YOU

Wayfinding Signage
Alternative Village Sign Location



1. Intersection of Monterey Avenue and Capitola Avenue, southwest corner.



2. Intersection of Monterey Avenue and Capitola Avenue, southwest corner.



3. Lawn Way and Esplanade, across primary beach access.

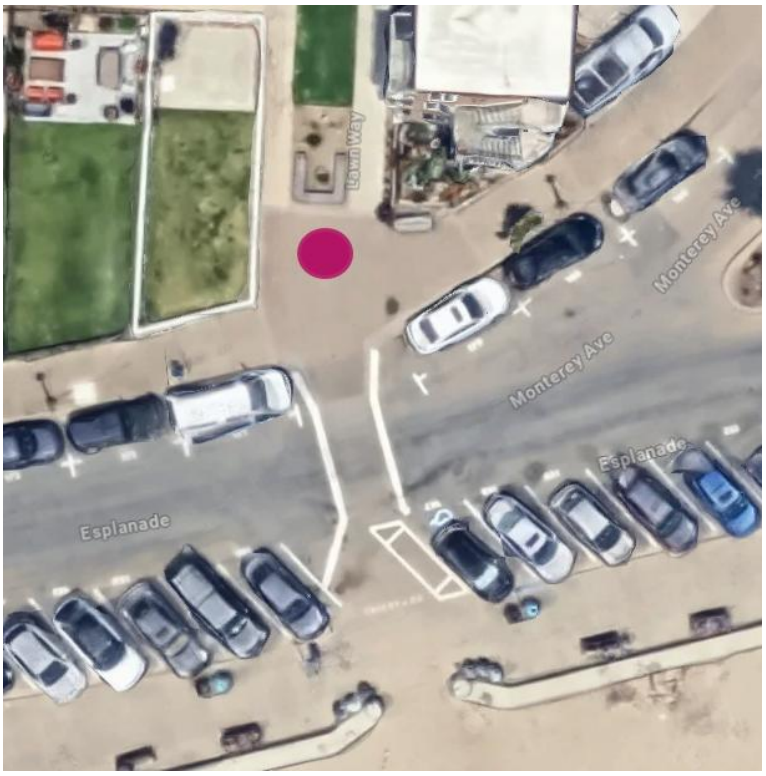

The clear width for sidewalks and walks shall be 48 inches (1219 mm) minimum. When, because of right-of-way restrictions, natural barriers or other existing conditions, the enforcing agency determines that compliance with the 48-inch (1219 mm) clear sidewalk width would create an unreasonable hardship, the clear width may be reduced to 36 inches (914 mm). (CBC 11B-403.5.1, Exception 3)

Art & Cultural Commission

Agenda Report

Meeting: November 10, 2026

From: Community Services & Recreation Department

Subject: Rispin Reflecting Pool Public Art Project

Recommended Action: Review the Rispin Reflecting Pool Public Art Project artist selection process and provide direction to staff regarding next steps, including whether to proceed with the ad hoc committee's recommendation or reissue the Call to Artist.

Background: The City of Capitola opened a park at the historic Rispin Mansion. Extensive community outreach and collaboration helped shape the project vision. A public bid opening held on February 22, 2023, resulted in no bids, as contractors indicated that the project's budget was insufficient for the proposed scope. In response, and in accordance with public contract code, staff worked with local contractor Betz Works to revise the scope to fit the available budget.

One element of the original design that remained unfunded was the Mosaic Reflecting Pool, on the site's historic fountain. To support this component, the Public Works Director applied to the National Endowment for the Arts (NEA) FY26 Grants for Arts Projects (GAP) program. The NEA grant requires a 1:1 match, and the Art & Cultural Commission initially recommended allocating $25,000 from the Public Art Fund toward this match.

On November 13, 2025, the City Council approved an additional $25,000 allocation from the Public Art Fund, bringing the total City commitment to $50,000 for the project. July 2026 the City received an award notice of $30,000 from National Endowment for the Arts grant. The reflecting pool remains temporarily filled for public safety.

Discussion: A Call to Artist for the Rispin Reflecting Pool Project was published with a submission deadline of March 9, 2026, and the City received more than 20 applications, local and international. An ad hoc committee reviewed the submissions and presented six finalists to the Commission on May 12, 2026. The Commission selected four artists to develop concept proposals, with two additional artists identified as alternates. The selected artists were provided with the updated project budget of $80,000, reflecting the City's $30,000 National Endowment for the Arts (NEA) grant and $50,000 Public Art Fund allocation. On September 8, 2026, the four selected artists presented their concept proposals to the Commission.

The Public Works Director reviewed each proposal for site preparation and installation considerations and confirmed that the historic exterior concrete edge of the reflecting pool must remain unmodified. In addition, the path surrounding the reflecting pool is planned to install pavers, replacing the existing decomposed granite. Public Works will provide a detailed schematic to assist the artists in refining their concepts for presentation to the City Council.

Following the September 8, 2026, presentations, the Commission identified The Art of Life and Miles Mathews as the two preferred concepts and referred the item back to the ad hoc committee for further deliberation. Following the meeting, the City received notification from Kathleen Crocetti, a partner to Miles Mathews, that she was withdrawing from the project. Miles Mathews subsequently submitted a revised concept. Both updates were provided to the ad hoc committee for consideration.

The ad hoc committee reviewed the concepts and recommended that the Commission select The Art of Life for consideration by the City Council. Following this recommendation, members of the public and City Council raised concerns regarding the proposed travel expenses associated with the artist's project

budget and the potential impact of these costs on the funds available for the artwork itself. At its October 13, 2026, meeting, the Commission discussed feedback on both preferred concepts and concerns regarding the proposed travel budget. In response to continued public concerns, Commission Chair Cahalen requested that the item return to the Commission for further deliberation.

The project is partially funded by an NEA grant, and maintaining a timeline consistent with the grant requirements would benefit the City. If the Commission elects to reissue the Call to Artist, staff recommends establishing clear geographic eligibility requirements for applicants and setting a new application deadline to help maintain the project schedule.

Fiscal Impact: The Public Art Fund has a current balance of $132,429 with an estimated $60,000 committed to current projects, which includes $50,000 reserved for this project.

Attachments:

1. Original Call to Artist

Alignment with 2025-2029 Strategic Plan Priority: Accountable Government; Healthy Families, Community, and Environment;

Report Prepared By: Nikki Bryant; Community Services & Recreation Director

CITY OF CAPITOLA – CALL TO ARTIST

Rispin Mansion Reflecting Pool Mosaic Project
Issued by: City of Capitola, Community Services & Recreation Department
Deadline: *March 9,2026*

PROJECT OVERVIEW

On behalf of the City of Capitola, the Art & Cultural Commission invites professional artists or artist teams to submit qualifications for the design, fabrication, and installation of mosaic artwork within the historic reflecting pool at Rispin Mansion Park.

This public art project will transform the existing 800-square-foot fountain basin into a permanent, artist-designed mosaic that reflects Capitola's cultural heritage, natural beauty, and sense of community. The project seeks to honor the site's historic significance while creating an engaging visual centerpiece for visitors.

The City has applied for grant funding and if awarded, additional funding will expand the scope of the project, including community workshops, interpretive signage, and accessibility improvements. The Call to Arist reflects this potential range in funding, and artists are encouraged to submit proposals that can be scaled appropriately depending on the final project budget.

The City will award one contract for design, fabrication, and installation services.

BACKGROUND

The Rispin Mansion is one of Capitola's most significant historical landmarks. Constructed in 1922 by San Francisco businessman Henry Allen Rispin, the Mediterranean-style estate originally served as a private residence overlooking Soquel Creek and the Village below. Over the decades, the property transitioned through multiple owners and fell into disrepair before the City of Capitola purchased it in 1986. The surrounding site has since been restored through a multi-year effort to create The Park at Rispin Mansion, envisioned as a public gathering space that celebrates Capitola's history, environment, and community spirit.

In 2022, the City Council approved plans and specifications for park improvements, including pathways, native landscaping, and event areas. A key feature of the original design, a Public Art Mosaic Reflecting Pool within the mansion's historic fountain. The proposed project will transform the existing 800-square-foot fountain into a vibrant mosaic centerpiece that reflects the natural beauty and cultural heritage of Capitola.

PROJECT GOALS

The selected artist or artist team will design, fabricate, and oversee the installation of a durable, site-specific mosaic within the historic Rispin Mansion reflecting pool. The artwork should honor the site's history, its natural setting along Soquel Creek, and Capitola's cultural identity as a coastal community. The City seeks a mosaic artwork that:

- Enhances the historic fountain and complements its architectural features.
- Reflects Capitola's cultural and environmental identity.
- Incorporates high-quality, durable materials suitable for long-term outdoor installation in a coastal environment.
- Invites community pride and participation in the creative process.
- Meets all structural, maintenance, and safety standards established by the City.

SITE DESCRIPTION

The Rispin Mansion property is located at 2200 Wharf Road, Capitola, CA, on historic grounds overlooking Soquel Creek. The reflecting pool is positioned on the upper terrace of the park and is visible from several public viewpoints throughout the site. The existing circular concrete basin measures approximately 30 feet in diameter and encompasses roughly 800 square feet.

The reflecting pool will be repurposed as a permanent, dry public art installation within the park. Prior to installation of the public art mosaic, the City will modify the reflecting pool to create a sloped concrete basin with a maximum basin depth of approximately 18 inches, draining to a center drain connected to the existing fountain drain system. This modification will prepare the site for mosaic installation, and will prevent water from collecting, protect the long-term integrity of the artwork, and ensure compliance with safety requirements. The site preparation drainage improvements will be completed by the City and is not part of the artist's budget.

BUDGET

The total available budget for the project will either be $50,000 or $125,000, depending on the outcome of the NEA grant application.

- Base Budget**:** $50,000 (funded through the Public Art Fund)
- Expanded Budget (if NEA grant awarded): $125,000 total

The total budget must cover all costs associated with the project, including but not limited to: artist design fees, materials, fabrication, transportation, insurance, installation, documentation, and travel. The City will provide project management support and coordinate installation logistics with Public Works staff.

ELIGIBILITY

This opportunity is open to professional artists and artist teams residing in the United States. Artists must demonstrate experience designing, fabricating, and installing exterior public art works of comparable scale and budget. Artists based in California or the greater Central Coast region are strongly encouraged to apply.

ARTIST SELECTION PROCESS

A Selection Panel composed of representatives from the Art & Cultural Commission, City staff, and community stakeholders will review submissions. The process will include:

1. Review of artist qualifications and past work.
2. Selection of up to three finalists to prepare detailed design proposals.
3. Final interviews and selection of one artist or team.

Finalists will receive a modest stipend of $500 for design proposal development if requested to present before the Art & Cultural Commission.

PROPOSAL REQUIREMENTS

Interested artists shall submit the following materials:

- **Letter of Interest** (1–2 pages) describing concept, artistic approach, relevant experience, and connection to the project goals.
- **Professional Resume or CV** (for each team member, if applicable).
- **Portfolio of Work** (minimum of 5, maximum of 10 images of completed projects).
- **References** (minimum of two, maximum of three).

All materials must be submitted electronically in PDF format.

PROJECT TIMELINE

Milestone	Estimated Date
Call to Artist Released	January 20, 2026
Qualifications Due	March 9, 2026
Finalists Selected	April 14, 2026

Milestone	Estimated Date
Final Proposals Presented	May 12, 2026
Artist Selected / Contract Executed	Spring 2026
Fabrication & Installation	Summer 2026
Dedication Event	Fall 2026

SELECTION CRITERIA

Submissions will be evaluated on the following criteria:

- Artistic excellence and originality.
- Demonstrated experience with mosaic or large-scale public art.
- Ability to complete projects on time and within budget.
- Understanding of Capitola's character, history, and environment.
- Strength of community engagement experience.

SUBMISSION INSTRUCTIONS

All materials must be submitted electronically via website to:
City of Capitola – Community Services & Recreation Department

Incomplete or late submissions will not be considered.

Appendices included:

- **Appendix 1 – Photos of Reflecting Pool (site)**
- **Appendix 2 – Historic Location Map**

CONTACT INFORMATION

For questions or additional information, contact:
Nikki Bryant
Director of Community Services & Recreation
City of Capitola
nbryant@ci.capitola.ca.us | (831) 475-7300