TOWN OF BRISTOL, RHODE ISLAND

HISTORIC DISTRICT COMMISSION MEETING

Historic District Commission Meeting Agenda
Monday, June 29, 2026 at 7:00 PM
Bristol Town Hall, 10 Court Street, Bristol, RI 02809

Written comments may be submitted to the Historic District Commission via regular mail addressed to: Historic District Commission, Bristol Town Hall, 10 Court Street, Bristol RI 02809 or via email to ntoth@bristolri.gov

Application packets can be found online at: https://bristol-ri.municodemeetings.com/

1. **Pledge of Allegiance**

2. **Staff Report**

   2A. **Staff Report**

3. **Review of Previous Month's Meeting Minutes**

   1. **Review of June Meeting Minutes**

4. **Application Reviews**

   1. **26-83: 61 Court St, Caitlin Frumerie**

      Discuss and act on addition of wood fence to property along rear of driveway.

   2. **26-62: 15 Church St, Deborah Appleyard**

      Discuss and act on permanent removal of shutters.

   3. **26-67: 99 Bradford St, Carl Pearson**

      Discuss and act on continued door.

   4. **26-53: 224 Hope St, Gregory Leonetti**

      Discuss and act on bulkhead, changes to stairs if not approved at site visit, windows.

   5. **26-74: 570 Hope St, BWRSD**

10 COURT STREET, BRISTOL, RI 02809-2208 401-253-7000 FAX 401-253-2647 www.bristolri.gov

Discuss and act on replacement of door in kind

6. **26-72: 142 High St, Nina Murphy & Bart Ferris**

Discuss and act on installation of Solar Panels.

7. **26-76: 250 Metacom Ave, Mount Hope Farm**

Discuss and act on replacement of garage door with barn door.

8. **26-79: 301 Hope St, Eli Dunn**

Discuss and act on painting of sign on side of building.

9. **26-80: 799 Hope St, Bristol Garden Club**

Discuss and act on installation of information kiosk signage at Thomas Park.

10. **26-81: 1200 Hope St, Infinity 1217 LLC**

Discuss and act on construction of well house, change of previously approved siding materials for carriage houses.

11. **26-82: 8 Constitution St, John Marshall**

Discuss and act on replacement of denied sliding glass door with window on rear of garage.

12. **26-54: 244 Metacom Ave, Andrew Broten**

Discuss and act on demolition of stone structure based on recommendations from RIHPHC.

13. **26-84: 244 Metacom Ave, Andrew Broten**

Discuss and act on addition of multi-sport court area with fences and lighting on property, previously presented as HDC-25-65.

14. **26-33: 145 High St, Danny Ferreira**

Discuss and act on demolition of garage, rehabilitation of home and construction of addition, additional site work.

15. **25-12: 125 Hope St, Nancy DiPrete Laurienzo**

Discuss and act on demolition of existing structure and replacement.

5. **Concept Review**

6. **Monitor Reports & Project Updates**

7. **HDC Coordinator Reports & Project Updates**

8. **HDC Coordinator Approvals**

9. **Other Business**

10. **Adjourn**

HDC Staff Report

June 29, 2026

Application Reviews

26-83 – 61 Court Street
Report
Applicant wishes to install all wood picket fence along rear of driveway, facing street frontage. Posts, pickets, and any gates have been confirmed to be all wood.
Relevant Standards
9

26-62 – 15 Church Street
Report
Applicant previously removed shutters for repair under application 26-2 due to severe degradation which was observed at the time of application by staff. Applicant wishes to permanently remove shutters due to the shutters being found to be unrepairable and due to cost.
Relevant Standards
9

26-67 – 99 Bradford Street
Report
Applicant is returning with continued application with redesigned door. Proposed door is a 6 panel door with the two top panels being lights, versus the door proposed originally which the commission found to be inappropriate.
Relevant Standards
9

26-53 – 224 Hope Street
Report
Applicant is returning based on need for additional discussion of windows. Since the previous meeting, additional research was done regarding previous approvals. In the several times this applicant appeared before the commission regarding the windows, the only specific reference to the way windows might sit in a frame, trim, or anything to that effect was as follows from the August 7, 2025 Meeting: Millard: I tend to feel that I would like a little more information particularly on the window frame itself. Marvin isn't going to replace your window frames are they. So, they're going to have to fit their replacement window into your frame. Are they responsible for doing all of the fitting or are they just delivering the

windows to have your contractor put them in? How does that work?

Leonetti: The latter. They will deliver the windows and it will be up to my contractor.

Between meetings, the RI HPHC was not able to make a review at this property as the meeting could not be scheduled in time.

The commission should discuss what next steps it wishes to take on this matter.

Relevant Standards

26-74, 570 Hope Street
Report
The Bristol Warren Regional School district is seeking to replace external door number 3 on Colt School. This door, per conversations with BWRSD Staff, was an interior door that was put in place as a repair of expedience, and has degraded significantly over time. While the proposal calls for the door to be replaced in kind, the door fronts to Wardwell St and therefore is not eligible for administrative review.
Relevant Standards
9

26-72 – 142 High St
Report
Applicant wishes to install solar panels on the south elevation of the rear building two on the property. Panels would be mounted to the roof, which does not appear to be any material that would have its historic authenticity, integrity, or character altered by the installation or removal of said solar panels. The location of the panels in the rear of the property further reduces the likelihood that these panels will be visible from the street or other public place.
Relevant Standards
9

26-76 – 250 Metacom Ave
Report
Applicant proposes replacement of existing roll up garage door that has been put on one of the outbuilding barns with swinging cedar doors. Applicant has provided materials in description of proposed work and marked proposed door on attachment. Commission may wish to clarify the outbuilding in question and its age, however few are visible from the street.
Relevant Standards
9

26-79 – 301 Hope St
Report
Applicant wishes to have a sign painted directly on the side of the proposed property.

The proposed sign will be entirely painted, directly painted on to the siding, which is entirely wood and therefore no masonry will be damaged. The proposed location appears to be on the north elevation of the building. Commissioners may wish to confirm size, which is proposed at 9 feet – current regulations allow for 8 square feet in the D, W, and LB zones. This will need to be reviewed by the zoning officer as well, and this may not be an issue.
Relevant Standards
9

26-80 – 799 Hope St
Report
The applicant proposes to install several signs in Thomas Park/Perry Garden, constructed of primarily aluminum. Signs are substantially identical in design and construction to other signs throughout the Historic District, and provide additional historic context to the gardens.
Relevant Standards
9

26-81 – 1200 Hope St
Report
Applicant is applying to reconstruct wellhouse and is looking to have previously approved siding on the carriage houses. The well house is designed to replace previously demolished one in kind. Commissioners should confirm materials if needed. The previously approved siding material is clapboard, and the applicant wishes to change the siding on the upper levels of the carriage houses to shingles. This would be done entirely in wood.
Relevant Standards
9

26-82 – 8 Constitution St
Report
Applicant wishes to remove denied sliding glass door and replace with windows. This was a suggestion made by some commissioners at at least one review of the previous and denied application.
Relevant Standards
9

26-54 – 244 Metacom Ave
Report
Applicant seeks to demolish the stone Dairy/Ice House Structure. One June 23, staff from the RI Historic Preservation and Heritage Commission toured the property to observe the structure. They remarked that they would need some additional time to find more information – likely several weeks – and needed to confer with other experts. This item is likely to be continued.
Relevant Standards

26-84
Report
Applicant seeks re-authorization and additional approval for revised multi-use sports court. The general form and location was previously approved, with the stipulation that additional information was required for the lighting. This was not provided, and the approval lapsed. Commissioners may wish to refer to application HDC-25-65.
Relevant Standards
9, 10

26-33 – 145 High St
Report
Applicant is returning with a redesigned application based on feedback from the June 4 2026 meeting. At this meeting, the commission expressed concerns about the massing of the property and the layout. Based on this, the applicant has changed the proposed design to be based on the this feedback, retaining an in-line setup. The applicant also is requesting demolition of the remaining portions of the ten car garage, which was brought up, but not voted on. At its previous meeting, the commission raised no concerns about the garage.
Relevant Standards
9, 10

25-12 – 125 Hope St
Report
Applicant has submitted revisions to the design for a new structure discussed at the June 4 2026 meeting. Commissioners had concerns about the amount of windows on the rear of the property at this previous meeting, stating it did not fit the character and the water was still an important frontage. The applicant has made these changes.
Relevant Standards
9, 10

Staff Approvals

Record #	Applicant Name	Date Submitted	Address	Description of Proposed Work
HDC-26-87	Kevin Roche	6/23/2026 16:00	495 HOPE ST, BRISTOL, RI 02809	Similar decal on front window that is currently there that says Norcom Mortgage. Â dimensions same, logo differentÂ
HDC-26-78	Jacob Ledsworth	6/9/2026 9:59	72 CONSTITUTION ST, BRISTOL, RI 02809	installation of a Deluxe 4 Ton Hyrdronic AC System
HDC-26-77	William Magee	6/9/2026 6:43	165 HIGH ST, BRISTOL, RI 02809	Replace shingles on main roof using Owen Cornings

				(architectural) True Definition shingles in Onyx Black.
HDC-26-75	Robert Page	6/1/2026 15:08	423 HOPE ST, Unit 11K, BRISTOL, RI 02809	Remove an outward swinging door and replace with. inward ard swing door. Â Also go from door with upper window and lower wood panel to a door with glass with wood surround.
HDC-26-73	Spencer McCombe	5/27/2026 13:17	267 THAMES ST, BRISTOL, RI 02809	Replacing an existing Ptac (HVAC) system at Empire Tea & Coffee that sticks out of the existing exterior wall on the south elevation as seen in attached photo with a Heat Pump that will be in the same location and hung off the exterior wall as shown on attached AI generated photo. The proposed 12,000 BTU heat pump spec is also attached.
HDC-26-71	Leonard Paiva	5/20/2026 11:06	10 HIGH ST, BRISTOL, RI 02809	Install one new outdoor heat pump condenser and relocate one existing condenser from south south of home to east side of home
HDC-26-70	Gregory Pastore	5/19/2026 10:22	44 CHURCH ST, BRISTOL, RI 02809	Installation of wood fence on side and rear of property. Â Will be 4' along driveway, 6' in back yard

HDC-26-69	JUAN CRUZ	5/17/2026 17:51	15 JOHN ST, Unit 1, BRISTOL, RI 02809	West Elevation Windowsâ€¢Â Caulk open seams around window sash trim. around storm windows and flashing.Open up weep holes. Touch up caulk around window trim and flashingWest Elevation General Repairsâ€¢Â Replace any rotted clapboards, corner boards, skirt board, window trim and sills andbetween windows, . Prep, prime and paint.All work is replacement in-kind. Please note that pictures are of the side of the house to be worked on. There are siding splits, trim board splits, rot, and other areas in need of repair that are either behind a tree, or might be too small to see on the pictures. This side of the house does not face the street.
HDC-26-68	Christine Glazier	5/15/2026 13:58	9 COURT ST, BRISTOL, RI 02809	Replacing existing cooling system
HDC-26-86	Diane Neslund	6/17/2026 15:59	76 STATE ST, BRISTOL, RI 02809	white lettering with bullet points. logo, website and qr code

Town of Bristol, Rhode Island

Department of Community Development

10 Court Street
Bristol, RI 02809
www.bristolri.gov
401-253-7000

June 29, 2026

Memo to Members of the HDC

RE: Revisions to Historic District Administrative Review Procedure

Commissioners:

As we have seen over the last few years, the agendas before this commission are becoming unwieldy. Meetings have routinely go for more than 3 hours and frequently cause friction with applicants.

The first item is to officially put a cap on the number of agenda items that can be heard by the commission. Staff would make the recommendation of no more than 12 items, with the chair having discretion to reduce further should large projects be on the agenda all at once.

This has been discussed before, but the concern from the staff has been that it would only serve to force repeated continuances and create massive backlogs – or cause a number of items to be automatically approved due to the 45 day time limit the town ordinance on review. To combat this, I would propose using the recently submitted and soon to be adopted standards guide to allow expansion of the administrative approval powers granted to staff, or at the very least add a number of frequent applications to the list to reign in these massive agendas.

Several items that could be explored are as follows:

1. All fences more than 15 feet from street frontage, as well as those not on street frontage
2. All replacements of demonstrably non-historic windows in-kind (i.e. Vinyl for Vinyl, Clad for Clad)
3. All replacements of doors in-kind
4. Replacement of signs provided they meet the same dimensions of existing signage OR allow for administrative approval of all signs
5. Installation of Sheds or small out buildings provided they are below the threshold for a building permit
6. Re-Authorization of expired approvals, provided no items have changed.

I will conduct additional research to determine additional items when this comes to the commission for official action.

TOWN OF BRISTOL, RHODE ISLAND

HISTORIC DISTRICT COMMISSION

Historic District Commission Meeting Minutes
Thursday, June 4, 2026
at 7:00 PM
Town Hall - 10 Court Street, Bristol Rhode Island

Written comments may be submitted to the Historic District Commission via regular mail addressed to:

Historic District Commission, Bristol Town Hall, 10 Court Street, Bristol RI 02809 or via email to ntoth@bristolri.gov

1. Pledge of Allegiance

The meeting was called to order at 7:02PM, and the Pledge of Allegiance was promptly recited afterwards.

In attendance: Lima, Allen, Church, Millard, Bergenholtz, Page, and Camara

Also in attendance: Town Solicitor Teitz, and Toth

Absent: Ponder

2. Staff Report

2A. Staff Report

3. Election of Officers

Attorney Teitz explained the procedure to the Commission, then the Commission made their nominations. Chairperson Lima nominated Member Allen for Chairperson of the HDC.

Voting Yea: Lima, Church, Millard, Allen, Page, Bergenholtz, and Camara

Opposed: None

Motion carries

Chairperson Allen nominated Member Bergenholtz for Vice Chairperson

Voting Yea: Allen, Lima, Bergenholtz, Millard, Church, Page, and Camara

Opposed: None

Motion carries

Member Lima nominated Member Millard for Secretary

Voting Yea: Lima, Bergenholtz, Camara, Allen, Church, Page, and Millard

Opposed: None

Motion carries

4. Review of Previous Month's Meeting Minutes

4A. Review of minutes of the May 7, 2026 meeting.

Chairperson Allen asked if any members had any corrections. Member Bergenholtz's corrections were as follows: page 22, 3rd paragraph, it should read "try to get the height down" not "try to get it down". Page 31, last paragraph, it should read "Member Bergenholtz asked if", not "Member Bergenholtz said". Page 39, last paragraph, middle of the paragraph, the sentence should read, "Member Bergenholtz felt it was something lie a functional barn as root cellars didn't have large windows".

Chairperson Allen's corrections were as follows: page 25, first full paragraph, middle of the paragraph, it should read, "Attorney Teitz asked if there was any evidence of shutters being on the house previously." Page 33, last paragraph, the word "indicate" should be changed to "indicated".

Motion made by Member Church to accept the minutes of the May 7, 2026 meeting as amended; Seconded by Alternate Member Camara.

Voting Yea: Church, Camara, Lima, Allen, Bergenholtz, Millard, and Page

Opposed: None

Motion carries

4B. Review of minutes of the 8 Constitution Street site visit meeting.

Chairperson Allen asked if anyone had any comments or changes. No changes were made.

Motion made by Member Lima to accept the minutes as presented; Seconded by Alternate Member Camara.

Voting Yea: Lima, Camara, Bergenholtz, Millard, Allen, Page, and Church

Opposed: None

Motion carries

4C. Review of minutes of the 70 Griswold Avenue site visit meeting.

Chairperson Allen asked if any members had any changes or comments. There were no comments or changes made.

Motion made by Member Lima to accept the minutes as presented; Seconded by Alternate Member Camara.

Voting Yea: Lima, Millard, Camara, Page, Bergenholtz, Allen, and Church

Opposed: None

Motion carries

4D. Review of minutes of the Standards Guide review meeting.

Chairperson Allen asked if any members had any changes or comments. Member Lima expressed to Nick to thank Arnold for his hard work, that he did a great job and it would work well for the Commission. There were no changes made.

Motion made by Member Lima to accept the minutes of the review as presented; Seconded by Member Page.

Voting Yea: Page, Lima, Allen, Church, Millard, Bergenholtz, and Camara

Opposed: None

Motion carries

5. Application Reviews

5A. 25-35: 248 Hope St, Derek Rogers Discuss and act on installation of shed, solar tunnel on roof, replacement of existing skylight with larger skylight.

Derek and Elaine Rogers were present.

Mr. Rogers presented the application to the Commission and a discussion commenced. Mr. Rogers stated there were 3 items to discuss: 1) 10x12ft shed to be installed in the back yard; 2) replace a skylight with a newer larger skylight; and 3) install a 10 to 14 inch solar tunnel/tube which would magnify light into a dark area upstairs. Chairperson Allen stated the Commission had approved of solar tunnels previously, but neither were like the one he was proposing as they were flat to the roof. He said the Commission preferred it that way and it was in a house on Burton Street. Mr. Rogers said he had no problem with that and would be happy to look into it. Chairperson Allen said it might have been the same manufacturer. He stated it was the first house on the north side of Burton Street off of Hope Street. Mr. Rogers said he would call the manufacture. Member Lima suggested Nick could look it up for Mr. Rogers. Nick said he would need the exact address and Chairperson Allen said he would get it for him. Nick said he would pull the file on the Burton Street house to get the manufacturer's information for Mr. Rogers. Mr. Rogers stated that the solar tunnel would not be visible from the street. Chairperson Allen said that made a difference as the one on Burton Street was visible.

Chairperson Allen said to Mr. Rogers that it stated in the application a 10 to 14 inch solar tunnel. Mr. Rogers stated that was because the manufacturer was offering different prices and he told the salesperson that he

would choose one depending on the what kind of deal they offered him. Chairman Allen stated the Commission would allow the Project Monitor to approve the size of the solar tunnel Mr. Rogers decided on.

Chairperson Allen asked Mr. Rogers for the dimensions of the new skylight. Mr. Rogers stated that it was 48x30, which was larger than the old skylight. Chairperson Allen asked Mr. Rogers the size of the old skylight and Mr. Rogers said it was 24x24. He stated it was located on a slanted roof which made it difficult to utilize their tub. Mr. Rogers said the new larger skylight would allow for more head space so they could use the tub more easily. Chairperson Allen asked if the skylight would be visible from the street and Mr. Rogers said yes. Member Church asked if it would be in the same location and Mr. Rogers said yes.

Mr. Rogers then discussed the installation of a 10x12 shed manufactured by Tough Shed. He said it would be kitty cornered in the back yard and not visible from the street. Member Church asked what the materials were for the shed and Mr. Rogers stated it would be all wood materials. Chairperson Allen asked if it was real wood, T-111, or a wood composite. Mr. Rogers guessed that it was a combination of both wood and composite or T-111 materials. Chairperson Allen asked Nick if the Commission had previously approved T-111 siding on sheds and Nick wasn't sure. Chairperson Allen asked if the shed was visible from the street and Mr. Rogers said no. Member Lima asked where the shed was going to be located in relation to the generator in the back yard. Mr. Rogers stated when he originally submitted his application, he wanted the shed to be located in the spot next to the generator but due to the restriction of space, he couldn't do it. He later submitted a picture of trees and shrubs in the corner of the yard and that's where he planned on placing the shed. Member Lima said that meant it would be located behind generator. Alternate Member Camara said it wasn't going to be on the flat area shown in the picture and Mr. Rogers said that was correct.

Chairperson Allen asked if anyone in the audience wanted to speak for or against the application. No one came forward.

Motion made by Member Lima to accept application 26-35 as presented. The Project Monitor will make the final determination on the size of the solar tunnel; Seconded by Page.

Voting Yea: Lima, Page, Bergenholtz, Allen, Millard, Church, and Camara

Opposed: None

Motion carries

Secretary of Interior Standards: 9, 10

Project Monitor: Bob Camara

Chairperson Allen stated the green sheet would be available. Nick stated it would be available online on the portal and asked Mr. Rogers to display it somewhere visible on his house.

5B. 26-53: 224 Hope St, Gregory Leonetti Discuss and act on changes to front stair, addition of bulkhead, other improvements.

Greg Leonetti was present.

Mr. Leonetti reviewed his application with the Commission and a discussion commenced. Mr. Leonetti informed the Commission that he was going to forego the shutters for the time being. He stated that for the front steps he would like to use the same brick veneer material for the front of the stairs as he was using on the chimney. Mr. Leonetti would then use a blue stone for the steps. He stated the brick veneer would match the chimneys for a cohesive look.

Member Bergenholtz state the big concern the Commission had from the last meeting was the window casings. The Commission asked Mr. Leonetti at the last meeting to go back and figure out what happened. Member Bergenholtz stated it was not the federal aesthetic that's in the district. Mr. Leonetti discussed it with the manufacturer, Marvin, the lumber yard, and his contractor. He stated based on what was previously there he said there was never a true recessed look that would be usually seen on a traditional home where the brick

carried on into the recession. Mr. Leonetti stated in order meet the standards they had set with the size of the windows as the specs were for the exact same window size which were approved, that was the best way to weather guard against the brick. From his understanding, it created a proper seal so the sealing could go right on the side whereas with the half bricks there the trim would rub on the side of the brick causing damage to them and wouldn't for a proper seal.

Member Bergenholtz reiterated that the Commission did not approve of it and it looked incorrect on a federal brick home. He said having the lintel set back didn't look correct and certainly wouldn't have voted on it. Member Bergenholtz understood that Mr. Leonetti had come before the Commission several times for the window replacements and they finally gave him their approval as they thought he was going to do it with a window that would have the same look that was there. He stated Mr. Leonetti completely altered the look of the house. Member Bergenholtz said it was a prominent house on a corner and didn't understand how it happened as it wasn't approved.

Member Lima asked Mr. Leonetti where the windows that were removed were. Mr. Leonetti said he gave some of the windows to a local architect. He stated the windows were not the original windows. Mr. Leonetti posted other windows on Facebook marketplace and Craigslist for a couple of weeks to see if anyone wanted them and no one wanted them, so he disposed of them. Chairperson Allen asked Attorney Teitz what options did the Commission have to handle the issue. Attorney Teitz said the Commission should hear from the contractor first and since it wasn't before the Commission as part of the application, they needed to move on to items before them. Member Bergenholtz stated the Commission held off on their votes at the last meeting based on the based on Mr. Leonetti coming back with answers to their questions.

Mike Martins, the contractor, came up to speak. He stated they used the existing window frame to attach a new construction window which had 1½ inch flange. Mr. Martins said when they took the original brick molding away there was anywhere between 1/4 to 1/2 inch of caulk and a lot of the mortar and brick pulled away with the caulk. They thought instead of 1½ inch trim which still wouldn't have been inset, the bolder trim was a nicer look. Mr. Martins said they were never made aware that

the Commission had specified a trim type. Member Bergenholtz stated they hadn't specified one as the point was there shouldn't have been trim. Mr. Martins stated the windows were the same size. He didn't remove the existing window frame. He said to have done what the Commission would have wanted, the frames would have to have been removed, and the windows inset which probably would have made the windows smaller to accommodate a reasonable sized piece of trim. Mr. Martins said the trim that was there has been well caulked and siliconed. He stated some flashing will be put on the heads when they can find a mason. Mr. Martins said that wasn't a real concern. The real concern was the look of it. Member Bergenholtz stated the look that they wanted, not what it should look like. Mr. Martins said they weren't made aware of what they were required to do anything for the trim. He said he was aware that the windows had to be replaced like for like.

Member Lima asked who the Project Monitor was and Member Page said he was. She asked Member Page if anyone had contacted him. Member Page said he went to the property several times. He felt it was unusual to put the windows on the outside because of the issue of leakage against brick which is why they're generally installed inside. He said going over and looking at it today, there would be too much damage to do anything about it now. Member Page said admittingly when the Commission talked about the windows going in, he couldn't imagine that the windows wouldn't have been inset because that's generally what's done to brick and stone. He stated there was never a discussion on that issue. Member Bergenholtz said there have been replacement windows done in federal brick houses in the district before and they never required a trim like what was done here. Mr. Martins stated he didn't do replacement windows; he did new construction windows.

Mr. Leonetti said all of the specifications were submitted and he did stick to those. Member Bergenholtz stated Mr. Leonetti didn't provide any information about the window casing on the outside. Mr. Leonetti said the specifications were provided regarding the window. To his understanding, it seemed the only way to do what the Commission was looking for was to install a smaller window. Member Bergenholtz stated that wasn't true as there was a brick house a block away on the corner of Hope Street and Constitution Street that did replacement

windows that were replaced exactly as was specified. Mr. Leonetti stated he replaced the windows with the ones he specified, and he wish he knew about the situation sooner.

Attorney Teitz asked Mr. Martins if he had worked in a historic district before and Mr. Martins said yes. Attorney Teitz stated that Mr. Martins knew that any changes to a design needed to be approved. He said there was a change to the design of the window. Mr. Martins said he didn't know. Attorney Teitz asked him how he could have worked in a historic district previously yet not knowing that all changes to the exterior needed to be approved. Mr. Martins stated that he was in the house when there was a site visit and the trim issue was never brought up. Attorney Teitz said he was at the site visit and was pretty sure there was a question about the casing and if he was changing the casing and the answer was no, it was going to be replicated. Mr. Martins said it was never brought up.

Member Lima asked Nick if he could get the minutes of the site visit. Nick said he would pull the minutes and review them. Attorney Teitz stated he talked to Nick about looking at the possibility of bringing a notice of violation. He said it was not a given in a historic house that just because one thing was approved other elements of it can't be changed because it's a nicer appearance. Attorney Teitz just wanted to make sure there was no question about it. Nick asked if there was anything that could be done to modify the trim in the interest of making sure that Mr. Leonetti didn't have to rip out windows and the Commission was going to be seeing something that didn't get approved. He wanted to see if there was a way to bring it up to what the Commission wanted to see and not place an undue burden on Mr. Leonetti.

Mr. Leonetti voiced his frustration as the window specifications were provided and the trim was never discussed. He did what was best for the longevity of the project. Chairperson Allen stated Member Bergenholtz had concerns about the brick holding up. Member Bergenholtz stated Dr. Catherine Zipf brought up the concerns, not him. He just was more concerned about the aesthetics of the home. He said that he and Dr. Zipf felt it was completely wrong. Chairperson Allen said they would check the minutes.

Member Church asked if the specifications specified the exterior trim. She said it looked like they were all interior drawings and nothing about the exterior. Mr. Leonetti guessed it was just something that was overlooked. Member Church stated there was nothing in the specifications about exterior trim. Attorney Teitz said that's what Mr. Leonetti was saying. Mr. Leonetti said it was never discussed. Attorney Teitz said it meant that the trim would stay the same. He did remember someone asking about the casing but suspected that was on the inside. Attorney Teitz said going forward the Commission needed to develop a policy that when windows were going to be replaced, that only 1 window should be done and then the Project Monitor or the Commission should see it to make sure it was done as approved. He said they needed to go back and look at minutes of the site visit, but for now the Commission needed to move on to other stuff.

Chairperson Allen asked Mr. Leonetti if the brick on the stairs was full brick or a veneer. Mr. Leonetti said it was going to be a brick veneer to match what was approved on the chimneys. Chairperson Allen said it was more appealing than the stone veneer he had proposed originally. Member Bergenholtz stated the brick veneer was approved because it was 30ft in the air and that having it on the steps would look like fake brick. Mr. Leonetti said it was real brick. Member Bergenholtz said it wasn't a real federal brick. Mr. Leonetti said it would match the aesthetics of what was approved for the chimneys. Member Bergenholtz said that was approved because it was up high. Chairperson Allen asked if there was a way to use real brick. Mr. Leonetti said he wanted to utilize the existing cement that was on the steps rather than having to break it all open in order to keep the steps the same size.

Member Lima asked if anyone has physically seen the brick veneer. Mr. Leonetti said he didn't have a sample with him. Nick asked if he had the spec sheet on the brick. Member Church said the spec sheet was in the packet and it was a 3x5 veneer. Member Bergenholtz stated that was for the stone veneer, not the brick veneer. Member Church said that all of the stonework was now out and Mr. Leonetti wasn't going to do any of it. Mr. Leonetti said he was told it wasn't historic. Member Church said the foundation of the house was going to be left alone and

Mr. Leonetti said yes. Member Lima asked if the Commission could see a sample of the brick before it gets put on. Mr. Leonetti said his goal was to get the outside of the house done by the 4th of July and asked if they could do a site visit. Nick said he could set that up. Attorney Teitz stated it could be delegated to the Project Monitor for approval and suggested that there be 2 Project Monitors for the project. He made the suggestion as there have been problems setting up site visits. Chairperson Allen suggested Member Bergenholtz be the second Project Monitor and asked Member Page if he was okay with it and Member Page said yes. Nick asked for a sample piece of the brick to be submitted for the record.

Chairperson Allen asked if there was mortar in between the bricks and Mr. Leonetti said yes. He asked if Mr. Leonetti could make a mock-up of 2-3 pieces of brick with mortar in between so the Commission could see it. Mr. Leonetti said he could have it done. The Commission stated they wanted the spec sheet on the veneer. Mr. Leonetti asked if there was a site visit done, would he be able to get approval and Chairperson Allen said yes. Nick clarified that the Commission would be making a decision this evening contingent on the approval of the 2 Project Monitors. He said he would work with Member Page and Member Bergenholtz to set up a time. Mr. Leonetti said the earlier the better.

Mr. Leonetti then discussed the installation of a bulkhead door. He said he did a thorough walkthrough. He would like it to go on the back of the home which ran parallel to Hope Street where there was an existing window. Mr. Leonetti said some brick work would have to be done. He had an engineer on site who had no concerns about anything because there were no load bearing walls. His hope was to put it where the window was for functionality and access to the basement. Member Lima asked if it was a metal door and Mr. Leonetti said yes. Chairperson Allen said the site was on the back of the house. Mr. Leonetti said it was on the back of the house on the far side in the back left corner. Alternate Member Camara stated it was marked with an “X” on the map.

Chairperson Allen asked if there was anyone in the audience who wanted to speak for or against the application. Dr. Catherine Zipf came forward to speak.

Dr. Catherine Zipf thanked Mr. Leonetti for withdrawing the portion regarding the shutters. As far as the bulkhead was concerned, she stated the walls were entirely loadbearing. She said the engineer needs to understand that the house has historic brick and not present-day brick and the proper shoring up of the house should be done. Dr. Zipf said it was quite clear that there was not an understanding of how this historic house works as it was very old. She reiterated that the way historic windows worked in a brick house was in fact to recess the window, leave a gap between the casement of the window and the brick wall and fill it with something originally called oakum. She said the reason was for the brick and wood to move with the weather independently from each other and the oakum allows everything to shift and breath accordingly so neither was damaged. Dr. Zipf said Mr. Leonetti needed to recess the window behind the brick, leave a gap, and then caulk or it will fail. She was very worried about the structure of the brick with the wood going over it as he would be entirely depending on the caulk which will fail. She said once it failed the water would get in behind the wood destroying window, trim, and brick. Dr. Zipf said it was a 4-alarm fire. She said it needed to be fixed as quickly as possible. She advised Mr. Leonetti that if he needed an example of how it worked to look at the Historical Society next door as it was done there. She said it wasn't a difficult problem, but it was a difficult to solve with modern materials. Dr. Ziph wished Mr. Leonetti had kept the original windows.

Mr. Leonetti stated the windows were not the original windows. He said the specifications of the windows were provided to the Commission. He understood that the outside trim wasn't discussed, but what was approved and the specifications that were provided were the same. Mr. Leonetti stated in speaking with the manufacturer this was what from a building perspective made the most sense. He stated Member Bergenholtz's concern was more the aesthetics which he understood. He wished that was discussed more because he would have gone with a smaller window as this was the first time doing a project like this. Mr. Leonetti was looking to keep his project moving forward and was frustrated. He stated the casings have been done on the interior and have done a lot of work to the home. He said with a more controlled process this situation could be preventable for the future.

Member Bergenholtz corrected Mr. Leonetti and stated those were the original sashes to the house. Mr. Leonetti said they were not as multiple people said they were not. Member Bergenholtz said they were the original sashes but might not have been the original glass. He asked who the people were that said they weren't the original sashes. Mr. Leonetti stated Pacific Visions was one and other multiple restoration companies that he had brought in to look at the windows and said they were not original. He said there may have been 4 on the back side of the home that were original, but the rest were not. Mr. Leonetti said a lot of the reasoning was that the salt water had deteriorated the windows over time and they were replaced. Member Bergenholtz disagreed.

Member Church stated she agreed with Dr. Zipf about the bulkhead. She asked Mr. Leonetti if he had access to the basement inside the house. Mr. Leonetti said he had a 24-inch access door to the basement inside of the house. Member Church stated that he also had a storage shed in the yard and Mr. Leonetti said yes. Member Church said Mr. Leonetti hadn't indicated the height of the bulkhead. Mr. Leonetti stated the spec sheet was provided for the bulkhead. Member Church said the specifications were provided but there was no indication of which particular bulkhead Mr. Leonetti chose. She objected to Mr. Leonetti cutting into the foundation as Mr. Leonetti didn't indicate the size of the bulkhead he was proposing. Mr. Leonetti apologized to the Commission as he thought he had provided that information to them.

Attorney Teitz stated Mr. Leonetti only provided 4 different bulkhead options but hadn't specified which 1 of the 4 he wanted to use. Mr. Leonetti stated he wanted to use the "O" option. He said it was the option that was the smallest width and that he would look into it further and provide the correct information to the Commission.

Chairperson Allen asked if anyone had any other comments. With no other comments or questions, Chairperson Allen asked for a motion.

Motion by Member Church to deny the installation of metal bulkhead doors on the east elevation because it will destroy the original fabric of the building.

Member Bergenholtz stated caution needed to be made because of the way the home was structurally done. He believed structural engineers needed to come up with a plan to for how the brick wall load was going to be supported. He agreed with Dr. Zipf and believed that a steel beam would be required to make sure the wall wasn't going to cave in. Member Bergenholtz stated he would feel more comfortable if a structural engineer provided plans that would ensure that the wall wasn't going to cave in. He told Mr. Leonetti that he should want a structural engineer to look at it as well as it was a complicated issue. Member Page stated that Mr. Leonetti would need a steel beam to reinforce the brick wall. He wasn't sure what the engineer looked at but he didn't see any way Mr. Leonetti could go forward with installing the bulkhead. Member Page advised Mr. Leonetti that he would have to take window out, replace the brick, and framed it with a steel beam which was not radically difficult, but needed to be done.

Member Bergenholtz seconded Member Church's motion. Chairperson Allen stated Mr. Leonetti would have to wait a year before re-applying for the bulkhead. Member Church withdrew her motion.

Motion by Member Church to continue application #26-53 to the meeting on June 29th regarding the hearing on the bulkhead until Mr. Leonetti obtained a plan from a licensed engineer showing how the bulkhead will be cut into the house and supported. Mr. Leonetti is also instructed to provide the dimensions of the bulkhead he wishes to install; Seconded by Member Bergenholtz.

Voting Yea: Church, Bergenholtz, Allen, Page, Millard, Lima, and Camara

Opposed: None

Motion carries.

Motion made by Member Church to approve application #26-53 regarding the installation of the brick veneer on the front stairs. The brick veneer will be approved by the 2 Project Monitors, Bob Page and Ben Bergenholtz; Seconded by Alternate Member Camara. (Standard 9)

Voting Yea: Church, Allen, Lima, Page, Bergenholtz, Millard, and Camara

Opposed: None

Motion carries

Secretary of Interior Standards: 9

Project Monitor: Ben Bergeholtz and Bob Page

Motion made by Member Church to continue application #26-53 regarding the discussion on the windows to the meeting on June 29th; Seconded by Member Lima.

Voting Yea: Church, Lima, Camara, Allen, Millard, Bergenholtz, and Page

Opposed: None

Motion carries.

Mr. Leonetti advised the Commission that he felt ambushed at the last meeting with regard to the window issue as they had been installed for 4 months. He asked the Commission what they needed from him to continue to move everything along as all of the work was already done. Chairperson Allen suggestion that the Commission look at the minutes which would provide some information. Attorney Teitz said the Commission would contact Mr. Leonetti before the next meeting. Mr. Leonetti wanted to get it resolved. Chairperson Allen stated there were still questions about it and whether or not there was information in the minutes that would show it was something that either the Commission overlooked or wasn't communicated clearly. Member Lima said having the 2 Project Monitors observing might help facilitate what Mr. Leonetti needed to do.

Mr. Leonetti felt like there was a double standard in the sense of the Commission asking Mr. Leonetti to do his due diligence, which he did as far as speaking with the contractor, manufacturer, and lumber yard. He also did his due diligence in speaking with restoration companies and having a site visit, but he couldn't comprehend why none of the minutes were reviewed and now the Commission was asking him to continue the matter. Mr. Leonetti was hoping this was going to spark positive changes for the process in the future. He suggested for any future projects that some sort of a neutral arbitrator would get

brought in to do a full assessment of windows. He said it could be revenue generating as an applicant would have to pay for an assessment regarding how many windows it would include, the condition of the windows, grading, etc. Mr. Leonetti said it would provide full clarity and transparency to what's existing. Attorney Teitz felt it was a good suggestion and would follow-up on it. He said they have reached out to the RI Historic Preservation and Heritage Commission who have historic preservation architects on staff. Attorney Teitz stated one of them have come to Bristol to look at another property and maybe she could look at Mr. Leonetti's property in order to give him another opinion as to whether it was dangerous or not, detrimental or not to the building. He would let Mr. Leonetti know.

Attorney Teitz stated Mr. Leonetti ignored the rules in the historic district that all exterior modifications needed to be approved by the Commission. He said Mr. Leonetti's contractor took the position that there was nothing specifically stated about the trim so he felt he could change it. That was the big concern and that's what the Commission wanted to review with the minutes. Attorney Teitz said they would ask someone from the State to look at Mr. Leonetti's property.

Mr. Martins took issue with what Attorney Teitz said. He did a house on Thames Street 2 years ago where the owner replaced all of the windows except the front windows. Mr. Martins said there was no oversight and trimmed the windows in the way they thought the windows should be trimmed. He stated that no one from the Commission came and said it was done wrong. Member Church asked if it was a brick house and Mr. Martins said no. Attorney Teitz stated that was the difference. He said one of the options the Commission looked at was not to approve the replacement of the windows on the street frontages because Mr. Martins had just mentioned he replaced all of the windows on the other house except the front windows.

Attorney Teitz said he would be in touch with Mr. Leonetti before the next meeting.

5C. 26-55: 10 High St, Pam and Rusty Mirick Discuss and act on addition of overhang and door landing changes, construction of patio and pergola, and movement of A/C unit.

Member Millard recused.

Pam Mirick, Rusty Mirick, and Dean Nadalin were present.

Mr. Mirick presented the elements of the application and a discussion commenced with the Commission. He mentioned that an A/C unit was going to be moved in connection with construction of the patio and Nick advised the Commission that Mr. Mirick's mechanical contractor applied for the moving of the A/C unit. He said it was administratively approved as it was far away from street frontage.

Dean Nadalin, the general contractor, addressed the Commission next. Mr. Nadalin discussed the pergola cover over the side door in the driveway and the blue stone patio with a pergola located on the south side. He said for the pergola columns, they wanted to mimic the column that existed on the house which was located on the covered porch. Chairperson Allen asked if the columns were wood and Mr. Nadalin said yes. Member Lima asked where it was going to be located. Mr. Nadalin stated there was an AI generated image of what it was going to look like in the packet and it was going to be located in the southwest corner of the house. Member Lima said it was located on the Lobster Pot side of the house. Member Church stated it would be like the porch on the other side of the house and Mr. Nadalin said the columns would be mimicked. Member Lima asked if the roof of the pergola was going to be lattice. Mr. Nadalin said it would be a regular pergola roof with smaller beams going across. Member Lima stated the Commission needed the specific information for the pergola rather than just an AI generated idea. Chairperson Allen asked Mr. Nadalin if it was going to be similar to photograph that was provided in the packet and Mr. Nadalin said yes. Mr. Nadalin said the photograph was of 9 Church Street's pergola and that's what the Miricks' pergola was going to look like.

Alternate Member Camara asked if the blue stone patio was going to be raised. Mr. Nadalin said the patio was going to be on grade. Alternate Member Camara asked Mr. Nadalin where the air handler going to be relocated. Mr. Nadalin stated it was going to be relocated around the corner of the sunroom, and some bushes were going to be moved which would also block the view. Chairperson Allen said that the air unit was not visible from the street and Mr. Nadalin said that was correct.

Attorney Teitz asked Mr. Nadalin if there was a door to the patio and Mr. Nadalin said no.

Chairperson Allen asked if there was anyone in the audience who wished to speak for or against the application. No one came forward.

Motion made by Alternate Member Camara to approve application #26-55 as presented; Seconded by Member Bergenholtz.

Voting Yea: Camara, Bergenholtz, Church, Allen, Lima, and Page

Opposed: None

Motion carries.

Secretary of Interior Standards: 9

Project Monitor: Ory Lima

5D. 26-62: 15 Church St, Deborah Appleyard Discuss and act on making removal of shutters permanent.

No one showed up.

Motion made by Member Church to continue the application to the June 29th meeting; Seconded by Alternate Member Camara.

Voting Yea: Lima, Allen, Page, Millard, Church, Bergenholtz, and Camara

5E. 26-66: 31 Bradford St, Mark Shaw Discuss and act on addition of sign.

Mark Shaw was present.

Mr. Shaw presented his application to the Commission. The Commission had a brief discussion. Chairperson Allen asked if there was anyone in the audience who wished to speak for or against the application. With no one coming forward to speak, Chairperson Allen asked for a motion.

Motion made by Member Bergenholtz to approve application #26-66 as presented; Seconded by Member Lima.

Voting Yea: Bergenholtz, Lima, Millard, Church, Allen, Camara, and Page

Opposed: None

Motion carries

Secretary of Interior Standards: 9

Project Monitor: John Allen

5F. 26-54: 244 Metacom Ave, Andrew Broten Discuss and act on removal of stone structure and continued installation of stairway.

Mr. Broten was present.

Mr. Broten presented his application regarding the stone house to the Commission. He stated that Nick mentioned doing a site visit. Nick said the Commission was going to have the State go to the property for a site visit. He advised Mr. Broten the State will be able to provide their expertise. Nick said there was a photograph of the dairy barn/stone house in the packet from late 1890s. He asked the Commission if they wanted to wait to decide on the demolition of the structure until the State had a chance to look at it. Chairperson Allen felt that was a good idea. Mr. Broten said he was available whenever the State was available for a site visit.

Mr. Broten said the missing information regarding the specifications for the porch stairs had now been provided in the packet. He said it was going to be a simple wooden staircase to match the style on the other side. He stated the design was in the packet for the Commission's review.

Chairperson Allen asked Mr. Broten if those were the last items that needed to be done and Mr. Broten said yes, for now. Mr. Broten asked if there was going to be a continuance on the stone house. Nick stated he would attempt to have quorum for a site visit.

Attorney Teitz advised Mr. Broten and the Commission that he didn't expect that they would get an immediate answer from Elizabeth Totten, the architect from the State. He said she would look at the structure then go back and put something in writing. Attorney Teitz didn't think there would be a vote on it that day. He said Mr. Broten would be provided with a copy of whatever Ms. Totten drafted, but for the time being the matter should be continued to the next meeting. Mr. Broten understood and was fine with it.

Member Bergenholtz asked Mr. Broten if seeing the photograph changed his opinion on the structure. Mr. Broten appreciated the history but after speaking with a couple of masons, the cost to rehabilitate the building would be too much. He said they may end up fencing it off for now as he didn't want any kids climbing on it.

Chairperson Allen asked if there was anyone in the audience who wanted to speak for or against the application. No one came forward to speak.

Motion made by Member Page to approve application #26-54 with regard to the addition of a wooden stairway as presented; Seconded by Member Church.

Voting Yea: Page, Church, Millard, Camara, Bergenholtz, Allen, and Lima

Opposed: None

Motion carries

Secretary of Interior Standards: 9, 10

Project Monitor: Robert Page

Motion made by Member Page continue application #26-54 with regard to the stone building demolition pending a visit from the State historic architect to the June 29th meeting; Seconded by Member Church.

Voting Yea: Church, Page, Lima, Allen, Camara, Millard, and Bergenholtz

Opposed: None

Motion carries

5G. 26-45: 721 Hope St, Mosa Al Zowelei Discuss and act on additions to existing garage to construct an ADU.

Olivia Spence Architect was present.

Ms. Spence presented the application on behalf of Mr. Al Zowelei to the Commission. She presented the same 2 options as previously discussed but each now has 2 roof options, that being, gabled and flat. She provided elevations and renderings for each option. A discussion commenced with the Commission. Chairperson Allen stated he wasn't at the last meeting and asked about the consensus on the cantilever. Member Bergenholtz said he was against it. Member Page stated he liked it, but others did not. Chairperson Allen felt the cantilever wasn't appropriate.

Ms. Spence felt the cantilever wasn't appropriate but had to go with what the client wanted for an option. She asked if the Commission had any authority to work with the Zoning Department at all as the cantilever came from the fact that the 2 floors above were offset to stay within the setback to reduce what was needed ask for from zoning. Ms. Spence asked if there was any way they could build over the existing footprint and use that square footage, it would be a great opinion. Attorney Teitz stated the Commission didn't have any leverage with the Zoning Board. He said there were modifications that could be approved administratively and there were dimensional variances that could be obtained from the Zoning Board. Attorney Teitz said the only thing the HDC's view was relevant as evidence before a permitting thing would be a case for flood zones and there are specific things where flood zone requirements can be for historic preservation. He said as far as other things go, the Commission couldn't do anything about the Zoning Board. Attorney Teitz said they were putting a lot of stuff on a small lot and that's the concern they were facing as far as the historic aesthetic.

Ms. Spence said it was a balancing act to give the client what he was looking for while trying to please the Commission and the Zoning Board. Hypothetically assuming the 1st option was approved, page A1-3, where the 5ft offset to stay within the zoning setbacks was located,

Ms. Spence asked if it was possible to also have the design with that extra 5ft approved knowing that they would go in front of Zoning and Zoning could potentially not approve of it just so they would have the opportunity to present it to the Zoning Board. She was content with the design, but the homeowner was trying to maximize his square footage, and she just wanted to help him.

Member Bergenholtz asked Ms. Spence which option she was trying to get approved. Ms. Spence stated the client wanted the 6ft cantilever option approved and didn't have a preference about the roof style. She said the options came from the concept review meeting.

Chairperson Allen polled the Commission about cantilever. Member Page was fine with it but understood the objections. Member Bergenholtz was against the cantilever. Member Lima was against it. Alternate Member Camara agreed with Member Page but preferred no cantilever. Member Millard wouldn't object to the cantilever if it could be hidden somehow. Member Church was against the cantilever.

Ms. Spence said the cantilever was not her favorite idea. Looking at the 1st option, she asked the Commission which roof style they preferred. Ms. Spence said the flat roof was originally presented as it kept the height down as much as possible. She stated the gabled roof was presented because the existing structure had a gabled roof and, to her, it felt more historical looking, but it added height to the structure. Ms. Spence said the options were located on pages A1-3 and A1-4 for the gabled roof and A2-3 for the flat roof.

Member Church liked the gabled roof but objected to the dormer on A1-3. She stated the dormer was vertically in line with main part of the building and it should be stepped back at least a foot. Member Church said it was stepped back from the north/south end but not from the east/west end. Ms. Spence said it was due to spacing and that it was mostly from a construction and structural standpoint because of the way the new joist in the garage ceiling was going to be placed and the way the loadbearing wall was going to be set back 5ft. Member Page stated the dormer couldn't be set back. Ms. Spence said she continued the gabled soffit on the east side.

Ms. Spence stated if the application was approved, zoning was going to be another hurdle for them and then figuring out the engineer as to what the existing foundation was doing was a whole other thing the homeowner will need to address. She said it might get to a point where the homeowner doesn't want to do it.

Member Bergenholtz asked if the dormer could be set down from the roof ridge as it was currently giving a contemporary look. He said by stepping it down slightly and carrying it over would look great. Ms. Spence said on page A1-5, she did continue the soffit line across and made the dormer on the east side smaller as well. She stated she could continue the soffit along the west side as well. She wanted to present it in this manner to preserve as much visual connection to the water as possible. Ms. Spence said she could get egress windows on each gable end and rework the floor plan to make it work. Member Bergenholtz said he liked where the design was going.

Chairperson Allen polled the Commission regarding their preference of the style of roof, and all voted for a gabled roof. Member Church stated there was a flat roof right next to it but that was a later addition, and she wouldn't want to emphasize it by making the new construction a flat roof as well.

Alternate Member Camara asked about the proposed railing regarding cable versus traditional railings. He asked Chairperson Allen if that was something the Commission needed to approve. Chairperson Allen said the Commission has approved of cable railings before with wood posts, never steel. Ms. Spence said they were wood posts. She stated in A1-4 there was a photograph of a neighbor's railing system at 715 Hope Street. Ms. Spence said the homeowner wasn't set on it. She stated for view's sake, it would be nice, but they were open to alternatives.

Attorney Teitz asked Ms. Spence if they will need to obtain CRMC approval and she said yes. He asked if there were flood vents in the garage floor. Ms. Spence said at this point it was mostly preliminary to make sure they could get the approvals they needed. She stated they haven't obtained a survey as the homeowner wanted to make sure they could move forward before taking other steps.

Chairperson Allen said to Ms. Spence that she wasn't anticipating that the Commission was going to give her their approval on one of the options this evening. Ms. Spence said she would like to see an approval happen but if there were other things that needed to be discussed. Nick said it was a catch-22 where Zoning asked what the HDC said and CRMC asked about what Zoning and HDC say. Chairperson Allen said it might be better to give an approval. Nick said with the assumption that any changes required by CRMC would have to come back to the Commission for separate approval. He said if the HDC doesn't approve of it, then Zoning was going to ask what did the HDC say and so forth.

Attorney Teitz stated it wasn't like others the Commission has delt with CRMC in the flood zone. He didn't anticipate other CRMC requiring anything other than minor changes. He said there may be nothing that requires the Commission's approval and if there is it was likely to be minor details.

Ms. Spence asked if a decision was going to be made one way or the other, and Chairperson Allen believed so. She asked if the Commission were to approve it, did it make sense to do a preliminary approval if they were to take back that 5ft from the deck just to have the conversation with Zoning. She stated Zoning could say no probably would say no, but to give the homeowner the extra square footage would be nice. Member Page said Zoning was going to do whatever they do, but that change wouldn't change it for the Commission. Chairperson Allen asked Member Page if he was suggesting they approve it. Member Page said he was suggesting that approving it with or without the extra 5ft wouldn't be an issue for the Commission. He said they had discussed all of the issues of concern to them. He asked Ms. Spence if they were going to make their decision with the flat or gabled roof. Ms. Spence stated it was the same design on A1-3 and A1-4 just to be 5ft wider to stay over footprint. Member Bergenholtz said it would be with the continuation of the soffit. Ms. Spence said she would continue the soffit and bring the dormer down a foot.

Member Church asked about the materials and stated they didn't have any product sheets for the windows or doors. Ms. Spence said she didn't have the spec sheets for the windows but had the materials list from the last meeting. She stated the exterior would be a wood product with a

painted finish in a similar fashion to the existing house. She talked about doing a shingle as the existing home had shingles; however, the existing home had a 9-inch exposure possibly asbestos shingle. In her example, she showed clapboard as the existing garage had clapboard which would be all wood. Member Church asked about the windows. Ms. Spence said the windows would be possibly Marvin Elevate windows, something that was either wood all the way through or wood interior and a clad exterior. Member Church asked what kind of clad was Ms. Spence considering. Ms. Spence thought it was clad with aluminum but wasn't sure and would check into it.

Member Lima suggested approving the building design and Ms. Spence could come back with a specific window choice for approval. Attorney Teitz advised the Commission to approve the envelope and the basic design and then have them come back for the specific details. Chairperson Allen said to Member Page that the Commission should approve it with and without the deck. Member Page felt the extra 5ft didn't matter to the Commission but rather mattered to the Zoning Board. Chairperson Allen said to Ms. Spence if the Commission gave her their approval without the deck, that would give the homeowner the space he wanted; however, if the Zoning Board said no, it would give the homeowner a fallback position. Ms. Spence said that would be great if it didn't matter to the Commission as she would like to have the opportunity to put it in front of Zoning.

Chairperson Allen asked if there was anyone in the audience who wanted to speak for or against the application. Dr. Catherine Zipf came forward to speak.

Dr. Catherine Zipf stated she really wanted to like it. She said it was a beautiful design, but she had huge reservations with creating a precedence. She feared what could happen with essentially a 3-story garage which is what has been presented. Dr. Zipf worried about how many other garages might all of a sudden be 3 stories tall. She stated it was going to be slightly taller than addition but not taller than the existing house. Dr. Zipf said it was a tower of a structure and was worried about what it could mean for other garages in the area. She said from the district's perspective it's going to be a lot hard to defend.

Member Bergenholtz valued Dr. Zipf's opinion and the reason he would be for the project is this particular area of Bristol has always been considered the compact part of Town. He said things were very close and tall and was okay with it. He said he wouldn't be okay with it if it was something that was farther away from the area. Chairperson Allen asked if that could be something that was put into the decision as a finding of fact.

Ms. Spence agreed with Dr. Zipf about setting a precedence with making the building taller. From what she tends to see in the different zoning ordinances in different towns, the only reason they're allowed this height on an accessory structure is because it's in a W zone. She stated typically in a residentially zoned area, they're not allowed that height. She said she couldn't do something like this in Providence. Member Church stated since it was a compact area and the main house itself because of the flat roof addition was somewhat compromised it wasn't like it was a stand alone lot that had a colonial house with a small horse barn garage. The Commission looks at each area individually and what works for one doesn't necessarily mean it would work for another.

Nick asked Ms. Spence when they were going to go before Zoning. Ms. Spence said she wanted to talk to client as they may not be at a point to do it yet. Nick asked if they were on a meeting date yet and Ms. Spence said no. She said they still needed to get a survey and may go before Zoning in a couple of months.

Attorney Teitz suggested that Ms. Spence take what she's offered now and then come back to amend it if they wanted. Ms. Spence asked what the process was and Attorney Teitz said it would be treated as new design the Commission would have all of the background information. Member Church stated Ms. Spence needed to come back with the list of materials. Ms. Spence asked if the list of materials could come after the zoning approval and Attorney Teitz said yes. Nick said the only thing that was contingent is building permits.

Member Bergenholtz stated the decision should reflect that the dormer was going to be dropped by a foot below the ridge. Ms. Spence said the dormer could go down as much as it needed to and she could make the dormers flat.

Chairperson Allen asked if they didn't have a plan in front of them, could they approve it and Attorney Teitz said yes. Attorney Teitz said that's why they needed to have a plan in front of them. He said the Commission should vote on what was presented on A1-3 and A1-4 and if Ms. Spence wanted to come back with changes, she could. Chairperson Allen said if they approved it, Ms. Spence could do exactly what the plan stated. Attorney Teitz asked if they didn't want to do it. Chairperson Allen said if they approved what they had in front of them, then she didn't have to come back. Attorney Teitz said then the Commission didn't want to approve it now.

Member Bergenholtz said the motion that was presented was that the soffit was going to continue across the west side. Attorney Teitz said there was a difference about a detail like the soffit continuing along as opposed to the basic massing and envelope of the property which is what Ms. Spence was talking about changing. He said she wanted to go out 5ft closer to the property line. Member Page said they weren't going to do that now, just approve it the way it was presented. Member Bergenholtz said also dropping the height of the dormer so it's a foot below the ridge line. Attorney Teitz said to make it clear in the decision.

Motion made by Page to approve application #26-45 based on what is shown on A1-3 and A1-4 with the modification of the soffit to be extended across the west side of the building, with the gabled roof, with a drop of approximately 1ft of the dormer from the center beam of the roof. Finding of fact that the property is in the zone for water intrusion which changes the height of this particular structure and allows for the massing as it is located in the Waterfront Zoning District and to comply with CRMC; Seconded by Camara.

Voting Yea: Page, Camara, Lima, Allen, Millard, Church, and Bergenholtz

Opposed: None

Motion carries.

Secretary of Interior Standards: 9, 10

Project Monitor: (Not specified at the meeting)

5H. 26-67: 99 Bradford St, Carl Pearson Discuss and act on changes to former commercial property to convert to single family home.

Greg Spiess and Carl Pearson were present.

Mr. Spiess presented the application on behalf of Mr. Pearson to the Commission and a discussion commenced. Chairperson Allen asked Mr. Spiess if the windows where true divided lights. Mr. Spiess stated they were dimensional mullions. He said the roof would be set back about 18 inches and lower the slope which was shown in the drawing. They were hoping to obtain the Commission's approval so they could get under way.

Chairperson Allen asked the Commission members if they had any questions. Alternate Member Camara appreciated the design changes with the roof. He stated they did a good job of keeping the spirit of building while making it suitable for residential living.

Chairperson Allen aside if anyone in the audience wanted to speak for or against the application. Dr. Catherine Zipf came forward to speak.

Dr. Catherine Zipf felt it was in the spirit of what was discussed at the previous meeting. She would like to see roof get less prominent, but this was a compromise on it. She raised a concern about what was happening around the windows on the 2nd story. Dr. Zipf said the windows looked a little more federal than they should be. She said the 1st floor still read as a commercial structure that was filled in with windows and it was done beautifully, but the 2nd story looked too Georgian to her. Dr. Zipf asked if the lintels could look less robust and look more commercial since it was a commercial building and they wouldn't want to Georgianize it too much. She said it was something to consider.

Mr. Spiess said they could look at the trim. He said it was a 1900s building moving into the craftsman era and perhaps they could find a transition trim. He stated they would revisit it. Mr. Spiess said in some ways this building was responding to the buildings around it. He hopes that could be done with the Project Monitor and not hold the project up.

Member Church asked if there was a design for the door? Mr. Spiess gave the product sheet to the Commission. Member Church asked if it was an all wood door and Mr. Spiess said yes. Member Bergenholtz advised Mr. Spiess that the selection was not appropriate for the house as it was an arts and crafts style door and the building was not an arts and crafts building. Mr. Spiess said the homeowners liked it and he felt it looked about the same vintage. Mr. Pearson stated they would go with the 6-panel wood door instead. Member Bergenholtz stated it looked like something from California. Mr. Spiess said if it was too much, they would change it. He said the concept submission had a door with 4 lights. Chairperson Allen said they could continue the door selection and they could come back. Member Church said it was a major feature right on the street.

Motion made by Alternate Member Camara to approve application #26-67 as presented. The Project Monitor will work with the homeowners on the project regarding choosing the window trim. The selection of the front door will be continued to the June 29th meeting; Seconded by Member Church.

Voting Yea: Camara, Church, Lima, Page, Allen, Millard, and Bergenholtz

Opposed: None

Motion carries

Secretary of Interior Standards: 9

Project Monitor: John Allen

Mr. Spiess asked if they needed to make a new application for the front door. Nick advised him to provide Nick with the spec sheet for the door, and the updated application information will be placed on the June 29th meeting agenda, and they will have to come back before the Commission to discuss the same. He advised Mr. Spiess that they could start the project, but to not install the new door yet. Nick told Mr. Spiess he was able to begin permitting.

5I. 26-33: 145 High St, Danny Ferreira Discuss and act on demolition of garage, rehabilitation of existing home, construction of addition to existing home.

Daniel Ferreira was present.

Mr. Ferreira presented the application to the Commission. The Commission then had a discussion with Mr. Ferreira.

Mr. Ferreira stated it wasn't what he wanted for the site. It was now going to be a 2-family home with a 2-car garage which would be designed more like a carriage house so a future homeowner could possibly use it as an in-law apartment or live in it and rent the front portion out.

Chairperson Allen was confused by the packet presented. Nick explained the old information was in the front and the new information was started on page A10. Mr. Ferreira stated it featured a yellow house. Nick clarified that the materials proposed from the original submission had not changed, but the design had changed. Mr. Ferreira stated that was correct.

Chairperson Allen stated he didn't understand the design. He asked Mr. Ferreira where the additional 3 units were going to be located. Mr. Ferreira stated that he eliminated the 3 additional units he had originally proposed and now it was just a 2-family home at the front with a 2-car garage with a unit above it. He stated he made a massive reduction and a huge shift in the design to be more in line with what the neighbors were requesting. Mr. Ferreira said it was zoned R-6 for multi-family use. He stated the property across street has a similar design, but his property had more square footage.

Member Church asked about the materials. Mr. Ferreira said the materials list was in the packet. Chairperson Allen said it was all wood. Mr. Ferreira stated the front would be all wood and back portion would be done in Hardie. Chairperson Allen asked about the railings on the porches. Mr. Ferreira said they would be done in wood. Member Church asked about the materials for the windows. Mr. Ferreira stated the windows would be vinyl as the existing home had vinyl windows. Nick said the existing home had vinyl 1 over 1 windows.

Chairperson Allen asked if the information on the windows was in the packet as well. Mr. Ferreira stated it could be seen in the photographs of the existing home. It showed vinyl windows and aluminum gutters. He stated he would be doing an aluminum gutter, but it would be an upgraded version which would look like copper. He said the existing windows were casement windows that didn't look appropriate. Mr. Ferreira said he was going to make them 4 over 4.

Mr. Ferreira stated the existing condition of the home was very poor and he would have to remove the majority of the siding due to rot. He said the back portion completely collapsed and was removed. He has the property stabilized but wants to get moving on it.

Mr. Ferreira said he wanted to remove the remains of the 10-car garage in the back as it was in very poor shape. Chairperson Allen stated Mr. Ferriera would need the Commission's approval to do so. Member Bergenholtz though that was already approved. Mr. Ferreira said the Commission approved the partial removal of the roof structure and whatever else had collapsed. He kept up what hadn't collapsed. He didn't want to do anything further without the Commission's approval.

Chairperson Allen asked if there was anyone in the audience who wanted to speak for or against the application.

Neighbors, Lenny Pansa, Greg Carleu, Sebastian Wordell, Bart Ferris, and Michael Dupont, spoke against the project. While they all appreciated Mr. Ferreira's efforts to clean up the property and reduce the overall size of the project, they still felt the massing was too much.

Dr. Catherine Zipf came up to speak. She commended Mr. Ferreira for coming in and cutting 2 whole units out of his project. She asked Mr. Ferreira about decorative woodwork on the corners of the building and around the doorway. Mr. Ferreira said he would save it if he could as there was a lot of rot in those areas. He didn't want to get rid of it. Mr. Ferreira wanted to recreate the molding the way it existed to keep the esthetics of the home. Dr. Zipf stated it was a working man's cottage which was obvious in the trim around the doorways as it was very basic with no bottoms or corner pieces to create

a whole column. She wanted to point it out to Mr. Ferreira so he would retain those details as it would be easy to replicate. Mr. Ferreira said he would take a lot of photographs. He asked Dr. Zipf for her help.

David Sisson, architect for the project, wanted to explain the zoning issues for the project. He explained some of the decisions that were made in the project. Mr. Sisson stated the property was zoned for multi-family. He said the neighbors were correct that they had some dimensional issue which was a different standard for the Zoning Board. Mr. Sisson stated the dimensional issues were regarding the width of the property and the side setbacks. He said on right hand side of the property, the existing side setback was less than 3ft, approximately 2.8ft. They were improving that side setback such that their addition will align with the existing home. Mr. Sisson said it would go to 6½ ft which would make it better. On the other side, they're required to have 10ft and they're going to ask for 7½ ft. He stated they wanted to do that so people wouldn't have to swerve around the house to get into the garage. He felt it looked better and worked better.

Mr. Sisson said the reason they went wide on the property is for a practical reason, for firefighting reasons. He would have preferred to have gone longer and deeper, but it would become harder to fight a fire on the property. Mr. Sisson said the longer and deeper they went with the project, the fire department would require them to place sprinklers in the house and that would have been a dealbreaker for getting the project done. They worked really hard to keep the height of the addition to be the same as the existing home. He said it was shorter than a lot of the neighbors.

Chairperson Allen asked Attorney Teitz whether or not the Commission could require Mr. Ferreira to build a single family on the property. Attorney Teitz said no, the Commission did not have purview over the use of the property. He stated that the Commission's issues were confined to the historic appropriateness of the physical structures, not how they're going to be occupied. Attorney Teitz said there was an interrelationship with zoning in the fact that if Mr. Ferreira was to put two separate buildings on the property, he would need much more significant relief than if he had one large building. He believes that was Mr. Ferreira's idea

behind keeping it as one building as opposed to putting a whole separate building or detached second structure. Attorney Teitz said that was not the Commission's worry or control. He stated if the Commission was able to justify based on their findings of fact and the historic appropriateness that it was not appropriate with the garage attached and should be farther back as a second structure separated from a historic point of view, then the Commission could do that. Attorney Teitz said it was Mr. Ferreira's issue to deal with Zoning. He advised the Commission to focus on the buildings.

Mr. Sisson advised the Commission that they attempted to go to Zoning, but Zoning said they had to go to the HDC first. Attorney Teitz stated that was the normal practice because the Commission would want the first crack at where the project was going.

Chairperson Allen stated he had previously recommended that the building be pushed back. He felt it should be two buildings. He said it was too much upfront. Chairperson Allen asked Mr. Ferreira how many feet in the current plan was behind the second building. Mr. Ferreira said there was a lot of space towards the back. He said there were a lot of homes in the area that have 7,000sqft lots and most of those lots are covered by homes. He said the property across the street was similar in design and his design was only connected by a breezeway. Mr. Ferreira said he could eliminate the breezeway which would make it two separate buildings. He said breezeways are highly sought after to be able to utilize it and not have to go through lousy weather from the garage to the main home.

Mr. Ferreira said the unit above the garage was in line with ADU specifications. He stated it was meeting all of the guidelines for an ADU, and he didn't need any approval from Zoning or anyone except for the Commission for aesthetics. Mr. Ferreira said he could get it as an ADU instead of a multi-family property, but he would rather do it as a multi-family property for whomever purchases the property. He stated there was plenty of parking on the site. Requirement wise and zoning wise, he has met the obligation. Chairperson Allen asked how many spaces there were for parking. Mr. Ferreira stated there were 2 spaces in the garage and 2 to 5 spaces in the driveway. He said on the left-hand side of the building, there would be a spot for the ADU. Mr.

Ferreira said the main house would have 4 spaces and the ADU had access to 2 spaces which was on the site plan.

Chairperson Allen said the massing was too much for the lot. He suggested moving it back as far as he could. Mr. Ferreira stated he still had the 10-car garage in the back. He said the existing structure did have a lot more space, but that back addition section was torn off and was no longer on the site. Mr. Ferreira said he narrowed that area and made it smaller on the design plan. He stated everyone was commenting that the new design was 3x times the size but that was actually not true. Mr. Sisson stated they actually reduced the lot coverage. Nick stated that Chairperson Allen was referring to the massing of the building itself and not necessarily the lot coverage. Chairperson Allen said a compromise would be for Mr. Ferreira to take building as far back on the lot as he can. He stated the house across the street had the same, but it wasn't connected by a breezeway. Mr. Ferreira said the breezeway wasn't visible due to its angle.

One of the neighbors asked Mr. Ferreira which house he was referring to and Mr. Ferreira stated it was the white house across the street. She stated that was a single-family home he was referring to. Mr. Ferreira stated even if he decided to keep it as a single-family home and decided later to make it an ADU, the house across the street was a 3-story home which was taller than his property. He stated the frontage was the same as his and it has a garage that was close to the 3-story home. Chairperson Allen stated the garage wasn't as tall as the one Mr. Ferreira was proposing on his property. Mr. Ferreira understood as he had a proposed living space above, but it was still within the height requirements.

Chairperson Allen stated he would not be able to vote for the project due to the size of the massing. Member Lima asked Mr. Ferreira what his plans were for the area where the 10-car garage was currently located. Mr. Ferreira stated it would be grass, trees, or a garden space. Member Lima understood what Mr. Ferreira was trying to do but suggested shifting the proposed garage and making everything parallel might not be as difficult for people to grasp and see from the High Street side. She said if stuff was hidden behind the main house, it would still accomplish what Mr. Ferreira wanted to do in terms of

adding on more housing and more garage but not being seen from the street.

Mr. Ferreira said that could be an option to consider; however, the neighbors stated at the previous meeting that they didn't want to see a strip mall. He stated that by shifting the garage it would make it look like a strip mall like he had before, no one is going to be happy. Mr. Ferreira said that no one wants him to put a multi-family home there. He was doing the best he could to please everyone but felt he wasn't getting anywhere and was frustrated. Mr. Ferreira stated the renderings of the white house in the original submission showed exactly that, but the neighbors objected to it. He said if the Commission wanted to give them a decision on that submission or the new option.

Chairperson Allen took a poll of the Commission. Member Bergenholtz appreciated that the dormers were set back but felt they were still too big. He said the dormers looked contemporary, which ruined the original lines of the house. He asked if they could be set back more and less contemporary looking. Member Bergenholtz also made a suggestion was to stake out the site and have a site visit.

Member Page said the garage lining up just made it far more of a wall on that street, but the general historical look was fine. He agreed with turning the garage, so it was all in one line. Alternate Member Camara appreciated Mr. Ferreira cleaning up the property. He felt if the garage was in one line, it could still stay connected, and it would preserve the site line. He said it would preserve the street view. Alternate Member Camara said the design on its face wasn't a bad thing but given the district's nature and given the history of the area, moving it around would preserve the property.

Member Millard appreciated the work Mr. Ferreira put into the project. She agreed with Member Bergenholtz regarding the dormers. She also felt that the side porch was too big, but beyond that, it was doable. She asked how many people would be living there. Mr. Ferreira was going to retain the property, but now it will be sold. He said the main house will have 4 bedrooms, 2 of which being master bedrooms, 1 on each floor. He wasn't sure how many would be living there, possibly 6 to 8 individuals. He stated that everything was designed in

accordance with zoning and there were no more than 4 beds per unit. He designed the house specifically with someone in mind that he knew was interested in buying in the area who had a family of 2 children and their mother-in-law.

Member Church said the massing and scale of the original house bothered her. She asked if the shed dormer in addition could be reduced because it ruins the whole streetscape and personality of the original house with the yellow house design. She agreed with the rest of the Commission about turning the garage. Mr. Ferreira asked if Member Church liked the way the garage was on the white house design and Member Church said yes. Member Church said it preserved the original massing of the house. Mr. Ferreira stated in order for him to do a multi-family space above the garage, he would need to have that style of dormer there to have the living space above.

Attorney Teitz said the concern was with the shed dormer on the original house at the front on both sides. Member Church mentioned the dormer on the addition as well and asked if he could make it 1 dormer. Mr. Ferreira asked Member Church if she would be okay with the white house style. Member Church asked if it would be all one building and Mr. Ferreira said yes. She stated he would have more of a driveway with parking behind it and Mr. Ferreira said yes and he would be able to retain the 10-car garage as well. Attorney Teitz asked to note the pages they were looking at. Member Church stated it was page 216, Option B on Plan A10-2. Attorney Teitz said it was the first 3 elements, the original house, the connector, and the garage, and it wouldn’t include anything beyond that. Member Church said without a dormer. Attorney Teitz stated there wouldn’t be shed dormers on either side, only 2 doghouse dormers on the original house, and no dormer on the connector. Member Church said the porch was fine.

Member Lima agreed with Member Church. Member Page agreed as well. Chairperson Allen thought it would look awful to see a long row of a house. Member Church said the Commission has done it with others. Chairperson Allen said not with that much massing. Member Church said there was an example on Union Street, that being a yellow colonial house. She said they added on a kitchen addition that went into another family type room and

another addition past that which went right down the east side of the property. Chairperson Allen didn't think that house was a good idea either. Member Church stated the homeowner retained the main house, so they knew its time, place, and significance in the district. She said with Mr. Ferreira's yellow design could be any time.

Chairperson Allen asked Mr. Ferreira if he could mask the back buildings. Member Lima asked Mr. Ferreira if he could set them in somehow. Member Church asked if the Commission had a drawing of the dimensions. Mr. Ferreira said the dimension should have been in the packet. Member Lima said she never knew there was a 10-car garage on the property. Mr. Ferreira said it was covered with junk and trees that fell on it. Member Lima said if the addition could be disguised in the same way the garage was, then it might be easier for everyone.

Member Church directed Chairperson Allen to look at page 212. She stated that's what everyone would be looking at from the street. Mr. Ferreira said the only addition that would be beyond the original building would be the 2-car garage as everything else was pre-existing on the property. Chairperson Allen stated no one ever saw the garages. He stated looking down the driveway, it would be like looking at a shopping mall. Mr. Ferreira stated he was trying to avoid that with the second design.

Chairperson Allen stated if he took the back building and moved it as far back as he could on the property, it wouldn't look so massive. Mr. Ferreira said it was a fire safety issue at that point. He was trying to avoid issues like that. He stated the cost significantly increases even more and at that point he would probably walk away from the project. He doesn't want to do that and wants to make it something beautiful. Mr. Ferreira suggested using the white house design and putting arborvitaes along the front portion of it, so as someone is going down the driveway people won't see it. He liked the idea of switching to white house design. Chairperson Allen stated Mr. Ferreira would have to get some very tall arborvitaes for it. Mr. Ferreira understood.

Attorney Teitz stated the Commission was not able to control the plantings. He asked Mr. Ferreira if the arborvitae on the sidewalk was still there and Mr. Ferreira said no. Attorney Teitz stated that's what hid a lot of the area to begin with. He said the Commission

had to look at it by the softscape landscape. Chairperson Allen said he couldn't vote for it if there wasn't some type of masking of the building. Attorney Teitz stated the Commission needed to decide which way to they wanted go. He said one of the suggestions was to stake out the site and perhaps the 2 alternatives could be staked out with different colors for a site visit. Mr. Ferreira stated it was obvious that no one liked the yellow house design, so he wasn't going to stake it out. He liked the idea of the white house design. He was trying to do his best and was just looking for a decision.

Mr. Ferreira also liked the yellow house design. He asked if it would help if there was a breezeway for separation. Chairperson Allen said the breezeway wasn't visible. Mr. Ferreira said the breezeway wasn't visible, but it would add some separation. He said the same idea of the breezeway from the yellow house design could be done with the white house design where the 2-car garage was separated with a breezeway and it would give the illusion of being separated from the street. Mr. Ferreira wanted to keep it connected because people do like to go from the garage to the house while being protected from the elements. He asked the Commission for a consensus so he could come back with designs.

Chairperson Allen polled the Commission. Member Page said he was good with page 212, the top drawing. He understood the idea of further separation with a breezeway. Member Bergenholtz and Member Lima agreed with Member Page. Chairperson Allen was not for any of the options. Member Camara agreed with Member Page. Member Church and Member Millard were okay with it as well.

Dr. Catherine Zipf, referring to page 212, A5 drawings on the top of the page (1 on the right and 1 on the left), asked Mr. Ferreira if he was going to build only those structures. Mr. Ferreira stated it was just those structures with the breezeway to separate the 2-car garage from the pre-existing structure and nothing else. Dr. Zipf stated the existing structure would be more like the design of the yellow house rendering in the sense he would have 2 dormers and Mr. Ferreira said yes. She asked if the 2nd unit would be entirely over the garage. Mr. Ferreira said that was correct. Dr. Zipf said the

main structure would not be a 4-bed home. Mr. Ferreira stated it would go back to a 3-bed dwelling.

Dr. Zipf asked Attorney Teitz if an ADU would still be allowed on the property. Attorney Teitz wasn't sure. Mr. Ferreira said yes but it wasn't his intention to do so. He said the lot was 23,000sqft and he could do a detached ADU, but, again, that wasn't his intention. Attorney Teitz asked Dr. Zipf if she meant if someone else could add one in the future and Dr. Zipf said yes. Attorney Teitz stated it couldn't be a 3-story garage, but theoretically it could be up to a 1,200sqft separate building as long as it met all of the setbacks.

Dr. Zipf advised the Commission it was a good deal. She stated Mr. Ferreira came originally with 4 units and he was now prepared to settle on the original structure and preserve it as much as possible. She said Mr. Ferreira was replacing the addition that was already there with something different but more or less the same while adding a garage and a second unit. Dr. Zipf said it was a good deal from where Mr. Ferreira originally was and encouraged the Commission to accept it. She appreciated there could be further modifications in the future, but what Mr. Ferreira was offering now the Commission should give it significant consideration.

Mr. Pansa voiced his concerns against it. Member Lima stated it was a concept review, and the Commission was not making a decision. Attorney Teitz advised everyone that since substantial changes have been made to the design, no vote was going to be taken without having a plan presented. He stated Mr. Ferreira would have to come back with complete plans.

Mr. Wordell stated Mr. Ferreira kept addressing the 2nd unit as an ADU, but as long as it met the setbacks, he wouldn't have a problem with it. Mr. Ferreira stated that his intent was to not put another ADU structure on the property. He's working on a few things that would prevent that from happening. Mr. Ferreira stated he was in negotiations to reduce the square footage of the lot which would then eliminate the ability to add an ADU.

Attorney Teitz suggested continuing the matter to the next meeting including a site plan. Mr. Ferreira said he would have everything. Nick stated the deadline was June 12th. Attorney Teitz reminded everyone that the next

meeting would be on Monday, June 29th as there wasn't going to be a July meeting.

Motion made by Member Lima to continue application #26-33 to the June 29th meeting; Seconded by Member Church.

Voting Yea: Lima, Millard, Church, Bergenholtz, Allen, Camara, and Page

Opposed: None

Motion carries

5J. 25-12: 125 Hope St, Nancy DiPrete Laurienzo Discuss and act on demolition of existing structure and replacement with new structure.

Alfred R. Rego, Jr., Attorney for the owners, Madeline Melchert, architect, and Dennis DiPrete, civil/environment engineer, were present.

Attorney Rego gave an overview of the application and the Rhode Island Historic Preservation's opinion. Chairperson Allen asked if everything in the packet was from the previous packet. Nick stated everything in the packet was new information but was all based on the previous application.

Dennis DiPrete presented the application to the Commission. The Commission then commenced a discussion. Mr. DiPrete handed out enlarged copies of the plans to the Commission. Chairperson Allen stated the Commission thought they were coming to get approval for the demolition of the building. Mr. DiPrete said the Commission wouldn't approve demolition without seeing new designs. He said there were 2 applications before the Commission this evening; 1) the demolition permit request, and 2) the future design. Chairperson Allen said Mr. DiPrete did an excellent job of putting together something that he could support. However, there were no details about the new building, and the Commission would need that information before they could approve it. Mr. DiPrete said they submitted elevations, materials list, and a report. Attorney Teitz stated there was a May 20th submission. Nick stated it was submitted.

Mr. DiPrete said they still had a long way to go. They still needed to engage CRMC at a higher level, but they needed the Commission's approval. Mr. DiPrete stated the Building Inspector also had to sign an affidavit for the CRMC that the local approvals were in place. He said CRMC gave them a preliminary determination.

Chairperson Allen polled the Commission. Member Page said the new submission answered all of the questions that had been brought up previously. He said it was good as a single family, and it reflected what was there. Member Page was good with it.

Member Bergenholtz stated he liked it as a single family and liked the way it looked from Hope Street. His only reservation was the number of windows that would be seen from the water. He didn't recall that many windows facing the water. Mr. DiPrete said there weren't a lot of windows in the structure, and they wanted to find a compromise. He said the main house had a considerable number of windows, but the model house didn't. Mr. DiPrete stated they were moving some of the living space from the basement to the first floor. They didn't try to get a replica of the house, but rather a historically informed replacement. He said they took the most important elements of the existing structure and tried to envision what people were going to want when living there.

Member Lima agreed with Member Bergenholtz. She said the Hope Street side was very appropriate and understood the need to have a better view of the water but felt having only windows on the water side was a bit too much.

Alternate Member Camara asked Member Bergenholtz which photograph he was referring to and Member Bergenholtz said it was A2-1. Alternate Member Camara asked how many windows there were. Member Bergenholtz said there were 30-40 windows. Alternate Member Camara stated he didn't have as much of an issue with it but understood Member Bergenholtz' point. He said it was too bad original structure couldn't be saved. Member Millard liked the new design very much as she felt like she was looking at the old building. She didn't feel that it had to mimic it exactly, but the massing was good.

Member Church liked the design and the 1-story connection between the 2 buildings. She liked the window

configuration in the rendering. Member Church didn't like the double window on the Hope Street side. Mr. DiPrete stated she was looking at the old design and showed her the current design and stated the window was eliminated.

Attorney Teitz asked if there was a photograph simulation from the water and Mr. DiPrete said no. Mr. DiPrete said looking at it from certain elevations the windows might look more harsh in black & white. He stated looking at it in the photograph rendering, it didn't look harsh. Member Bergenholtz said the back looked non-descript and full of glass. He was concerned with it. Chairperson Allen said it was too much glass on the back. Mr. DiPrete said that maybe a rendering of the back would give the Commission a better understanding of the look. They didn't think it was a high priority to the Commission. Member Bergenholtz stated the Commission was charged with the visual from both the water view and the street view.

Mr. DiPrete made a suggestion to the Commission that the applicant agree to reduce the square footage of the windows by 10-15% along the back. Member Lima stated the Commission would need to see a rendering as they couldn't visualize what 10-15% less would look like. Alternate Member Camara asked if that part of the application affected their request for demolition. Chairperson Allen said yes. Mr. DiPrete said they would extend their request as it was all tied together.

Chairperson Allen said that everyone was happy with the front. He asked Mr. DiPrete the height from ground to top of the peak in the front from both street side visual renderings. Mr. DiPrete said from the 1st floor of the proposed house to the peak it was 31ft. He wasn't sure about the grading in the front because of the flood plain. Chairperson Allen asked the height of the existing house and Mr. DiPrete wasn't sure. He stated the Commission needed to know that information. Chairperson Allen said just from the photographs the proposed building appeared to be about the same height, but they needed to know. Mr. DiPrete said it was a little tall and the architect took it into consideration. He stated he talked to CRMC about moving the structure back a couple of feet further from the street to accommodate that. He will address it when they return for the next meeting.

Member Church asked if the connector would be 1 story, not 2 stories. Mr. DiPrete said it would be exactly as it existed currently. Member Church stated the rendering appeared to show the connector as 2 stories. Madaline Melchert said they made the connector 2 stories once they made it a single-family residence so it could be accessed from both sides. She said it was recessed back and there was a shed roof that mimicked how it existed currently. Member Church asked what it looked like from the water. Ms. Melchert said the connector was glass. Member Church said that changed the whole aspect of it being 2 buildings. Mr. DiPrete said it was designed that way to keep the same look. Ms. Melchert said there was a viewpoint through since it was just a connector.

Member Lima said those were the things they needed to come back with. Mr. DiPrete said it seemed like they were getting closer to the finish line. He reiterated that they would come back with a rendering of the back with less glass. Member Church asked Mr. DiPrete to differentiate the 2 buildings more boldly. Mr. DiPrete asked if there was anything else they needed. Chairperson Allen said they wanted to see the connector in the mock-up. Ms. Melchert asked if they needed a physical model. Nick stated that as long as Mr. DiPrete filed something by June 12th, supplemental items could be presented at the meeting.

Chairperson Allen asked if there was anyone in the audience who wanted to speak for or against the application. Dr. Catherine Zipf came forward to speak.

Dr. Catherine Zipf said she wanted to know how much taller the new building was from the old building. She asked Ms. Melchert if the roof pitch was the same. Ms. Melchert said it was steeper than before but didn’t know by how much and would get that information for the next meeting. Dr. Zipf said the issues with the windows on the back said were due to the style of the house. She stated they should be horizontal not vertical windows. Dr. Zipf said the Commission might feel better about the windows if they weren’t as tall. She remembered the panoramic view through the middle, but it was more of a horizontal window, not floor to ceiling. Dr. Ziph asked for a condition on the demolition permit was for full documentation of what was there. She said there was 100% high integrity contributing building to the historic

district which should be captured and documented before it was demolished. She stated Mary Harrington did it for Mt. Hope High and she would have specifications on the process for them and probably some contractors to recommend. Dr. Zipf would love to see it done. She stated the documentation from Mt. Hope High was placed in both the RI Historical Preservation Society archives and the Bristol Historical Society archives.

Motion made by Member Lima to continue application #25-12 to the June 29th meeting; Seconded by Page.

Voting Yea: Lima, Page, Allen, Millard, Church, Bergenholtz, and Camara

Opposed: None

Motion carries

5. Concept Review

6. Monitor Reports & Project Updates

7. HDC Coordinator Reports & Project Updates

8. HDC Coordinator Approvals

9. Other Business

Chairperson Allen advised the Commission that Peggy Fredericks was nominated by Preserve RI as she needed a letter of recommendation from the Commission. Nick stated he would draft a recommendation letter.

Motion made by Chairperson Allen to write a recommendation letter on behalf of Peggy Frederick; Seconded by Page.

Voting Yea: Lima, Page, Allen, Millard, Church, Bergenholtz, and Camara

Opposed: None

Motion carries

10. Adjourned at 11:02PM

Bristol Historic District Commission

Application for Review of Proposed Work - Printable Application

HDC-26-83	Contributing	June 12, 2026

THIS DOCUMENT IS NOT A SUBSTITUTE FOR A BUILDING, ELECTRICAL, SIGN, MECHANICAL, DEMOLITION, SOLAR OR FENCE PERMIT APPLICATION. THESE PERMITS MUST BE APPLIED FOR AND APPROVED BY THE BRISTOL BUILDING DEPARTMENT BEFORE WORK CAN BEGIN.

Project Address	Assessor's Plat/Lot
61 COURT ST , BRISTOL, RI, 02809	014-0011-000

Applicant	Architect/Engineer	Contractor
Caitlin Frumerie		

Property Owner (If Different from Applicant)	Owner Mailing Address (If different than Project Address)
Sebastion Wordell	

Work Category:	Sign(s)/Landscaping

Description of proposed work:
Fence

Property History

Building Survey Data	
RIHPHC ID #:	BRIS00313
HISTORIC NAME:	
ARCH. STYLE:	Greek Revival
ORIGINAL CONSTRUCTION DATE (est.):	1850 ca
ALTERATIONS TO MAJOR ARCH. SINCE 1978 (Height, Massing, Wall Covering, Trim, Windows. Porches)	
Windows replaced in similar style, with vinyl 6/6 sash.	

Caitlin Frumerie
Applicant's Digital Signature
Date: June 12, 2026

CAI Property Card

Town of Bristol, RI

GENERAL PROPERTY INFORMATION

LOCATION: 61 COURT ST
ACRES: 0.1599
PARCEL ID: 014-0011-000
LAND USE CODE: 01
CONDO COMPLEX:
OWNER: WORDELL, SEBASTIAN J
CO - OWNER:
MAILING ADDRESS: 51 UNION STREET

ZONING: R-6
PATRIOT ACCOUNT #: 809

SALE INFORMATION

SALE DATE: 10/29/2007
BOOK & PAGE: 1402-285
SALE PRICE: 140,000
SALE DESCRIPTION: Property Cha
SELLER: DIAS, MICHAEL

PRINCIPAL BUILDING AREAS

GROSS BUILDING AREA: 3072
FINISHED BUILDING AREA: 1340
BASEMENT AREA: 992
 # OF PRINCIPAL BUILDINGS: 1

ASSESSED VALUES

LAND: $204,900
YARD: $0
BUILDING: $180,400
TOTAL: $385,300

BUILDING EXTERIOR

BUILDING STYLE: Conventional
UNITS: 1
YEAR BUILT: 1840
FRAME: Wood Frame
EXTERIOR WALL COVER: Wood Shngle
ROOF STYLE: Gable
ROOF COVER: Asphalt Shin

BUILDING INTERIOR

INTERIOR WALL: Drywall
FLOOR COVER: Hardwood
HEAT TYPE: BB Hot Water
FUEL TYPE: Gas
PERCENT A/C: False
 # OF ROOMS: 6
 # OF BEDROOMS: 3
 # OF FULL BATHS: 2
 # OF HALF BATHS: 0
 # OF ADDITIONAL FIXTURES: 0
 # OF KITCHENS: 1
 # OF FIREPLACES: 0
 # OF METAL FIREPLACES: 0
 # OF BASEMENT GARAGES: 0

SKETCH

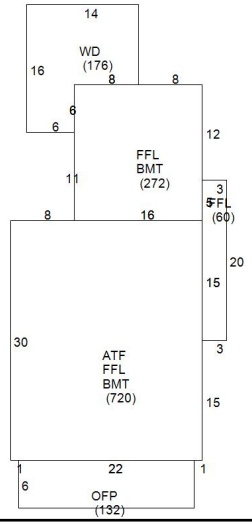

PHOTO



CAI Technologies
Precision Mapping Geospatial Solutions
www.cai-tech.com
This information is believed to be correct but is subject to change and is not warranteed.

Seekonk (2 items)



4 in. x 4 in. x 8 ft. #2 Ground Contact Pressure-Treated Southern Yellow Pine Wood Post

Nominal Product Width (in.): **4 in**

Nominal Product Length (ft.): **8 ft**

$67.08
($11.18/item)

Get Bulk Pricing of $10.06 on this item when you purchase at least 65 units.

6

Pickup at Seekonk | Delivering to 02771

Pickup
Today
538 in stock
FREE

Delivery
Tomorrow
1,470 available

Check Nearby Stores

Get it delivered as soon as tomorrow.
Schedule your delivery in checkout.

Save for Later | Save to List | Remove



3-1/2 ft. x 8 ft. Pressure-Treated Pine Spaced French Gothic Fence Panel

Model #320037

$179.94
($59.98/item)

3

Pickup at Seekonk | Delivering to 02771

Pickup
Today
23 in stock
FREE

Delivery
Tomorrow
71 available

Check Nearby Stores

Get it delivered as soon as tomorrow.
Schedule your delivery in checkout.

Save for Later | Save to List | Remove

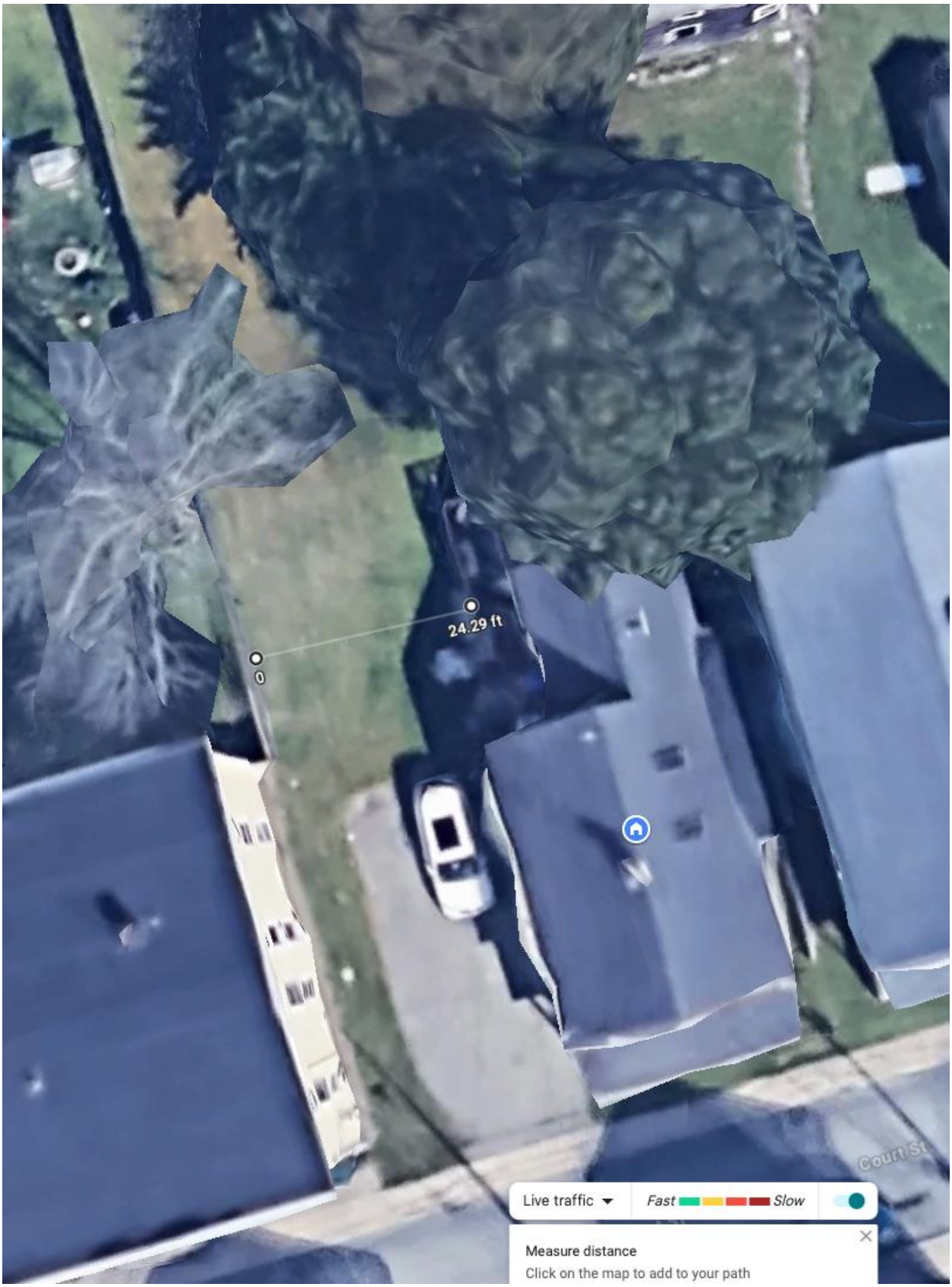
24.29 ft
0
Live traffic
Fast
Slow
Measure distance
Click on the map to add to your path
Court St

Bristol Historic District Commission

Application for Review of Proposed Work - Printable Application

HDC-26-62	Contributing	May 8, 2026

THIS DOCUMENT IS NOT A SUBSTITUTE FOR A BUILDING, ELECTRICAL, SIGN, MECHANICAL, DEMOLITION, SOLAR OR FENCE PERMIT APPLICATION. THESE PERMITS MUST BE APPLIED FOR AND APPROVED BY THE BRISTOL BUILDING DEPARTMENT BEFORE WORK CAN BEGIN.

Project Address	Assessor's Plat/Lot
15 CHURCH ST , BRISTOL, RI, 02809	010-0029-000

Applicant	Architect/Engineer	Contractor
Deborah Appleyard		

Property Owner (If Different from Applicant)	Owner Mailing Address (If different than Project Address)

Work Category:	Remodeling of Structure(s)

Description of proposed work:
Non-original Shutters have been removed and we would like to not replace them.

Property History

Building Survey Data	
RIHPHC ID #:	BRIS00383
HISTORIC NAME:	Warren-D'Wolf House/St. Michael's Church Rectory
ARCH. STYLE:	Federal
ORIGINAL CONSTRUCTION DATE (est.):	1807 ca
ALTERATIONS TO MAJOR ARCH. SINCE 1978 (Height, Massing, Wall Covering, Trim, Windows. Porches)	
Vinyl 6/6 replacement windows.	

Deborah Appleyard
Applicant's Digital Signature
Date: May 8, 2026

CAI Property Card

Town of Bristol, RI

GENERAL PROPERTY INFORMATION

LOCATION: 15 CHURCH ST
ACRES: 0.1246
PARCEL ID: 010-0029-000
LAND USE CODE: 01
CONDO COMPLEX:
OWNER: VAN ALLEN APPLEYARD, DEBORAH
CO - OWNER:
MAILING ADDRESS: 5 MEADOW CIR

ZONING: D
PATRIOT ACCOUNT #: 548

SALE INFORMATION

SALE DATE: 4/20/2022
BOOK & PAGE: 2169-64
SALE PRICE: 800,000
SALE DESCRIPTION:
SELLER: APPLEYARD, BENJAMIN S

PRINCIPAL BUILDING AREAS

GROSS BUILDING AREA: 6260
FINISHED BUILDING AREA: 3198
BASEMENT AREA: 1599
 # OF PRINCIPAL BUILDINGS: 1

ASSESSED VALUES

LAND: $198,500
YARD: $0
BUILDING: $564,900
TOTAL: $763,400

BUILDING EXTERIOR

BUILDING STYLE: Restored His
UNITS: 1
YEAR BUILT: 1807
FRAME: Wood Frame
EXTERIOR WALL COVER: Clapboard
ROOF STYLE: Gable
ROOF COVER: Asphalt Shin

BUILDING INTERIOR

INTERIOR WALL: Drywall
FLOOR COVER: Hardwood
HEAT TYPE: BB Hot Water
FUEL TYPE: Oil
PERCENT A/C: False
 # OF ROOMS: 9
 # OF BEDROOMS: 4
 # OF FULL BATHS: 2
 # OF HALF BATHS: 1
 # OF ADDITIONAL FIXTURES: 0
 # OF KITCHENS: 1
 # OF FIREPLACES: 5
 # OF METAL FIREPLACES: 0
 # OF BASEMENT GARAGES: 0

SKETCH

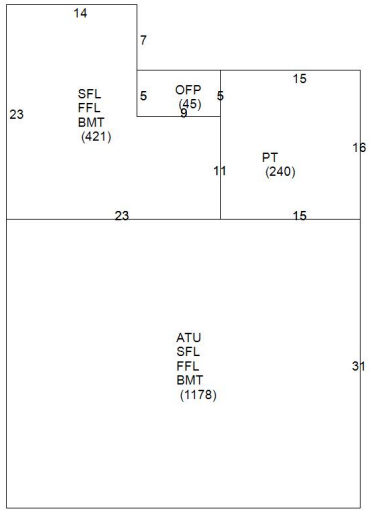

PHOTO











Bristol Historic District Commission

Application for Review of Proposed Work - Printable Application

HDC-26-67	Contributing	May 14, 2026

THIS DOCUMENT IS NOT A SUBSTITUTE FOR A BUILDING, ELECTRICAL, SIGN, MECHANICAL, DEMOLITION, SOLAR OR FENCE PERMIT APPLICATION. THESE PERMITS MUST BE APPLIED FOR AND APPROVED BY THE BRISTOL BUILDING DEPARTMENT BEFORE WORK CAN BEGIN.

Project Address	Assessor's Plat/Lot
99 BRADFORD ST , BRISTOL, RI, 02809	013-0059-000

Applicant	Architect/Engineer	Contractor
C&C Investing LLC	Gregory Spiess AIA	C&C Investing LLC

Property Owner (If Different from Applicant)	Owner Mailing Address (If different than Project Address)
Carl Pearson	6 Peter Pond Court,East Providence RI 02914

Work Category:	Remodeling of Structure(s)

Description of proposed work:

Conversion of a 1900 mised-use struture - 2 story sturcture of 2,178 SF with 2 retail storefronts on ground floor and an apartment above- to a single family dwelling. Site area is approx. 2,522 SF on lots 99-101 on Bracfors street. Work is to include intrior alterations to crat asingle 2 stoey dwelling . Exterior improvements are as follows. Add an attic and pitche roof to existing flat roof structure; remove existing vinyl siding, aluminum windows and wooden storefront windows, and replace with with new red cedar siding, historical replacment windows, and a new, single, front door; repair existing frontage eaves with new sheet metal flashing and wood soffits, and add a new pitched roof with architectural "slateline" asphaltic shingles. Proposed di esign is conistent with accepted Concept B at hthe Concept Revoew on May 7 and this final design package has addrressed May 7th Commisioner comments on lowering the proposed roof slope and height and stepping the roof edge back from front eave/ccornice to accentuate historical horizontal frontage.

Property History

Building Survey Data	
RIHPHC ID #:	BRIS00275
HISTORIC NAME:	Commercial Building
ARCH. STYLE:	Commercial
ORIGINAL CONSTRUCTION DATE (est.):	1900

ALTERATIONS TO MAJOR ARCH. SINCE 1978 (Height, Massing, Wall Covering, Trim, Windows. Porches)

Vinyl siding replaced wood siding.

Applicant's Digital Signature
Date: May 14, 2026

CAI Property Card

Town of Bristol, RI

GENERAL PROPERTY INFORMATION

LOCATION: 99 BRADFORD ST
ACRES: 0.0524
PARCEL ID: 013-0059-000
LAND USE CODE: 04
CONDO COMPLEX:
OWNER: C&C INVESTING GROUP LLC
CO - OWNER:
MAILING ADDRESS: 9 PETER POND COURT

ZONING: LB
PATRIOT ACCOUNT #: 795

SALE INFORMATION

SALE DATE: 10/10/2025
BOOK & PAGE: 2297-9
SALE PRICE: 345,000
SALE DESCRIPTION:
SELLER: FERRARA, PEGGY (50%)

PRINCIPAL BUILDING AREAS

GROSS BUILDING AREA: 3716
FINISHED BUILDING AREA: 2522
BASEMENT AREA: 1178
 # OF PRINCIPAL BUILDINGS: 1

ASSESSED VALUES

LAND: $96,800
YARD: $0
BUILDING: $173,700
TOTAL: $270,500

BUILDING EXTERIOR

BUILDING STYLE: Mixed Use
UNITS: 2
YEAR BUILT: 1900
FRAME: Wood Frame
EXTERIOR WALL COVER: Siding
ROOF STYLE: Flat
ROOF COVER: Asphalt Shin

BUILDING INTERIOR

INTERIOR WALL: Plaster
FLOOR COVER:
HEAT TYPE: Steam w/Boil
FUEL TYPE: Oil
PERCENT A/C: False
 # OF ROOMS: 6
 # OF BEDROOMS: 2
 # OF FULL BATHS: 2
 # OF HALF BATHS: 0
 # OF ADDITIONAL FIXTURES: 0
 # OF KITCHENS: 2
 # OF FIREPLACES: 0
 # OF METAL FIREPLACES: 0
 # OF BASEMENT GARAGES: 0

SKETCH

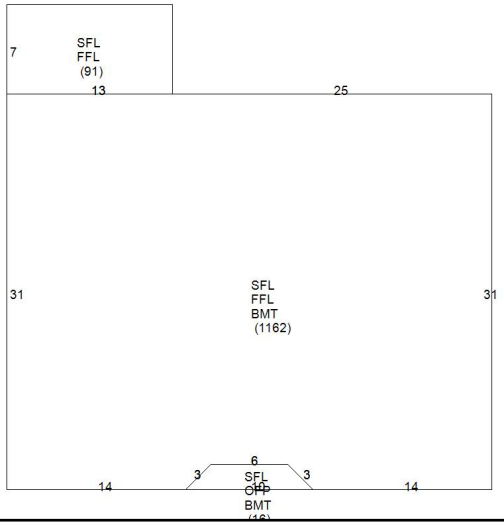

PHOTO



J · H · L
TECTURE
ARCHITECT • ENGINEER, P. C.

190 High Street, Bristol, Rhode Island 02809
Phone: (301) 396-9630 Fax: (401) 410-0079

May 13, 2026

Bristol Historical District Commission
Atten: Nicholas Toth
235 High Street, 1st Floor
Bristol RI 0289

PROJECT DESCRIPTION:	**Project Narrative for HDC Submittal** **Single Family Residence conversion of existing former mixed-use (1) apartment over (2) retail spaces**
PROPERTY ADDRESS:	**99 Bradford Street, Bristol Historic District.**

Historic District Commissioners**:**

JHL Tecture PC, (JHLT) with the new owner of 99 Bradford Street, Carl Pearson, has recently presented alternatives for conversion of a retail building into a single-family dwelling at the Bristol HDC Concept Review on May 7, 2026. This submittal incorporates, in a refined design, the comments and suggestions made at the Concept Review and is here summarized to enable an approved Certificate of Appropriateness.

In summary, proposed concept B was understood by us to gain a consensus from the Commissioners and counsel -especially in terms of maintaining the original retail footprint at the building base and entry alcove. This was proposed to be done in such a manner that the two former doorways were converted to a single front door leading to a new proposed living room and the two flanking former storefront windows would be converted into residential windows aligning and matching the upper windows as two over two divided lite windows. These windows would align with the upper windows on the outer edges and the width adjusted aprox.18 inches to be centered in the historical bays. This enlarged width is conventional in ground floor living room windows. The replacement windows are proposed to be by new Pella historical units of same dimension and style, yet without the former shutters and vinyl siding and with a wider trim common to the 1900s vintage and the adjacent homes on the block. The proposed design will feature cedar clapboard siding of similar dimension (4 inch vertically) exposure to the former vinyl siding and also similar to the adjacent homes..

The only one area where issues were raised by the commissioners was a desire to maintain more of the horizontal nature of the former structure, while understanding the need for a functioning attic and the residential character common in the neighborhood. The “outrigger” overhang eaves of the first and second floor, only found on the Bradford Street frontage, was to be repaired and maintained in similar dimension to the former structure. To accentuate this effect, the proposed pitched attic roof was to be set back from the front edge to help achieve this former horizontality and the roof pitch was lowered and set back from the front face an additional eighteen inches to recede from the frontage. We feel this meets the spirit of the conversation and still provides the function attic and residential character sought by the new owners.

The resulting design presented here in the attached drawings and details fulfills the needs of contemporary adaptive reuse of surplus retail space and provides viable new housing compatible to this historic neighborhood.

PROJECT UNDERSTANDING:

The context of the building situation is that the two-story structure was built in the 1900-1913 timeframe and had two retail units at the ground floor with an apartment above in a format popular to that era. It is on Lots 99 & 101 and is a 2,522 SF, 2-story structure on a 2,178 SF lot. For many years the ground floor commercial spaces housed shops and, notably, for many years, a local barber shop.

The Bradford Street façade features two large wood storefront windows cornice and sidelights flanking an indented, covered entry alcove for the two doorways to each establishment and its connected apartment above in a mixed-use duplex arrangement. A wooden cornice of approximately 18" depth projects over the retail windows (and property line, apparently) and is continuous across the entire front (south-facing) façade.

The upper apartment windows are conventional two over two, double hung units of approximately 32 x 54 inches, matching those of the neighborhood. There is a flat roof (rubber membrane) common to such retail buildings of that time. The structure was clad with a yellow vinyl siding in the late 1980s.

CONCLUSION

The proposed renovation is to create a single-family residence, preserving almost all the framing and footprint of the original building. Interior partitions would be rearranged, including stairways, but the overall volume and footprint would be largely intact.

We feel this process has been fruitful and the design has evolved as we considered the many factors of historical forces and the adaptation to new land uses in the downtown.

We look forward to presenting these details at the June 4th meeting with the HDC and achieving the f go - ahead to construction in a timely manner to take advantage of the favorable building season ahead. We appreciate your cooperation and thoughtful deliberation.

Existing Structure Spring 2026







Proposed conversion

Concept B - refined per comments of May 7, 2026 Concept Review Meetng.



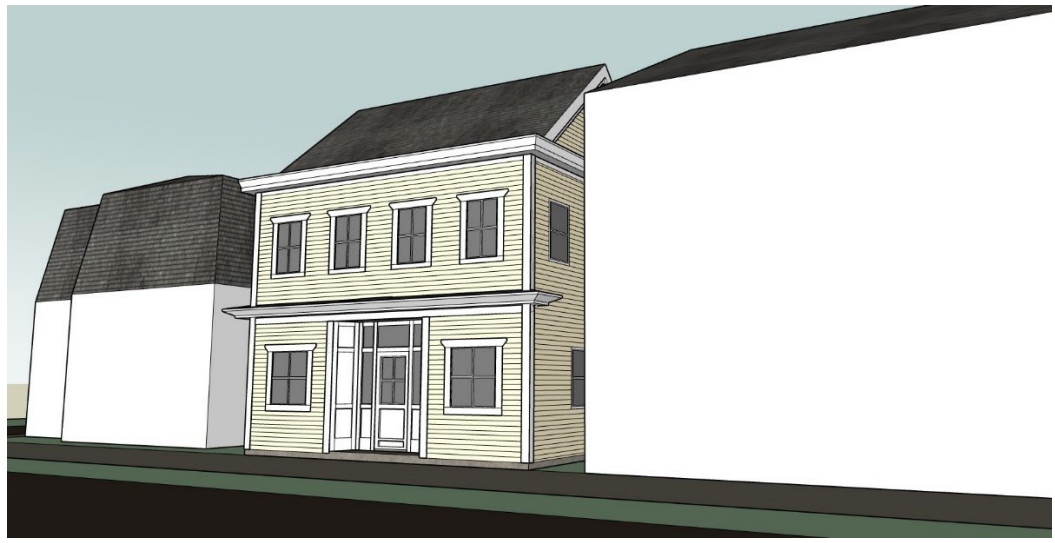



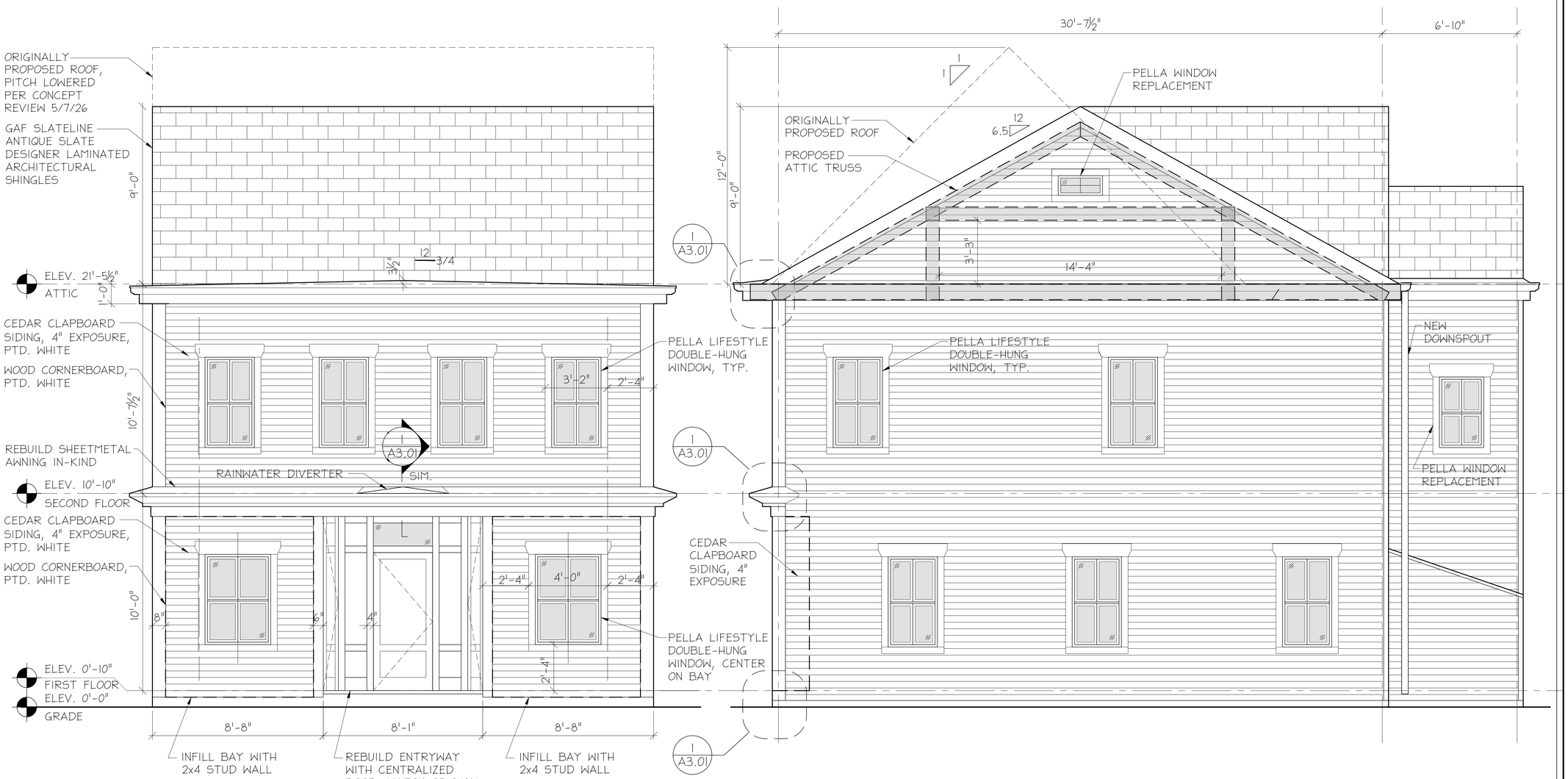

1 A2.01 SOUTH ELEVATION
SCALE: 3/8" = 1'-0"

2 A2.01 EAST ELEVATION
SCALE: 3/8" = 1'-0"

0 2' 4' 8'

GENERAL NOTES:
1: DO NOT SCALE DRAWINGS. Notify Architect if additional dimensioning is required.
2: Contractor shall verify all dimensions in the field and notify Architect of any discrepancies
3: The Contractor shall provide all materials indicated, graphically, as annotated or as needed for a complete and proper installation, and shall notify Architect of any discrepancies in identification of the materials required.
4: Large scale plans of details shall take precedence over smaller scale drawings.
5: All work shall be in conformance with the Federal, State and Local Building Codes and other governing bodies.
6: All work to be performed and inspected as required by the local governing code enforcement office.
7: All work is to be installed in accordance with manufacturer's recommendations and specifications.

COPYRIGHT © 2026 - JHL TECTURE P.C.
DRAWING ALTERATION:
IT IS A VIOLATION OF LAW FOR ANY PERSON, UNLESS ACTING UNDER THE DIRECTION OF LICENSED ARCHITECT, PROFESSIONAL ENGINEER, LANDSCAPE ARCHITECT, OR LAND SURVEYOR TO ALTER ANY ITEM ON THIS DOCUMENT IN ANY WAY.
ANY LICENSEE WHO ALTERS THIS DOCUMENT IS REQUIRED BY LAW TO AFFIX HIS OR HER SEAL AND THE NOTATION "ALTERED BY" FOLLOWED BY HIS OR HER SIGNATURE AND SPECIFIC DESCRIPTION OF THE ALTERATIONS.

#	REVISION DESCRIPTION	DATE	BY
1			
2			
3			
4			
5			
6			
7			
8			
9			

J · H · L
TECTURE
ARCHITECT • ENGINEER, P. C.
190 High Street • Bristol RI 02809
401.396.9630 • Fax 401.410.0079

ISSUED FOR:
REVIEW (05-14-26)

PRELIMINARY ONLY
NOT FOR CONSTRUCTION

THIS PLAN HAS NOT RECEIVED FINAL APPROVAL OF ALL REVIEWING AGENCIES. THIS PLAN IS FOR PROBABLE COST OF CONSTRUCTION ONLY AND IS SUBJECT TO REVISIONS UNTIL ALL APPROVALS ARE OBTAINED AND SHOULD NOT BE USED FOR CONSTRUCTION PURPOSES.

DRAWINGS FOR:
99 BRADFORD

99 BRADFORD STREET
BRISTOL RI, 02809

BUILDING ELEVATIONS

DATE: 05-13-26
SCALE: AS NOTED
DRAWN BY: AM
PROJECT NUMBER: 7517
DRAWING NUMBER: A2.01

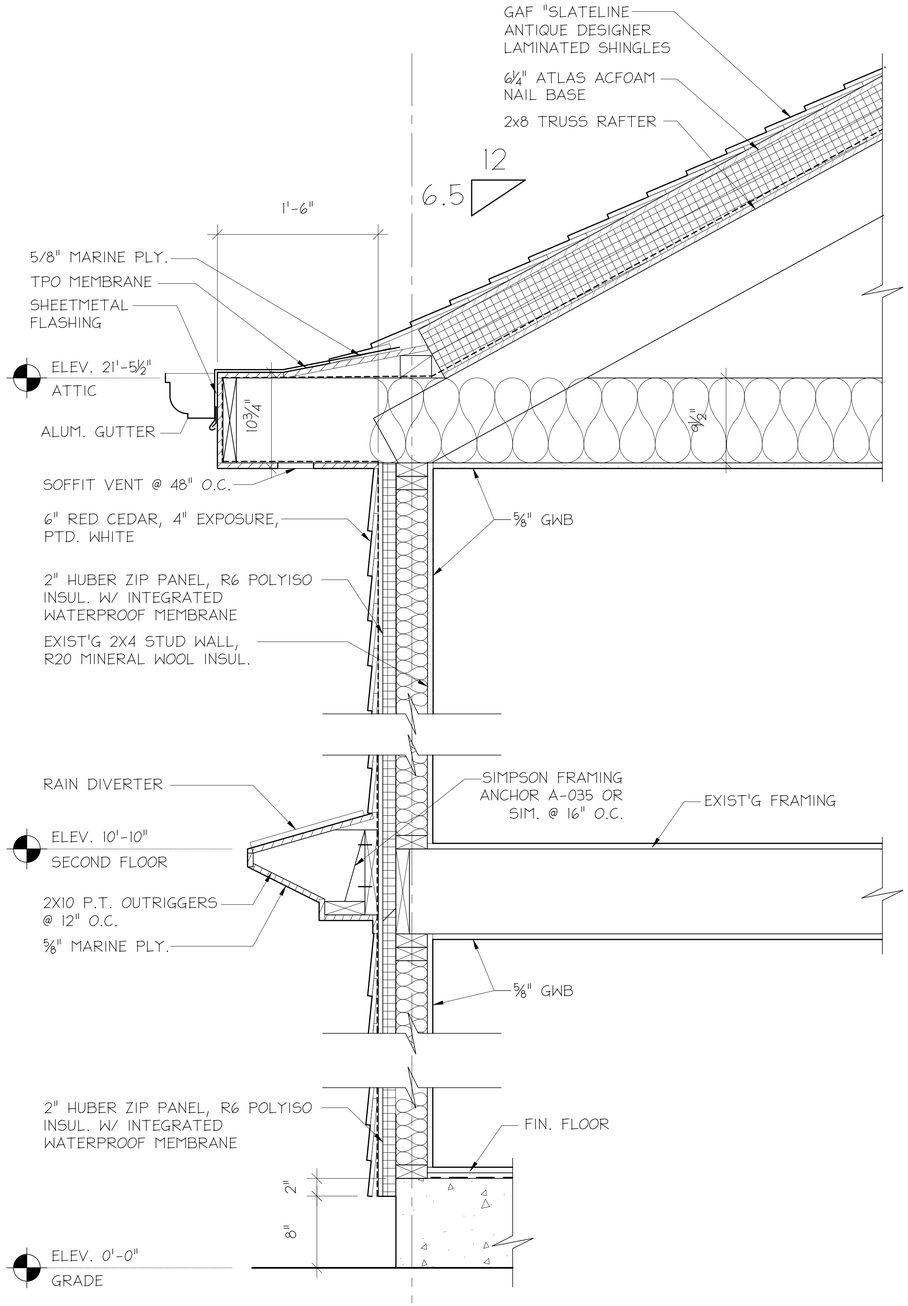

1 A3.01 BUILDING SECTION
SCALE: 1 1/2" = 1'-0"

GENERAL NOTES:
1: DO NOT SCALE DRAWINGS. Notify Architect if additional dimensioning is required.
2: Contractor shall verify all dimensions in the field and notify Architect of any discrepancies
3: The Contractor shall provide all materials indicated, graphically, as annotated or as needed for a complete and proper installation, and shall notify Architect of any discrepancies in identification of the materials required.
4: Large scale plans of details shall take precedence over smaller scale drawings.
5: All work shall be in conformance with the Federal, State and Local Building Codes and other governing bodies.
6: All work to be performed and inspected as required by the local governing code enforcement office.
7: All work is to be installed in accordance with manufacturer's recommendations and specifications.

COPYRIGHT © 2026 - JHL TECTURE P.C.
DRAWING ALTERATION:
IT IS A VIOLATION OF LAW FOR ANY PERSON, UNLESS ACTING UNDER THE DIRECTION OF LICENSED ARCHITECT, PROFESSIONAL ENGINEER, LANDSCAPE ARCHITECT, OR LAND SURVEYOR TO ALTER ANY ITEM ON THIS DOCUMENT IN ANY WAY.
ANY LICENSEE WHO ALTERS THIS DOCUMENT IS REQUIRED BY LAW TO AFFIX HIS OR HER SEAL AND THE NOTATION "ALTERED BY" FOLLOWED BY HIS OR HER SIGNATURE AND SPECIFIC DESCRIPTION OF THE ALTERATIONS.

#	REVISION DESCRIPTION	DATE	BY
1			
2			
3			
4			
5			
6			
7			
8			
9			

J · H · L
TECTURE
ARCHITECT • ENGINEER, P. C.
190 High Street • Bristol RI 02809
401.396.9630 • Fax 401.410.0079

ISSUED FOR:
REVIEW (05-14-26)

PRELIMINARY ONLY
NOT FOR CONSTRUCTION

THIS PLAN HAS NOT RECEIVED FINAL APPROVAL OF ALL REVIEWING AGENCIES. THIS PLAN IS FOR PROBABLE COST OF CONSTRUCTION ONLY AND IS SUBJECT TO REVISIONS UNTIL ALL APPROVALS ARE OBTAINED AND SHOULD NOT BE USED FOR CONSTRUCTION PURPOSES.

DRAWINGS FOR:
99 BRADFORD

99 BRADFORD STREET
BRISTOL RI, 02809

BUILDING SECTIONS

DATE: 05-12-26
SCALE: AS NOTED
DRAWN BY: AM
PROJECT NUMBER: 7517
DRAWING NUMBER: A3.01







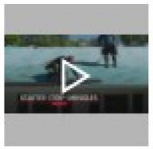

SHOP MEMORIAL DAY SAVINGS >

GAF

Slateline Antique Slate Designer Laminated Architectural Shingles (33.3 sq. ft. per Bundle) (16-pieces)

4.5 (40) Questions & Answers (25)

Covers 33.33 sq.ft.

$75.14 ($2.25 /sq.ft.)

- Diamond cut granules add dimension and depth to shingles
- Micro weave core helps resist cracking and splitting
- UV blocker protects against damaging sunlight for durability
- View More Details

Color/Finish: **Antique Slate**

Pickup at Somerset Delivering to 02726

Ship to Store **Delivery**


Lifetime Shingles
Roof Deck Protection
Leak Barrier
Starter Strip Shingles
Cobra® Attic Ventilation
Ridge Cap Shingles
GAF
GAF
GAF
GAF

Lifestyle Series Double-Hung

Product Selection Guide
- Size and Performance Data LS-DH-2
- Features and Options LS-DH-3

Combination Assemblies LS-DH-4

Glazing Performance
- Vent Units LS-DH-6
- Fixed Units LS-DH-8

Grille Types LS-DH-10

Size Tables
- Double-Hung with Removable Grilles LS-DH-11
- Fixed and Transoms with Removable Grilles LS-DH-12
- Double-Hung with GBG's and SDL's LS-DH-13
- Fixed and Transoms with GBG's and SDL's LS-DH-14
- Replacement Sizes with Removable Grilles LS-DH-15
- Replacement Double-Hung with Removable Grilles LS-DH-16
- Replacement Sizes with Grilles-Between-the-Glass LS-DH-17
- Replacement Fixed with Removable Grilles LS-DH-19

Special Sizes and Dimensions LS-DH-21

Design Data
- Vent Units LS-DH-22
- Fixed and Transoms LS-DH-23
- Replacement Double-Hung Venting LS-DH-24
- Replacement Fixed and Transoms LS-DH-26

Detailed Product Description LS-DH-27

Unit Sections LS-DH-28

Document Navigation Tips:

Items listed in the table of contents above are active links that will take you to the corresponding page.

Supporting documents for this product:

Test Reports:
https://media.pella.com/professional/adm/CertificationReports/Test_Reports_LS-Dual.pdf

CSI Specs (readable using Microsoft Word or other text editing application):
https://media.pella.com/professional/adm/Wood-CSI_Specs/08552.rtf

Detailed Product Description (readable using Microsoft Word or other text editing application):
https://media.pella.com/professional/adm/Clad-Wood-LS/PellaLifestyleSrs-DH_DPD.rtf

Size Tables (requires appropriate CAD software to read and use):
https://media.pella.com/professional/adm/Clad-Wood-LS/LSCDHE_D.dwg

CAD cross sections (requires appropriate CAD software to read and use):
https://media.pella.com/professional/adm/Clad-Wood-LS/LS-DH_XSEC_D.dwg

3D & BIM (requires appropriate software to read and use):
https://media.pella.com/professional/adm/RevitFiles/LS-Revit/Window-Double-Hung-Pella-Lifestyle_Series.zip

Sketchup (requires appropriate software to read and use):
https://media.pella.com/professional/adm/Clad-Wood-LS/PellaSKP_LifestyleSeries_Double-Hung.zip

Combination Recommendations:
https://media.pella.com/professional/adm/Clad-Wood/D_Combinations.pdf

Installation Details:
https://media.pella.com/professional/adm/Clad-Wood/F_InstallationDetails.pdf

The information published in this document is believed to be accurate at the time of pub wever, because we are constantly working to improve our products, specifications are subject to change without notice. Consult your local Pella representative for up-to-date pr mation.
Microsoft and Mircosoft Word are registered trademarks of Microsoft Corp.

Lifestyle Series Double-Hung

Size and Performance Data

	Dual-Pane
Sizes	
Standard double-hung vent/fixed sizes	●
Transom sizes	●
Egress sizes	●
Special sizes available	●
Performance [1]	
Meets or Exceeds AAMA/WDMA Ratings	H-LC30-LC50 Hallmark Certified
Air Infiltration (cfm/ft² of frame @ 1.57 psf wind pressure) [2]	0.11
Water Resistance	7.5 psf
Design Pressure	30–50 psf
Other Performance Criteria	
Forced Entry Resistance Level (Minimum Security Grade) [3]	10
Operating Force (lb) Initiate Motion / Maintain Motion (of Hallmark tested size and glazing) [4]	40/40

Sound Transmission Class / Outdoor-Indoor Transmission Class

Product	Frame Size Tested [5]	Glazing System				STC Rating	OITC Rating
		Overall Glazing Thickness	Exterior Glass Thickness	Interior Glass Thickness	Third Pane Thickness (HGP)		
Pella Lifestyle Series Double-Hung	37" x 59"	11/16"	2.5mm	2.5mm	–	27	23
	37" x 59"	11/16"	5mm	3mm	–	31	27

(–) = Not Available

(1) Maximum performance for single unit when glazed with the appropriate glass thickness. See Design Data pages in this section for specific product performance class and grade values.

(2) Published performance data for air infiltration is determined by testing a minimum of four (4) products of NFRC model size. Testing is conducted in accordance with ASTM E283. Air infiltration ratings for products will differ by size. The performance data does not apply to combination assemblies unless noted. Actual product performance may vary for a number of reasons including installation and product care.

(3) The higher the level, the greater the product's ability to resist forced entry.

(4) Glazing configurations may result in higher operational forces.

(5) ASTM E 1425 defines standard sizes for acoustical testing. Ratings achieved at that size are representative of all sizes of the same configuration.

Lifestyle Series Double-Hung

Features and Options

Standard	Options / Upgrades
Glazing	
Glazing Type	
Dual-Pane Insulating Glass	–
Insulated Glass Options/Low-E Types	
Advanced Low-E	SunDefense™ Low-E
	AdvancedComfort Low-E
	NaturalSun Low-E
Additional Glass Options	
Annealed Glass	STC Glazing Options
	Tempered Glass
	Obscure Glass (1)
Gas Fill/High Altitude	
Argon	High altitude (Air-filled only)
Exterior	
EnduraClad® protective finish	–
Cladding Colors	
10 Standard colors (1)	–
Interior (1)	
Unfinished wood	Factory primed
	Factory prefinished paint (1)
	Factory prefinished stain (1)
Wood Types	
Pine	–
Hardware	
Finishes	
Champagne, Matte Black, White or Brown	Oil Rubbed Bronze, Satin Nickel
Sash Locks/Sash Lifts	
Cam-action lock	Sash lifts (2)
Tilt-Wash Cleaning	
Tilt to interior on both sashes	–
Grilles	
Room-side Removable Grilles	
–	Traditional, Custom - Equally Divided
Grilles-Between-the-Glass	
–	Traditional, Prairie, Top Row, Cross, Custom - Equally Divided
Simulated Divided Light with Optional Spacer (3)	
–	Traditional, Prairie, Top Row, Cross, Custom - Equally Divided
Screens	
–	Full-Size InView™ screens and Vivid View® screens

(–) = Not Available
(1) Contact your local Pella sales representative for current color options.
(2) Sold separately for Pella® Lifestyle Series double-hung windows.
(3) Available with Low-E argon-insulated glass only.

Lifestyle Series Double-Hung

Combination Assemblies

Combinations are a great way to create visual interest in any project. A combination is an assembly formed by two or more separate windows or doors whose frames are mulled together by a combination or reinforcing mullion.

Pella window combinations are available in an endless variety of arrangements. Below are available factory-assembled combinations. Some units can be fixed or vent depending on availability. Refer to Combinations section for typical combinations and requirements and limitations related to mulling various combinations.

Contact your local Pella sales representative for more information.

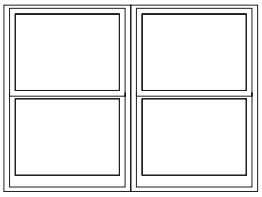

Two-Wide

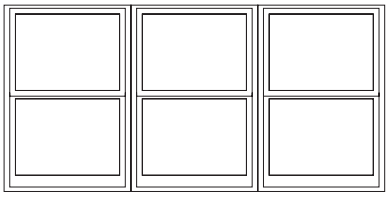

Three-Wide Equal

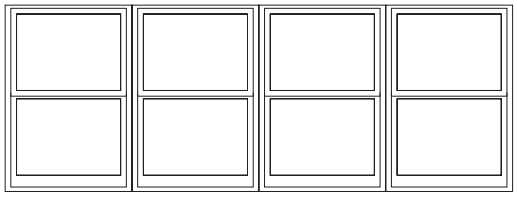

Four-Wide Equal

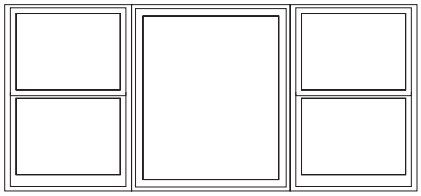

Center Fixed with Flankers

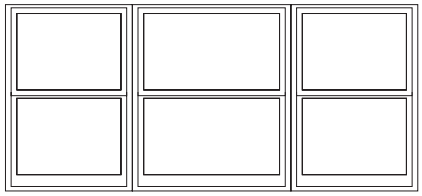

Three-Wide Unequal

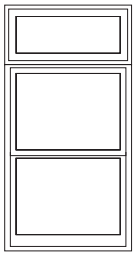

Transom over Single

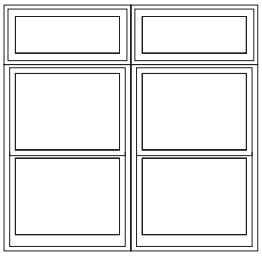

Two-Wide Transoms over Two-Wide

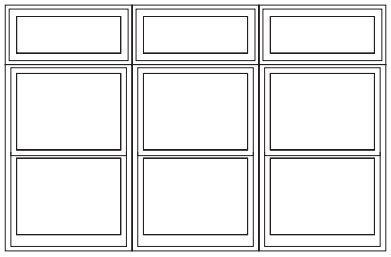

Three-Wide Transoms over Three-Wide

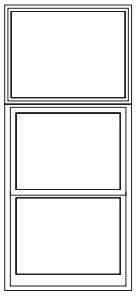

Clad Frame over Single

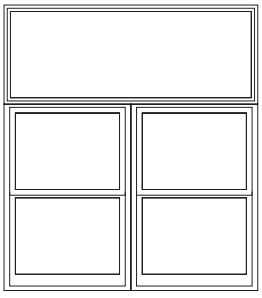

Single Clad Frame over Two-Wide

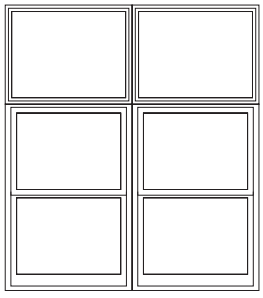

Two Wide Clad Frame over Two-Wide

Lifestyle Series Double-Hung

Combination Assemblies

Combinations are a great way to create visual interest in any project. A combination is an assembly formed by two or more separate windows or doors whose frames are mulled together by a combination or reinforcing mullion.

Pella window combinations are available in an endless variety of arrangements. Below are available factory-assembled combinations. Some units can be fixed or vent depending on availability. Refer to Combinations Section for typical combinations requirements, and limitations related to mulling various combinations.

Contact your local Pella sales representative for more information.

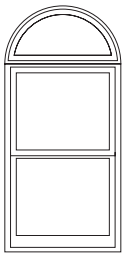

Half Circle over Single

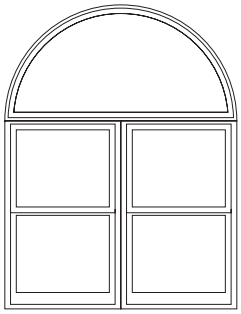

Half Circle over Two-Wide

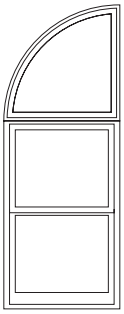

Left Quarter Circle over Single

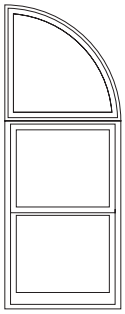

Right Quarter Circle over Single

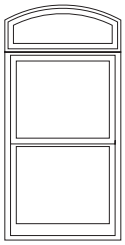

Arch Head over Single

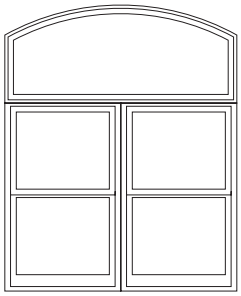

Arch Head over Two-Wide

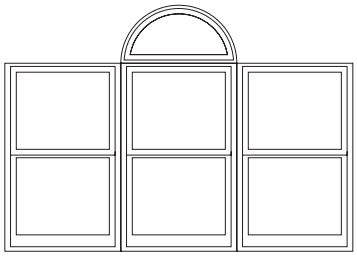

Half Circle centered on Three-Wide Equal

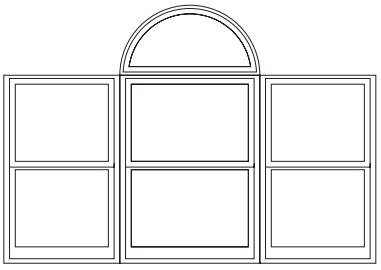

Half Circle over Three-Wide Unequal

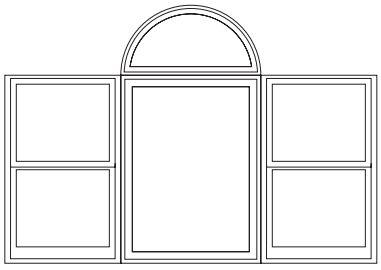

Half Circle over Center Fixed with Flankers

Lifestyle Series Double-Hung

Glazing Performance - Total Unit

Glazing Thickness	Type of Glazing	NFRC Certified Product #	Glass (mm)		Gap Fill	Performance Values [1]				Shaded Areas Meet ENERGY STAR® Performance Criteria in Zones Shown					
			Ext.	Int.		U-Factor	SHGC	VLT	CR	U. S.				Canada [2]	
										Zone				ER	Zone
Dual-Pane Vent										N	NC	SC	S		CA
11/16"	Advanced Low-E IG	PEL-N-35-00362-00001	2.5	2.5	Argon	0.30	0.30	0.57	56		NC				
	with grilles-between-the-glass	PEL-N-35-00363-00001				0.30	0.27	0.50	56		NC				
	with Simulated Divided Light	PEL-N-35-00364-00001				0.30	0.27	0.50	56		NC				
11/16"	Advanced Low-E IG	PEL-N-35-00365-00001	3	3	Argon	0.30	0.30	0.56	55		NC				
	with grilles-between-the-glass	PEL-N-35-00366-00001				0.30	0.27	0.50	55		NC				
	with Simulated Divided Light	PEL-N-35-00367-00001				0.30	0.27	0.50	55		NC				
11/16"	SunDefense™ Low-E IG	PEL-N-35-00386-00001	2.5	2.5	Argon	0.30	0.22	0.52	57		NC	SC	S		
	with grilles-between-the-glass	PEL-N-35-00387-00001				0.30	0.20	0.47	57		NC	SC	S		
	with Simulated Divided Light	PEL-N-35-00388-00001				0.30	0.20	0.47	57		NC	SC	S		
11/16"	SunDefense Low-E IG	PEL-N-35-00389-00001	3	3	Argon	0.29	0.22	0.52	56		NC	SC	S		
	with grilles-between-the-glass	PEL-N-35-00390-00001				0.29	0.20	0.46	56		NC	SC	S		
	with Simulated Divided Light	PEL-N-35-00391-00001				0.29	0.20	0.46	56		NC	SC	S		
11/16"	AdvancedComfort Low-E IG	PEL-N-35-00374-00001	2.5	2.5	Argon	0.26	0.29	0.55	45	N	NC				
	with grilles-between-the-glass	PEL-N-35-00375-00001				0.26	0.27	0.49	45	N	NC				
	with Simulated Divided Light	PEL-N-35-00376-00001				0.26	0.27	0.49	45	N	NC				
11/16"	AdvancedComfort Low-E IG	PEL-N-35-00377-00001	3	3	Argon	0.26	0.29	0.55	44	N	NC				
	with grilles-between-the-glass	PEL-N-35-00378-00001				0.26	0.26	0.49	44	N	NC				
	with Simulated Divided Light	PEL-N-35-00379-00001				0.26	0.26	0.49	44	N	NC				
11/16"	NaturalSun Low-E IG	PEL-N-35-00350-00001	2.5	2.5	Argon	0.30	0.56	0.64	56	N				34	CA
	with grilles-between-the-glass	PEL-N-35-00351-00001				0.30	0.50	0.57	56	N					
	with Simulated Divided Light	PEL-N-35-00352-00001				0.30	0.50	0.57	56	N					
11/16"	NaturalSun Low-E IG	PEL-N-35-00353-00001	3	3	Argon	0.30	0.55	0.63	55	N				34	CA
	with grilles-between-the-glass	PEL-N-35-00354-00001				0.30	0.49	0.57	55	N					
	with Simulated Divided Light	PEL-N-35-00355-00001				0.30	0.49	0.57	55	N					

R-Value = 1/U-Factor
SHGC = Solar Heat Gain Coefficient
VLT % = Visible Light Transmission
CR = Condensation Resistance
ER = Canadian Energy Rating

Climate Zones

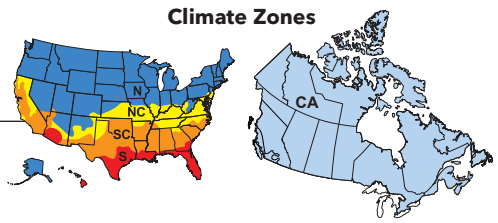

(1) Glazing performance values are calculated based on NFRC 100, NFRC 200 and NFRC 500. ENERGY STAR® values are updated to 2016 (Version 6) criteria.

(2) The values shown are based on Canada's updated ENERGY STAR® 2020 initiative.

See the Product Performance section for more detailed information or visit www.energystar.gov for Energy Star guidelines.

Lifestyle Series Double-Hung

Glazing Performance - Total Unit

Glazing Thickness	Type of Glazing	NFRC Certified Product #	Glass (mm)		Gap Fill	Performance Values [1]				Shaded Areas Meet ENERGY STAR® Performance Criteria in Zones Shown					
			Ext.	Int.		U-Factor	SHGC	VLT	CR	U. S.				Canada [2]	
										Zone				ER	Zone
Dual-Pane Vent - High Altitude Glazing										N	NC	SC	S		CA
11/16"	Advanced Low-E IG	PEL-N-35-00368-00001	2.5	2.5	Air	0.34	0.30	0.57	53						
	with grilles-between-the-glass	PEL-N-35-00369-00001				0.34	0.27	0.50	53						
	with Simulated Divided Light	PEL-N-35-00370-00001				0.34	0.27	0.50	53						
11/16"	Advanced Low-E IG	PEL-N-35-00371-00001	3	3	Air	0.34	0.30	0.56	52						
	with grilles-between-the-glass	PEL-N-35-00372-00001				0.34	0.27	0.50	52						
	with Simulated Divided Light	PEL-N-35-00373-00001				0.34	0.27	0.50	52						
11/16"	SunDefense™ Low-E IG	PEL-N-35-00392-00001	2.5	2.5	Air	0.33	0.23	0.52	53				S		
	with grilles-between-the-glass	PEL-N-35-00393-00001				0.33	0.20	0.47	53				S		
	with Simulated Divided Light	PEL-N-35-00394-00001				0.33	0.20	0.47	53				S		
11/16"	SunDefense Low-E IG	PEL-N-35-00395-00001	3	3	Air	0.33	0.23	0.52	52				S		
	with grilles-between-the-glass	PEL-N-35-00396-00001				0.33	0.21	0.46	52				S		
	with Simulated Divided Light	PEL-N-35-00397-00001				0.33	0.21	0.46	52				S		
11/16"	AdvancedComfort Low-E IG	PEL-N-35-00380-00001	2.5	2.5	Air	0.28	0.29	0.55	42		NC				
	with grilles-between-the-glass	PEL-N-35-00381-00001				0.28	0.27	0.49	42		NC				
	with Simulated Divided Light	PEL-N-35-00382-00001				0.28	0.27	0.49	42		NC				
11/16"	AdvancedComfort Low-E IG	PEL-N-35-00383-00001	3	3	Air	0.29	0.29	0.55	41		NC				
	with grilles-between-the-glass	PEL-N-35-00384-00001				0.29	0.27	0.49	41		NC				
	with Simulated Divided Light	PEL-N-35-00385-00001				0.29	0.27	0.49	41		NC				
11/16"	NaturalSun Low-E IG	PEL-N-35-00356-00001	2.5	2.5	Air	0.34	0.56	0.64	53						
	with grilles-between-the-glass	PEL-N-35-00357-00001				0.34	0.50	0.57	53						
	with Simulated Divided Light	PEL-N-35-00358-00001				0.34	0.50	0.57	53						
11/16"	NaturalSun Low-E IG	PEL-N-35-00359-00001	3	3	Air	0.34	0.55	0.63	52						
	with grilles-between-the-glass	PEL-N-35-00360-00001				0.34	0.49	0.57	52						
	with Simulated Divided Light	PEL-N-35-00361-00001				0.34	0.49	0.57	52						

R-Value = 1/U-Factor
SHGC = Solar Heat Gain Coefficient
VLT % = Visible Light Transmission
CR = Condensation Resistance
ER = Canadian Energy Rating

Climate Zones

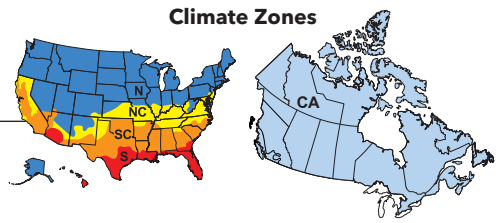

(1) Glazing performance values are calculated based on NFRC 100, NFRC 200 and NFRC 500. ENERGY STAR® values are updated to 2016 (Version 6) criteria.

(2) The values shown are based on Canada's updated ENERGY STAR® 2020 initiative.

See the Product Performance section for more detailed information or visit www.energystar.gov for Energy Star guidelines.

Lifestyle Series Double-Hung

Glazing Performance - Total Unit

Glazing Thickness	Type of Glazing	NFRC Certified Product #	Glass (mm)		Gap Fill	Performance Values [1]				Shaded Areas Meet ENERGY STAR® Performance Criteria in Zones Shown					
			Ext.	Int.		U-Factor	SHGC	VLT	CR	U. S.				Canada [2]	
										Zone				ER	Zone
Dual-Pane Fixed										N	NC	SC	S		CA
11/16"	Advanced LowE IG	PEL-N-229-00861-00001	2.5	2.5	argon	0.27	0.31	0.58	58		NC				
	with grilles-between-the-glass	PEL-N-229-00862-00001				0.27	0.28	0.52	58		NC				
	with Simulated Divided Light	PEL-N-229-00863-00001				0.28	0.28	0.52	58		NC				
11/16"	Advanced LowE IG	PEL-N-229-00949-00001	3	3	argon	0.27	0.31	0.58	57		NC				
	with grilles-between-the-glass	PEL-N-229-00950-00001				0.27	0.28	0.51	57		NC				
	with Simulated Divided Light	PEL-N-229-00951-00001				0.28	0.28	0.51	57		NC				
11/16"	Advanced LowE IG	PEL-N-229-00965-00001	4	4	argon	0.28	0.30	0.57	58		NC				
	with grilles-between-the-glass	PEL-N-229-00966-00001				0.29	0.28	0.51	58		NC				
	with Simulated Divided Light	PEL-N-229-00967-00001				0.29	0.28	0.51	58		NC				
11/16"	SunDefenseTM Low-E IG	PEL-N-229-01045-00001	2.5	2.5	argon	0.27	0.23	0.54	58	N	NC	SC	S		
	with grilles-between-the-glass	PEL-N-229-01046-00001				0.27	0.21	0.48	58	N	NC	SC	S		
	with Simulated Divided Light	PEL-N-229-01047-00001				0.28	0.28	0.51	58		NC				
11/16"	SunDefense Low-E IG	PEL-N-229-01053-00001	3	3	argon	0.27	0.23	0.53	57	N	NC	SC	S		
	with grilles-between-the-glass	PEL-N-229-01054-00001				0.27	0.21	0.48	57	N	NC	SC	S		
	with Simulated Divided Light	PEL-N-229-01055-00001				0.28	0.21	0.48	57		NC	SC	S		
11/16"	SunDefense Low-E IG	PEL-N-229-01061-00001	4	4	argon	0.28	0.23	0.53	55		NC	SC	S		
	with grilles-between-the-glass	PEL-N-229-01062-00001				0.29	0.21	0.47	55		NC	SC	S		
	with Simulated Divided Light	PEL-N-229-01063-00001				0.29	0.21	0.47	55		NC	SC	S		
11/16"	AdvancedComfort Low-E IG	PEL-N-229-00997-00001	2.5	2.5	argon	0.23	0.30	0.57	46	N	NC				
	with grilles-between-the-glass	PEL-N-229-00998-00001				0.23	0.27	0.51	46	N	NC				
	with Simulated Divided Light	PEL-N-229-00999-00001				0.24	0.27	0.51	46	N	NC				
11/16"	AdvancedComfort Low-E IG	PEL-N-229-01005-00001	3	3	argon	0.23	0.30	0.56	45	N	NC				
	with grilles-between-the-glass	PEL-N-229-01006-00001				0.23	0.27	0.50	45	N	NC				
	with Simulated Divided Light	PEL-N-229-01007-00001				0.24	0.27	0.50	45	N	NC				
11/16"	AdvancedComfort Low-E IG	PEL-N-229-01013-00001	4	4	argon	0.24	0.30	0.55	43	N	NC				
	with grilles-between-the-glass	PEL-N-229-01014-00001				0.25	0.27	0.50	43	N	NC				
	with Simulated Divided Light	PEL-N-229-01015-00001				0.25	0.27	0.50	43	N	NC				
11/16"	NaturalSun LowE IG	PEL-N-229-00901-00001	2.5	2.5	argon	0.28	0.58	0.66	57					37	CA
	with grilles-between-the-glass	PEL-N-229-00902-00001				0.28	0.52	0.59	57					34	CA
	with Simulated Divided Light	PEL-N-229-00903-00001				0.29	0.52	0.59	57					34	CA
11/16"	NaturalSun LowE IG	PEL-N-229-00909-00001	3	3	argon	0.28	0.57	0.65	56					37	CA
	with grilles-between-the-glass	PEL-N-229-00910-00001				0.28	0.51	0.58	56						
	with Simulated Divided Light	PEL-N-229-00911-00001				0.29	0.51	0.58	56						
11/16"	NaturalSun LowE IG	PEL-N-229-00917-00001	4	4	argon	0.29	0.55	0.65	55					35	CA
	with grilles-between-the-glass	PEL-N-229-00918-00001				0.30	0.50	0.58	55						
	with Simulated Divided Light	PEL-N-229-00919-00001				0.30	0.50	0.58	55						

R-Value = 1/U-Factor
SHGC = Solar Heat Gain Coefficient
VLT % = Visible Light Transmission
CR = Condensation Resistance
ER = Canadian Energy Rating

Climate Zones

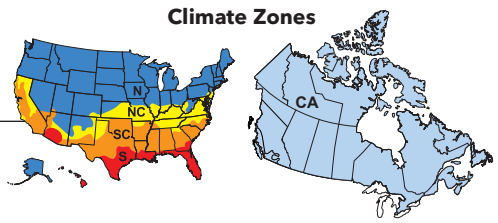

(1) Glazing performance values are calculated based on NFRC 100, NFRC 200 and NFRC 500. ENERGY STAR® values are updated to 2016 (Version 6) criteria.

(2) The values shown are based on Canada's updated ENERGY STAR® 2020 initiative.

See the Product Performance section for more detailed information or visit www.energystar.gov for Energy Star guidelines.

Lifestyle Series Double-Hung

Glazing Performance - Total Unit

Glazing Thickness	Type of Glazing	NFRC Certified Product #	Glass (mm)		Gap Fill	Performance Values[1]				Shaded Areas Meet ENERGY STAR® Performance Criteria in Zones Shown					
										U. S.				Canada[2]	
			Ext.	Int.		U-Factor	SHGC	VLT	CR	Zone				ER	Zone
Dual-Pane Fixed - High Altitude Glazing										N	NC	SC	S		CA
11/16"	Advanced LowE IG	PEL-N-229-00857-00001	2.5	2.5	air	0.31	0.31	0.58	54						
	with grilles-between-the-glass	PEL-N-229-00858-00001				0.31	0.28	0.52	54						
	with Simulated Divided Light	PEL-N-229-00859-00001				0.32	0.28	0.52	54						
11/16"	Advanced LowE IG	PEL-N-229-00945-00001	3	3	air	0.31	0.31	0.58	53						
	with grilles-between-the-glass	PEL-N-229-00946-00001				0.31	0.28	0.51	53						
	with Simulated Divided Light	PEL-N-229-00947-00001				0.32	0.28	0.51	53						
11/16"	Advanced LowE IG	PEL-N-229-00961-00001	4	4	air	0.33	0.31	0.57	51						
	with grilles-between-the-glass	PEL-N-229-00962-00001				0.34	0.28	0.51	51						
	with Simulated Divided Light	PEL-N-229-00963-00001				0.34	0.28	0.51	51						
11/16"	SunDefenseTM Low-E IG	PEL-N-229-01041-00001	2.5	2.5	air	0.31	0.23	0.54	55				S		
	with grilles-between-the-glass	PEL-N-229-01042-00001				0.31	0.21	0.48	55				S		
	with Simulated Divided Light	PEL-N-229-01043-00001				0.28	0.21	0.48	53		NC	SC	S		
11/16"	SunDefense Low-E IG	PEL-N-229-01049-00001	3	3	air	0.31	0.23	0.53	54				S		
	with grilles-between-the-glass	PEL-N-229-01050-00001				0.31	0.21	0.48	54				S		
	with Simulated Divided Light	PEL-N-229-01051-00001				0.32	0.21	0.48	54				S		
11/16"	SunDefense Low-E IG	PEL-N-229-01057-00001	4	4	air	0.32	0.23	0.53	52				S		
	with grilles-between-the-glass	PEL-N-229-01058-00001				0.34	0.21	0.47	52				S		
	with Simulated Divided Light	PEL-N-229-01059-00001				0.34	0.21	0.47	52				S		
11/16"	AdvancedComfort Low-E IG	PEL-N-229-00993-00001	2.5	2.5	air	0.26	0.30	0.57	42	N	NC				
	with grilles-between-the-glass	PEL-N-229-00994-00001				0.26	0.27	0.51	42	N	NC				
	with Simulated Divided Light	PEL-N-229-00995-00001				0.26	0.27	0.51	42	N	NC				
11/16"	AdvancedComfort Low-E IG	PEL-N-229-01001-00001	3	3	air	0.26	0.30	0.56	41	N	NC				
	with grilles-between-the-glass	PEL-N-229-01002-00001				0.26	0.27	0.50	41	N	NC				
	with Simulated Divided Light	PEL-N-229-01003-00001				0.27	0.27	0.50	41	N	NC				
11/16"	AdvancedComfort Low-E IG	PEL-N-229-01009-00001	4	4	air	0.27	0.30	0.55	39		NC				
	with grilles-between-the-glass	PEL-N-229-01010-00001				0.28	0.27	0.50	39		NC				
	with Simulated Divided Light	PEL-N-229-01011-00001				0.28	0.27	0.50	39		NC				
11/16"	NaturalSun LowE IG	PEL-N-229-00897-00001	2.5	2.5	air	0.32	0.57	0.66	54						
	with grilles-between-the-glass	PEL-N-229-00898-00001				0.32	0.52	0.59	54						
	with Simulated Divided Light	PEL-N-229-00899-00001				0.33	0.52	0.59	54						
11/16"	NaturalSun LowE IG	PEL-N-229-00905-00001	3	3	air	0.32	0.56	0.65	53						
	with grilles-between-the-glass	PEL-N-229-00906-00001				0.32	0.51	0.58	53						
	with Simulated Divided Light	PEL-N-229-00907-00001				0.33	0.51	0.58	53						
11/16"	NaturalSun LowE IG	PEL-N-229-00913-00001	4	4	air	0.34	0.55	0.65	51						
	with grilles-between-the-glass	PEL-N-229-00914-00001				0.35	0.49	0.58	51						
	with Simulated Divided Light	PEL-N-229-00915-00001				0.35	0.49	0.58	51						

R-Value = 1/U-Factor
SHGC = Solar Heat Gain Coefficient
VLT % = Visible Light Transmission
CR = Condensation Resistance
ER = Canadian Energy Rating

Climate Zones

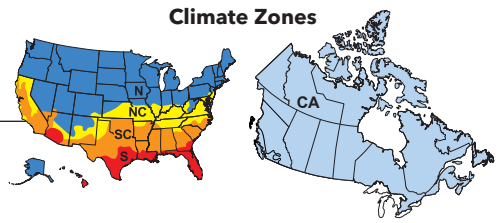

(1) Glazing performance values are calculated based on NFRC 100, NFRC 200 and NFRC 500. ENERGY STAR® values are updated to 2016 (Version 6) criteria.

(2) The values shown are based on Canada's updated ENERGY STAR® 2020 initiative.

See the Product Performance section for more detailed information or visit www.energystar.gov for Energy Star guidelines.

Grilles

Grille Profiles

Simulated-Divided-Light Grilles

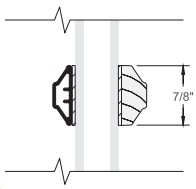

7/8" Regular

Simulated-Divided-Light Grilles with optional spacer

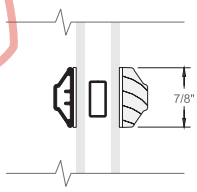

7/8" Regular

Roomside Removable Grilles

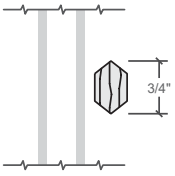

3/4" Regular (1)

Grilles-Between-the-Glass

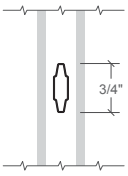

3/4"
Contoured Grille

Grille Patterns

Grilles-Between-the-Glass and Simulated-Divided-Light Grilles

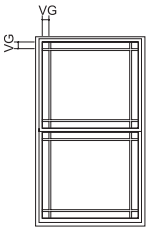

9-Lite Prairie

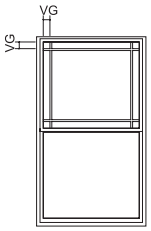

9-Lite Prairie
Top Sash Only

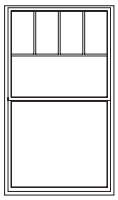

Top Row

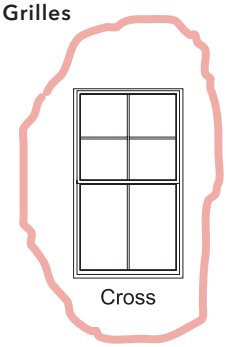

Cross

9-Lite Prairie
- Standard corner lite dimension for Prairie patterns = 2-1/2" VG.
- Available in transoms ≥ 1'3" height and width.

Cross
- Minimum DH frame height 35".
- Horizontal bar will be at 1/2" of the VG height of the top sash.

Top Row
- Minimum DH frame height 35".
- Horizontal bar will be at 1/2" of the VG height of the top sash.

For traditional patterns, see size tables.

VG = Visible Glass
(1) Grilles are available in traditional patterns only.
Lite dimensions noted can vary.
For size and pattern availability contact your local Pella sales representative.

Lifestyle Series Double-Hung

Size Tables - Double-Hung with Removable Grilles

Vent Units

Opening		1' 9 3/4" (552) (533)	2' 1 3/4" (654) (635)	2' 5 3/4" (755) (737)	2' 9 3/4" (857) (838)	3' 1 3/4" (959) (940)	3' 5 3/4" (1 060) (1 041)
Frame		1' 9"	2' 1"	2' 5"	2' 9"	3' 1"	3' 5"
2' 11 3/4" (908) (889)	2' 11"	2135	2535	2935	3335	3735	4135
3' 5 3/4" (1 060) (1 041)	3' 5"	2141	2541	2941	3341	3741	4141
3' 11 3/4" (1 213) (1 194)	3' 11"	2147	2547	2947	3347	3747	4147
4' 5 3/4" (1 365) (1 346)	4' 5"	2153	2553	2953	3353	3753	4153
4' 9 3/4" (1 467) (1 448)	4' 9"	2157	2557	2957	3357 E1	3757 E	4157 E
4' 11 3/4" (1 517) (1 499)	4' 11"	2159	2559	2959	3359 E1	3759 E	4159 E
5' 5 3/4" (1 670) (1 651)	5' 5"	2165	2565	2965 E1	3365 E	3765 E	4165 E
5' 11 3/4" (1 822) (1 803)	5' 11"	2171	2571	2971 E	3371 E	3771 E	4171 E
6' 5 3/4" (1 975) (1 956)	6' 5"	2177	2577 E1	2977 E	3377 E	3777 E	4177 E

Egress Notes:

Check all applicable local codes for emergency egress requirements.

- E = Window meets minimum clear opening of 24" height, 20" width, and 5.7 ft².
- E1 = Window meets minimum clear opening of 24" height, 20" width, and 5.0 ft².

See Design Data pages in this section for clear opening dimensions.

Not to scale.
Traditional grille patterns shown.
Grille patterns shown will align with grilles-between-the-glass on companion units.

Lifestyle Series Double-Hung

Size Tables - Fixed and Transoms with Removable Grilles

Transoms

Opening	(552) (533) 1' 9 3/4"	(654) (635) 2' 1 3/4"	(755) (737) 2' 5 3/4"	(857) (838) 2' 9 3/4"	(959) (940) 3' 1 3/4"	(1 060) (1 041) 3' 5 3/4"
Frame	1' 9"	2' 1"	2' 5"	2' 9"	3' 1"	3' 5"
(374) (356) 1' 2 3/4"	2114	2514	2914	3314	3714	4114
(451) (432) 1' 5 3/4" / 1' 5"	2117	2517	2917	3317	3717	4117
(552) (533) 1' 9 3/4" / 1' 9"	2121					
(654) (635) 2' 1 3/4" / 2' 1"	2125	2525	2925	3325	3725	4125
(756) (737) 2' 5 3/4" / 2' 5"			2929			

Fixed Units

Opening	(1 060) (1 041) 3' 5 3/4"	(1 213) (1 194) 3' 11 3/4"	(1 365) (1 346) 4' 5 3/4"	(1 517) (1 499) 4' 11 3/4"
Frame	3' 5"	3' 11"	4' 5"	4' 11"
(908) (889) 2' 11 3/4" / 2' 11"	4135	4735	5335	5935
(1 060) (1 041) 3' 5 3/4" / 3' 5"	4141	4741	5341	5941
(1 213) (1 194) 3' 11 3/4" / 3' 11"	4147	4747	5347	5947
(1 365) (1 346) 4' 5 3/4" / 4' 5"	4153	4753	5353	5953
(1 467) (1 448) 4' 9 3/4" / 4' 9"	4157	4757	5357	5957

Opening	(1 060) (1 041) 3' 5 3/4"	(1 213) (1 194) 3' 11 3/4"	(1 365) (1 346) 4' 5 3/4"	(1 517) (1 499) 4' 11 3/4"
Frame	3' 5"	3' 11"	4' 5"	4' 11"
(1 517) (1 499) 4' 11 3/4" / 4' 11"	4159	4759	5359	5959
(1 670) (1 651) 5' 5 3/4" / 5' 5"	4165	4765	5365	5965
(1 822) (1 803) 5' 11 3/4" / 5' 11"	4171	4771	5371	5971

Not to scale.
Traditional grille patterns shown.
Grille patterns shown will align with grilles-between-the-glass on companion units.

Lifestyle Series Double-Hung

Size Tables - Double-Hung with GBG's and SDL's[1]

Vent Units

Opening	1' 9 3/4" (552) (533)	2' 1 3/4" (654) (635)	2' 5 3/4" (755) (737)	2' 9 3/4" (857) (838)	3' 1 3/4" (959) (940)	3' 5 3/4" (1 060) (1 041)
Frame	1' 9"	2' 1"	2' 5"	2' 9"	3' 1"	3' 5"
2' 11 3/4" (908) (889)	2135	2535	2935	3335	3735	4135
3' 5 3/4" (1 060) (1 041)	2141	2541	2941	3341	3741	4141
3' 11 3/4" (1 213) (1 194)	2147	2547	2947	3347	3747	4147
4' 5 3/4" (1 365) (1 346)	2153	2553	2953	3353	3753	4153
4' 9 3/4" (1 467) (1 448)	2157	2557	2957	3357 E1	3757 E	4157 E
4' 11 3/4" (1 517) (1 499)	2159	2559	2959	3359 E1	3759 E	4159 E
5' 5 3/4" (1 670) (1 651)	2165	2565	2965 E1	3365 E	3765 E	4165 E
5' 11 3/4" (1 822) (1 803)	2171	2571	2971 E	3371 E	3771 E	4171 E
6' 5 3/4" (1 975) (1 956)	2177	2577 E1	2977 E	3377 E	3777 E	4177 E

Egress Notes:

Check all applicable local codes for emergency egress requirements.

- E = Window meets minimum clear opening of 24" height, 20" width, and 5.7 ft².
- E1 = Window meets minimum clear opening of 24" height, 20" width, and 5.0 ft².

See Design Data pages in this section for clear opening dimensions.

Not to scale.
(1) Simulated divided lights are available in traditional patterns only.
Traditional grille patterns shown.
Grille patterns shown will align with grilles-between-the-glass on companion units.

Lifestyle Series Double-Hung

Size Tables - Fixed and Transoms with GBG's and SDL's

Transoms

Opening	(552) (533)	(654) (635)	(755) (737)	(857) (838)	(959) (940)	(1 060) (1 041)
	1' 9 3/4"	2' 1 3/4"	2' 5 3/4"	2' 9 3/4"	3' 1 3/4"	3' 5 3/4"
Frame	1' 9"	2' 1"	2' 5"	2' 9"	3' 1"	3' 5"
(374) (356) 1' 2 3/4"	1' 2"	2114	2514	2914	3314	3714	4114
(451) (432) 1' 5 3/4"	1' 5"	2117	2517	2917	3317	3717	4117
(552) (533) 1' 9 3/4"	1' 9"	2121					
(654) (635) 2' 1 3/4"	2' 1"	2125	2525	2925	3325	3725	4125
(756) (737) 2' 5 3/4"	2' 5"			2929			

Fixed Units

Opening	(1 060) (1 041)	(1 213) (1 194)	(1 365) (1 346)	(1 517) (1 499)
	3' 5 3/4"	3' 11 3/4"	4' 5 3/4"	4' 11 3/4"
Frame	3' 5"	3' 11"	4' 5"	4' 11"
(908) (889) 2' 11 3/4"	2' 11"	4135	4735	5335	5935
(1 060) (1 041) 3' 5 3/4"	3' 5"	4141	4741	5341	5941
(1 213) (1 194) 3' 11 3/4"	3' 11"	4147	4747	5347	5947
(1 365) (1 346) 4' 5 3/4"	4' 5"	4153	4753	5353	5953
(1 467) (1 448) 4' 9 3/4"	4' 9"	4157	4757	5357	5957

Opening	(1 060) (1 041)	(1 213) (1 194)	(1 365) (1 346)	(1 517) (1 499)
	3' 5 3/4"	3' 11 3/4"	4' 5 3/4"	4' 11 3/4"
Frame	3' 5"	3' 11"	4' 5"	4' 11"
(1 517) (1 499) 4' 11 3/4"	4' 11"	4159	4759	5359	5959
(1 670) (1 651) 5' 5 3/4"	5' 5"	4165	4765	5365	5965
(1 822) (1 803) 5' 11 3/4"	5' 11"	4171	4771	5371	5971

Not to scale.
Traditional grille patterns shown.
Grille patterns shown will align with grilles-between-the-glass on companion units.

Lifestyle Series Double-Hung

Size Tables - Replacement Sizes with Removable Grilles

Transoms

Opening		2' 0 1/4" (616) (597)	2' 4 1/4" (718) (699)	2' 6 1/4" (762) (749)	2' 8 1/4" (819) (800)	3' 0 1/4" (921) (902)	3' 4 1/4" (1 022) (1 003)	3' 6 1/4" (1 073) (1 054)
Frame		1' 11 1/2"	2' 3 1/2"	2' 5 1/2"	2' 7 1/2"	2' 11 1/2"	3' 3 1/2"	3' 5 1/2"
(375) (356) 1' 2 3/4"	1' 2"	23.5 x 14	27.5 x 14	29.5 x 14	31.5 x 14	35.5 x 14	39.5 x 14	41.5 x 14
(451) (432) 1' 5 3/4"	1' 5"	23.5 x 17	27.5 x 17	29.5 x 17	31.5 x 17	35.5 x 17	39.5 x 17	41.5 x 17
(654) (635) 2' 1 3/4"	2' 1"	23.5 x 25	27.5 x 25	29.5 x 25	31.5 x 25	35.5 x 25	39.5 x 25	41.5 x 25

Vent Units

(921) (902) 3' 0 1/4"	2' 11 1/2"	23.5 x 35.5	27.5 x 35.5	29.5 x 35.5	31.5 x 35.5	35.5 x 35.5	39.5 x 35.5	41.5 x 35.5
(972) (953) 3' 2 1/4"	3' 1 1/2"	23.5 x 37.5	27.5 x 37.5	29.5 x 37.5	31.5 x 37.5	35.5 x 37.5	39.5 x 37.5	41.5 x 37.5
(1 073) (1 054) 3' 6 1/4"	3' 5 1/2"	23.5 x 41.5	27.5 x 41.5	29.5 x 41.5	31.5 x 41.5	35.5 x 41.5	39.5 x 41.5	41.5 x 41.5
(1 175) (1 156) 3' 10 1/4"	3' 9 1/2"	23.5 x 45.5	27.5 x 45.5	29.5 x 45.5	31.5 x 45.5	35.5 x 45.5	39.5 x 45.5	41.5 x 45.5
(1 226) (1 206) 4' 0 1/4"	3' 11 1/2"	23.5 x 47.5	27.5 x 47.5	29.5 x 47.5	31.5 x 47.5	35.5 x 47.5	39.5 x 47.5	41.5 x 47.5
(1 327) (1 308) 4' 4 1/4"	4' 3 1/2"	23.5 x 51.5	27.5 x 51.5	29.5 x 51.5	31.5 x 51.5	35.5 x 51.5	39.5 x 51.5	41.5 x 51.5
(1 378) (1 359) 4' 6 1/4"	4' 5 1/2"	23.5 x 53.5	27.5 x 53.5	29.5 x 53.5	31.5 x 53.5	35.5 x 53.5	39.5 x 53.5	41.5 x 53.5
(1 473) (1 461) 4' 10 1/4"	4' 9 1/2"	23.5 x 57.5	27.5 x 57.5	29.5 x 57.5	31.5 x 57.5 E1	35.5 x 57.5 E	39.5 x 57.5 E	41.5 x 57.5 E

Egress Notes:

Check all applicable local codes for emergency egress requirements.

E = Window meets minimum clear opening of 24" height, 20" width, and 5.7 ft².

E1 = Window meets minimum clear opening of 24" height, 20" width, and 5.0 ft².

See Design Data pages in this section for clear opening dimensions.

Not to scale.
Traditional grille patterns shown.

Lifestyle Series Double-Hung

Size Tables - Replacement Double-Hung with Removable Grilles

Vent Units

		(616) (597)	(718) (699)	(762) (749)	(819) (800)	(921) (902)	(1 022) (1 003)	(1 073) (1 054)
	Opening	2' 0 1/4"	2' 4 1/4"	2' 6 1/4"	2' 8 1/4"	3' 0 1/4"	3' 4 1/4"	3' 6 1/4"
	Frame	1' 11 1/2"	2' 3 1/2"	2' 5 1/2"	2' 7 1/2"	2' 11 1/2"	3' 3 1/2"	3' 5 1/2"
(1 530) (1 511)	5' 0 1/4" / 4' 11 1/2"	23.5 x 59.5	27.5 x 59.5	29.5 x 59.5	31.5 x 59.5 E1	35.5 x 59.5 E	39.5 x 59.5 E	41.5 x 59.5 E
(1 581) (1 562)	5' 2 1/4" / 5' 1 1/2"	23.5 x 61.5	27.5 x 61.5	29.5 x 61.5 E1	31.5 x 61.5 E1	35.5 x 61.5 E	39.5 x 61.5 E	41.5 x 61.5 E
(1 683) (1 664)	5' 6 1/4" / 5' 5 1/2"	23.5 x 65.5	27.5 x 65.5	29.5 x 65.5 E1	31.5 x 65.5 E	35.5 x 65.5 E	39.5 x 65.5 E	41.5 x 65.5 E
(1 835) (1 816)	6' 0 1/4" / 5' 11 1/2"	23.5 x 71.5	27.5 x 71.5 E1	29.5 x 71.5 E	31.5 x 71.5 E	35.5 x 71.5 E	39.5 x 71.5 E	41.5 x 71.5 E

Egress Notes:

Check all applicable local codes for emergency egress requirements.

E = Window meets minimum clear opening of 24" height, 20" width, and 5.7 ft².

E1 = Window meets minimum clear opening of 24" height, 20" width, and 5.0 ft².

See Design Data pages in this section for clear opening dimensions.

Not to scale.

Traditional grille patterns shown.

Lifestyle Series Double-Hung

Size Tables - Replacement Sizes with Grilles-Between-the-Glass

Transoms

Opening		(616) (597)	(718) (699)	(762) (749)	(819) (800)	(921) (902)	(1 022) (1 003)	(1 073) (1 054)
	Frame	2' 0 1/4"	2' 4 1/4"	2' 6 1/4"	2' 8 1/4"	3' 0 1/4"	3' 4 1/4"	3' 6 1/4"
		1' 11 1/2"	2' 3 1/2"	2' 5 1/2"	2' 7 1/2"	2' 11 1/2"	3' 3 1/2"	3' 5 1/2"
(375) (356)	1' 2 3/4"	23.5 x 14	27.5 x 14	29.5 x 14	31.5 x 14	35.5 x 14	39.5 x 14	41.5 x 14
(451) (432)	1' 5 3/4"	23.5 x 17	27.5 x 17	29.5 x 17	31.5 x 17	35.5 x 17	39.5 x 17	41.5 x 17
(654) (635)	2' 1 3/4"	23.5 x 25	27.5 x 25	29.5 x 25	31.5 x 25	35.5 x 25	39.5 x 25	41.5 x 25

Vent Units

(921) (902)	3' 0 1/4"	23.5 x 35.5	27.5 x 35.5	29.5 x 35.5	31.5 x 35.5	35.5 x 35.5	39.5 x 35.5	41.5 x 35.5
(972) (953)	3' 2 1/4"	23.5 x 37.5	27.5 x 37.5	29.5 x 37.5	31.5 x 37.5	35.5 x 37.5	39.5 x 37.5	41.5 x 37.5
(1 073) (1 054)	3' 6 1/4"	23.5 x 41.5	27.5 x 41.5	29.5 x 41.5	31.5 x 41.5	35.5 x 41.5	39.5 x 41.5	41.5 x 41.5
(1 175) (1 156)	3' 10 1/4"	23.5 x 45.5	27.5 x 45.5	29.5 x 45.5	31.5 x 45.5	35.5 x 45.5	39.5 x 45.5	41.5 x 45.5
(1 226) (1 206)	4' 0 1/4"	23.5 x 47.5	27.5 x 47.5	29.5 x 47.5	31.5 x 47.5	35.5 x 47.5	39.5 x 47.5	41.5 x 47.5
(1 327) (1 308)	4' 4 1/4"	23.5 x 51.5	27.5 x 51.5	29.5 x 51.5	31.5 x 51.5	35.5 x 51.5	39.5 x 51.5	41.5 x 51.5
(1 378) (1 359)	4' 6 1/4"	23.5 x 53.5	27.5 x 53.5	29.5 x 53.5	31.5 x 53.5	35.5 x 53.5	39.5 x 53.5	41.5 x 53.5
(1 473) (1 461)	4' 10 1/4"	23.5 x 57.5	27.5 x 57.5	29.5 x 57.5	31.5 x 57.5 E1	35.5 x 57.5 E	39.5 x 57.5 E	41.5 x 57.5 E

	2' 11 1/2"	23.5 x 35.5	27.5 x 35.5	29.5 x 35.5	31.5 x 35.5	35.5 x 35.5	39.5 x 35.5	41.5 x 35.5
	3' 1 1/2"	23.5 x 37.5	27.5 x 37.5	29.5 x 37.5	31.5 x 37.5	35.5 x 37.5	39.5 x 37.5	41.5 x 37.5
	3' 5 1/2"	23.5 x 41.5	27.5 x 41.5	29.5 x 41.5	31.5 x 41.5	35.5 x 41.5	39.5 x 41.5	41.5 x 41.5
	3' 9 1/2"	23.5 x 45.5	27.5 x 45.5	29.5 x 45.5	31.5 x 45.5	35.5 x 45.5	39.5 x 45.5	41.5 x 45.5
	3' 11 1/2"	23.5 x 47.5	27.5 x 47.5	29.5 x 47.5	31.5 x 47.5	35.5 x 47.5	39.5 x 47.5	41.5 x 47.5
	4' 3 1/2"	23.5 x 51.5	27.5 x 51.5	29.5 x 51.5	31.5 x 51.5	35.5 x 51.5	39.5 x 51.5	41.5 x 51.5
	4' 5 1/2"	23.5 x 53.5	27.5 x 53.5	29.5 x 53.5	31.5 x 53.5	35.5 x 53.5	39.5 x 53.5	41.5 x 53.5
	4' 9 1/2"	23.5 x 57.5	27.5 x 57.5	29.5 x 57.5	31.5 x 57.5 E1	35.5 x 57.5 E	39.5 x 57.5 E	41.5 x 57.5 E

Egress Notes:

Check all applicable local codes for emergency egress requirements.

E = Window meets minimum clear opening of 24" height, 20" width, and 5.7 ft².

E1 = Window meets minimum clear opening of 24" height, 20" width, and 5.0 ft².

See Design Data pages in this section for clear opening dimensions.

Not to scale.
Traditional grille patterns shown.

Lifestyle Series Double-Hung

Size Tables - Replacement Double-Hung with Grilles-Between-the-Glass

Vent Units

		(616) (597)	(718) (699)	(762) (749)	(819) (800)	(921) (902)	(1 022) (1 003)	(1 073) (1 054)
	Opening	2' 0 1/4"	2' 4 1/4"	2' 6 1/4"	2' 8 1/4"	3' 0 1/4"	3' 4 1/4"	3' 6 1/4"
	Frame	1' 11 1/2"	2' 3 1/2"	2' 5 1/2"	2' 7 1/2"	2' 11 1/2"	3' 3 1/2"	3' 5 1/2"
(1 530) (1 511)	5' 0 1/4" / 4' 11 1/2"	23.5 x 59.5	27.5 x 59.5	29.5 x 59.5	31.5 x 59.5 E1	35.5 x 59.5 E	39.5 x 59.5 E	41.5 x 59.5 E
(1 581) (1 562)	5' 2 1/4" / 5' 1 1/2"	23.5 x 61.5	27.5 x 61.5	29.5 x 61.5 E1	31.5 x 61.5 E1	35.5 x 61.5 E	39.5 x 61.5 E	41.5 x 61.5 E
(1 683) (1 664)	5' 6 1/4" / 5' 5 1/2"	23.5 x 65.5	27.5 x 65.5	29.5 x 65.5 E1	31.5 x 65.5 E	35.5 x 65.5 E	39.5 x 65.5 E	41.5 x 65.5 E
(1 835) (1 816)	6' 0 1/4" / 5' 11 1/2"	23.5 x 71.5	27.5 x 71.5 E1	29.5 x 71.5 E	31.5 x 71.5 E	35.5 x 71.5 E	39.5 x 71.5 E	41.5 x 71.5 E

Egress Notes:

Check all applicable local codes for emergency egress requirements.

E = Window meets minimum clear opening of 24" height, 20" width, and 5.7 ft².

E1 = Window meets minimum clear opening of 24" height, 20" width, and 5.0 ft².

See Design Data pages in this section for clear opening dimensions.

Not to scale.

Traditional grille patterns shown.

Lifestyle Series Double-Hung

Size Tables - Replacement Fixed with Removable Grilles

Fixed Units

Opening	3' 5 3/4" (1 060) (1 041)	3' 11 3/4" (1 213) (1 194)	4' 5 3/4" (1 365) (1 346)	4' 11 3/4" (1 517) (1 499)
Frame	3' 5"	3' 11"	4' 5"	4' 11"
3' 0 1/4" (921) (902) / 2' 11 1/2"	41 x 35.5	47 x 35.5	53 x 35.5	59 x 35.5
3' 2 1/4" (972) (953) / 3' 1 1/2"	41 x 37.5	47 x 37.5	53 x 37.5	59 x 37.5
3' 6 1/4" (1 073) (1 054) / 3' 5 1/2"	41 x 41.5	47 x 41.5	53 x 41.5	59 x 41.5
3' 10 1/4" (1 175) (1 156) / 3' 9 1/2"	41 X 45.5	47 X 45.5	53 X 45.5	59 X 45.5
4' 0 1/4" (1 226) (1 206) / 3' 11 1/2"	41 X 47.5	47 X 47.5	53 X 47.5	59 X 47.5
4' 4 1/4" (1 327) (1 308) / 4' 3 1/2"	41 x 51.5	47 x 51.5	53 x 51.5	59 x 51.5
4' 6 1/4" (1 378) (1 359) / 4' 5 1/2"	41 x 53.5	47 x 53.5	53 x 53.5	59 x 53.5
4' 10 1/4" (1 473) (1 461) / 4' 9 1/2"	41 x 57.5	47 x 57.5	53 x 57.5	59 x 57.5

Opening	3' 5 3/4" (1 060) (1 041)	3' 11 3/4" (1 213) (1 194)	4' 5 3/4" (1 365) (1 346)	4' 11 3/4" (1 517) (1 499)
Frame	3' 5"	3' 11"	4' 5"	4' 11"
5' 0 1/4" (1 530) (1 511) / 4' 11 1/2"	41 x 59.5	47 x 59.5	53 x 59.5	59 x 59.5
5' 2 1/4" (1 581) (1 562) / 5' 1 1/2"	41 x 61.5	47 x 61.5	53 x 61.5	59 x 61.5
5' 6 1/4" (1 683) (1 664) / 5' 5 1/2"	41 x 65.5	47 x 65.5	53 x 65.5	59 x 65.5
6' 0 1/4" (1 835) (1 816) / 5' 11 1/2"	41 x 71.5	47 x 71.5	53 x 71.5	59 x 71.5

Egress Notes:

Check all applicable local codes for emergency egress requirements.

E = Window meets minimum clear opening of 24" height, 20" width, and 5.7 ft².

E1 = Window meets minimum clear opening of 24" height, 20" width, and 5.0 ft².

See Design Data pages in this section for clear opening dimensions.

Not to scale.

Traditional grille patterns shown.

Lifestyle Series Double-Hung

Size Tables - Replacement Fixed with Grilles-Between-the-Glass

		(1 060) (1 041)	(1 213) (1 194)	(1 365) (1 346)	(1 517) (1 499)
	Opening	3' 5 3/4"	3' 11 3/4"	4' 5 3/4"	4' 11 3/4"
	Frame	3' 5"	3' 11"	4' 5"	4' 11"
(921) (902)	3' 0 1/4"	2' 11 1/2"	41 x 35.5	47 x 35.5	53 x 35.5	59 x 35.5
(972) (953)	3' 2 1/4"	3' 1 1/2"	41 x 37.5	47 x 37.5	53 x 37.5	59 x 37.5
(1 073) (1 054)	3' 6 1/4"	3' 5 1/2"	41 x 41.5	47 x 41.5	53 x 41.5	59 x 41.5
(1 175) (1 156)	3' 10 1/4"	3' 9 1/2"	41 X 45.5	47 X 45.5	53 X 45.5	59 X 45.5
(1 226) (1 206)	4' 0 1/4"	3' 11 1/2"	41 X 47.5	47 X 47.5	53 X 47.5	59 X 47.5
(1 327) (1 308)	4' 4 1/4"	4' 3 1/2"	41 x 51.5	47 x 51.5	53 x 51.5	59 x 51.5
(1 378) (1 359)	4' 6 1/4"	4' 5 1/2"	41 x 53.5	47 x 53.5	53 x 53.5	59 x 53.5
(1 473) (1 461)	4' 10 1/4"	4' 9 1/2"	41 x 57.5	47 x 57.5	53 x 57.5	59 x 57.5

		(1 060) (1 041)	(1 213) (1 194)	(1 365) (1 346)	(1 517) (1 499)
	Opening	3' 5 3/4"	3' 11 3/4"	4' 5 3/4"	4' 11 3/4"
	Frame	3' 5"	3' 11"	4' 5"	4' 11"
(1 530) (1 511)	5' 0 1/4"	4' 11 1/2"	41 x 59.5	47 x 59.5	53 x 59.5	59 x 59.5
(1 581) (1 562)	5' 2 1/4"	5' 1 1/2"	41 x 61.5	47 x 61.5	53 x 61.5	59 x 61.5
(1 683) (1 664)	5' 6 1/4"	5' 5 1/2"	41 x 65.5	47 x 65.5	53 x 65.5	59 x 65.5
(1 835) (1 816)	6' 0 1/4"	5' 11 1/2"	41 x 71.5	47 x 71.5	53 x 71.5	59 x 71.5

Egress Notes:

Check all applicable local codes for emergency egress requirements.

E = Window meets minimum clear opening of 24" height, 20" width, and 5.7 ft².

E1 = Window meets minimum clear opening of 24" height, 20" width, and 5.0 ft².

See Design Data pages in this section for clear opening dimensions.

Not to scale.

Traditional grille patterns shown.

Lifestyle Series Double-Hung

Special Sizes and Dimensions

Special Size Frame Dimensions*

	Minimum	Maximum
Vent	1' 9" W x 2' 11" H (21" x 35") (533 x 889)	3' 5" W x 6' 5" H (41-1/2" x 77") (1 041 x 1 956)
Fixed	1' 9" W x 1' 2" H (21" x 14") (533 x 356)	4' 11" W x 6' 1" H (59" x 73") (1 499 x 1 854)

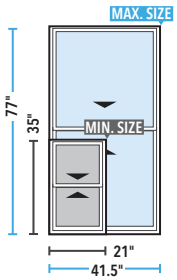

Miscellaneous Formulas (Equal Sash Only)

	Vent Units
Visible Glass	Width = Frame – 5" Height$_1$ = (Frame – 6.3125") ÷ 2
Actual Glass	Width = Frame – 4" Height$_1$ = (Frame – 4.3125") ÷ 2
Clear Opening Height:	(Frame Height ÷ 2) - 3.25"
Clear Opening Width:	Frame Width - 3.1875"

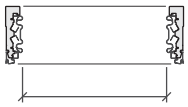

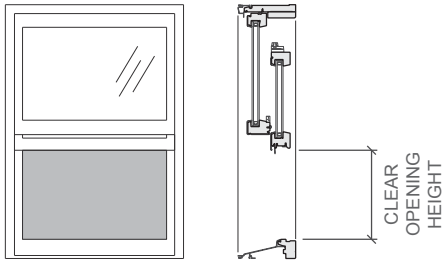

Shaded portion
shows vent area.

Miscellaneous Formulas (Fixed Units Only)

	Fixed and transom units
Visible Glass	Width = Frame – 4.9375" Height = Frame – 4.9375"
Actual Glass	Width = Frame – 4" Height = Frame – 4"

* Available within size range shown. Keep frame dimensions to the nearest 1/4" increment. Frame height cannot exceed frame width on special size dual-pane vent units.
(1) Per Sash
To convert areas to square meters (m^2), multiply square feet by 0.0929.

Lifestyle Series Double-Hung

Design Data - Vent Units

New Construction Vent

Unit	Egress	Clear Opening (Inches)		Vent Area Ft²	Visible Glass Ft²	Standard Glass Thickness (mm)		Performance Class & Grade [1]
		Width	Height			Annealed	Tempered	
2135		17-13/16	14-1/4	1.8	3.2	2.5	3	LC50
2141		17-13/16	17-1/4	2.1	3.9	2.5	3	LC50
2147		17-13/16	20-1/4	2.5	4.5	2.5	3	LC50
2153		17-13/16	23-1/4	2.9	5.2	2.5	3	LC50
2157		17-13/16	25-1/4	3.1	5.6	2.5	3	LC40/LC50
2159		17-13/16	26-1/4	3.2	5.9	2.5	3	LC40/LC50
2165		17-13/16	29-1/4	3.6	6.5	2.5	3	LC40/LC50
2171		17-13/16	32-1/4	4.0	7.2	2.5	3	LC30/LC50
2177		17-13/16	35-1/4	4.3	7.8	2.5	3	LC30
2535		21-13/16	14-1/4	2.2	4.0	2.5	3	LC50
2541		21-13/16	17-1/4	2.6	4.8	2.5	3	LC50
2547		21-13/16	20-1/4	3.1	5.7	2.5	3	LC50
2553		21-13/16	23-1/4	3.5	6.5	2.5	3	LC50
2557		21-13/16	25-1/4	3.8	7.0	2.5	3	LC40/LC50
2559		21-13/16	26-1/4	4.0	7.3	2.5	3	LC40/LC50
2565		21-13/16	29-1/4	4.4	8.2	2.5	3	LC40/LC50
2571		21-13/16	32-1/4	4.9	9.0	2.5	3	LC30/LC50
2577	E1	21-13/16	35-1/4	5.3	9.8	2.5	3	LC30
2935		25-13/16	14-1/4	2.6	4.8	2.5	3	LC50
2941		25-13/16	17-1/4	3.1	5.8	2.5	3	LC50
2947		25-13/16	20-1/4	3.6	6.8	2.5	3	LC50
2953		25-13/16	23-1/4	4.2	7.8	2.5	3	LC50
2957		25-13/16	25-1/4	4.5	8.4	2.5	3	LC40/LC50
2959		25-13/16	26-1/4	4.7	8.8	2.5	3	LC40/LC50
2965	E1	25-13/16	29-1/4	5.2	9.8	2.5	3	LC40/LC50
2971	E	25-13/16	32-1/4	5.8	10.8	2.5	3	LC30/LC50
2977	E	25-13/16	35-1/4	6.3	11.7	2.5	3	LC30
3335		29-13/16	14-1/4	3.0	5.6	2.5	3	LC50
3341		29-13/16	17-1/4	3.6	6.7	2.5	3	LC50
3347		29-13/16	20-1/4	4.2	7.9	2.5	3	LC50
3353		29-13/16	23-1/4	4.8	9.1	2.5	3	LC40/LC50
3357	E1	29-13/16	25-1/4	5.2	9.9	2.5	3	LC40/LC50
3359	E1	29-13/16	26-1/4	5.4	10.2	2.5	3	LC40/LC50
3365	E	29-13/16	29-1/4	6.1	11.4	2.5	3	LC35/LC50
3371	E	29-13/16	32-1/4	6.7	12.6	2.5	3	LC30/LC50
3377	E	29-13/16	35-1/4	7.3	13.7	2.5	3	LC30
3735		33-13/16	14-1/4	3.3	6.4	2.5	3	LC35/LC50
3741		33-13/16	17-1/4	4.1	7.7	2.5	3	LC35/LC50
3747		33-13/16	20-1/4	4.8	9.0	2.5	3	LC35/LC50
3753		33-13/16	23-1/4	5.5	10.4	2.5	3	LC35/LC50
3757	E	33-13/16	25-1/4	5.9	11.3	2.5	3	LC35/LC50
3759	E	33-13/16	26-1/4	6.2	11.7	2.5	3	LC35/LC50
3765	E	33-13/16	29-1/4	6.9	13.0	2.5	3	LC35/LC50
3771	E	33-13/16	32-1/4	7.6	14.4	2.5	3	LC30/LC50
3777	E	33-13/16	35-1/4	8.3	15.7	2.5	3	LC30
4135		37-13/16	14-1/4	3.7	6.5	2.5	3	LC30
4141		37-13/16	17-1/4	4.5	7.9	2.5	3	LC30
4147		37-13/16	20-1/4	5.3	9.2	2.5	3	LC30
4153		37-13/16	23-1/4	6.1	11.7	2.5	3	LC30
4157	E	37-13/16	25-1/4	6.6	12.7	2.5	3	LC30
4159	E	37-13/16	26-1/4	6.9	13.2	2.5	3	LC30
4165	E	37-13/16	29-1/4	7.7	14.7	2.5	3	LC30
4171	E	37-13/16	32-1/4	8.5	16.2	2.5	3	LC30
4177	E	37-13/16	35-1/4	9.2	17.6	2.5	3	LC30

Egress Notes:

Check all applicable local codes for emergency egress requirements.

E = Window meets minimum clear opening of 24" height, 20" width, and 5.7 ft².

E1 = Window meets minimum clear opening of 24" height, 20" width, and 5.0 ft².

(1) Maximum performance when glazed with the appropriate glass thickness. Second number, where shown, indicates performance with DP Enhancement Kit installed.

To convert area to square meters (m²), multiply square feet by 0.0929.

Lifestyle Series Double-Hung

Design Data - Fixed and Transoms

New Construction Fixed

Unit	Visible Glass Ft²	Standard Glass Thickness (mm)		Performance Class & Grade [1]
		Annealed	Tempered	
4135	7.5	3	3	LC50
4141	9.0	3	3	LC50
4147	10.5	3	3	LC50
4153	12.0	3	3	LC50
4157	13.0	3	3	LC50
4159	13.6	3	3	LC50
4165	15.1	3	3	LC50
4171	16.6	3	3	LC45/LC50
4735	8.8	3	3	LC50
4741	10.5	3	3	LC50
4747	12.3	3	3	LC50
4753	14.1	3	3	LC50
4757	15.2	3	3	LC50
4759	15.8	3	3	LC45/LC50
4765	17.6	3	3	LC45/LC50
4771	19.3	4	4	LC50
5335	10.0	3	3	LC50
5341	12.0	3	3	LC50
5347	14.1	3	3	LC50
5353	16.1	3	4	LC45/LC50
5357	17.4	3	4	LC45/LC50
5359	18.1	4	4	LC50
5365	20.1	4	4	LC50
5371	22.1	4	4	LC50
5935	11.3	3	3	LC50
5941	13.6	3	3	LC50
5947	15.8	3	3	LC45/LC50
5953	18.1	4	4	LC50
5957	19.6	4	4	LC50
5959	20.3	4	4	LC50
5965	22.6	4	4	LC50
5971	24.8	4	4	LC45/LC50

New Construction Fixed Transom

Unit	Visible Glass Ft²	Standard Glass Thickness (mm)		Performance Class & Grade [1]
		Annealed	Tempered	
2114	1.0	3	3	LC50
2117	1.3	3	3	LC50
2121	1.8	3	3	LC50
2125	2.2	3	3	LC50
2514	1.3	3	3	LC50
2517	1.7	3	3	LC50
2525	2.8	3	3	LC50
2914	1.5	3	3	LC50
2917	2.0	3	3	LC50
2925	3.4	3	3	LC50
2929	4.0	3	3	LC50
3314	1.8	3	3	LC50
3317	2.4	3	3	LC50
3325	3.9	3	3	LC50
3714	2.0	3	3	LC50
3717	2.7	3	3	LC50
3725	4.5	3	3	LC50
4114	2.3	3	3	LC50
4117	3.0	3	3	LC50
4125	5.0	3	3	LC50

(1) Maximum performance when glazed with the appropriate glass thickness. Second number, where shown, requires tempered glass.
To convert areas to square meters (m²), multiply square feet by 0.0929.

Lifestyle Series Double-Hung

Design Data - Replacement Double-Hung

Replacement Vent

Unit	Egress	Clear Opening		Vent Area Ft²	Visible Glass Ft²	Standard Glass Thickness (mm)		Performance Class & Grade [1]
		Width (Inches)	Height (Inches)			Annealed	Tempered	
23.5 x 35.5		20-5/16	14-1/2	2.0	3.7	2.5	3	LC50
23.5 x 37.5		20-5/16	15-1/2	2.1	4.0	2.5	3	LC50
23.5 x 41.5		20-5/16	17-1/2	2.4	4.5	2.5	3	LC50
23.5 x 45.5		20-5/16	19-1/2	2.7	5.0	2.5	3	LC50
23.5 x 47.5		20-5/16	20-1/2	2.8	5.3	2.5	3	LC50
23.5 x 51.5		20-5/16	22-1/2	3.1	5.8	2.5	3	LC50
23.5 x 53.5		20-5/16	23-1/2	3.3	6.1	2.5	3	LC40/LC50
23.5 x 57.5		20-5/16	25-1/2	3.5	6.6	2.5	3	LC40/LC50
23.5 x 59.5		20-5/16	26-1/2	3.7	6.8	2.5	3	LC40/LC50
23.5 x 61.5		20-5/16	27-1/2	3.8	7.1	2.5	3	LC40/LC50
23.5 x 65.5		20-5/16	29-1/2	4.1	7.6	2.5	3	LC30/LC50
23.5 x 71.5		20-5/16	32-1/2	4.5	8.4	2.5	3	LC30/LC50
27.5 x 35.5		24-5/16	14-1/2	2.4	4.6	2.5	3	LC50
27.5 x 37.5		24-5/16	15-1/2	2.6	4.9	2.5	3	LC50
27.5 x 41.5		24-5/16	17-1/2	2.9	5.5	2.5	3	LC50
27.5 x 45.5		24-5/16	19-1/2	3.2	6.1	2.5	3	LC50
27.5 x 47.5		24-5/16	20-1/2	3.4	6.4	2.5	3	LC50
27.5 x 51.5		24-5/16	22-1/2	3.7	7.1	2.5	3	LC50
27.5 x 53.5		24-5/16	23-1/2	3.9	7.4	2.5	3	LC40/LC50
27.5 x 57.5		24-5/16	25-1/2	4.3	8.0	2.5	3	LC40/LC50
27.5 x 59.5		24-5/16	26-1/2	4.4	8.3	2.5	3	LC40/LC50
27.5 x 61.5		24-5/16	27-1/2	4.6	8.6	2.5	3	LC40/LC50
27.5 x 65.5		24-5/16	29-1/2	4.9	9.2	2.5	3	LC30/LC50
27.5 x 71.5	E1	24-5/16	32-1/2	5.4	10.2	2.5	3	LC30/LC50
29.5 x 35.5		26-5/16	14-1/2	2.6	5.0	2.5	3	LC50
29.5 x 37.5		26-5/16	15-1/2	2.8	5.3	2.5	3	LC50
29.5 x 41.5		26-5/16	17-1/2	3.1	6.0	2.5	3	LC50
29.5 x 45.5		26-5/16	19-1/2	3.5	6.7	2.5	3	LC50
29.5 x 47.5		26-5/16	20-1/2	3.7	7.0	2.5	3	LC40/LC50
29.5 x 51.5		26-5/16	22-1/2	4.1	7.7	2.5	3	LC40/LC50
29.5 x 53.5		26-5/16	23-1/2	4.2	8.0	2.5	3	LC40/LC50
29.5 x 57.5		26-5/16	25-1/2	4.6	8.7	2.5	3	LC40/LC50
29.5 x 59.5		26-5/16	26-1/2	4.8	9.0	2.5	3	LC35/LC50
29.5 x 61.5	E1	26-5/16	27-1/2	5.0	9.4	2.5	3	LC35/LC50
29.5 x 65.5	E1	26-5/16	29-1/2	5.3	10.1	2.5	3	LC30/LC50
29.5 x 71.5	E	26-5/16	32-1/2	5.9	11.1	2.5	3	LC30/LC50

Egress Notes:

Check all applicable local codes for emergency egress requirements.

E = Window meets minimum clear opening of 24" height, 20" width, and 5.7 ft².

E1 = Window meets minimum clear opening of 24" height, 20" width, and 5.0 ft².

(1) Maximum performance when glazed with the appropriate glass thickness. Second number, where shown, indicates performance with DP Enhancement Kit installed.

Lifestyle Series Double-Hung

Design Data - Replacement Double-Hung

Replacement Vent

Unit	Egress	Clear Opening		Vent Area Ft²	Visible Glass Ft²	Standard Glass Thickness (mm)		Performance Class & Grade [1]
		Width (Inches)	Height (Inches)			Annealed	Tempered	
31.5 x 35.5		28-5/16	14-1/2	2.8	5.4	2.5	3	LC50
31.5 x 37.5		28-5/16	15-1/2	3.0	5.7	2.5	3	LC50
31.5 x 41.5		28-5/16	17-1/2	3.4	6.5	2.5	3	LC50
31.5 x 45.5		28-5/16	19-1/2	3.8	7.2	2.5	3	LC50
31.5 x 47.5		28-5/16	20-1/2	4.0	7.6	2.5	3	LC40/LC50
31.5 x 51.5		28-5/16	22-1/2	4.4	8.3	2.5	3	LC40/LC50
31.5 x 53.5		28-5/16	23-1/2	4.6	8.7	2.5	3	LC40/LC50
31.5 x 57.5	E1	28-5/16	25-1/2	5.0	9.4	2.5	3	LC40/LC50
31.5 x 59.5	E1	28-5/16	26-1/2	5.2	9.8	2.5	3	LC35/LC50
31.5 x 61.5	E1	28-5/16	27-1/2	5.4	10.2	2.5	3	LC35/LC50
31.5 x 65.5	E	28-5/16	29-1/2	5.8	10.9	2.5	3	LC30/LC50
31.5 x 71.5	E	28-5/16	32-1/2	6.3	12.0	2.5	3	LC30/LC50
35.5 x 35.5		32-5/16	14-1/2	3.2	6.2	2.5	3	LC35/LC50
35.5 x 37.5		32-5/16	15-1/2	3.4	6.6	2.5	3	LC35/LC50
35.5 x 41.5		32-5/16	17-1/2	3.9	7.5	2.5	3	LC35/LC50
35.5 x 45.5		32-5/16	19-1/2	4.3	8.3	2.5	3	LC35/LC50
35.5 x 47.5		32-5/16	20-1/2	4.6	8.7	2.5	3	LC35/LC50
35.5 x 51.5		32-5/16	22-1/2	5.0	9.6	2.5	3	LC35/LC50
35.5 x 53.5		32-5/16	23-1/2	5.2	10.0	2.5	3	LC35/LC50
35.5 x 57.5	E1	32-5/16	25-1/2	5.7	10.8	2.5	3	LC35/LC50
35.5 x 59.5	E	32-5/16	26-1/2	5.9	11.3	2.5	3	LC35/LC50
35.5 x 61.5	E	32-5/16	27-1/2	6.1	11.7	2.5	3	LC35/LC50
35.5 x 65.5	E	32-5/16	29-1/2	6.6	12.5	2.5	3	LC30/LC50
35.5 x 71.5	E	32-5/16	32-1/2	7.2	13.8	2.5	3	LC30/LC50
39.5 x 35.5		36-5/16	14-1/2	3.6	7.0	2.5	3	LC30
39.5 x 37.5		36-5/16	15-1/2	3.9	7.5	2.5	3	LC30
39.5 x 41.5		36-5/16	17-1/2	4.4	8.4	2.5	3	LC30
39.5 x 45.5		36-5/16	19-1/2	4.9	9.4	2.5	3	LC30
39.5 x 47.5		36-5/16	20-1/2	5.1	9.9	2.5	3	LC30
39.5 x 51.5		36-5/16	22-1/2	5.6	10.8	2.5	3	LC30
39.5 x 53.5		36-5/16	23-1/2	5.9	11.3	2.5	3	LC30
39.5 x 57.5	E	36-5/16	25-1/2	6.4	12.3	2.5	3	LC30
39.5 x 59.5	E	36-5/16	26-1/2	6.6	12.7	2.5	3	LC30
39.5 x 61.5	E	36-5/16	27-1/2	6.9	13.2	2.5	3	LC30
39.5 x 65.5	E	36-5/16	29-1/2	7.4	14.2	2.5	3	LC30
39.5 x 71.5	E	36-5/16	32-1/2	8.1	15.6	2.5	3	LC30
41.5 x 35.5		38-5/16	14-1/2	3.6	7.4	2.5	3	LC30
41.5 x 37.5		38-5/16	15-1/2	3.9	7.9	2.5	3	LC30
41.5 x 41.5		38-5/16	17-1/2	4.4	8.9	2.5	3	LC30
41.5 x 45.5		38-5/16	19-1/2	4.9	9.9	2.5	3	LC30
41.5 x 47.5		38-5/16	20-1/2	5.1	10.4	2.5	3	LC30
41.5 x 51.5		38-5/16	22-1/2	5.6	11.5	2.5	3	LC30
41.5 x 53.5		38-5/16	23-1/2	5.9	12.0	2.5	3	LC30
41.5 x 57.5	E	38-5/16	25-1/2	6.4	13.0	2.5	3	LC30
41.5 x 59.5	E	38-5/16	26-1/2	6.6	13.5	2.5	3	LC30
41.5 x 61.5	E	38-5/16	27-1/2	6.9	14.0	2.5	3	LC30
41.5 x 65.5	E	38-5/16	29-1/2	7.4	15.0	2.5	3	LC30
41.5 x 71.5	E	38-5/16	32-1/2	8.1	16.5	2.5	3	LC30

Egress Notes:

Check all applicable local codes for emergency egress requirements.

E = Window meets minimum clear opening of 24" height, 20" width, and 5.7 ft².

E1 = Window meets minimum clear opening of 24" height, 20" width, and 5.0 ft².

(1) Maximum performance when glazed with the appropriate glass thickness. Second number, where shown, indicates performance with DP Enhancement Kit installed.

Lifestyle Series Double-Hung

Design Data - Replacement Fixed and Transoms

Replacement Fixed

Unit	Visible Glass Ft²	Standard Glass Thickness (mm)		Performance Class & Grade [1]
		Annealed	Tempered	
41 x 35.5	7.7	3	3	LC50
41 x 37.5	8.2	3	3	LC50
41 x 41.5	9.2	3	3	LC50
41 x 45.5	10.2	3	3	LC50
41 x 47.5	10.7	3	3	LC50
41 x 51.5	11.7	3	3	LC50
41 x 53.5	12.2	3	3	LC50
41 x 57.5	13.2	3	3	LC50
41 x 59.5	13.7	3	3	LC50
41 x 61.5	14.2	3	3	LC50
41 x 65.5	15.2	3	3	LC50
41 x 71.5	16.7	3	3	LC45/LC50
47 x 35.5	8.9	3	3	LC50
47 x 37.5	9.5	3	3	LC50
47 x 41.5	10.7	3	3	LC50
47 x 45.5	11.9	3	3	LC50
47 x 47.5	12.4	3	3	LC50
47 x 51.5	13.6	3	3	LC50
47 x 53.5	14.2	3	3	LC50
47 x 57.5	15.4	3	3	LC50
47 x 59.5	15.9	3	3	LC45/LC50
47 x 61.5	16.5	3	3	LC45/LC50
47 x 65.5	17.7	3	3	LC40/LC50
47 x 71.5	19.5	4	4	LC50
53 x 35.5	10.2	3	3	LC50
53 x 37.5	10.9	3	3	LC50
53 x 41.5	12.2	3	3	LC50
53 x 45.5	13.5	3	3	LC50
53 x 47.5	14.2	3	3	LC50
53 x 51.5	15.6	3	3	LC50
53 x 53.5	16.2	3	4	LC45/LC50
53 x 57.5	17.6	3	4	LC40/LC50
53 x 59.5	18.2	4	4	LC50
53 x 61.5	18.9	4	4	LC50
53 x 65.5	20.2	4	4	LC50
53 x 71.5	22.2	4	4	LC50
59 x 35.5	11.5	3	3	LC50
59 x 37.5	12.2	3	3	LC50
59 x 41.5	13.7	3	3	LC50
59 x 45.5	15.2	3	3	LC50
59 x 47.5	16.0	3	3	LC45/LC50
59 x 51.5	17.5	3	4	LC45/LC50
59 x 53.5	18.2	4	4	LC50
59 x 57.5	19.7	4	4	LC50
59 x 59.5	20.5	4	4	LC50
59 x 61.5	21.2	4	4	LC50
59 x 65.5	22.8	4	4	LC50
59 x 71.5	25.0	4	4	LC45/LC50

Replacement Fixed Transom

Unit	Visible Glass Ft²	Standard Glass Thickness (mm)		Performance Class & Grade [1]
		Annealed	Tempered	
23.5 x 14	1.2	3	3	LC50
23.5 x 17	1.6	3	3	LC50
23.5 x 25	2.6	3	3	LC50
27.5 x 14	1.4	3	3	LC50
27.5 x 17	1.9	3	3	LC50
27.5 x 25	3.1	3	3	LC50
29.5 x 14	1.5	3	3	LC50
29.5 x 17	2.1	3	3	LC50
29.5 x 25	3.4	3	3	LC50
31.5 x 14	1.7	3	3	LC50
31.5 x 17	2.2	3	3	LC50
31.5 x 25	3.7	3	3	LC50
35.5 x 14	1.9	3	3	LC50
35.5 x 17	2.6	3	3	LC50
35.5 x 25	4.3	3	3	LC50
39.5 x 14	2.2	3	3	LC50
39.5 x 17	2.9	3	3	LC50
39.5 x 25	4.8	3	3	LC50
41.5 x 14	2.3	3	3	LC50
41.5 x 17	3.1	3	3	LC50
41.5 x 25	5.1	3	3	LC50

(1) Maximum performance when glazed with the appropriate glass thickness. Second numbe own, requires tempered glass.
To convert areas to square meters (m²), multiply square feet by 0.0929.

Lifestyle Series Double-Hung

Detailed Product Description

Frame

- Select softwood, immersion treated with Pella's EnduraGuard® wood protection formula in accordance with WDMA I.S.-4. The EnduraGuard formula includes three active ingredients for protection against the effects of moisture, decay, stains from mold and mildew. Plus, an additional ingredient adds protection against termite damage.
- Interior exposed surfaces are clear pine.
- Exterior surfaces are clad with aluminum.
- Components are assembled with screws, staples and concealed corner locks.
- Overall frame depth is 5" (127 mm) for a wall depth of 3-11/16" (94mm).
- Jamb liner shall be high-impact polyvinyl chloride backed by continuous hard-tempered aluminum springs.
- Optional factory applied jamb extensions are available.
- Optional factory installed fold-out installation fins with flexible fin corners.
- Optional factory-applied EnduraClad® exterior trim.

Sash

- Select softwood, immersion treated with Pella's EnduraGuard® wood protection formula in accordance with WDMA I.S.-4. The EnduraGuard formula includes three active ingredients for protection against the effects of moisture, decay, stains from mold and mildew. Plus, an additional ingredient adds protection against termite damage.
- Interior exposed surfaces are clear pine.
- Exterior surfaces are clad with aluminum, lap-jointed and sealed.
- Corners mortised and tenoned, glued and secured with metal fasteners.
- Sash thickness is 1-5/8" (41 mm).
- Sashes tilt for easy cleaning.

Weatherstripping

- Foam with 3 mm skin at head and bottom rail. Thermal-plastic elastomer bulb with slip-coating set into upper sash for tight contact at check rail.
- Secondary polyvinyl chloride leaf-type weatherstrip on bottom sash at sill.
- Jamb liner to seal against sides of sash.

Glazing System

- Quality float glass complying with ASTM C 1036.
- High altitude glazing available.
- Silicone groove-glazed 11/16" [obscure] dual-seal insulating glass [[annealed] [tempered]] [[Advanced Low-E] [SunDefense™ Low-E] [AdvancedComfort] [NaturalSun Low-E] with argon]].

Exterior

- Exterior aluminum surfaces are finished with EnduraClad® protective finish, in a multi-step, baked-on finish.
- Color is [White] [Tan] [Putty] [Brown] [Poplar White] [Portobello] [Hartford Green] [Morning Sky Gray] [Brick Red] [Black].

Interior

- [Unfinished, ready for site finishing] [factory primed with one coat acrylic latex] [factory prefinished [White] [Linen] [Bright White] [stain[1]]].

Hardware

- Galvanized block-and-tackle balances are connected to sash with a polyester cord and concealed within the frame.
- Factory installed self-aligning surface-mounted sash lock. Two sash locks on units with frame width 33-1/4" and greater.
- Optional Sash lift furnished for field installation. Two lifts on units with frame width 33-1/4" and greater.
- Finish is [baked enamel [Champagne] [White] [Brown] [Matte Black]] [Oil-Rubbed Bronze] [Satin Nickel].
- Champagne locks are standard on unfinished units; White locks are standard on factory prefinished white units.

Optional Products

Grilles

- Simulated-Divided-Light [with optional spacer]
  - 7/8" Grilles permanently bonded to the interior and exterior of glass.
  - Patterns are [Traditional] [Prairie] [Cross] [Top Row] [Custom – Equally Divided].
  - Interior surfaces are [unfinished, ready for site finishing] [factory primed] [pine: factory prefinished [White] [Linen White] [Bright White] [stain[1]]]. Exterior grilles to match the exterior cladding color.
  - Available only on units glazed with Low-E insulated glass with argon.

  – or –
- Grilles-Between-the-Glass[2]
  - Insulating glass contains 3/4" contoured aluminum grilles permanently installed between two panes of glass.
  - Patterns are [Traditional] [9-Lite Prairie] [Top Row] [Custom – Equally Divided].
  - Interior color is [White] [Ivory] [Tan[3]] [Brickstone] [Black] [Putty[3]] [Brown[3]] [Harvest] [Cordovan].
  - Exterior color [matched to the exterior cladding color] [White][4].

  – or –
- Roomside Removable Grilles
  - 3/4" [Traditional] [Custom - Equally Divided] removable solid pine wood bars steel-pinned at joints and fitted to sash with steel clips and tacks.
  - Interior [unfinished, ready for site finishing] [factory primed] [pine: factory prefinished [White] [Linen White] [Bright White] [stain[1]]].
  - Exterior [unfinished, ready for site finishing] [factory primed] [factory prefinished, finish color matched to exterior cladding] [White][4].

Screens

- InView™ screens
  - Full-size Vinyl-coated 18/18 mesh fiberglass screen cloth complying with the performance requirements of SMA 1201, set in aluminum frame fitted to outside of window, supplied complete with all necessary hardware.
  - Screen frame finish is baked enamel, color to match window cladding.

  – or –
- Vivid View® screens
  - Full-size PVDF 21/17 mesh, minimum 78 percent light transmissive screen, set in aluminum frame fitted to outside of window, supplied complete with all necessary hardware.
  - Screen frame finish is baked enamel, color to match window cladding.

Hardware

- Optional factory applied limited opening device available for vent units in steel, nominal 3-3/4" opening.
- Optional window opening control device available for field installation. Device allows window to open less than 4" with normal operation, with a release mechanism that allows the sash to open completely. Complies with ASTM F2090-10.

Sensors

- Optional factory installed integrated security sensors available in vent units.

(1) Contact your local Pella sales representative for current designs and color options.
(2) Available on units glazed with Low-E insulated glass with argon, and obscure insulated glass.
(3) Tan, brown and putty Interior GBG colors are available only with matching interior and exterior colors.
(4) Appearance of exterior grille color will vary depending on Low-E coating on glass.

Lifestyle Series Double-Hung

Unit Sections

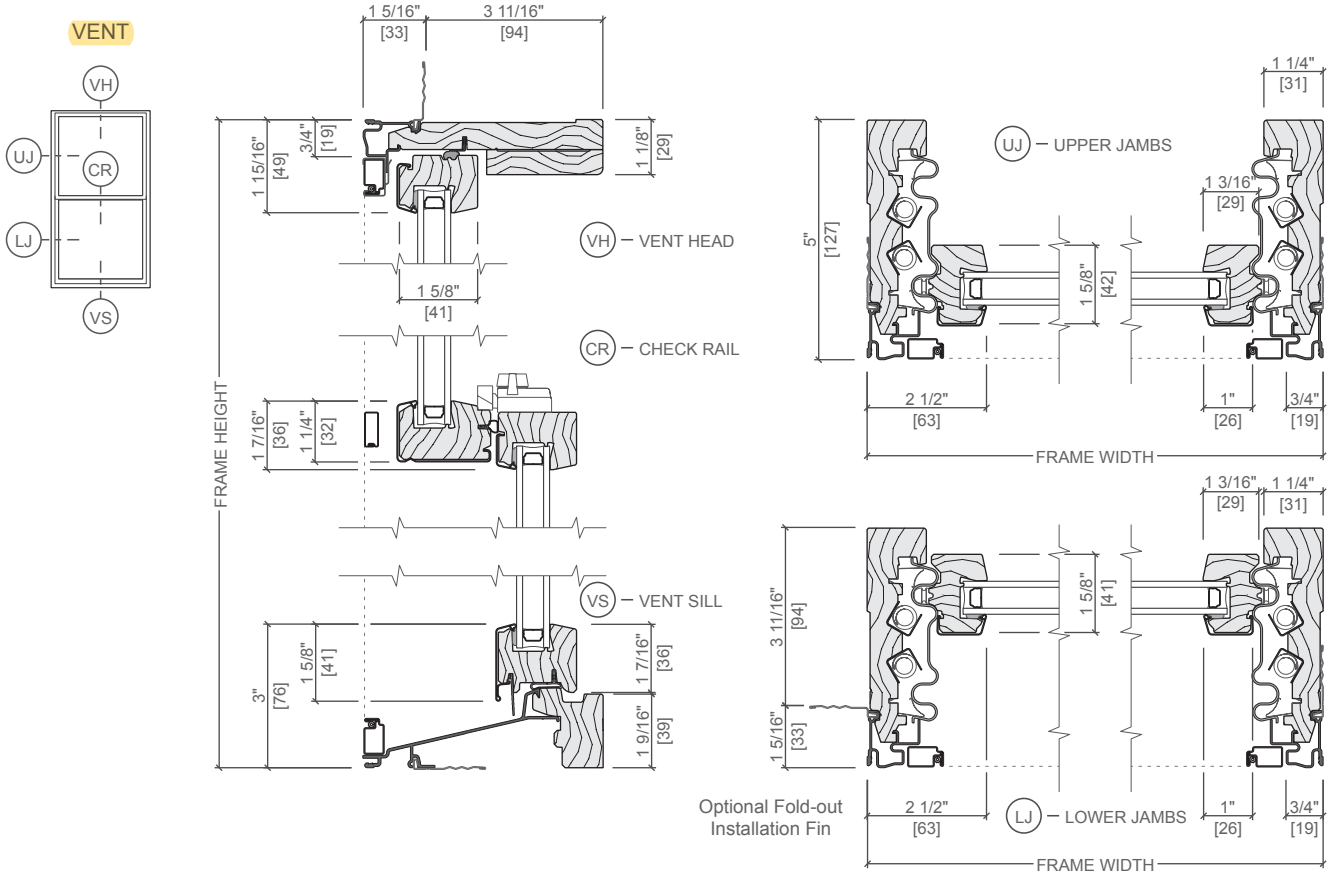

Scale 3" = 1' 0"
All dimensions are approximate.

Lifestyle Series Double-Hung

Unit Sections

FIXED

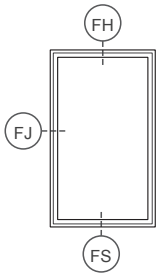

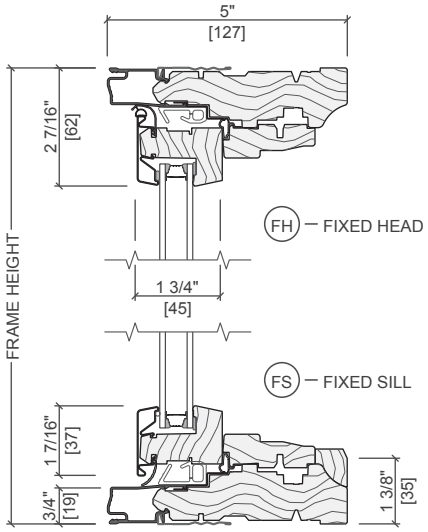

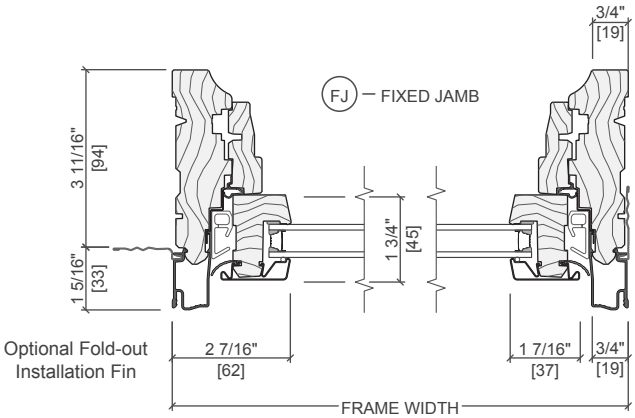

TRANSOMS

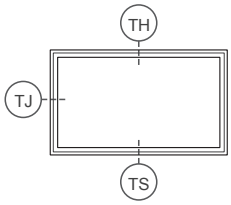

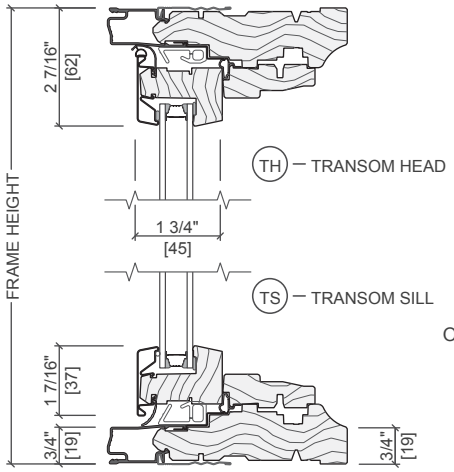

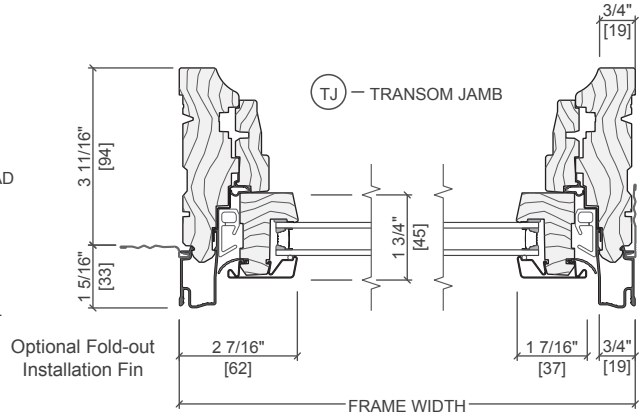

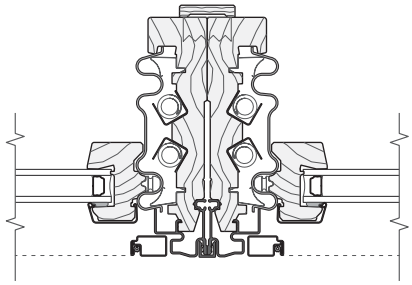

VERTICAL JOINING MULLION
VENT / VENT

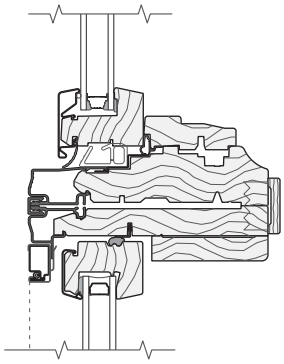

HORIZONTAL JOINING MULLION
TRANSOM / VENT

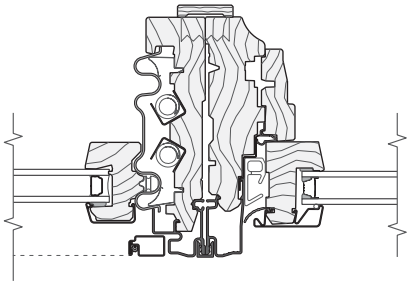

VERTICAL JOINING MULLION
VENT / FIXED

Scale 3" = 1' 0"
All dimensions are approximate.
See www.Pella.com for mullion limitations and reinforcing requirements.



Profile: AutoCAD Architecture (US Imperial)
Node: JHLT-DESKTOP-05

Plotting Parameters
Plotted By:amoss
Dwg File:S:\7517-99 Bradford Street\plotsheets\A3-02 Elevations.dwg
Plotted: Jun 17, 2026 - 6:05pm

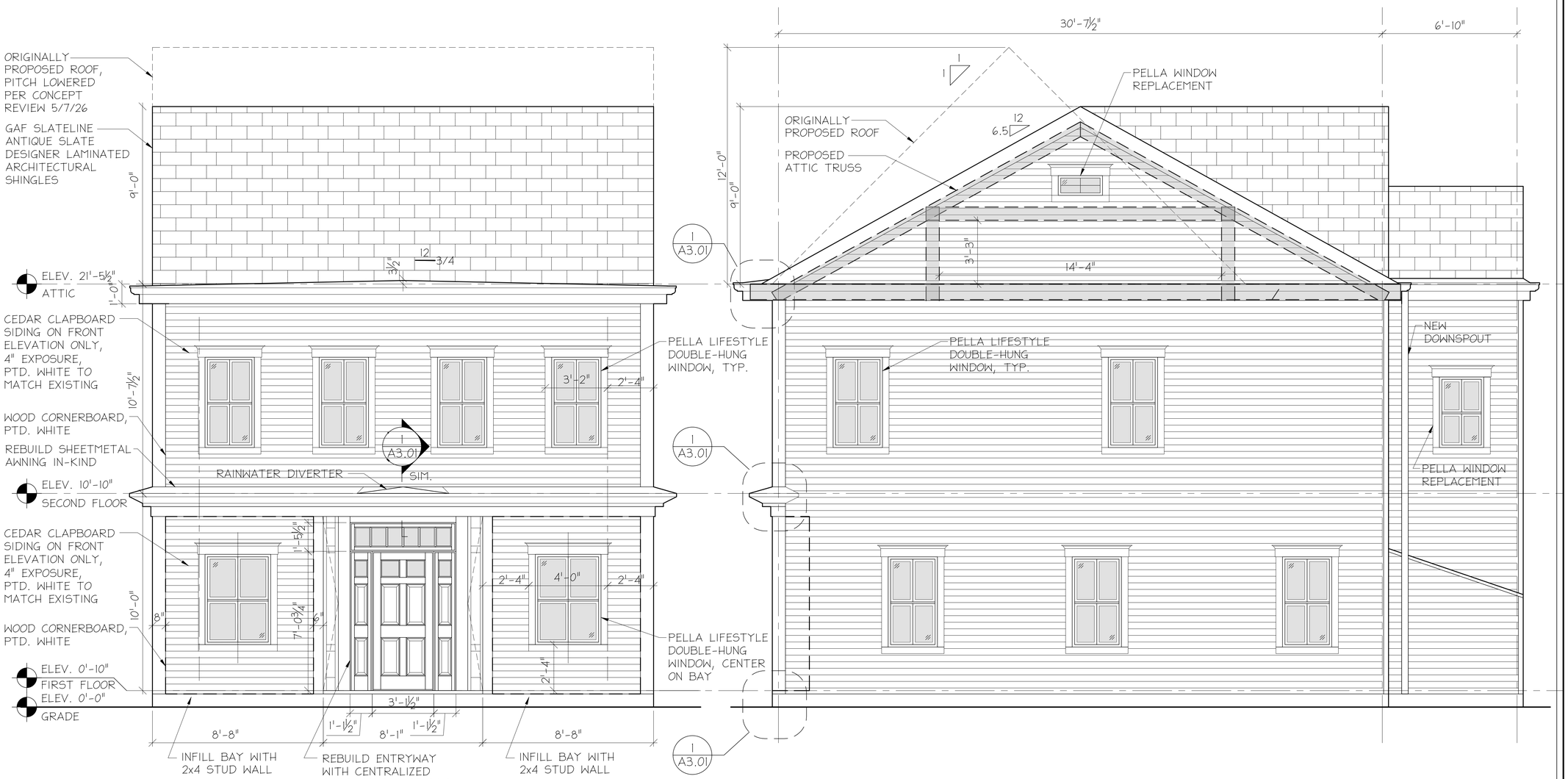

1 A2.01 SOUTH ELEVATION
SCALE: 3/8" = 1'-0"

2 A2.01 EAST ELEVATION
SCALE: 3/8" = 1'-0"

0 2' 4' 8'

GENERAL NOTES:
1: DO NOT SCALE DRAWINGS. Notify Architect if additional dimensioning is required.
2: Contractor shall verify all dimensions in the field and notify Architect of any discrepancies
3: The Contractor shall provide all materials indicated, graphically, as annotated or as needed for a complete and proper installation, and shall notify Architect of any discrepancies in identification of the materials required.
4: Large scale plans of details shall take precedence over smaller scale drawings.
5: All work shall be in conformance with the Federal, State and Local Building Codes and other governing bodies.
6: All work to be performed and inspected as required by the local governing code enforcement office.
7: All work is to be installed in accordance with manufacturer's recommendations and specifications.

COPYRIGHT © 2026 - JHL TECTURE P.C.
DRAWING ALTERATION:
IT IS A VIOLATION OF LAW FOR ANY PERSON, UNLESS ACTING UNDER THE DIRECTION OF LICENSED ARCHITECT, PROFESSIONAL ENGINEER, LANDSCAPE ARCHITECT, OR LAND SURVEYOR TO ALTER ANY ITEM ON THIS DOCUMENT IN ANY WAY.
ANY LICENSEE WHO ALTERS THIS DOCUMENT IS REQUIRED BY LAW TO AFFIX HIS OR HER SEAL AND THE NOTATION "ALTERED BY" FOLLOWED BY HIS OR HER SIGNATURE AND SPECIFIC DESCRIPTION OF THE ALTERATIONS.

#	REVISION DESCRIPTION	DATE	BY
9			
8			
7			
6			
5			
4			
3			
2			
1			

J · H · L
TECTURE
ARCHITECT • ENGINEER, P. C.

190 High Street • Bristol RI 02809
401.396.9630 • Fax 401.410.0079

ISSUED FOR:
REVIEW (05-14-26)

PRELIMINARY ONLY
NOT FOR CONSTRUCTION

THIS PLAN HAS NOT RECEIVED FINAL APPROVAL OF ALL REVIEWING AGENCIES. THIS PLAN IS FOR PROBABLE COST OF CONSTRUCTION ONLY AND IS SUBJECT TO REVISIONS UNTIL ALL APPROVALS ARE OBTAINED AND SHOULD NOT BE USED FOR CONSTRUCTION PURPOSES.

DRAWINGS FOR:
99 BRADFORD

99 BRADFORD STREET
BRISTOL RI, 02809

BUILDING ELEVATIONS

DATE: 05-13-26
SCALE: AS NOTED
DRAWN BY: AM
PROJECT NUMBER: 7517
DRAWING NUMBER: A2.01

Bristol Historic District Commission

Application for Review of Proposed Work - Printable Application

HDC-26-53	Contributing	April 17, 2026

THIS DOCUMENT IS NOT A SUBSTITUTE FOR A BUILDING, ELECTRICAL, SIGN, MECHANICAL, DEMOLITION, SOLAR OR FENCE PERMIT APPLICATION. THESE PERMITS MUST BE APPLIED FOR AND APPROVED BY THE BRISTOL BUILDING DEPARTMENT BEFORE WORK CAN BEGIN.

Project Address	Assessor's Plat/Lot
224 HOPE ST , BRISTOL, RI, 02809	015-0038-000

Applicant	Architect/Engineer	Contractor
Gregory Leonetti		

Property Owner (If Different from Applicant)	Owner Mailing Address (If different than Project Address)
	4480 Post Road Unit 4 East Greenwich, RI 02818

Work Category:	Replacing in Kind

Description of proposed work:
- Addition of black wood shutters around each window
- Repair of brick chimney that does not currently have brick
- Repair of cement stairs with rounded stone to match the current foundation, black iron rail to remain
- Addition of Bilco basement door in back left corner of house parallel to Hope Street

Property History

Building Survey Data	
RIHPHC ID #:	BRIS00626
HISTORIC NAME:	French, Timothy, House
ARCH. STYLE:	Federal
ORIGINAL CONSTRUCTION DATE (est.):	1803
ALTERATIONS TO MAJOR ARCH. SINCE 1978 (Height, Massing, Wall Covering, Trim, Windows. Porches)	

Gregory Leonetti
Applicant's Digital Signature
Date: April 17, 2026

CAI Property Card

Town of Bristol, RI

GENERAL PROPERTY INFORMATION

LOCATION: 224 HOPE ST
ACRES: 0.0574
PARCEL ID: 015-0038-000
LAND USE CODE: 01
CONDO COMPLEX:
OWNER: LEONETTI, GREGORY M. & JULIA C. TE
CO - OWNER:
MAILING ADDRESS: 4480 POST RD

ZONING: R-6
PATRIOT ACCOUNT #: 947

SALE INFORMATION

SALE DATE: 12/30/2024
BOOK & PAGE: 2269-95
SALE PRICE: 605,000
SALE DESCRIPTION:
SELLER: WHITE, GEORGE H TRUSTEE

PRINCIPAL BUILDING AREAS

GROSS BUILDING AREA: 3769
FINISHED BUILDING AREA: 1872
BASEMENT AREA: 936
 # OF PRINCIPAL BUILDINGS: 1

ASSESSED VALUES

LAND: $176,200
YARD: $0
BUILDING: $319,800
TOTAL: $496,000

BUILDING EXTERIOR

BUILDING STYLE: Restored His
UNITS: 1
YEAR BUILT: 1803
FRAME: Wood Frame
EXTERIOR WALL COVER: Masonry
ROOF STYLE: Gable
ROOF COVER: Asphalt Shin

BUILDING INTERIOR

INTERIOR WALL: Plaster
FLOOR COVER: Pine
HEAT TYPE: Radiant Hot
FUEL TYPE: Oil
PERCENT A/C: False
 # OF ROOMS: 8
 # OF BEDROOMS: 3
 # OF FULL BATHS: 1
 # OF HALF BATHS: 1
 # OF ADDITIONAL FIXTURES: 0
 # OF KITCHENS: 1
 # OF FIREPLACES: 0
 # OF METAL FIREPLACES: 0
 # OF BASEMENT GARAGES: 0

SKETCH

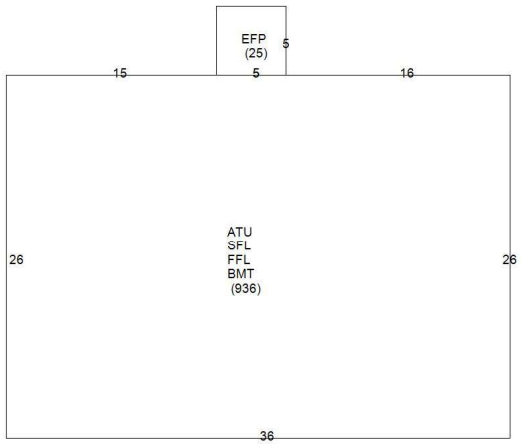

PHOTO



CAI Technologies
www.cai-tech.com
This information is believed to be correct but is subject to change and is not warranteed.





Hover Image to Zoom



SHOP SPRING BLACK FRIDAY DEALS ›

Ekena Millwork

15 in. W x 66 in. H Americraft 2 Equal Louver Exterior Real Wood Shutters (Per Pair), Black

(48) Questions & Answers (25)

$299.00 /pair

Pay $274 after $25 OFF your total qualifying purchase upon opening a new card.

Apply for a Home Depot Consumer Card

- View More Details

Color/Finish: **Black**

Shutter Height (in.): **66**

66

Shutter Width (in.): **15**

12 | 15 | 18



Hover Image to Zoom



SHOP SPRING BLACK FRIDAY DEALS ›

Ekena Millwork

15 in. W x 64 in. H Americraft 2 Equal Louver Exterior Real Wood Shutters Per Pair in Unfinished

(49) Questions & Answers (25)

$209.00 /pair

Pay $184 after $25 OFF your total qualifying purchase upon opening a new card.

Apply for a Home Depot Consumer Card

- View More Details

Color/Finish: **Unfinished**

Shutter Height (in.): **64**

64

Shutter Width (in.): **15**

Specifications

Dimensions

Shutter Height (in.)	64
Shutter Width (in.)	15

Details

Color Family	Brown
Color/Finish	Unfinished
Features	Paintable, Stainable
Material	Wood
Returnable	90-Day
Shape	Rectangular
Shutter Top Shape	Straight Top
Shutter Type	Louvered
Shutter Usage	Functional

Warranty / Certifications

Manufacturer Warranty	N/A

Product Details

About This Product

Hawaiian mango wood shutters are an eco-friendly hand-crafted decorative wood product. Produced from the high-quality mango wood tree, a distinctive textured wood grain offers golden-brown pattern variations. These durable, hardwood exterior shutters age beautifully, while offering a sustainable building product. Available in stunning unfinished stain grade, primed, or one of our long-lasting solid color wood stains, that offer durability against cracking and peeling. Hawaiian mango wood is a highly desired artisan wood and is now available in affordable, durable, and environmentally friendly exterior shutters.

Highlights

- Hawaiian mango wood is both eco-friendly and durable
- Distinctive textures and patterns offer a beautiful pair of exterior shutters
- Strength, density, and attractive looks will instantly upgrade your house
- Available in both stain grade and a variety of beautiful, hand-stained finishes
- Sustainable mango wood offers affordable and environmentally friendly shutter product
- Choose from classic and modern shutter designs
- Return Policy
- California residents see Prop 65 WARNINGS

Product Information

Internet # 322801235
Model # RW101LV15X64UNH



La Pietra
THINSTONE VENEERS

0

Specs

Cuts

Corners

Thickness

Applications

Installation

Available types

- Thinstone 3/4" – 1 1/4"
- 3" – 5" Veneer

DISCLAIMER FOR NATURAL STONE VARIATION:

Natural stone varies in color, veining, and pattern from piece to piece. La Pietra is not responsible for photos used in color literature, websites, or emails, as they may not accurately reflect actual material. Photos are used to reflect the general aesthetic of the material and should not be used for color matching. Always request a free sample from your dealer.


CT NATURAL ROUNDS


WEATHERED ROUNDS - SM & MED


WEATHERED ROUNDS - SM & MED


WEATHERED ROUNDS - MED







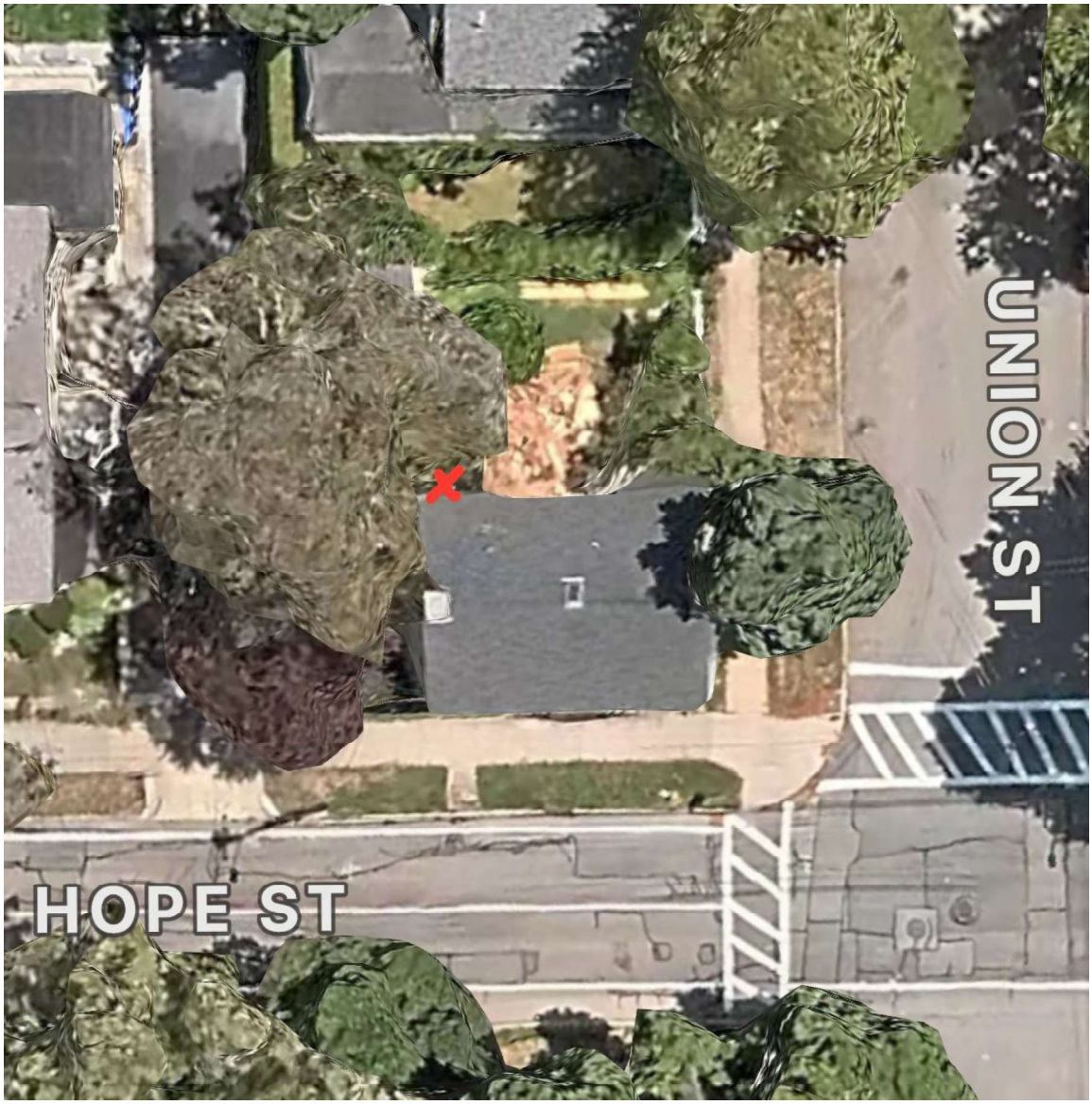
UNION ST
HOPE ST


MARVIN
VYCOR PLUS

BILCO TYMAN group

Basement Doors

Basement doors are ideal for access to basement storage areas and for moving large items into finished basement areas. The wide opening allows storage items such as deck and patio furniture, and large items such as pool tables and furniture, to be easily moved in and out of a basement. Doors meet IRC 2023 building code requirements for emergency egress in finished basement living areas and feature weather resistant construction.



Classic Series
Steel Sided

Features:

- Patented gas spring lift assistance for improved operation
- Baked-on Sherwin Williams primer provides durable base for finish paint
- Slide bolt locking mechanism (optional keyed lock kit available)
- Flanged construction and J-channel header shed water and prevent binding due to ice and snow, permitting all-season use
- BILCO also offers a basement door weatherstrip kit and keyed lock kit. *(See page 11 for all basement door accessories)*

Skip the paint!

Order your door prefinished to match your home. The factory-applied polyester resin finish provides a durable, weather-resistant coating and eliminates the need to paint your door after installation.

(See page 4 for more information)



BILCO TYMAN group

Basement Doors

Basement Door Measuring Guide

Follow the instructions below to calculate the proper size door for your areaway. An electronic version of this sizing guide is also available at BILCO.com. Please contact BILCO if you are unable to find a standard door to fit your areaway.

Areaway — Flat Foundation

Ultra Series and Classic Series Doors

1. Discard your old door and measure (in inches) the dimensions of the areaway foundation.
2. Measure dimension W1, the inside width, and dimension W2, the outside width of the areaway foundation walls. Record your dimensions below and make the calculation shown.
3. Measure dimension L1, the inside length, and dimension L2, the outside length of the areaway foundation walls. Record your dimensions and make the calculation shown.
4. Measure dimension H1, the height from the top of the areaway foundation to the top of the opening in the house foundation.
5. Select the door from the table to the right with a width between W1 and W2 and length between L1 and L2.

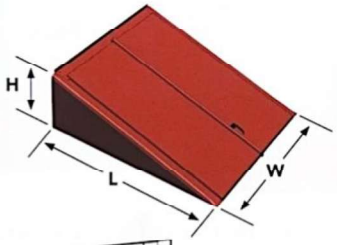

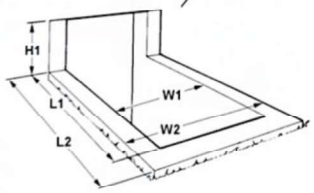

Basement Door Dimensions

Door Size	Width (W) (inches)	Length (L) (inches)	Height (H) (inches)	Door Opening	
				Length (inches)	Width (inches)
B	51	64	22	60	44
C*	55	72	19½	67	48
O	47	58	30	58	40
SL	51	43¼	52	60	44

*Ultra Series Doors are available in Size C only

Record your foundation dimensions here

Width	Length	Height
W1 + 4" = _____ W2 = _____	L1 + 2" = _____ L2 = _____	H1 = _____

Extensions are available to increase the door length for Size C Ultra and Size C Classic Series doors. Classic Series extensions are available in 6", 12", 18", 24" and 30" lengths and two or more can be mounted back to back to increase the door length. Ultra Series extensions are available in 6" and 12" lengths and two extensions can be combined to increase the door length.

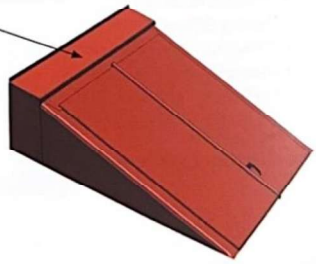

Bristol Historic District Commission

Application for Review of Proposed Work - Printable Application

HDC-26-74		May 29, 2026

THIS DOCUMENT IS NOT A SUBSTITUTE FOR A BUILDING, ELECTRICAL, SIGN, MECHANICAL, DEMOLITION, SOLAR OR FENCE PERMIT APPLICATION. THESE PERMITS MUST BE APPLIED FOR AND APPROVED BY THE BRISTOL BUILDING DEPARTMENT BEFORE WORK CAN BEGIN.

Project Address	Assessor's Plat/Lot
570 HOPE ST , BRISTOL, RI, 02809	013-0045-000

Applicant	Architect/Engineer	Contractor
Bristol Warren Regional School District		Legacy General Contractors

Property Owner (If Different from Applicant)	Owner Mailing Address (If different than Project Address)
	50 Asylum Road, Warren RI 02885

Work Category:	Replacing in Kind

Description of proposed work:
Repl exterior door that has significant damage

Property History

Building Survey Data	
RIHPHC ID #:	
HISTORIC NAME:	
ARCH. STYLE:	
ORIGINAL CONSTRUCTION DATE (est.):	
ALTERATIONS TO MAJOR ARCH. SINCE 1978 (Height, Massing, Wall Covering, Trim, Windows. Porches)	

Terri Moreira
Applicant's Digital Signature
Date: May 29, 2026

CAI Property Card

Town of Bristol, RI

GENERAL PROPERTY INFORMATION

LOCATION: 570 HOPE ST
ACRES: 1.06
PARCEL ID: 013-0045-000
LAND USE CODE: 79
CONDO COMPLEX:
OWNER: TOWN OF BRISTOL
CO - OWNER:
MAILING ADDRESS: 10 COURT ST

ZONING: PI
PATRIOT ACCOUNT #: 778

SALE INFORMATION

SALE DATE: 3/6/2008
BOOK & PAGE: 1423-101
SALE PRICE: 0
SALE DESCRIPTION:
SELLER: COLT, SAMUEL

PRINCIPAL BUILDING AREAS

GROSS BUILDING AREA: 30922
FINISHED BUILDING AREA: 23016
BASEMENT AREA: 15344
 # OF PRINCIPAL BUILDINGS: 1

ASSESSED VALUES

LAND: $421,400
YARD: $0
BUILDING: $3,862,900
TOTAL: $4,284,300

BUILDING EXTERIOR

BUILDING STYLE: Schools
UNITS: 1
YEAR BUILT: 1900
FRAME: Masonry
EXTERIOR WALL COVER: Brick
ROOF STYLE: Hip
ROOF COVER:

BUILDING INTERIOR

INTERIOR WALL:
FLOOR COVER:
HEAT TYPE: Steam w/Boil
FUEL TYPE: Oil
PERCENT A/C: True
 # OF ROOMS: 0
 # OF BEDROOMS: 0
 # OF FULL BATHS: 0
 # OF HALF BATHS: 0
 # OF ADDITIONAL FIXTURES: 0
 # OF KITCHENS: 0
 # OF FIREPLACES: 0
 # OF METAL FIREPLACES: 0
 # OF BASEMENT GARAGES: 0

SKETCH

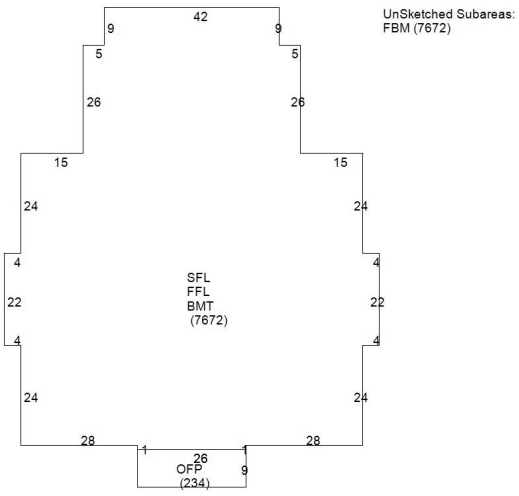

PHOTO






3

Bristol Historic District Commission

Application for Review of Proposed Work - Printable Application

HDC-26-72	Contributing	May 22, 2026

THIS DOCUMENT IS NOT A SUBSTITUTE FOR A BUILDING, ELECTRICAL, SIGN, MECHANICAL, DEMOLITION, SOLAR OR FENCE PERMIT APPLICATION. THESE PERMITS MUST BE APPLIED FOR AND APPROVED BY THE BRISTOL BUILDING DEPARTMENT BEFORE WORK CAN BEGIN.

Project Address	Assessor's Plat/Lot
142 HIGH ST , BRISTOL, RI, 02809	019-0106-000

Applicant	Architect/Engineer	Contractor
Newport Electric Construction		Newport Electric Construction

Property Owner (If Different from Applicant)	Owner Mailing Address (If different than Project Address)
Cornelia Murphy & Bart Ferris	

Work Category:	Addition to Structure(s)

Description of proposed work:
Install rooftop Solar PV system consisting of (12) all black REC460w panels on rear cottage.

Property History

Building Survey Data	
RIHPHC ID #:	BRIS00148
HISTORIC NAME:	
ARCH. STYLE:	Late Victorian
ORIGINAL CONSTRUCTION DATE (est.):	1870 ca
ALTERATIONS TO MAJOR ARCH. SINCE 1978 (Height, Massing, Wall Covering, Trim, Windows. Porches)	
Vinyl 1/1 replacement windows.	

David McMullen
Applicant's Digital Signature
Date: May 22, 2026

CAI Property Card

Town of Bristol, RI

GENERAL PROPERTY INFORMATION

LOCATION: 142 HIGH ST
ACRES: 0.1708
PARCEL ID: 019-0106-000
LAND USE CODE: 28
CONDO COMPLEX:
OWNER: MURPHY, CORNELIA TRUSTEE
CO - OWNER: CORNELIA M. MURPHY TRUST
MAILING ADDRESS: 142 HIGH ST

ZONING: R-6
PATRIOT ACCOUNT #: 1367

SALE INFORMATION

SALE DATE: 4/6/2006
BOOK & PAGE: 1287-266
SALE PRICE: 0
SALE DESCRIPTION:
SELLER: MURPHY, CORNELIA

PRINCIPAL BUILDING AREAS

GROSS BUILDING AREA: 6401
FINISHED BUILDING AREA: 3614
BASEMENT AREA: 1074
 # OF PRINCIPAL BUILDINGS: 2

ASSESSED VALUES

LAND: $134,400
YARD: $0
BUILDING: $636,200
TOTAL: $770,600

BUILDING EXTERIOR

BUILDING STYLE: Restored His
UNITS: 1
YEAR BUILT: 1830
FRAME: Wood Frame
EXTERIOR WALL COVER: Clapboard
ROOF STYLE: Gable
ROOF COVER: Asphalt Shin

BUILDING INTERIOR

INTERIOR WALL: Drywall
FLOOR COVER: Hardwood
HEAT TYPE: Radiant Hot
FUEL TYPE: Oil
PERCENT A/C: False
 # OF ROOMS: 12
 # OF BEDROOMS: 4
 # OF FULL BATHS: 3
 # OF HALF BATHS: 0
 # OF ADDITIONAL FIXTURES: 0
 # OF KITCHENS: 2
 # OF FIREPLACES: 1
 # OF METAL FIREPLACES: 0
 # OF BASEMENT GARAGES: 0

SKETCH

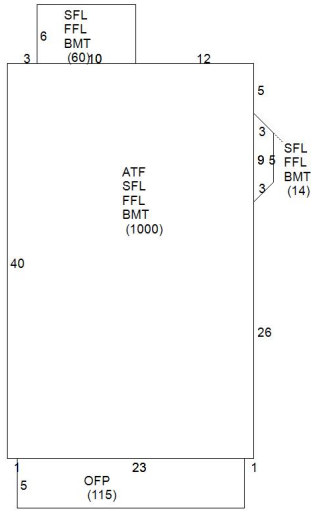

PHOTO



RESIDENTIAL SOLAR INSTALLATION CONTRACT

This Residential Solar Installation Contract (this "Contract") is made and entered into on the date set forth below by and between Newport Electric Construction Corp. ("Newport Electric Construction Corp.", "We", "Us" or "Our") whose address is 121 Broadcommon Rd, Bristol, RI 02809 and the customer(s) ("Customer", "You", or "Your") listed below (Newport Electric Construction Corp. and Customer are sometimes individually referred to as a "Party" or collectively as the "Parties").

Customer(s)	**Installation Address of Customer (the "Property")**
Thomas Bartley Ferris II	142 High St., Bristol, RI 02809
Cornelia Murphy	

System Specifications:	**5.52 kW (DC) System Size** 12 REC 460 W Panels 12 Enphase IQ8X Microinverters
TOTAL SALE PRICE	**$23,708.05**
REF Grant	**($9,108.00)**
SOLAR SYSTEM NET COST**	**$14,600.05**

***REF Grant:** This Contract is contingent upon approval of the REF grant. If the grant is not approved, you can choose to move forward with other options provided at that time. *Timeline is contingent upon grant approval date, controlled by REF.*

Terms of Payment: This Contract is contingent upon Your approval for financing by the loan provider and Your acceptance of such financing for the System purchased by You pursuant to this Contract. A down payment of $0 due at signing as nonrefundable deposit and $0 due at final inspection and approval of all permits. Loan amount: $___14,600.05__. Final payment of $_9,108.00_ from REF to NEC after system completion.

Timeline: Based on the specifications and conditions set forth in this Contract, we estimate that the commencement of the installation will occur within ninety (90) days of the date hereof and the installation will be substantially completed within one hundred twenty (120) days of the date hereof:__May 1, 2026___ (Grant Round 26-1)

BY YOUR SIGNATURE BELOW, YOU ACKNOWLEDGE AND AGREE THAT YOU HAVE READ UNDERSTAND AND AGREE TO THIS CONTRACT INCLUDING THE TERMS AND CONDITIONS THAT ARE PART OF THIS CONTRACT.

YOU, THE BUYER, MAY CANCEL THIS TRANSACTION AT ANY TIME PRIOR TO MIDNIGHT OF THE SEVENTH BUSINESS DAY AFTER THE DATE OF THIS TRANSACTION. SEE ATTACHED NOTICE OF CANCELLATION FORM FOR AN EXPLANATION OF THIS RIGHT.

Signed by:
21557C1E5EFE450...
4/22/2026
Date

Signed by:
1A00DCB32C59436...
4/22/2026

DocuSigned by:
Dana Goodman
F6252BE56ED94F6...
4/22/2026
Newport Electric Construction Corp. **Date**

YOU WILL RECEIVE THE FOLLOWING FROM US

1.Contract Inclusions

Through installation, the following items are included with the photovoltaic solar energy system ("System") and Installation (as defined below) under and pursuant to this Contract:

a. 12 460 W panels;
b. 12 Enphase IQ8X microinverters;
c. Monitoring device and monitoring;
d. all standard Installation components;
e. all electrical work supervised by a Master Electrician who is licensed and/or certified under applicable law;
f. all permitting applications, costs and permit service fees;
g. permit inspection oversight and scheduling;
h. assistance with homeowner associations and historic preservation approval processes (if applicable);
i. utility interconnection application, oversight and meter replacement scheduling;
j. state and local rebate/grant applications preparation and processing (if applicable);
k. solar renewable energy credit applications preparation and processing (if applicable);
l. System remote monitor set-up and training;
m. System training and orientation; and
n. Any other inclusions set forth in an addendum to this Contract (if applicable).

2.System Design, Installation and Operational Date

We will install the System at the Property in the areas to be marked on a diagram to be approved by You prior to beginning the Installation (the "System Design"). "Installation" means the process by which the System components are physically attached to the Property. "Operational Date" means the date upon which, pursuant to applicable law, You have received all applicable building and electrical permits or other necessary permits and the System is authorized by the local electric utility to produce electricity.

3.Warranties, Guarantees and Other Options

Upon and after installation, the following items are included as part of Your ongoing relationship with Us.

a. Newport Electric Construction Corp. Limited Workmanship Warranty

We warrant that, under normal use and service conditions, the System will be free from defects in workmanship for 10 years following the date of Installation (the "Limited Workmanship Warranty"). If a defect in workmanship is discovered, We will, at no additional cost to You, provide the labor and materials to restore the System to its originally installed state.

The Limited Workmanship Warranty does not cover the following: power outages; damage to the System caused by animals; any Force Majeure Event; damage caused by unforeseeable events; or normal wear and tear of the roof or other site of the System, sub-structure, siding, plumbing or electrical work not related to the System.

The Limited Workmanship Warranty does not cover any problems caused by improper maintenance of the System or any other improper action by any Party other than Us.

No work will be done under the terms of the Limited Workmanship Warranty if You are delinquent in payments under this Contract.

b. Manufacturers' Warranties

The System includes a Limited Manufacturer's Warranty on [System panels] Solar Module Performance and Limited Manufacturer's Warranty on [System Inverter] (Your "Manufacturers' Warranties").

c. Newport Electric Construction Corp. Servicing Your Manufacturers' Warranties

We will service Your Manufacturers' Warranties during the term of the Limited Workmanship Warranty. You authorize Us to act on Your behalf to administer and support Your Manufacturers Warranties.

d. Newport Electric Construction Corp. Roof Warranty

We warrant any damage to Your roof within a five (5) inch radius of roof penetrations caused during Installation for the lesser of the length of the Limited Workmanship Warranty or the length of any existing warranty for Your roof.

Claims under the roof warranty is limited to the remediation and repair of the roof structure and is not intended to cover damage to the roof under normal use and service conditions nor is the roof warranty intended to cover other pre-existing conditions otherwise not detected by you prior to Our installation..

e. Additional Work Authorization

During any warranty, option, or any other maintenance related work, if We find problems in an area that have not been caused by the Installation or if the problems are not an actual problem of the System (e.g. shade or un- authorized alterations to the System), You will be responsible for paying for any new parts and materials, and We reserve the right to charge You a service charge of $100 per hour with the minimum service charge equal to $200.

You hereby acknowledge that a decision on Your part to not authorize recommended work by us may void some or all of Your warranties and rights in this contract such as the Limited Workmanship Warranty, Manufacturers' Warranties and the Roof Warranty.

4.Unanticipated Site Conditions

After the execution of this Contract, if We discover site conditions that increase the cost to perform the Installation, at Our choice, (a) We may unilaterally rescind this Contract with no liability to Us whatsoever and We shall issue a full refund of all deposits paid to Us; or (b) if the Parties agree, the total sale price may be renegotiated to reflect the revised cost of the Installation.

YOUR RIGHTS AND RESPONSIBILITIES

5.Customer Obligations

You agree to the following:

a. pay all amounts when due in accordance with the terms of this Contract;
b. make available to Us, at Your sole cost and expense, all utilities including electricity to enable Us to perform the Installation;
c. allow Our representatives to access the Property at all reasonable times prior to the completion of the Installation;
d. remove and replace appliances, floor coverings, bushes, and any other obstacles, hazards, or breakable items from the areas required to perform the Installation (We are not responsible for replacement of or damage to these items if they are removed by Us);
e. notify Us immediately upon discovery of an emergency condition relating to the System, damage to the System, or theft of the System;
f. promptly notify Us if You discover that any component of the System is not producing electricity;
g. only have the System repaired pursuant to the Limited Workmanship Warranty;
h. not modify the Property in a way that shades the System;
i. keep trees and bushes trimmed so that the System receives as much sunlight as it did at Installation;
j. not do anything, permit or allow to exist any condition or circumstance at the Property which would cause the System not to operate as intended;
k. permit Us, after providing reasonable notice, to inspect the System for proper operation, and to make any necessary repairs; and
l. not make any modifications, improvements, revisions or additions to the System without Our prior written consent.

In the event that You fail to comply with the provisions of this Section 5, We reserve the right to void Your Limited Workmanship Warranty.

6. Refund of Deposit

In addition to Your rights to cancel pursuant to the Notice of Cancellation attached to this Contract, prior to the start of the Installation, You may cancel this Contract and receive a refund of any deposit You paid reduced by any expenses actually incurred by Us. Should You cancel this Contract within seven (7) days after being informed by Us of a necessary System Design revision or change to estimated System production, but before the start of Installation, You will be entitled to a full refund of any deposit paid.

7. Contract Transfer by Customer

You may not assign this Contract without Our prior written consent; provided, however, that You may assign this Contract together with the applicable warranties and guarantees to any third-party purchaser of the Property without Our prior written consent so long as (i) You provide notice to Us prior to the effective date of the assignment at the following email address: solar@newportelectric.net and (ii) such third-party expressly agrees to assume all of Your duties and obligations as set forth herein and as may be set forth in any related or other agreement entered into by the Parties in connection with this Contract.

8.Ownership of Property

As of the date of Your execution of this Contract, You represent to Us that you are the owner (beneficially and of record) in fee simple of the Property.

MISCELLANEOUS

9.Insurance

We will carry commercial general liability insurance covering personal injury and property damage caused solely by the work performed under this Contract in an amount not less than $5,000,000.

10. Payment and NSF Fees

An interest charge of two percent (2%) per month will be charged on any outstanding balance not paid when due as set forth in this Contract. In the event the account is turned over to an attorney for collection, You shall pay interest charges and reasonable attorney's fees to the full extent permitted by applicable state and federal law. You are subject to Non-Sufficient Fund (NSF) fees at the lesser of (i) twenty-five dollars ($25.00) or (ii) the maximum amount permitted by applicable state and federal law for each check issued by You which is subsequently returned or dishonored for any reason. We are not responsible for notifying You of checks that have not been honored or returned electronic payments. We may report certain terms of this Contract along with Our payment experience with You to local credit bureaus.

11. Payment Default and Remedies

You shall be in default if You fail to pay any amount due under this Contract within thirty (30) days of such payment's applicable due date as set forth in this Contract. In the event of any breach by You of Your payment obligations under this Contract, We may be permitted and You hereby expressly authorize Us to, at Our sole and exclusive option, to access the Property at all reasonable times and disconnect, disable or repossess the System. We may without any prior notice to You, except as required by non-waivable provisions of applicable state and federal law, enforce all rights and seek all remedies available to Us under this Contract or under any law, which rights and remedies include, to the extent permitted by applicable state and federal law, the right to take possession of and remove the System from the Property or any other location. To the maximum extent permitted by applicable state and federal law, You waive all appraisement, valuation, anti-deficiency and redemption laws now or hereafter in effect. We have the right to set off any amount due to You under a SREC Agreement (as defined in Section 7) against any amounts You have not paid Us in accordance with the terms of this Contract.

12. Entire Contract

This Contract cannot be modified or discharged orally unless consent in writing is made by the Parties, and this Contract shall be binding upon the heirs, successors, and assigns of the Parties. This Contract supersedes all agreements previously made between the Parties. There are no other understandings or agreements. If there is an addendum to this Contract, the terms of that addendum supersede any and all contrary terms in this Contract. Any changes to the terms and conditions of this Contract must be approved in writing by a sales manager. Unless otherwise agreed to in writing by Us, the Installation does not include roof repair or replacement; painting, drywall repair, trench digging, engineering and/or main structure reinforcement costs; civil work; electrical panel upgrades; any upgrades to utility-owned equipment required by applicable interconnection standards; or the repair of any pre-existing electrical equipment or code violations required by municipal code, applicable law or inspectors necessary to approve inspection of the System but not directly related to the work performed by Us to install the System or anything else not clearly specified in this Contract.

13. Contract Transfer by Newport Electric Construction Corp.

You agree that We can assign any of Our rights under this Contract without Your consent and that the person to whom We assign this Contract shall be entitled to all of Our rights under this

Contract. You understand that Your rights will not be affected by such assignment.

14. Disclosure, No Waiver, Governing Law, Venue and Advertising

You certify that the information furnished to Us is true and correct and authorize Us to obtain from any source of information that We may deem necessary to verify or supplement the information furnished. No delay by Us in enforcing any right hereunder shall be construed as a waiver of that or any other right; nor shall any waiver of any default by Us be construed to extend to any other default by You. A waiver by Us of any right or default shall be effective only if it is in writing. The Parties agree that this Contract shall be governed by and construed and interpreted in accordance with the laws of the jurisdiction in which the Property is located, and any action brought in connection with this Contract shall be brought only in the state and federal courts thereof. We shall have the right to post a sign advertising Newport Electric Construction Corp. on the Property during the performance of the Installation, unless prohibited by community or homeowner association rules or regulations.

15. Force Majeure

Neither Party will be in default of this Contract for any delay or failure in the performance under this Contract if the damage, delay or failure results from any event beyond the non-performing Party's reasonable control (a "Force Majeure Event"). Force Majeure Events includes acts of God such as storms, fires, floods, lightning and earthquakes, war, riot, acts of a public enemy or other civil disturbance, or a strike, walkout, lockout or other significant labor dispute. Force Majeure does not include economic hardship of either Party, a power grid failure (except if caused directly by a Force Majeure event), a failure or delay in the granting of permits, or insufficiency, unavailability, failure, or diminishment of solar resources, except as a result of an event that would otherwise qualify as a Force Majeure Event. Force Majeure Events cannot be attributable to fault or

negligence on the part of the Party claiming Force Majeure and must be caused by things beyond that Party's reasonable control.

16. Community Program

If You are purchasing Your System through a community sponsored program (the "Program"), You agree that Your Community has not made any representations or warranties to You regarding the Program and is not a party to this Contract. Further, You agree that Your Community shall have no liability or obligation to You under this Contract. "Community" means Your local town, city or similar municipality and any non-profit or other organization or association sponsoring and/or organizing the Program including their employees, officers, directors, agents and affiliates.

LIMITATION OF LIABILITY

17. Limitation of Liability

We assume no liability for damage to the following: improperly installed, improperly maintained, defective, old, or deteriorated roof coverings or supports; sub-roof within the serviced area; siding; exterior covering or paint; underground pipes; sewer or drain lines; tanks; or any other non-visible installations. Our liability for any covered damages shall be limited to the Installation area specified in the System Design. TO THE MAXIMUM EXTENT PERMITTED BY APPLICABLE LAW, IN NO EVENT SHALL NEWPORT ELECTRIC CONSTRUCTION CORP., ITS OFFICERS, EMPLOYEES, AFFILIATES, OR ANY CONTRACTOR OR SUBCONTRACTOR BE LIABLE FOR CONSEQUENTIAL, INCIDENTAL, PUNITIVE, EXEMPLARY, SPECIAL OR INDIRECT DAMAGES OR LOSSES OF ANY NATURE WHATSOEVER IN CONNECTION WITH OR RELATING TO THIS CONTRACT IRRESPECTIVE OF WHETHER SUCH DAMAGES ARE REASONABLY FORESEEABLE AND IRRESPECTIVE OF WHETHER SUCH DAMAGES ARISE OUT OF NEGLIGENCE, STRICT LIABILITY, CONTRACT, AGREEMENT, OPERATION OF LAW, OR OTHERWISE. TO THE EXTENT PERMITTED BY APPLICABLE LAW, NEWPORT ELECTRIC CONSTRUCTION CORP.'S TOTAL LIABILITY UNDER THIS CONTRACT, SHALL NOT EXCEED THE TOTAL SALE PRICE. EXCEPT AS OTHERWISE SET FORTH IN THIS CONTRACT, NEWPORT ELECTRIC CONSTRUCTION CORP. MAKES NO WARRANTIES OR GUARANTEES EXPRESS OR IMPLIED, AND NEWPORT ELECTRIC CONSTRUCTION CORP. DISCLAIMS ANY WARRANTY IMPLIED BY LAW, INCLUDING IMPLIED WARRANTIES OF MERCHANTABILITY OR FITNESS, FOR A PARTICULAR PURPOSE AND IMPLIED WARRANTIES OF TITLE, CUSTOM, INFRINGEMENT OR USAGE.

Thank you for choosing Newport Electric Construction Corp.! Should You have any questions or concerns, please contact Our Customer Service Department at solar@newportelectric.net.

Docusign Envelope ID: EBAD852C-3FF6-8A2D-83CC-900FACF47A68

NOTICE OF CANCELLATION

(enter date of transaction)

4/22/2026

(Date)

You may CANCEL this transaction, without any Penalty or Obligation, within SEVEN BUSINESS DAYS from the above date.

If you cancel, any property traded in, any payments made by you under the contract or sale, and any negotiable instrument executed by you will be returned within TEN BUSINESS DAYS following receipt by the seller of your cancellation notice, and any security interest arising out of the transaction will be cancelled.

If you cancel, you must make available to the seller at your residence, in substantially as good condition as when received, any goods delivered to you under this contract or sale; or you may, if you wish, comply with the instructions of the seller regarding the return shipment of the goods at the seller's expense and risk.

If you do make the goods available to the seller and the seller does not pick them up within 20 days of the date of your Notice of Cancellation, you may retain or dispose of the goods without any further obligation. If you fail to make the goods available to the seller, or if you agree to return the goods to the seller and fail to do so, then you remain liable for performance of all obligations under the contract.

To cancel this transaction, mail or deliver a signed and dated copy of this Cancellation Notice or any other written notice to Newport Electric Construction Corp.
121 Broadcommon Rd, Bristol, RI 02809,
NOT LATER THAN MIDNIGHT OF _____
(Date)

I HEREBY CANCEL THIS TRANSACTION.

(Date) _____

(Buyer's signature)_____




LMP
PAINTING
(401) 545-4480


RUTH S. PEARSE
COTTAGE
1876



NEW PHOTOVOLTAIC ROOF MOUNT SYSTEM

12 MODULES-ROOF MOUNTED - 5.520 kW DC, 4.560 kW AC, 142 HIGH ST, BRISTOL, RI 02809

NEW PV SYSTEM SPECIFICATIONS:

SYSTEM SIZE:	
DC SIZE:	5.520 KW DC-(STC)
AC SIZE:	4.560 KW AC
MODULE TYPE & AMOUNT:	(12) REC SOLAR REC 460AA PURE-RX[460W]
MODULE DIMENSIONS:	(L/W/H) 68.03"/47.40"/1.18"
INVERTER:	(12) ENPHASE IQ8X-80-M-US [240V]
UTILITY NAME:	RI ENERGY
METER NUMBER:	199 621 409
AHJ:	TOWN OF BRISTOL
INTERCONNECTION METHOD:	LOAD SIDE TAP

GOVERNING CODES

ADOPTED CONSTRUCTION CODES

- 2021 INTERNATIONAL BUILDING CODE, IBC
- 2021 INTERNATIONAL RESIDENTIAL CODE, IRC
- 2023 NATIONAL ELECTRIC CODE

PROJECT NOTES

1.1.1 THIS PHOTOVOLTAIC (PV) SYSTEM SHALL COMPLY WITH THE RELEVANT YEAR OF THE NATIONAL ELECTRIC CODE (NEC), ALL MANUFACTURER'S LISTING AND INSTALLATION INSTRUCTIONS, AND THE RELEVANT CODES AS SPECIFIED BY THE AUTHORITY HAVING JURISDICTION'S (AHJ) APPLICABLE CODES.
1.1.2 THE UTILITY INTERCONNECTION APPLICATION MUST BE APPROVED AND THE PV SYSTEM MUST BE INSPECTED PRIOR TO OPERATION
1.1.3 ALL PV SYSTEM COMPONENTS; MODULES, UTILITY-INTERACTIVE INVERTERS, AND SOURCE CIRCUIT COMBINER BOXES ARE IDENTIFIED AND LISTED FOR USE IN PHOTOVOLTAIC SYSTEMS AS REQUIRED BY NEC AND OTHER GOVERNING CODES
1.1.4 ALL SIGNAGE TO BE PLACED IN ACCORDANCE WITH LOCAL BUILDING CODE. IF EXPOSED TO SUNLIGHT, IT SHALL BE UV RESISTANT. ALL PLAQUES AND SIGNAGE WILL BE INSTALLED AS REQUIRED BY THE NEC AND AHJ.

DESIGN CRITERIA

ROOF SURFACE TYPE: ASPHALT SHINGLES
ROOF FRAMING: RAFTER 2"X8" @ 16" O.C.
GROUND SNOW LOAD: 30 PSF
WIND SPEED: 128 MPH
WIND EXPOSURE: B
RISK CATEGORY: II
ROOF LIVE LOAD: 20 PSF TYPICAL

SHEET INDEX:

PV 0.0:	COVER SHEET
PV 1.0:	SITE PLAN
S 1.1:	MOUNT DETAILS
S 1.2:	ROOF SECTION
E 1.1:	3-LINE DIAGRAM
E 1.2:	NOTES
E 1.3:	WARNING LABELS
DS+	EQUIPMENT SPEC SHEET

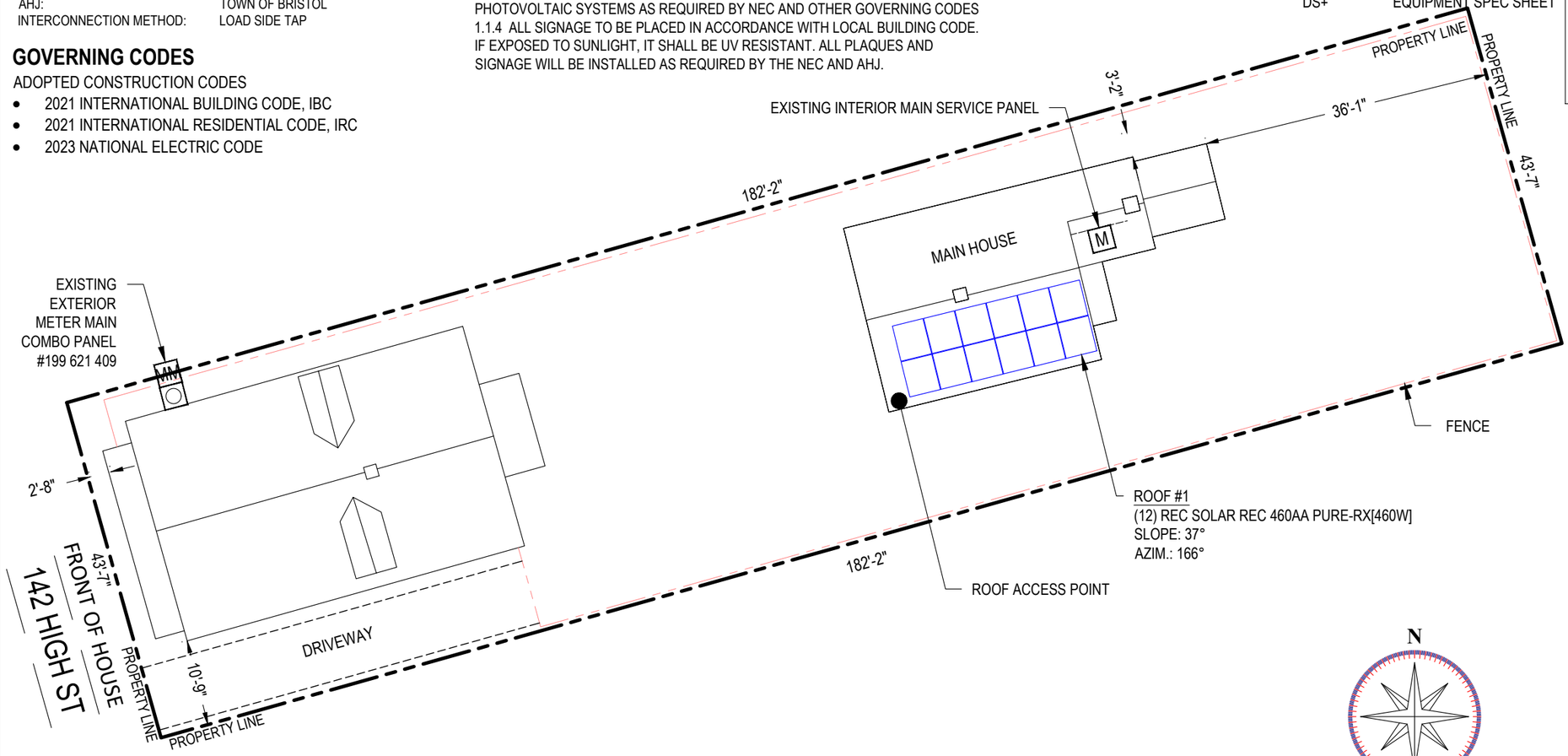

1 PV 0.0 PLOT PLAN
SCALE: 1/16" = 1'

SCOPE OF WORK

1.2.1 CONTRACTOR IS RESPONSIBLE FOR THE DESIGN AND SPECIFICATIONS OF THE GRID-TIED PHOTOVOLTAIC SYSTEM. THE CONTRACTOR WILL BE RESPONSIBLE FOR COLLECTION OF EXISTING ONSITE CONDITIONS TO DESIGN, SPECIFY, AND INSTALL THE ROOF-MOUNTED PHOTOVOLTAIC SYSTEM DETAILED IN THIS DOCUMENT

144

ROOF ACCESS POINT

ROOF ACCESS POINT SHALL NOT BE LOCATED IN AREAS THAT REQUIRE THE PLACEMENT OF GROUND LADDERS OVER OPENINGS SUCH AS WINDOWS OR DOORS, AND LOCATED AT STRONG POINTS OF BUILDING CONSTRUCTION IN LOCATIONS WHERE THE ACCESS POINT DOES NOT CONFLICT WITH OVERHEAD OBSTRUCTIONS SUCH AS TREE LIMBS, WIRES OR SIGNS.

SIGNATURE WITH SEAL

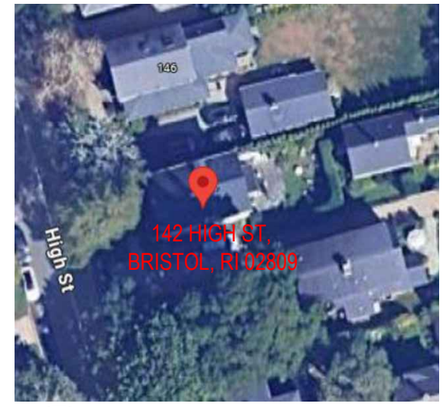

2 PV 0.0 SATELLITE VIEW
SCALE: NTS

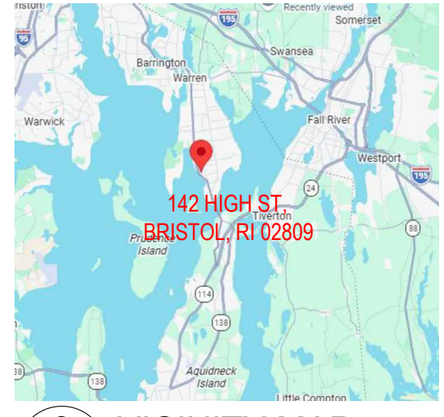

3 PV 0.0 VICINITY MAP
SCALE: NTS

NEC ELECTRIC + SOLAR
121 BROADCOMMON RD. BRISTOL, RI 02809,
PH#:(401) 644-5692
RI AC4585
MA A20803

REVISIONS

Description	Date	Rev
Revision	5/9/2026	01

Signature with Seal

Project Name & Address

CORNELIA MURPHY RESIDENCE
142 HIGH ST, BRISTOL, RI 02809
APN NO.: BRISM19L106

Sheet Name: COVER SHEET

Sheet Size: ANSI B 11" X 17"

Sheet Number: PV 0.0

Drawn Date: 4/29/2026

Drawn By: PremiumCAD

NEW PV SYSTEM SPECIFICATIONS:

SYSTEM SIZE:	
DC SIZE:	5.520 KW DC-(STC)
AC SIZE:	4.560 KW AC
MODULE TYPE & AMOUNT:	(12) REC SOLAR REC 460AA PURE-RX[460W]
MODULE DIMENSIONS:	(L/W/H) 68.03"/47.40"/1.18"
INVERTER:	(12) ENPHASE IQ8X-80-M-US [240V]
UTILITY NAME:	RI ENERGY
METER NUMBER:	199 621 409
AHJ:	TOWN OF BRISTOL
INTERCONNECTION METHOD:	LOAD SIDE TAP

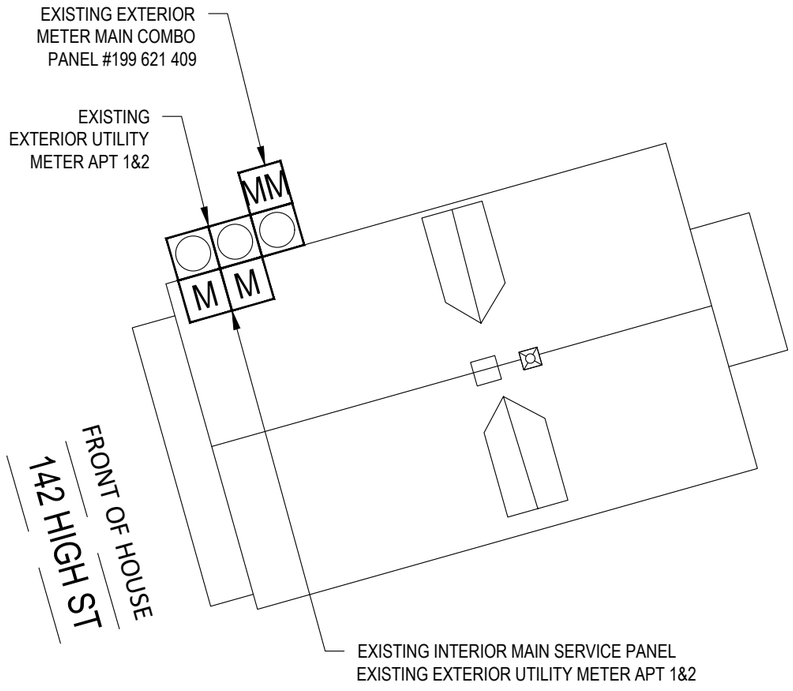

1 PV 1.0 **SITE PLAN**

SCALE: 5/64" = 1'-0"

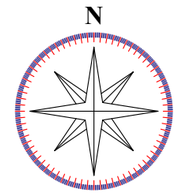

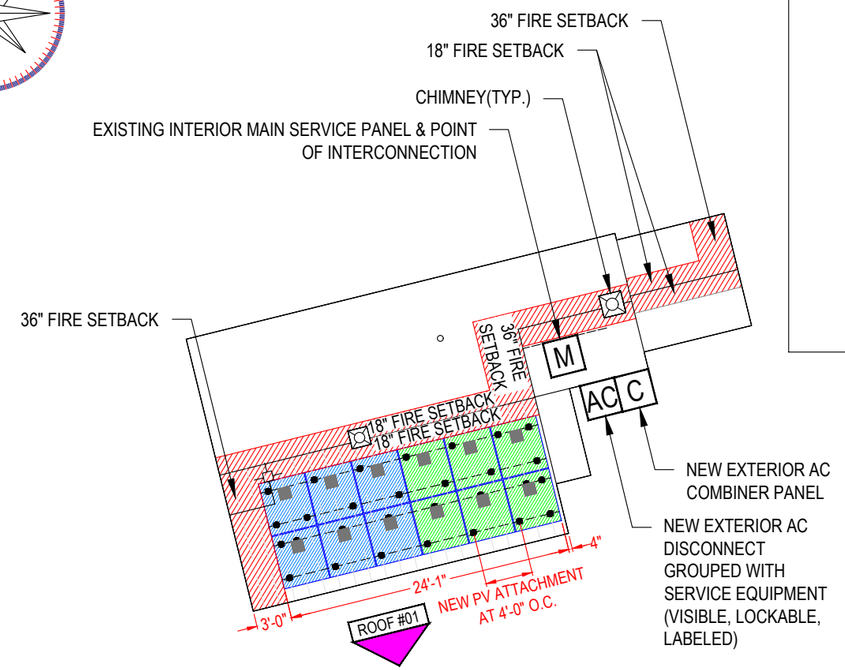

BILL OF MATERIALS

NUMBER OF MODULES	12	REC SOLAR REC 460AA PURE-RX[460W]
NUMBER OF MICROINVERTER	12	ENPHASE IQ8X-80-M-US [240V]
COMBINER PANEL	01	125A ENPHASE IQ COMBINER 5/5C X-IQ-AM1-240-5/5C, 240V
AC DISCONNECT	1	60A FUSIBLE AC DISCONNECT, WITH 30A FUSES, 240V
NUMBER OF ATTACHMENTS	29	SNAPNRACK UMBRELLA L FOOT ATTACHMENT
RAILS	7	SNAPNRACK UR- 45 RAIL, 172", BLACK SECTION
RAIL SPLICE	4	SPLICE KIT
MID CLAMPS	20	MID CLAMPS / UFO
END CLAMPS	8	END CLAMPS / STOP SLEEVE
GROUNDING LUG	2	GROUNDING LUG

MODULE, ARRAY WEIGHT (LOAD CALC'S)

Number of Modules	12	
Module Weight	50.05	LBS
Total Module (Array) Weight	600.60	LBS
Number of Attachment point	29	
Mounting System Weight *(Per Module)*	1.5	LBS
Mounting System Weight	43.50	LBS
Total System Weight *(Module Weight + Mounting System Weight)*	644.10	LBS
Weight at Each Attachment Point *(Array Weight / Number of Attachment Point)*	20.71	LBS
Module Area (68.03"x47.40")	22.39	SqFt
Total Array Area	268.72	SqFt
Distributed Load *(Total System Weight / Total Array Area)*	2.30	Per SqFt
Total Roof Area	879	SqFt
Total Percentage or Roof Covered *Total Array Area / Total Roof Area)*100*	30.57%	

SIGNATURE WITH SEAL

SYSTEM LEGEND

- MM — METER MAIN PANEL
- M — MAIN SERVICE PANEL
- ○ — UTILITY METER
- AC — AC DISCONNECT
- C — COMBINER PANEL.
- 12 NEW REC SOLAR REC 460AA PURE-RX[460W] MODULES WITH NEW 12 - ENPHASE IQ8X-80-M-US [240V] INVERTERS, MOUNTED ON THE BACK OF EACH MODULES.
- = FIRE PATHWAY
- = ROOF OBSTRUCTIONS
- = ATTACHMENT POINTS
- = RAFTER
- = RACKING SYSTEM
- = EXTERIOR RUN
- = CONDUIT ROOF TOP JUNCTION BOX

ROOF SECTIONS

ROOF #01 — MODULE - 12
SLOPE - 37°
AZIMUTH - 166°
MATERIAL - ASPHALT SHINGLES
RAFTER SIZE & SPACING - 2"X8" @ 16" O.C.

CIRCUIT(S)

- CIRCUIT #1 - 06 MODULES
- CIRCUIT #2 - 06 MODULES

NEC ELECTRIC + SOLAR
121 BROADCOMMON RD. BRISTOL, RI 02809,
PH#:(401) 644-5692
RI AC4585
MA A20803

REVISIONS

Description	Date	Rev
Revision	5/9/2026	01

Signature with Seal

Project Name & Address

CORNELIA MURPHY RESIDENCE
142 HIGH ST,
BRISTOL, RI 02809
APN NO.: BRISM19L106

Sheet Name: SITE PLAN

Sheet Size: ANSI B 11" X 17"

Sheet Number: PV 1.0

Drawn Date: 4/29/2026

Drawn By: **PremiumCAD**

GENERAL STRUCTURAL NOTES:

1. THE SOLAR PANELS ARE TO BE MOUNTED TO THE ROOF FRAMING USING THE SNAPNRACK UR- 45 RAIL, 172", BLACK RACKING SYSTEM WITH SNAPNRACK UMBRELLA L FOOT ATTACHMENT. THE MOUNTING FEET ARE TO BE SPACED AS SHOWN IN THE DETAILS, AND MUST BE STAGGERED TO ADJACENT FRAMING MEMBERS TO SPREAD OUT THE ADDITIONAL LOAD.
2. UNLESS NOTED OTHERWISE, MOUNTING ANCHORS SHALL BE INSTALLED WITH PENETRATION INTO ROOF FRAMING AS SHOWN IN ATTACHMENT DETAIL (ENLARGED VIEW).
3. THE PROPOSED PV SYSTEM ADDS 2.30 PSF TO THE ROOF FRAMING SYSTEM.

DESIGN CRITERIA
ROOF SURFACE TYPE: ASPHALT SHINGLES
ROOF FRAMING: RAFTER 2"X8" @ 16" O.C.
GROUND SNOW LOAD: 30 PSF
WIND SPEED: 128 MPH
WIND EXPOSURE: B
RISK CATEGORY: II
ROOF LIVE LOAD: 20 PSF TYPICAL

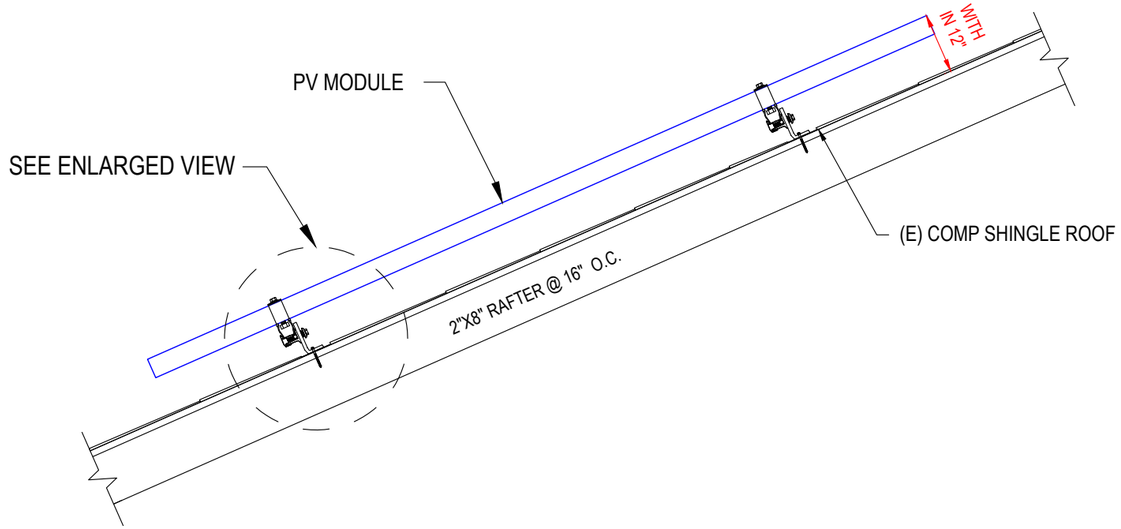

1 ATTACHMENT DETAIL (SIDE VIEW)

S 1.1

SCALE: NTS

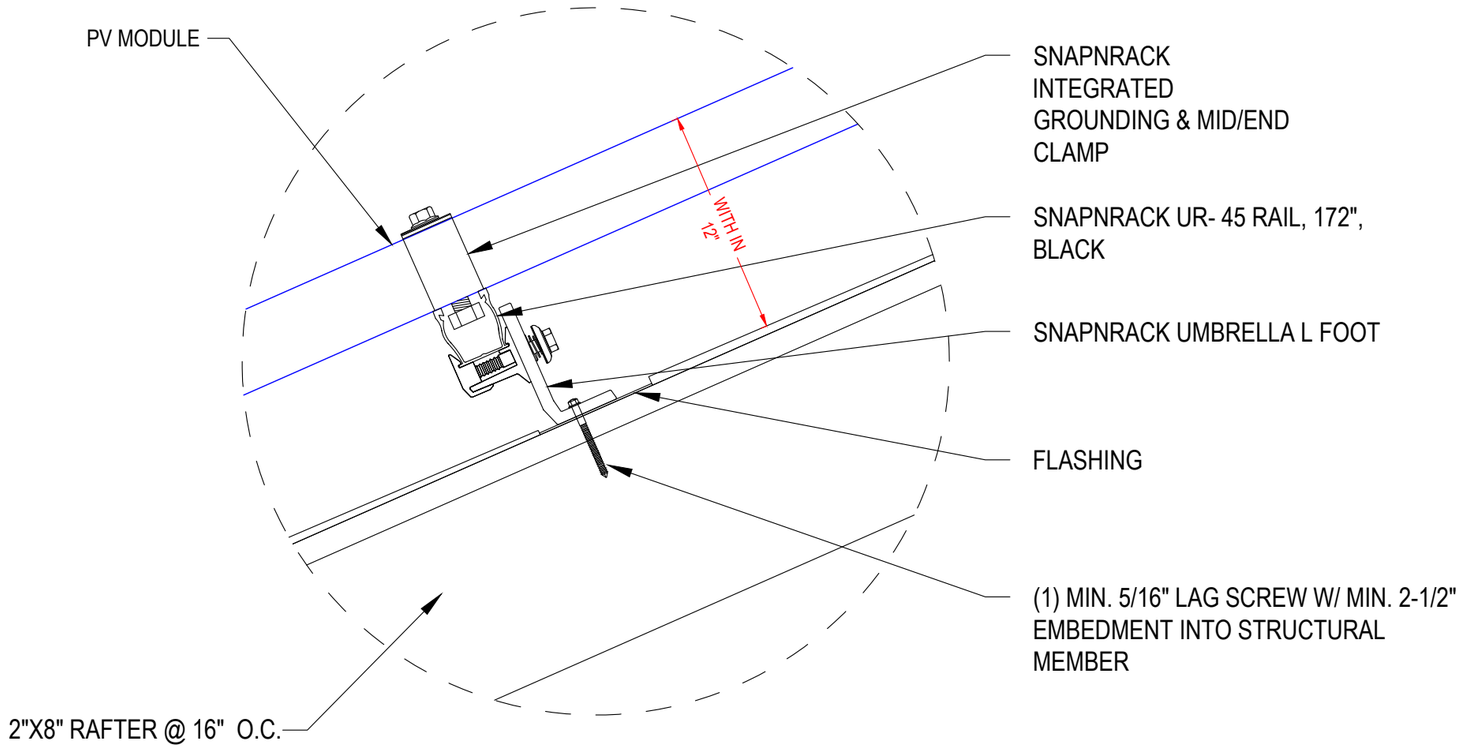

2 ATTACHMENT DETAIL (ENLARGED VIEW)

S 1.1

SCALE: NTS

SIGNATURE WITH SEAL

NEC ELECTRIC + SOLAR
121 BROADCOMMON RD. BRISTOL, RI 02809,
PH#:(401) 644-5692
RI AC4585
MA A20803

REVISIONS

Description	Date	Rev
Revision	5/9/2026	01

Signature with Seal

Project Name & Address

CORNELIA MURPHY RESIDENCE
142 HIGH ST,
BRISTOL, RI 02809
APN NO.: BRISM19L106

Sheet Name
MOUNT DETAILS

Sheet Size
ANSI B
11" X 17"

Sheet Number
S 1.1

Drawn Date
4/29/2026

Drawn By
PremiumCAD

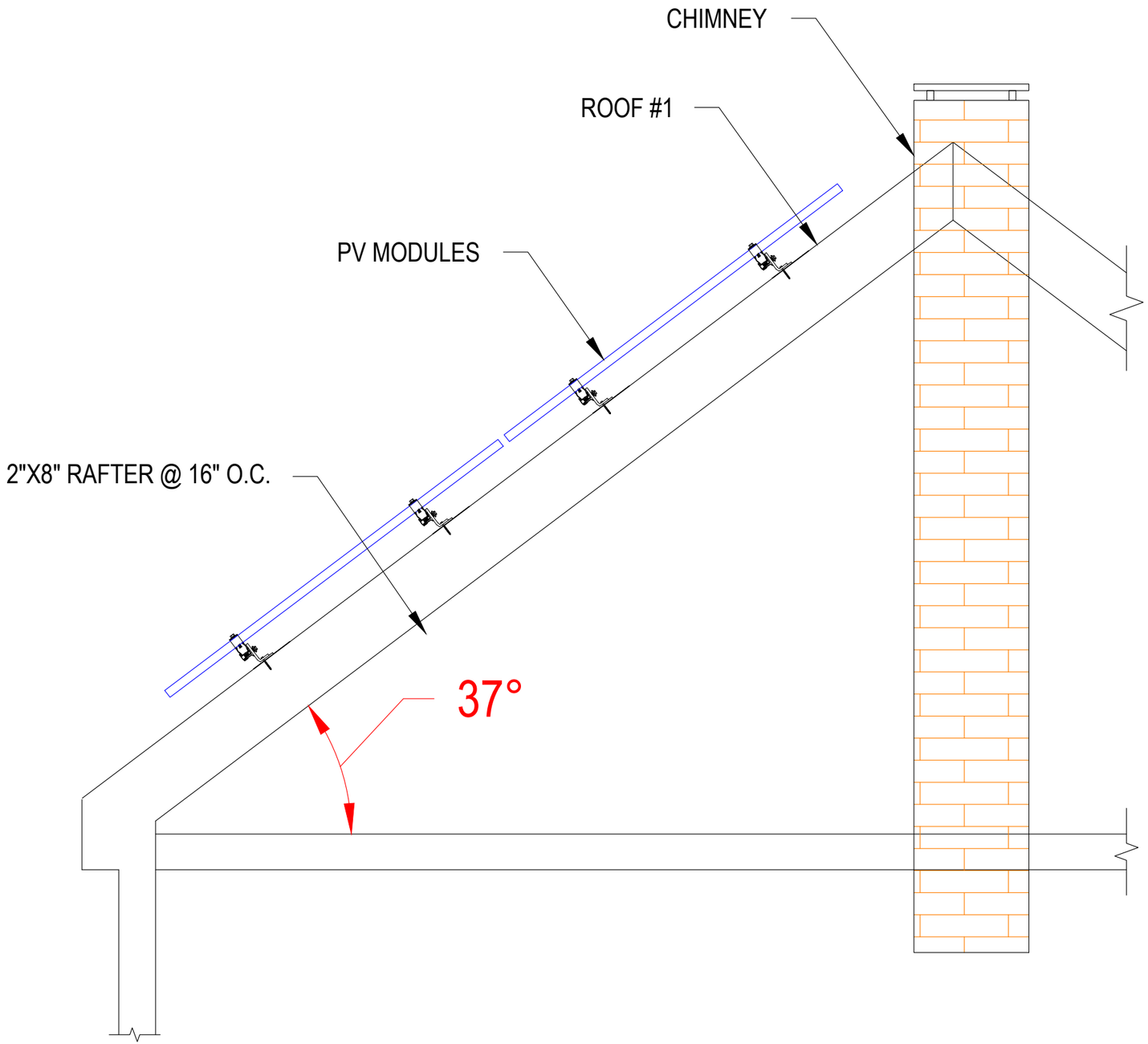

1 ROOF SECTION #ROOF1

S 1.2

SCALE: NTS

SIGNATURE WITH SEAL

NEC ELECTRIC + SOLAR
121 BROADCOMMON RD. BRISTOL, RI 02809,
PH#:(401) 644-5692
RI AC4585
MA A20803

REVISIONS

Description	Date	Rev
Revision	5/9/2026	01

Signature with Seal

Project Name & Address

CORNELIA MURPHY RESIDENCE
142 HIGH ST,
BRISTOL, RI 02809
APN NO.: BRISM19L 106

Sheet Name
ROOF SECTION

Sheet Size
ANSI B
11" X 17"

Sheet Number
S 1.2

Drawn Date
4/29/2026

Drawn By
PremiumCAD

Rooftop conductor ampacities designed in compliance with art. 690.8, Tables 310.15(B)(2)(a), 310.15(B)(3)(a), 310.15(B)(3)(c), 310.15(B)(16), Chapter 9 Table 4, 5, & 9. Location specific temperature obtained from ASHRAE 2017 data tables

RECORD LOW TEMP	-17°C
AMBIENT TEMP (HIGH TEMP 2%)	32°C
CONDUIT HEIGHT	0.5"
ROOF TOP TEMP	54°C
CONDUCTOR TEMPERATURE RATE	90°C

THIS PANEL IS FED BY MULTIPLE SOURCES (UTILITY AND SOLAR)	
AC OUTPUT CURRENT	18.96A
NOMINAL AC VOLTAGE	240V

PV MODULE RATING @ STC	
MANUFACTURER	REC SOLAR REC 460AA PURE-RX[460W]
MAX. POWER-POINT CURRENT (IMP)	8.38 AMPS
MAX. POWER-POINT VOLTAGE (VMP)	54.9 VOLTS
OPEN-CIRCUIT VOLTAGE (VOC)	65.7 VOLTS
SHORT-CIRCUIT CURRENT (ISC)	8.88 AMPS
NOM. MAX. POWER AT STC (PMAX)	460 WATT
MAX. SYSTEM VOLTAGE	1000V
VOC TEMPERATURE COEFFICIENT	-0.24 %/°C

PHOTOVOLTAIC SYSTEM SPECIFICATIONS:
SYSTEM SIZE: 5.520 kW DC
4.560 kW AC
MODULE TYPE & AMOUNT: (12) REC SOLAR REC 460AA PURE-RX[460W]
MICROINVERTER: (12) ENPHASE IQ8X-80-M-US [240V]

INVERTER SPECIFICATIONS	
MANUFACTURER	ENPHASE IQ8X-80-M-US [240V]
MAX. DC VOLT RATING	79.5 VOLTS
MAX. POWER AT 40 C	380WATTS
NOMINAL AC VOLTAGE	240 VOLTS
MAX. AC CURRENT	1.58 AMPS
MAX. MODULE ISC	13 AMPS
MAX. PANELS/CIRCUIT	10
SHORT CIRCUIT CURRENT	16 AMPS

ENPHASE Q CABLE TO BE ATTACHED TO RAIL MIN. 3-1/2" ABOVE ROOF SURFACE

SIGNATURE WITH SEAL

12 NEW REC SOLAR REC 460AA PURE-RX[460W] MODULES WITH (12) (ENPHASE IQ8X-80-M-US [240V]) MICROINVERTERS 240VAC, 1.58A MAX CEC WEIGHTED EFFICIENCY 97.2% NEMA 4R, UL LISTED, INTERNAL GFDI

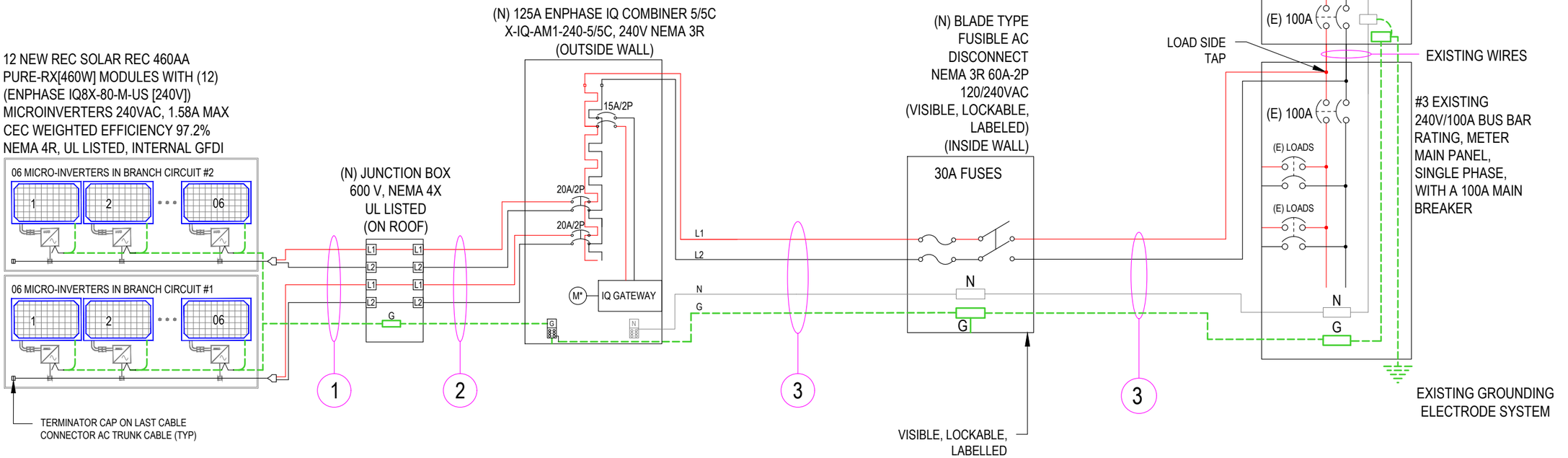

WIRE TAG #	WIRE FROM - -	CONDUIT	WIRE QTY	WIRE GAUGE:	WIRE RATING	TEMP RATING:	WIRE AMP	TEMP DE-RATE:	CONDUIT FILL:	WIRE OCP:	INVERTER QTY:	NOC:	NEC:	STRING AMPS	GRND SIZE	GRND WIRE TYPE
1	ARRAY TO JUNCTION BOX	TRUNK CABLE	4	#12	TRUNK CABLE	90°	30A x	0.96 x	N/A	= 28.80A	06	x 1.58A	x 1.25 =	11.85A	#6	SBC
2	JUNCTION BOX TO COMBINER PANEL	1" PVC SCH 80	4	#10	THWN-2	90°	40A x	0.76 x	0.80	= 24.32A	06	x 1.58A	x 1.25 =	11.85A	#10	THHN-2
3	COMBINER PANEL TO MSP	1" PVC SCH 80	3	#10	THWN-2	75°	148 x	0.94 x	1.00	= 32.90A	12	x 1.58A	x 1.25 =	23.70A	#10	THHN-2

NEC ELECTRIC + SOLAR
121 BROADCOMMON RD. BRISTOL, RI 02809,
PH#:(401) 644-5692
RI AC4585
MA A20803

REVISIONS

Description	Date	Rev
Revision	5/9/2026	01

Signature with Seal

Project Name & Address

CORNELIA MURPHY RESIDENCE
142 HIGH ST, BRISTOL, RI 02809
APN NO.: BRISM19L106

Sheet Name: 3-LINE DIAGRAM

Sheet Size: ANSI B 11" X 17"

Sheet Number: E 1.1

Drawn Date: 4/29/2026

Drawn By: PremiumCAD

GENERAL NOTES

SITE NOTES
2.1.1 A LADDER WILL BE IN PLACE FOR INSPECTION IN ACCORDANCE WITH OSHA REGULATIONS.
2.1.2 THE PV MODULES ARE CONSIDERED NON-COMBUSTIBLE AND THIS SYSTEM IS A UTILITY INTERACTIVE SYSTEM WITH NO STORAGE BATTERIES.
2.1.3 THE SOLAR PV INSTALLATION WILL NOT OBSTRUCT ANY PLUMBING, MECHANICAL, OR BUILDING ROOF VENTS.
2.1.4 PROPER ACCESS AND WORKING CLEARANCE AROUND EXISTING AND PROPOSED ELECTRICAL EQUIPMENT WILL BE PROVIDED IN ACCORDANCE WITH SECTION NEC 110
2.1.5 ROOF COVERINGS SHALL BE DESIGNED, INSTALLED, AND MAINTAINED IN ACCORDANCE WITH THIS CODE AND THE APPROVED MANUFACTURER'S INSTRUCTIONS SUCH THAT THE ROOF COVERING SERVES TO PROTECT THE BUILDING OR STRUCTURE.

EQUIPMENT LOCATIONS
2.2.1 ALL EQUIPMENT SHALL MEET MINIMUM WORKING CLEARANCES IN ACCORDANCE WITH NEC 110.26.
2.2.2 WIRING SYSTEMS INSTALLED IN DIRECT SUNLIGHT MUST BE RATED FOR EXPECTED OPERATING TEMPERATURE AS SPECIFIED BY 2020 NFPA 70 NATIONAL ELECTRICAL CODE.
2.2.3 JUNCTION AND PULL BOXES PERMITTED INSTALLED UNDER PV MODULES IN ACCORDANCE WITH NEC 690
2.2.4 ALL EQUIPMENT SHALL BE INSTALLED ACCESSIBLE TO QUALIFIED PERSONNEL IN ACCORDANCE WITH NEC APPLICABLE CODES.
2.2.5 ALL COMPONENTS ARE LISTED FOR THEIR PURPOSE AND RATED FOR OUTDOOR USAGE WHEN APPROPRIATE.

STRUCTURAL NOTES
2.3.1 RACKING SYSTEM & PV ARRAY WILL BE INSTALLED IN ACCORDANCE WITH THE CODE-COMPLIANT INSTALLATION MANUAL. TOP CLAMPS REQUIRE A DESIGNATED SPACE BETWEEN MODULES, AND RAILS MUST ALSO EXTEND A MINIMUM DISTANCE BEYOND EITHER EDGE OF THE ARRAY/SUBARRAY, IN ACCORDANCE WITH RAIL MANUFACTURER'S INSTALLATION PRACTICES.
2.3.2 JUNCTION BOX WILL BE INSTALLED PER MANUFACTURER'S SPECIFICATIONS. IF ROOF-PENETRATING TYPE, IT SHALL BE FLASHED & SEALED PER LOCAL REQUIREMENTS.
2.3.3 ROOFTOP PENETRATIONS FOR PV RACEWAY WILL BE COMPLETED AND SEALED W/ APPROVED CHEMICAL SEALANT PER CODE BY A LICENSED CONTRACTOR.
2.3.4 ALL PV RELATED ROOF ATTACHMENTS TO BE SPACED NO GREATER THAN THE SPAN DISTANCE SPECIFIED BY THE RACKING MANUFACTURER OR PROFESSIONAL ENGINEERING GUIDANCE.
2.3.5 WHEN POSSIBLE, ALL PV RELATED RACKING ATTACHMENTS WILL BE STAGGERED AMONGST THE ROOF FRAMING MEMBERS.

WIRING & CONDUIT NOTES
2.4.1 ALL CONDUIT AND WIRE WILL BE LISTED AND APPROVED FOR THEIR PURPOSE. CONDUIT AND WIRE SPECIFICATIONS ARE BASED ON MINIMUM CODE REQUIREMENTS AND ARE NOT MEANT TO LIMIT UP-SIZING.
2.4.2 CONDUCTORS SIZED IN ACCORDANCE WITH THE NEC
2.4.3 AC CONDUCTORS TO BE COLORED OR MARKED PER NEC
2.4.4 LISTED OR LABELED EQUIPMENT SHALL BE INSTALLED AND USED IN ACCORDANCE WITH ANY INSTRUCTIONS INCLUDED IN THE LISTING OR LABELING PER NEC

GROUNDING NOTES
2.5.1 GROUNDING SYSTEM COMPONENTS SHALL BE LISTED FOR THEIR PURPOSE, AND GROUNDING DEVICES EXPOSED TO THE ELEMENTS SHALL BE RATED FOR SUCH USE.
2.5.2 PV EQUIPMENT SHALL BE GROUNDED IN ACCORDANCE WITH NEC 690 AND NEC TABLE 250.122.
2.5.3 METAL PARTS OF MODULE FRAMES, MODULE RACKING, AND ENCLOSURES CONSIDERED GROUNDED IN ACCORDANCE WITH NEC 250.
2.5.4 EQUIPMENT GROUNDING CONDUCTORS SHALL BE SIZED IN ACCORDANCE WITH NEC 690 AND INVERTER MANUFACTURER'S INSTALLATION PRACTICES
2.5.5 EACH MODULE WILL BE GROUNDED AS SHOWN IN MANUFACTURER DOCUMENTATION AND APPROVED BY THE AHJ. 2.5.6 THE GROUNDING CONNECTION TO A MODULE SHALL BE ARRANGED SUCH THAT THE REMOVAL OF A MODULE DOES NOT INTERRUPT A GROUNDING CONDUCTOR TO ANOTHER MODULE.
2.5.7 GROUNDING AND BONDING CONDUCTORS, IF INSULATED, SHALL BE COLORED GREEN OR MARKED GREEN IF #4 AWG OR LARGER PER NEC 250
2.5.8 THE GROUNDING ELECTRODE SYSTEM COMPLIES WITH NEC 690 AND NEC 250. IF EXISTING SYSTEM IS INACCESSIBLE, OR INADEQUATE, A GROUNDING ELECTRODE SYSTEM PROVIDED IN ACCORDANCE WITH NEC 250, NEC 690 AND THE AHJ.
2.5.9 GROUND-FAULT DETECTION SHALL COMPLY WITH NEC 690 TO REDUCE FIRE HAZARDS

DISCONNECTION AND OVERCURRENT PROTECTION NOTES
2.6.1 DISCONNECTING SWITCHES SHALL BE WIRED SUCH THAT WHEN THE SWITCH IS OPENED THE CONDUCTORS REMAINING ENERGIZED ARE CONNECTED TO THE TERMINALS MARKED "LINE SIDE" (TYPICALLY THE UPPER TERMINALS).
2.6.2 DISCONNECTS TO BE ACCESSIBLE TO QUALIFIED UTILITY PERSONNEL, BE LOCKABLE, AND BE A VISIBLE-BREAK SWITCH
2.6.3 PV SYSTEM CIRCUITS INSTALLED ON OR IN HABITABLE BUILDINGS SHALL INCLUDE A RAPID SHUTDOWN FUNCTION TO REDUCE SHOCK HAZARD FOR EMERGENCY RESPONDERS IN ACCORDANCE WITH 690
2.6.4 ALL OCPD RATINGS AND TYPES SPECIFIED ACCORDING TO NEC 690 AND 240.
2.6.5 INVERTER ON-GRID BRANCHES SHALL BE CONNECTED TO A SINGLE BREAKER OR GROUPED FUSE DISCONNECT(S) IN ACCORDANCE WITH NEC 110.
2.6.6 IF REQUIRED BY THE AHJ, SYSTEM WILL INCLUDE ARC-FAULT CIRCUIT PROTECTION IN ACCORDANCE WITH NEC 690.11 AND UL1699B.

INTERCONNECTION NOTES
2.7.1 LOAD SIDE INTERCONNECTION SHALL BE IN ACCORDANCE WITH NEC 705.
2.7.2 THE SUM OF THE UTILITY OCPD AND INVERTER CONTINUOUS OUTPUT MAY NOT EXCEED 120 PERCENT OF BUSBAR RATING PER NEC 705.
2.7.3 THE SUM OF 125 PERCENT OF THE POWER SOURCE(S) OUTPUT CIRCUIT CURRENT AND THE RATING OF THE OVERCURRENT DEVICE PROTECTING THE BUSBAR SHALL NOT EXCEED 120 PERCENT OF THE AMPACITY OF THE BUSBAR, PV DEDICATED BACKFEED BREAKERS MUST BE LOCATED OPPOSITE END OF THE BUS FROM THE UTILITY SOURCE OCPD IN ACCORDANCE WITH NEC 705.
2.7.4 AT MULTIPLE ELECTRIC POWER SOURCES OUTPUT COMBINER PANEL, TOTAL RATING OF ALL OVERCURRENT PROTECTION DEVICES SHALL NOT EXCEED AMPACITY OF BUSBAR. HOWEVER, THE MAIN OVERCURRENT PROTECTION DEVICE MAY BE EXCLUDED IN ACCORDANCE WITH NEC 705.
2.7.5 FEEDER TAP INTERCONNECTION (LOAD SIDE) IN ACCORDANCE WITH NEC 705.
2.7.6 SUPPLY SIDE TAP INTERCONNECTION IN ACCORDANCE WITH TO NEC 705 WITH SERVICE ENTRANCE CONDUCTORS IN ACCORDANCE WITH NEC 230.
2.7.7 BACKFEEDING BREAKER FOR ELECTRIC POWER SOURCES OUTPUT IS EXEMPT FROM ADDITIONAL FASTENING PER NEC 705.

SIGNATURE WITH SEAL

NEC ELECTRIC + SOLAR
121 BROADCOMMON RD. BRISTOL, RI 02809,
PH#:(401) 644-5692
RI AC4585
MA A20803

REVISIONS

Description	Date	Rev
Revision	5/9/2026	01

Signature with Seal

Project Name & Address

CORNELIA MURPHY RESIDENCE
142 HIGH ST,
BRISTOL, RI 02809
APN NO.: BRISM19L106

Sheet Name
NOTES

Sheet Size
ANSI B
11" X 17"

Sheet Number
E 1.2

Drawn Date
4/29/2026

Drawn By
PremiumCAD

WARNING

ELECTRICAL SHOCK HAZARD

TERMINALS ON THE LINE AND LOAD SIDES MAY BE ENERGIZED IN THE OPEN POSITION

LABEL LOCATION: COMBINER PANEL, AC DISCONNECT, POINT OF INTERCONNECTION
PER CODE: NEC 705.20(7), NEC 690.13(B)

WARNING

TURN OFF PHOTOVOLTAIC AC DISCONNECT PRIOR TO WORKING INSIDE PANEL

LABEL LOCATION: COMBINER PANEL(S), MAIN SERVICE DISCONNECT
PER CODE: NEC 110.27(C), OSHA 1910.145(f)(7)

WARNING DUAL POWER SOURCE
SECOND SOURCE IS PHOTOVOLTAIC SYSTEM

LABEL LOCATION: MAIN SERVICE DISCONNECT, PRODUCTION/NET METER
PER CODE: NEC 690.59, 705.30(C)

WARNING

THIS EQUIPMENT FED BY MULTIPLE SOURCES:
TOTAL RATING OF ALL OVERCURRENT DEVICES EXCLUDING MAIN POWER SUPPLY SHALL NOT EXCEED AMPACITY OF BUSBAR

LABEL LOCATION: POINT OF INTERCONNECTION, COMBINER PANEL
PER CODE: NEC 705.12(B)(3)

PV SYSTEM

DISCONNECT

LABEL LOCATION: AC DISCONNECT
PER CODE: NEC 690.13(B)

WARNING

POWER SOURCE OUTPUT CONNECTION. DO NOT RELOCATE THIS OVERCURRENT DEVICE.

LABEL LOCATION: POINT OF INTERCONNECTION
PER CODE: NEC 705.12(B)(2)

MAIN PHOTOVOLTAIC SYSTEM DISCONNECT

LABEL LOCATION: MAIN SERVICE DISCONNECT, UTILITY METER
PER CODE: NEC 690.13(B)

SOLAR PV SYSTEM EQUIPPED WITH RAPID SHUTDOWN

TURN RAPID SHUTDOWN SWITCH TO THE "OFF" POSITION TO SHUT DOWN PV SYSTEM AND REDUCE SHOCK HAZARD IN THE ARRAY



LABEL LOCATION: MAIN SERVICE DISCONNECT
PER CODE: NEC 690.12(D)

RAPID SHUTDOWN SWITCH FOR SOLAR PV SYSTEM

LABEL LOCATION: RSD INITIATION DEVICE, AC DISCONNECT
PER CODE: NEC 690.12(D)(2)

CAUTION

PHOTOVOLTAIC SYSTEM CIRCUIT IS BACKFED

LABEL LOCATION: MAIN SERVICE DISCONNECT
PER CODE: NEC 705.30(D), NEC 690.59

DO NOT DISCONNECT UNDER LOAD

LABEL LOCATION: MAIN SERVICE DISCONNECT
PER CODE: NEC 690.15(B) & NEC 690.33(D)(2)

SOLAR PV DC CIRCUIT

LABEL LOCATION: DC CONDUIT, DC JUNCTION BOX
PER CODE: NEC 690.31(D)(2)

PHOTOVOLTAIC POWER SOURCE

LABEL LOCATION: DC CONDUIT, DC JUNCTION BOX
PER CODE: NEC 690.31(D)(2)

NEC ELECTRIC + SOLAR
(401) 644-5692
FOR IMMEDIATE ASSISTANCE CALL 911

LABEL LOCATION: POINT OF INTERCONNECTION
PER CODE: NEC 705.10

SIGNATURE WITH SEAL

VISIBLE, LOCKABLE, LABELED DISCONNECT
LOCATED WITHIN 10' OF UTILITY METER

CAUTION:

POWER TO THIS BUILDING IS ALSO SUPPLIED FROM THE FOLLOWING SOURCES WITH DISCONNECT(S) LOCATED AS SHOWN.
DANGEROUS VOLTAGE MAY BE PRESENT AT ALL TIMES

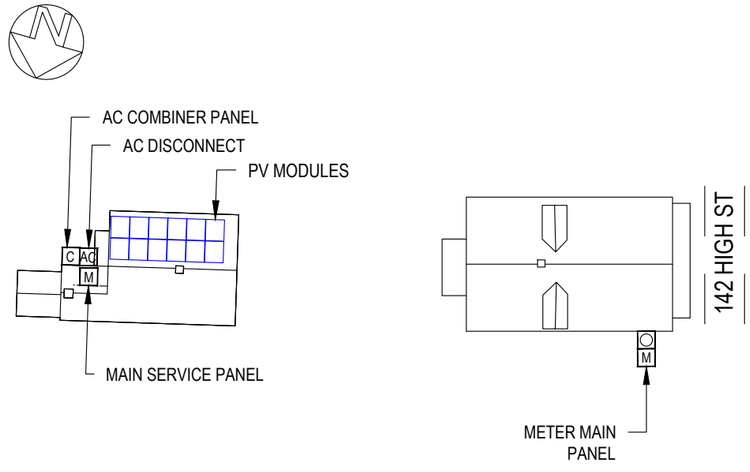

NEC ELECTRIC + SOLAR
121 BROADCOMMON RD. BRISTOL, RI 02809,
PH#:(401) 644-5692
RI AC4585
MA A20803

REVISIONS

Description	Date	Rev
Revision	5/9/2026	01

Signature with Seal

Project Name & Address

CORNELIA MURPHY RESIDENCE
142 HIGH ST,
BRISTOL, RI 02809
APN NO.: BRISM19L106

Sheet Name
WARNING LABELS

Sheet Size
ANSI B
11" X 17"

Sheet Number
E 1.3

Drawn Date
4/29/2026

Drawn By
PremiumCAD



REC ALPHA® PURE-RX
DATASHEET

REC SOLAR'S MOST TRUSTED — 2026 CELEBRATING 30 YEARS OF EXCELLENCE

GENERAL DATA

Cell Type	88 half-cut bifacial REC heterojunction cells, with gapless technology
Glass	3.2 mm solar glass with anti-reflective surface treatment in accordance with EN12150
Backsheet	Highly resistant polymer (Black)
Frame	Anodized aluminum (Black)
Junction Box	4-part, 4 bypass diodes, IP68 rated, in accordance with IEC 62790:2020
Connectors	Stäubli MC4 PV-KBT4/KST4 (4 mm²) in accordance with IEC 62852:2014, IP68 only when connected
Cable	4 mm² solar cable, 1.50 m + 1.50 m in accordance with EN50618:2014
Dimensions	1728 x 1205 x 30 mm (2.08 m²)
Weight	22.7 kg
Origin	Made in Singapore

Measurements in mm [in]

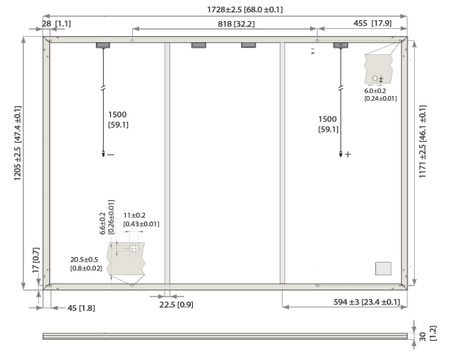

Specifications subject to change without notice.

ELECTRICAL DATA

		PRODUCT CODE*: RECxxxAA Pure-RX	
STC			
Power Output - P_{MAX} (W_p)	450	460	470
Watt Class Sorting - (W)	0/+10	0/+10	0/+10
Nominal Power Voltage - V_{MPP} (V)	54.3	54.9	55.4
Nominal Power Current - I_{MPP} (A)	8.29	8.38	8.49
Open Circuit Voltage - V_{OC} (V)	65.6	65.7	65.7
Short Circuit Current - I_{SC} (A)	8.81	8.88	8.95
Power Density (W/m²)	216	221	226
Panel Efficiency (%)	21.6	22.1	22.6
NMOT			
Power Output - P_{MAX} (W_p)	342	350	358
Nominal Power Voltage - V_{MPP} (V)	51.2	51.7	52.2
Nominal Power Current - I_{MPP} (A)	6.70	6.77	6.86
Open Circuit Voltage - V_{OC} (V)	61.8	61.9	61.9
Short Circuit Current - I_{SC} (A)	7.12	7.18	7.23

Values at standard test conditions (STC: air mass AM 1.5, irradiance 1000 W/m², temperature 25°C), based on a production spread with a tolerance of P_{MAX}, V_{OC} & I_{SC} ±3% within one watt class. Nominal module operating temperature (NMOT: air mass AM 1.5, irradiance 800 W/m², temperature 20°C, windspeed 1 m/s). *Where xxx indicates the nominal power class (P_{MAX}) at STC above.

TEMPERATURE COEFFICIENTS*

P_{MAX}	-0.24%/°C	V_{OC}	-0.24%/°C	I_{SC} 0.04%/°C

*The temperature coefficients stated are linear values

MODULE RATINGS

Module Operating Temperature [T98]§§	80°C
Min Environmental Temperature	-40°C
Nominal Module Operating Temperature	44 ± 2°C
Max Hail Rating¤	45 mm @ 30.7 m/s
System Voltage	1000 V
Max Series Fuse Rating	25 A
Max Reverse Current	25 A

§§ 98th percentile operating temperature
¤Based on third party testing

MAXIMUM TEST LOAD*

Front (4-Point)*	+7000 Pa (714 Kg/m²)
Rear (4-Point)*	-4000 Pa (408 Kg/m²)
Front (6-Point)**	+10000 Pa (1,020 Kg/m²)
Rear (6-Point)**	-6000 Pa (612 Kg/m²)

Design load = Test load / 1.5 (safety factor)

*IEC61730/UL61730 certified. Refer to installation manual.
**Internal testing. Refer to installation manual.

CERTIFICATIONS

ISO 14001; ISO9001; IEC45001; IEC62941	
IEC 61215:2021;IEC 61730:2023;UL 61730	
IEC 61730	Fire Class C
ISO 11925-2	Ignitability (EN 13501-1 Class E)
IEC 62716	Ammonia Resistance
IEC 61701	Salt Mist (SM6)
IEC 61215:2021	Hailstone (35 mm)
UL 61730	Fire Type 2
IEC TS 63126	Level 1

Take-e-way WEEE-compliant scheme

WARRANTY

	Standard	REC ProTrust	
Installed by an REC Certified Professional	No	Yes	Yes
System Size	All	<25 kW	25-500 kW
Product Warranty (yrs)	20	25	25
Power Warranty (yrs)	25	25	25
Labor Warranty (yrs)	0	25	10
Power in Year 1	98%	98%	98%
Annual Degradation	0.25%	0.25%	0.25%
Power in Year 25	92%	92%	92%

REC ProTrust Warranty applies only for i) REC panels installed by an REC Certified Solar Professional, and ii) panels have been registered by the installer with REC. Subject to System Size and further conditions. See www.recgroup.com for details.

DELIVERY INFORMATION

Panels per Pallet	33
Panels per 40 ft GP/high cube container	594 (18 Pallets)
Panels per 13.6 m truck	660 (20 Pallets)

LOW LIGHT BEHAVIOUR

Typical low irradiance performance of module at STC:

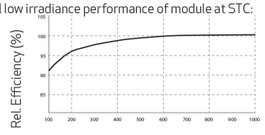

Available from:

Founded in 1996, REC Group is an international pioneering solar energy company dedicated to empowering consumers with clean, affordable solar power. As Solar's Most Trusted, REC is committed to high quality, innovation, and a low carbon footprint in the solar materials and solar panels it manufactures. Headquartered in Norway with operational headquarters in Singapore, REC also has regional hubs in North America, Europe, and Asia-Pacific.

REC Solar PTE. LTD.
20 Tuas South Ave. 14
Singapore 637312
post@recgroup.com
www.recgroup.com

IEC EN 10.2025 V5 REF-PM-DS-12-06/06.04.06.01

ENPHASE.

PRELIMINARY DATA SHEET



IQ8X Microinverter

Our newest IQ8 Series Microinverters are the industry's first microgrid-forming*, software-defined microinverters with split-phase power conversion capability to convert DC power to AC power efficiently. IQ8X Microinverter is the latest addition to this family, designed to support PV modules with higher input DC voltage and cell counts, such as 96 cells, 80 half-cut cells, and 88 half-cut cells. The brain of the semiconductor-based microinverter is our proprietary application-specific integrated circuit (ASIC), which enables the microinverter to operate in grid-tied or off-grid modes. This chip is built in advanced 55 nm technology with high-speed digital logic and has superfast response times to changing loads and grid events, alleviating constraints on battery sizing for home energy systems.



Part of the Enphase Energy System, IQ8 Series Microinverters integrate with the IQ Battery, IQ Gateway, and the Enphase App monitoring and analysis software.

Enphase 25 year limited warranty

IQ8 Series Microinverters redefine reliability standards with more than one million cumulative hours of power-on testing, enabling an industry-leading limited warranty of up to 25 years.

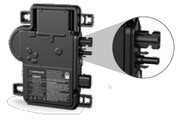

Connect PV modules quickly and easily to the IQ8 Series Microinverters that have integrated MC4 connectors.

UL CERTIFIED SAFETY

IQ8 Series Microinverters are UL listed as PV rapid shutdown equipment and conform with various regulations when installed according to the manufacturer's instructions.

*Only when installed with IQ System Controller 2, meets UL 1741.

Easy to install

- Lightweight and compact with plug-and-play connectors
- Power line communication (PLC) between components
- Faster installation with simple two-wire cabling

High productivity and reliability

- Produces power even when the grid is down*
- More than one million cumulative hours of testing
- Class II double-insulated enclosure
- Optimized for the latest high-powered PV modules

Microgrid-forming

- Complies with the latest advanced grid support
- Remote automatic updates for the latest grid requirements
- Configurable to support a wide range of grid profiles
- Meets CA Rule 21 (UL 1741-SA) and IEEE 1547:2018 (UL 1741-SB)

Note:

IQ8 Series Microinverters cannot be mixed together with previous generations of Enphase microinverters (IQ7 Series, IQ6 Series, and so on) in the same system.

© 2023 Enphase Energy. All rights reserved. Enphase, the e and CC logos, IQ, and certain other marks listed at https://enphase.com/trademark-usage-guidelines are trademarks of Enphase Energy, Inc. in the US and other countries. Data subject to change.

IQ8X Microinverter

INPUT DATA (DC)		IQ8X-80-M-US
Commonly used module pairings [1]	W	320–540
Module compatibility		To meet compatibility, PV modules must be within Max. Input DC voltage and Max module I_{sc} listed below Module compatibility can be checked at https://enphase.com/installers/microinverters/calculator
MPPT voltage range	V	43-60
Operating range	V	25-79.5
Minimum and Maximum start voltage	V	30-79.5
Max. input DC voltage	V	79.5
Max. continuous operating DC current	A	10
Max. input DC short-circuit current	A	16
Max. module I_{sc}	A	13
Overvoltage class DC port		II
DC port backfeed current	mA	0
PV array configuration		Ungrounded array; no additional DC side protection required; AC side protection requires max 20 A per branch circuit

OUTPUT DATA (AC)		IQ8X-80-M-US @240 VAC	IQ8X-80-M-US @208 VAC
Peak output power	VA	384	366
Max. continuous output power	VA	380	360
Nominal grid voltage (L-L)	V	240, split-phase (L-L), 180°	208, single-phase (L-L), 120°
Minimum and Maximum grid voltage [2]	V	211-264	183-229
Max. continuous output current	A	1.58	1.73
Nominal frequency	Hz	60	
Extended frequency range	Hz	47-68	
AC short circuit fault current over three cycles	Arms	2.70	
Max. units per 20 A (L-L) branch circuit [3]		10	9
Total harmonic distortion	%	< 5	
Overvoltage class AC port		III	
AC port backfeed current	mA	18	
Power factor setting		1.0	
Grid-tied power factor (adjustable)		0.85 leading...0.85 lagging	
Peak efficiency	%	97.6	97.4
CEC weighted efficiency	%	97.2	96.9
Nighttime power consumption	mW	22	29

MECHANICAL DATA	
Ambient temperature range	-40°C to 65°C (-40°F to 149°F)
Relative humidity range	4% to 100% (condensing)
DC connector type	Stäubli MC4
Dimensions (H × W × D); Weight	212 mm (8.3") × 175 mm (6.9") × 30.2 mm (1.2"); 1.1 kg (2.43 lbs)
Cooling	Natural convection – no fans
Approved for wet locations; Pollution degree	Yes; PD3
Enclosure	Class II double-insulated, corrosion-resistant polymeric enclosure
Environ. category; UV exposure rating	NEMA Type 6; outdoor

COMPLIANCE	
Certifications	CA Rule 21 (UL 1741-SA), UL 62109-1, IEEE 1547:2018 (UL 1741-SB), FCC Part 15 Class B, ICES-0003 Class B, CAN/CSA-C22.2 NO. 107.1-01 This product is UL Listed as PV rapid shutdown equipment and conforms with NEC 2014, NEC 2017, and NEC 2020 section 690.12 and C22.1-2018 Rule 64-218 rapid shutdown of PV systems for AC and DC conductors when installed according to the manufacturer's instructions.

(1) No enforced DC/AC ratio.
(2) Nominal voltage range can be extended beyond nominal if required by the utility.
(3) Limits may vary. Refer to local requirements to define the number of microinverters per branch in your area.

IQ8X-MC4-DSH-00185-1.0-EN-US-2023-08-21

ENPHASE.

DATA SHEET



X-IQ-AM1-240-5
X-IQ-AM1-240-5C

IQ Combiner 5/5C

The IQ Combiner 5/5C consolidates interconnection equipment into a single enclosure and streamlines IQ Series Microinverters and IQ Gateway installation by providing a consistent, pre-wired solution for residential applications. IQ Combiner 5/5C uses wired control communication and is compatible with IQ System Controller 3/3G and IQ Battery 5P.

The IQ Combiner 5/5C, IQ Series Microinverters, IQ System Controller 3/3G, and IQ Battery 5P provide a complete grid-agnostic Enphase Energy System.



IQ Series Microinverters
The high-powered smart grid-ready IQ Series Microinverters (IQ6, IQ7, and IQ8 Series) simplify the installation process.



IQ System Controller 3/3G
Provides microgrid interconnection device (MID) functionality by automatically detecting grid failures and seamlessly transitioning the home energy system from grid power to backup power.



IQ Battery 5P
Fully integrated AC battery system. Includes six field-replaceable IQ8D-BAT Microinverters.



IQ Load Controller
Helps prioritize essential appliances during a grid outage to optimize energy consumption and prolong battery life.

Enphase 5 year limited warranty

5-year limited warranty

c UL us LISTED

NOM

Smart

- Includes IQ Gateway for communication and control
- Includes Enphase Mobile Connect (CELLMODEM-M1-06-SP-05), only with IQ Combiner 5C
- Supports flexible networking: Wi-Fi, Ethernet, or cellular
- Provides production metering (revenue grade) and consumption monitoring

Easy to install

- Mounts to one stud with centered brackets
- Supports bottom, back, and side conduit entries
- Supports up to four 2-pole branch circuits for 240 VAC plug-in breakers (not included)
- 80 A total PV branch circuits
- Bluetooth-based Wi-Fi provisioning for easy Wi-Fi setup

Reliable

- Durable NRTL-certified NEMA type 3R enclosure
- 5-year limited warranty
- 2-year labor reimbursement program coverage included for both the IQ Combiner SKUs*
- UL1741 Listed

*For country-specific warranty information, see the https://enphase.com/installers/resources/warranty page.

© 2024 Enphase Energy. All rights reserved. Enphase, the e and CC logos, IQ, and certain other marks listed at https://enphase.com/trademark-usage-guidelines are trademarks of Enphase Energy, Inc. in the U.S. and other countries. Data subject to change.

IQ Combiner 5/5C

MODEL NUMBER	
IQ Combiner 5 (X-IQ-AM1-240-5)	IQ Combiner 5 with IQ Gateway printed circuit board for integrated revenue-grade PV production metering (ANSIC12.20 ±0.5%), consumption monitoring (± 2.5%), and IQ Battery monitoring (±2.5%). Includes a silver solar shield to deflect heat.
IQ Combiner 5C (X-IQ-AM1-240-5C)	IQ Combiner 5C with IQ Gateway printed circuit board for integrated revenue-grade PV production metering (ANSI C12.20 ±0.5%), consumption monitoring (±2.5%) and IQ Battery monitoring (±2.5%). Includes Enphase Mobile Connect cellular modem (CELLMODEM-M1-06-SP-05)[1]. Includes a silver solar shield to deflect heat.
WHAT'S IN THE BOX	
IQ Gateway printed circuit board	IQ Gateway is the platform for total energy management for comprehensive, remote maintenance, and management of the Enphase Energy System
Busbar	80 A busbar with support for 1 × IQ Gateway breaker and 4 × 20 A breaker for installing IQ Series Microinverters and IQ Battery 5P
IQ Gateway breaker	Circuit breaker, 2-pole, 10 A/15 A
Production CT	Pre-wired revenue-grade solid-core CT, accurate up to ±0.5%
Consumption CT	Two consumption metering clamp CTs, shipped with the box, accurate up to ±2.5%
IQ Battery CT	One battery metering clamp CT, shipped with the box, accurate up to ±2.5%
CTRL board	Control board for wired communication with IQ System Controller 3/3G and the IQ Battery 5P
Enphase Mobile Connect (only with IQ Combiner 5C)	4G-based LTE-M1 cellular modem (CELLMODEM-M1-06-SP-05) with a 5-year T-Mobile data plan
Accessories kit	Spare control headers for the COMMS-KIT-02 board
ACCESSORIES AND REPLACEMENT PARTS (NOT INCLUDED, ORDER SEPARATELY)	
CELLMODEM-M1-06-SP-05	4G-based LTE-M1 cellular modem with a 5-year T-Mobile data plan
CELLMODEM-M1-06-AT-05	4G-based LTE-M1 cellular modem with a 5-year AT&T data plan
Circuit breakers (off-the-shelf)	Supports Eaton BR2XX, Siemens Q2XX and GE/ABB THQL21XX Series circuit breakers (XX represents 10, 15, 20, 30, 40, 50, or 60). Also supports Eaton BR220B, BR230B, and BR240B circuit breakers compatible with the hold-down kit.
Circuit breakers (provided by Enphase)	BRK-10A-2-240V, BRK-15A-2-240V, BRK-20A-2P-240V, BRK-15A-2P-240V-B, and BRK-20A-2P-240V-B (more details in the "Accessories" section)
XA-SOLARSHIELD-ES	Replacement solar shield for IQ Combiner 5/5C
XA-ENV2-PCBA-5	IQ Gateway replacement printed circuit board (PCB) for IQ Combiner 5/5C
X-IQ-NA-HD-125A	Hold-down kit compatible with Eaton BR-B Series circuit breakers (with screws)
XA-COMMS2-PCBA-5	Replacement COMMS-KIT-02 printed circuit board (PCB) for IQ Combiner 5/5C
ELECTRICAL SPECIFICATIONS	
Rating	80 A
System voltage and frequency	120/240 VAC, 60 Hz
Busbar rating	125 A
Fault current rating	10 kAIC
Maximum continuous current rating (input from PV/storage)	64 A
Branch circuits (solar and/or storage)	Up to four 2-pole Eaton BR, Siemens Q, or GE/ABB THQL Series distributed generation (DG) breakers only (not included)
Maximum total branch circuit breaker rating (input)	80 A of distributed generation/95 A with IQ Gateway breaker included
IQ Gateway breaker	10 A or 15 A rating GE/Siemens/Eaton included
Production metering CT	200 A solid core pre-installed and wired to IQ Gateway
Consumption monitoring CT (CT-200-CLAMP)	A pair of 200 A clamp-style current transformers is included with the box
IQ Battery metering CT	200 A clamp-style current transformer for IQ Battery metering, included with the box

1. A plug-and-play industrial-grade cell modem for systems of up to 60 microinverters. Available in the United States, Canada, Mexico, Puerto Rico, and the US Virgin Islands, where there is adequate cellular service in the installation area.

IQC-5-5C-DSH-00007-3.0-EN-US-2024-03-01

CERTIFICATE OF COMPLIANCE

Certificate Number	20211109-E341165
Report Reference	E341165-20210317
Issue Date	2021-11-09

Issued to: Enphase Energy Inc.
1420 N. McDowell Blvd. Petaluma, CA 94954-6515

This is to certify that representative samples of Grid Support, Utility Interactive Supporting Energy Storage, Multimode, Bi-directional Microinverters

Models IQ8-60, IQ8PLUS-72, IQ8M-72, IQ8A-72, IQ8H-208-72, IQ8H-240-72, may be f/b -2, -5, -E, or -M, may be f/b -ACM, f/b -US, may be f/b -NM, may be f/b -RMA, may be f/b -&, where "&" designates additional characters.

Has been investigated by UL in accordance with the Standard(s) indicated on this Certificate.

Standard(s) for Safety: See Page 2

Additional Information: See the UL Online Certifications Directory at www.ul.com/database for additional information

This *Certificate of Compliance* is provided as a courtesy to help our customers communicate product compliance information, as documented in our UL Follow-Up Services procedure. This Certificate of Compliance does not provide authorization to apply the UL Mark. Only the UL Follow-Up Services Procedure provides authorization to apply the UL Mark.

Only those products bearing the UL Mark shall be considered as being UL Certified and covered under UL's Follow-Up Services. Look for the UL Certification Mark on the product.

Any information and documentation involving UL Mark services are provided on behalf of UL LLC (UL) or any authorized licensee of UL.

Bruce Mahrenholz, Director North American Certification Program

UL LLC

Any information and documentation involving UL Mark services are provided on behalf of UL LLC (UL) or any authorized licensee of UL. For questions, please contact a local UL Customer Service Representative at http://ul.com/aboutul/locations/

CERTIFICATE OF COMPLIANCE

Certificate Number	20211109-E341165
Report Reference	E341165-20210317
Issue Date	2021-11-09

This is to certify that representative samples of the product as specified on this certificate were tested according to the current UL requirements.

Standards for Safety:

UL 62109-1, STANDARD FOR SAFETY OF POWER CONVERTERS FOR USE IN PHOTOVOLTAIC POWER SYSTEMS - PART 1: GENERAL REQUIREMENTS, Edition 1, Revision Date 04/30/2019

IEC 62109-2, SAFETY OF POWER CONVERTERS FOR USE IN PHOTOVOLTAIC POWER SYSTEMS - PART 2: PARTICULAR REQUIREMENTS FOR INVERTERS, Edition 1, Issue Date 06/2011

UL 1741, Inverters, Converters, Controllers and Interconnection System Equipment for Use With Distributed Energy Resources, Edition 2, Revision Date 06/10/2021, including the requirements in UL 1741 Supplement SA, sections as noted in the Technical considerations.

IEEE 1547, IEEE Standard for Interconnecting Distributed Resources with Electric Power Systems.

IEEE 1547.1, IEEE Standard for Conformance Test Procedures for Equipment Interconnecting Distributed Resources with Electric Power Systems.

CSA C22.2 No. 62109-1, Safety of Power Converters for Use in Photovoltaic Power Systems - Part 1: General Requirements, Edition 1, Issue Date 07/2016

CSA C22.2 No. 62109-2, Safety of Power Converters for Use in Photovoltaic Power Systems - Part 2: Particular Requirements for Inverters, Edition 1, Issue Date 07/2016

Bruce Mahrenholz, Director North American Certification Program

UL LLC

Any information and documentation involving UL Mark services are provided on behalf of UL LLC (UL) or any authorized licensee of UL. For questions, please contact a local UL Customer Service Representative at http://ul.com/aboutul/locations/

DESCRIPTION: SNAPNRACK, TDS, UR-45 RAIL	DOC NUMBER: SNR-DC-01420	SnapNrack®
PART NUMBER(S): 232-10095, 232-10096, 232-10097, 232-10098,	DRAWN BY: H.WULFEKOETTER	SUNRUN INSTALLATION SERVICES INC.
UNITS: IN, LB, DEG [MM, KG, DEG] / SHEET: 1:1	REV: A / DATE: 3/6/2024	225 BUSH STREET, SUITE 1400 • SAN FRANCISCO, CA 94104 USA PHONE (877) 732-2860 • CONTACT@SNAPNRACK.COM

THE INFORMATION IN THIS DRAWING IS CONFIDENTIAL AND PROPRIETARY. ANY REPRODUCTION, DISCLOSURE, OR USE THEREOF IS PROHIBITED WITHOUT THE WRITTEN CONSENT OF SUNRUN SOUTH LLC.

UR-45 RAIL PROPERTIES

SKU	FINISH	RAIL LENGTH	WEIGHT (lb)
232-10095	MILL	172 in	5.55
232-10096	BLACK	172 in	5.55
232-10097	MILL	94 in	3.03
232-10098	BLACK	94 in	3.03

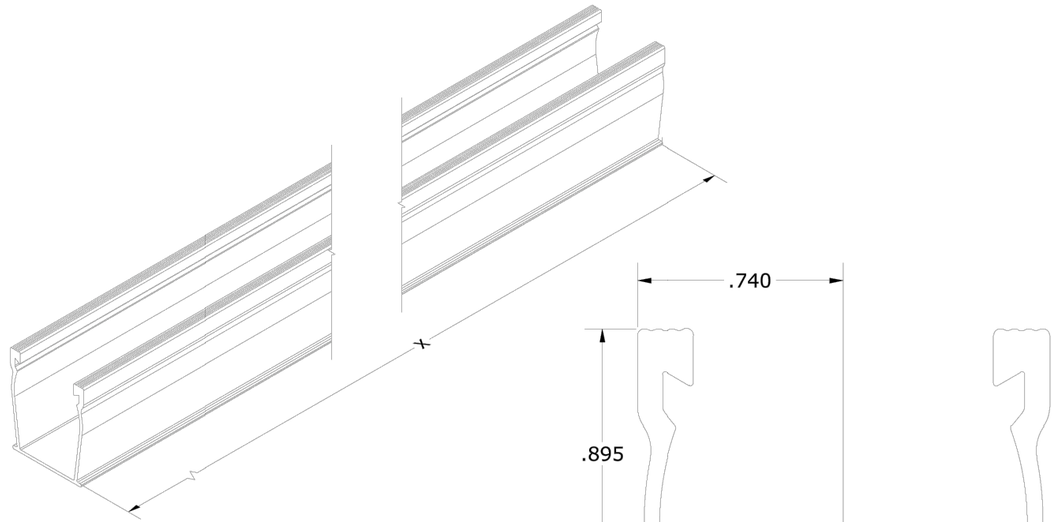

SECTION PROPERTIES

A	0.319 in²
Ixx	0.134 in⁴
Iyy	0.121 in⁴
Sx (TOP)	0.152 in³
Sx (BOT)	0.156 in³
Sy (LEFT)	0.164 in³
Sy (RIGHT)	0.164 in³

MATERIALS:	6005-T5 ALUMINUM
DESIGN LOAD (LBS):	N/A
ULTIMATE LOAD (LBS):	N/A
TORQUE SPECIFICATION:	N/A FT-LBS
CERTIFICATION:	UL 2703, FILE E359313
WEIGHT (LBS):	5.48 - 5.62 (172 i 6 - 3.10 (94 in)

SnapNrack™
Solar Mounting Solutions

snapnrack.com

Series 100 Flashed L Foot Kit

SnapNrack Series 100 Flashed L Foot Kit is an innovative solution to provide a long lasting, watertight seal over the life of the system. The Flashed L Foot provides a fully flashed roof fastener for attachment to composition roof with no required cutting of shingles. The L Foot is engineered for maximum adjustability for a clean, level installation.

- Slotted attachment provides 1” vertical adjustability for array leveling
- 1” spacers available for increased elevation adjustability
- Clear or black anodized aluminum components. Both are available with black galvanized steel or aluminum flashing.
- No cutting of shingles

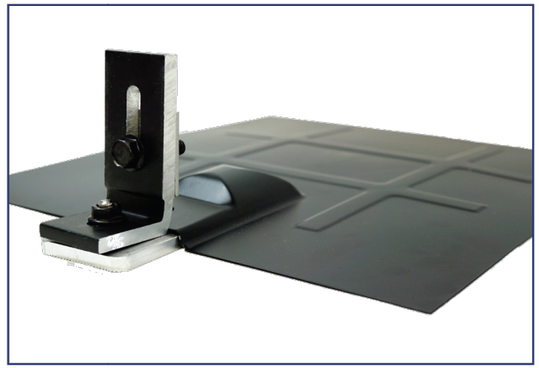

Flashed L Foot Kit Assembly

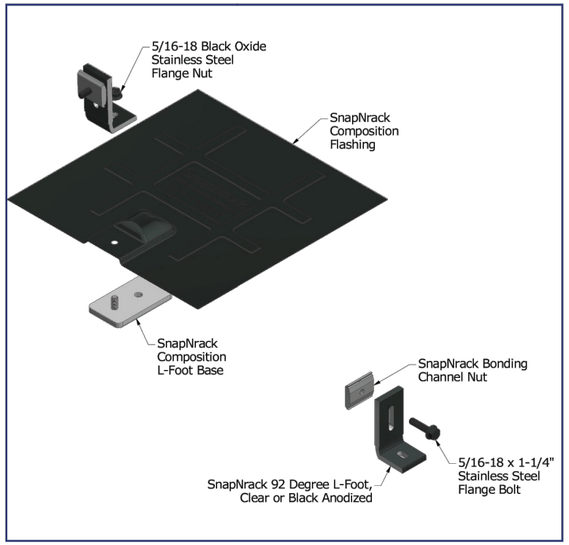

Flashed L Foot Kit Dimensions

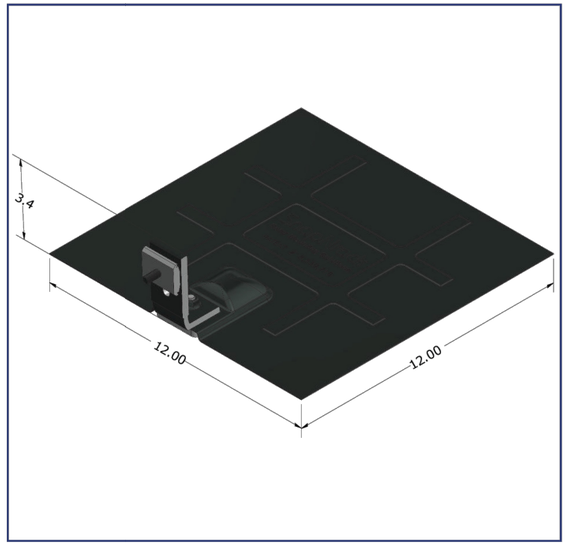

Features Include

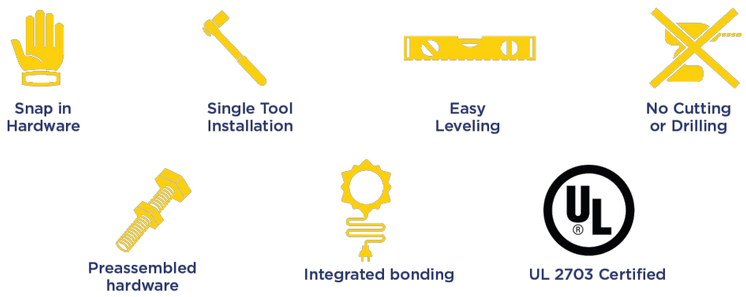

FLASHED L FOOT KIT TECHNICAL DATA	
Materials	• 6000 Series aluminum L foot & base • Stainless steel hardware • Galvanized steel or aluminum flashing w/ black all weather coating
Material Finish	Clear and black anodized aluminum
Weight	1.3 lbs
Design Uplift Load	350 lbs uplift
Design Ultimate Load	1,000 lbs uplift
Warranty	10 year limited product warranty; 5 year limited finish warranty

877-732-2860 | **www.snapnrack.com** | **contact@snapnrack.com**

© 2015 by SnapNrack Solar Mounting Solutions. All rights reserved

DESCRIPTION:	DOC NUMBER:	
SNAPNRACK, TDS, ULTRA RAIL COMP KIT	SNR-DC-01342	SnapNrack
PART NUMBER(S):	DRAWN BY:	
242-92266, 242-01219, 242-01220, 232-01375, 232-01376, 232-01377	H.WULFEKOETTER	SUNRUN INSTALLATION SERVICES INC.
UNITS: IN, LB, DEG [MM, KG, DEG] / SHEET: 1:2	REV: D / DATE: 1/20/2023	225 BUSH STREET, SUITE 1400 • SAN FRANCISCO, CA 94104 USA PHONE (877) 732-2860 • CONTACT@SNAPNRACK.COM

THE INFORMATION IN THIS DRAWING IS CONFIDENTIAL AND PROPRIETARY. ANY REPRODUCTION, DISCLOSURE, OR USE THEREOF IS PROHIBITED WITHOUT THE WRITTEN CONSENT OF SUNRUN SOUTH LLC.

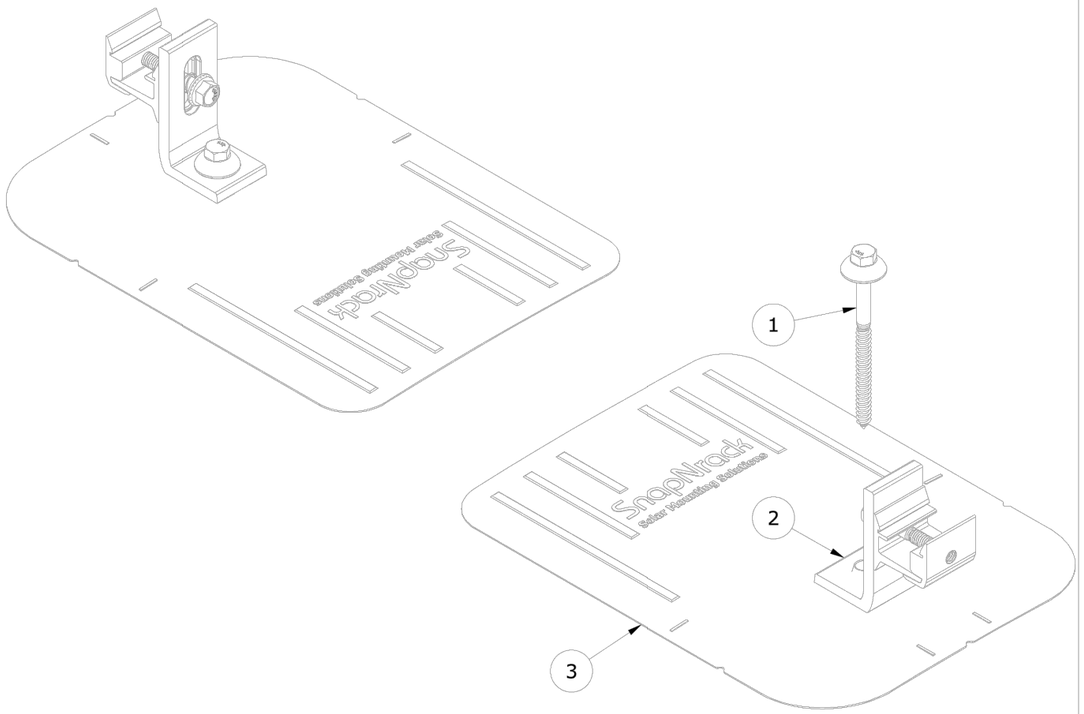

PARTS LIST			
ITEM	QTY	PART NUMBER	DESCRIPTION
1	1	242-92266	SNAPNRACK, UMBRELLA LAG, TYPE 3, 4IN, SS
2	1	242-01219, 242-01220	SNAPNRACK, ULTRA RAIL UMBRELLA L FOOT, SILVER / BLACK
3	1	232-01375, 232-01376, 232-01377	SNAPNRACK, COMP FLASHING, 9IN X 12IN, SILVER / BLACK

MATERIALS:	6000 SERIES ALUMINUM, STAINLESS STEEL, RUBBER
DESIGN LOAD (LBS):	802 UP, 1333 DOWN, 356 SIDE
ULTIMATE LOAD (LBS):	2005 UP, 4000 DOWN, 1070 SIDE
TORQUE SPECIFICATION:	12 FT-LBS
CERTIFICATION:	UL 2703, FILE E359313; WIND-DRIVEN RAIN TEST FROM UL SUBJECT 2582
WEIGHT (LBS):	0.93 -1.03

DESCRIPTION:	DOC NUMBER:	
SNAPNRACK, TDS, ULTRA RAIL COMP KIT	SNR-DC-01342	SnapNrack
PART NUMBER(S):	DRAWN BY:	
242-92266, 242-01219, 242-01220, 232-01375, 232-01376, 232-01377	H.WULFEKOETTER	SUNRUN INSTALLATION SERVICES INC.
UNITS: IN, LB, DEG [MM, KG, DEG] / SHEET: 2:2	REV: D / DATE: 1/20/2023	225 BUSH STREET, SUITE 1400 • SAN FRANCISCO, CA 94104 USA PHONE (877) 732-2860 • CONTACT@SNAPNRACK.COM

THE INFORMATION IN THIS DRAWING IS CONFIDENTIAL AND PROPRIETARY. ANY REPRODUCTION, DISCLOSURE, OR USE THEREOF IS PROHIBITED WITHOUT THE WRITTEN CONSENT OF SUNRUN SOUTH LLC.

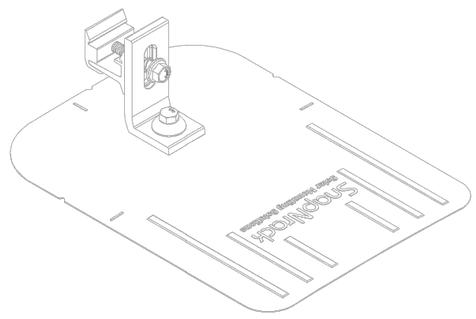

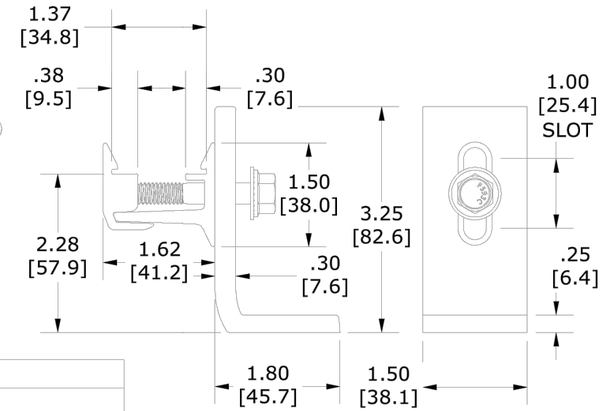

COMP FLASHING PROPERTIES	
SKU	DESCRIPTION
232-01375	COMP FLASHING, 9" X 12", BLACK ALUM
232-01376	COMP FLASHING, 9" X 12", SILVER ALUM
232-01377	COMP FLASHING, 9" X 12", BLACK GALVALUME

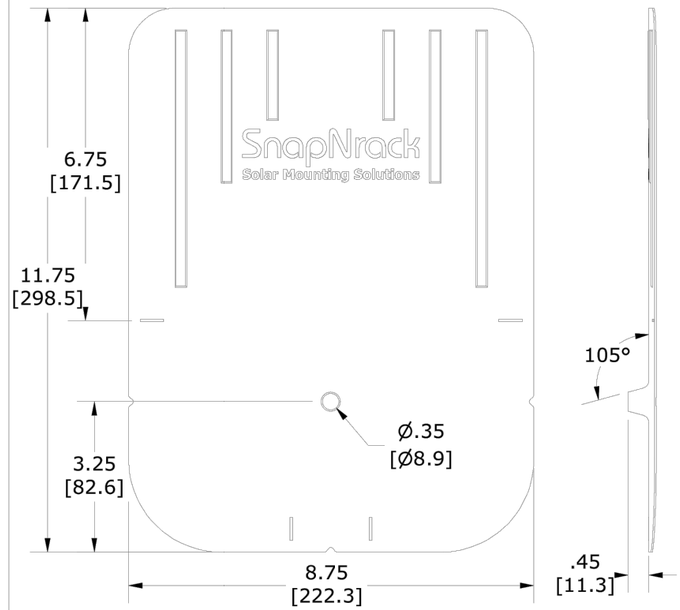

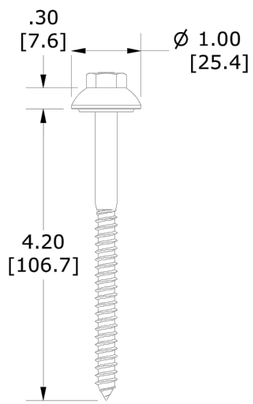

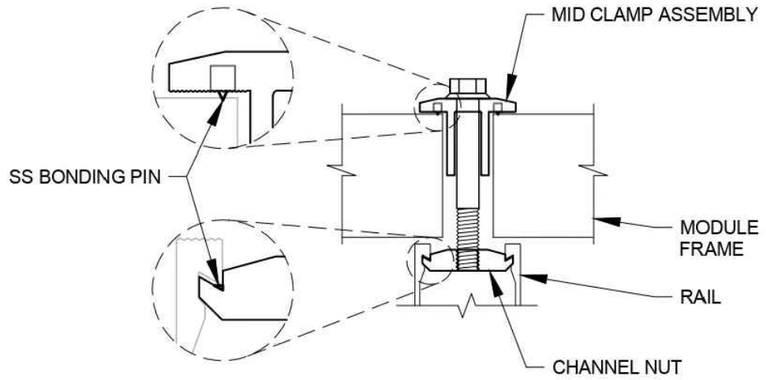

NOTE:
1. ADJUSTABLE END CLAMPS USE SAME BONDING PIN DESIGN TO BOND MODULES TO RAIL

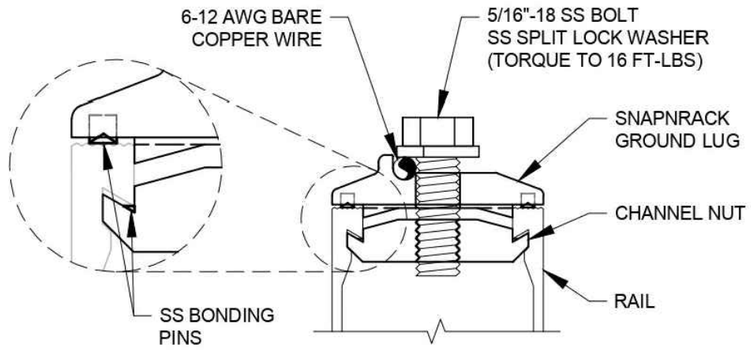

NOTE:
1. ALL HARDWARE IS INCLUDED FROM MANUFACTURER
2. A MINIMUM OF ONE GROUND LUG IS TO BE INSTALLED ON EVERY CONTINUOUS ROW OF MODULES
3. GROUND LUG MAY BE INSTALLED IN EITHER RAIL CHANNEL
4. GROUND LUG MAY BE INSTALLED SO GROUND WIRE IS PARALLEL OR PERPENDICULAR TO RAIL
5. ENSURE SPLIT LOCK WASHER IS INSTALLED ON TOP OF COPPER WIRE

ASSEMBLER:	
INSPECTOR:	
DESCRIPTION: SNAPNRACK MOUNTING SYSTEM GROUNDING DETAILS	DRAWN BY: MIKE WATKINS APPROVED BY: CODY NORMAN REVISION: G 1/11/2016 NEW ITEM
PART NUMBER:	SCALE: DNS

SnapNrack Solar Mounting Solutions

Sunrun South LLC
595 MARKET STREET, 29TH FLOOR • SAN FRANCISCO, CA 94105 USA
PHONE (415) 580-6900 • FAX (415) 580-6902

THE INFORMATION IN THIS DRAWING IS CONFIDENTIAL AND PROPRIETARY. ANY REPRODUCTION, DISCLOSURE, OR USE THEREOF IS PROHIBITED WITHOUT THE WRITTEN CONSENT OF SUNRUN SOUTH LLC.

SnapNrack UL 2703 Fire Classification

March 2019

As of January 1st, 2015 many jurisdictions are now enforcing codes based upon updates to the International Building Code (IBC) and UL Standards 1703 (modules) and 2703 (mounting systems). The language included in the 2012 IBC requires that the combination of roof mounted solar modules and racking components is to be considered a system (IBC Section 1509.7.2). Additionally, it requires that this system shall meet or exceed the fire classification of the roof assembly.



The objective is to ensure that the PV system does not adversely affect the fire rating of the roof. Roof surface fire ratings are classified either A, B, or C; Class A being the most resistant to the spread of flame.

Since the physical characteristics of the PV module (material, thickness of glass, etc) also potentially affect how a fire will act, modules are now tested and assigned a "type" based upon these characteristics and spread of flame test results. There are 15 total module types, Types 1, 2 and 3 represent differences in the module composition and Types 4 – 15 are the same module compositions as Types 1 – 3 with differing fire test performance.

SnapNrack Series 100, Ultra Rail and RL systems have been Certified for a Class A fire rating with Type 1 and Type 2 modules, in accordance with the standards set forth in UL1703/2703 and IBC 2012. In order to maintain this classification, the SnapNrack mounting systems must be installed per the UL-approved Installation Manuals. Because the test was conducted with the modules at 5 inches from the roof surface (worst case scenario), there is no restriction to the standoff height.

Attachment 1 is the SnapNrack QIMS File which is accessed through the UL Online Certification Directory, or available here: SnapNrack QIMS File.

Bristol Historic District Commission

Application for Review of Proposed Work - Printable Application

HDC-26-76		June 4, 2026

THIS DOCUMENT IS NOT A SUBSTITUTE FOR A BUILDING, ELECTRICAL, SIGN, MECHANICAL, DEMOLITION, SOLAR OR FENCE PERMIT APPLICATION. THESE PERMITS MUST BE APPLIED FOR AND APPROVED BY THE BRISTOL BUILDING DEPARTMENT BEFORE WORK CAN BEGIN.

Project Address	Assessor's Plat/Lot
250 METACOM AVE , BRISTOL, RI, 02809	136-0004-000

Applicant	Architect/Engineer	Contractor
Mount Hope Trust in Bristol	Todd Newman	FT Construction

Property Owner (If Different from Applicant)	Owner Mailing Address (If different than Project Address)
	PO Box 66

Work Category:	Replacing in Kind

Description of proposed work:

Replace existing wooden garage door with more appropriate wooden barn door on the historic barn. The door specs are:

1- 1371/2"w x 102"h Western Red Cedar Swing Door Pair, Richmond Design with Windows, to install in your finished opening including: Acorn Mfg RI8BP Strap Hinges, Center Astragal, Perimeter Stop, Sweep, Head and Foot Bolts
The current door is not at all representative of what a barn door in the 1800s would have looked like. The new door will provide simpler functionality and an overall improved aesthetic. The door we are hopoin to procure is called the Richmond and I am attaching an example of it.

Property History

Building Survey Data	
RIHPHC ID #:	
HISTORIC NAME:	
ARCH. STYLE:	
ORIGINAL CONSTRUCTION DATE (est.):	

ALTERATIONS TO MAJOR ARCH. SINCE 1978 (Height, Massing, Wall Covering, Trim, Windows. Porches)

Brenda A Turchetta
Applicant's Digital Signature
Date: June 4, 2026

CAI Property Card

Town of Bristol, RI

GENERAL PROPERTY INFORMATION

LOCATION: 250 METACOM AVE
ACRES: 60.8
PARCEL ID: 137-0007-000
LAND USE CODE: 73
CONDO COMPLEX:
OWNER: MOUNT HOPE TRUST IN BRISTOL
CO - OWNER:
MAILING ADDRESS: P. O. BOX 66

ZONING: R-40
PATRIOT ACCOUNT #: 7162

SALE INFORMATION

SALE DATE:
BOOK & PAGE:
SALE PRICE: 0
SALE DESCRIPTION:
SELLER:

PRINCIPAL BUILDING AREAS

GROSS BUILDING AREA: 20539
FINISHED BUILDING AREA: 11069
BASEMENT AREA: 2559
 # OF PRINCIPAL BUILDINGS: 5

ASSESSED VALUES

LAND: $3,307,100
YARD: $125,900
BUILDING: $1,942,900
TOTAL: $5,375,900

BUILDING EXTERIOR

BUILDING STYLE: Restored His
UNITS: 1
YEAR BUILT: 1745
FRAME:
EXTERIOR WALL COVER: Clapboard
ROOF STYLE:
ROOF COVER: Wood Shingle

BUILDING INTERIOR

INTERIOR WALL:
FLOOR COVER:
HEAT TYPE: Radiant Hot
FUEL TYPE: Oil
PERCENT A/C: False
 # OF ROOMS: 11
 # OF BEDROOMS: 4
 # OF FULL BATHS: 4
 # OF HALF BATHS: 1
 # OF ADDITIONAL FIXTURES: 1
 # OF KITCHENS: 1
 # OF FIREPLACES: 5
 # OF METAL FIREPLACES: 0
 # OF BASEMENT GARAGES: 0

SKETCH

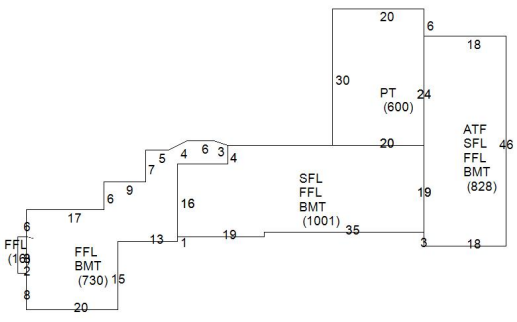

PHOTO





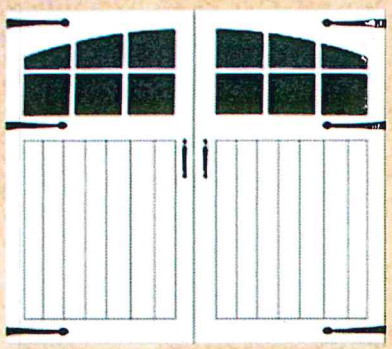

Louisville

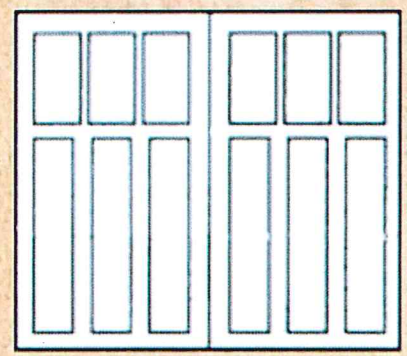

Monte Carlo

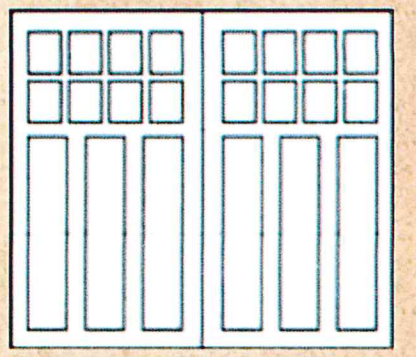

New Orleans

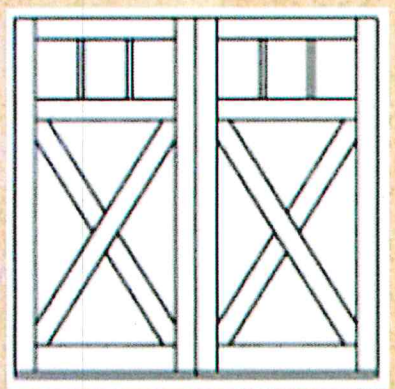

Olympic Crossbuck 3 Lite

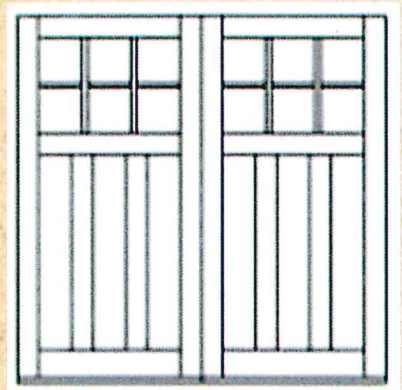

Olympic 6 Lite

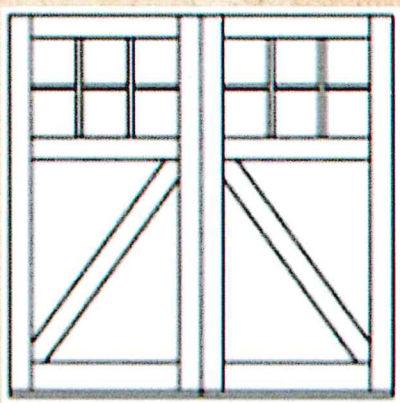

Olympic 6 Braced Lite

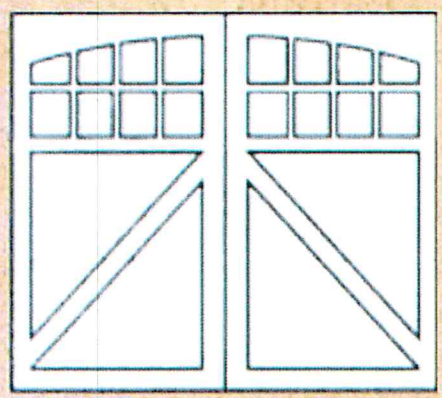

Wilmington

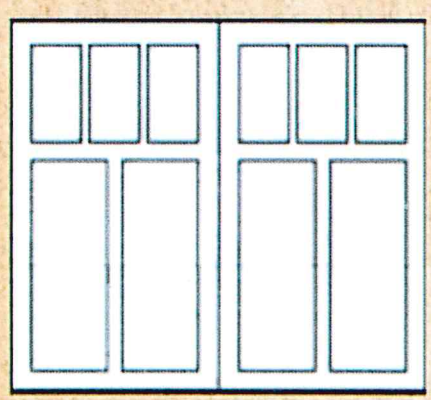

Santo Tomé

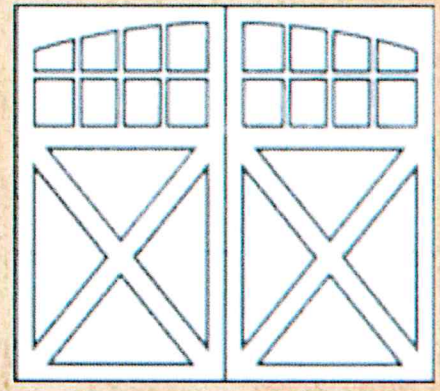

Richmond

Bristol Historic District Commission

Application for Review of Proposed Work - Printable Application

HDC-26-79	Contributing	June 9, 2026

THIS DOCUMENT IS NOT A SUBSTITUTE FOR A BUILDING, ELECTRICAL, SIGN, MECHANICAL, DEMOLITION, SOLAR OR FENCE PERMIT APPLICATION. THESE PERMITS MUST BE APPLIED FOR AND APPROVED BY THE BRISTOL BUILDING DEPARTMENT BEFORE WORK CAN BEGIN.

Project Address	Assessor's Plat/Lot
301 HOPE ST , BRISTOL, RI, 02809	010-0078-000

Applicant	Architect/Engineer	Contractor
Eli Dunn		Christine Depoto

Property Owner (If Different from Applicant)	Owner Mailing Address (If different than Project Address)
301 Hope Street, LLC	P.O. Box 903 Bristol, R.I. 02809

Work Category:	Sign(s)/Landscaping

Description of proposed work:
a large black mural/restaurant logo on the side of the building

Property History

Building Survey Data	
RIHPHC ID #:	BRIS00646
HISTORIC NAME:	Waldron, Samuel S., House
ARCH. STYLE:	Federal
ORIGINAL CONSTRUCTION DATE (est.):	1797
ALTERATIONS TO MAJOR ARCH. SINCE 1978 (Height, Massing, Wall Covering, Trim, Windows. Porches)	

Eli Dunn
Applicant's Digital Signature
Date: June 9, 2026

CAI Property Card

Town of Bristol, RI

GENERAL PROPERTY INFORMATION

LOCATION: 301 HOPE ST
ACRES: 0.0777
PARCEL ID: 010-0078-000
LAND USE CODE: 04
CONDO COMPLEX:
OWNER: 301 HOPE STREET,LLC
CO - OWNER:
MAILING ADDRESS: P.O. BOX 903

ZONING: D
PATRIOT ACCOUNT #: 594

SALE INFORMATION

SALE DATE: 4/11/2000
BOOK & PAGE: 736-334
SALE PRICE: 0
SALE DESCRIPTION:
SELLER: DEMEDEIROS, VICTOR P.

PRINCIPAL BUILDING AREAS

GROSS BUILDING AREA: 2620
FINISHED BUILDING AREA: 2596
BASEMENT AREA:
 # OF PRINCIPAL BUILDINGS: 1

ASSESSED VALUES

LAND: $196,800
YARD: $0
BUILDING: $180,700
TOTAL: $377,500

BUILDING EXTERIOR

BUILDING STYLE: Mixed Use
UNITS: 1
YEAR BUILT: 1789
FRAME: Masonry
EXTERIOR WALL COVER: Wood Shngle
ROOF STYLE: Gable
ROOF COVER: Asphalt Shin

BUILDING INTERIOR

INTERIOR WALL: Plaster
FLOOR COVER:
HEAT TYPE: BB Hot Water
FUEL TYPE: Oil
PERCENT A/C: False
 # OF ROOMS: 4
 # OF BEDROOMS: 2
 # OF FULL BATHS: 2
 # OF HALF BATHS: 0
 # OF ADDITIONAL FIXTURES: 0
 # OF KITCHENS: 1
 # OF FIREPLACES: 0
 # OF METAL FIREPLACES: 0
 # OF BASEMENT GARAGES: 0

SKETCH

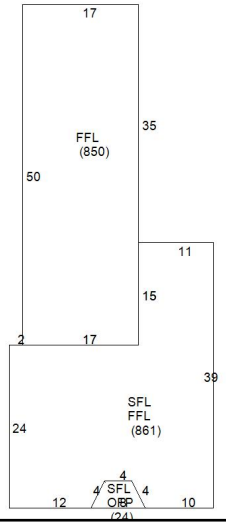

PHOTO

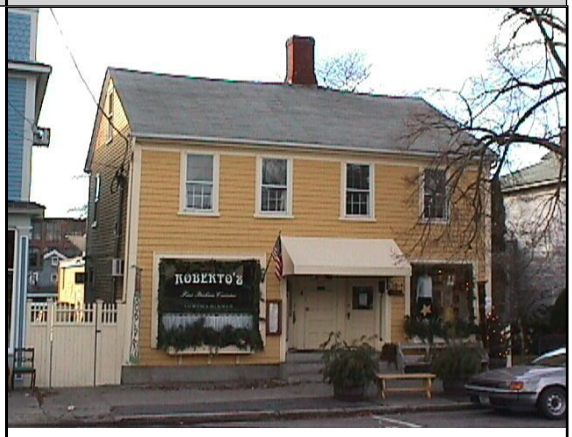

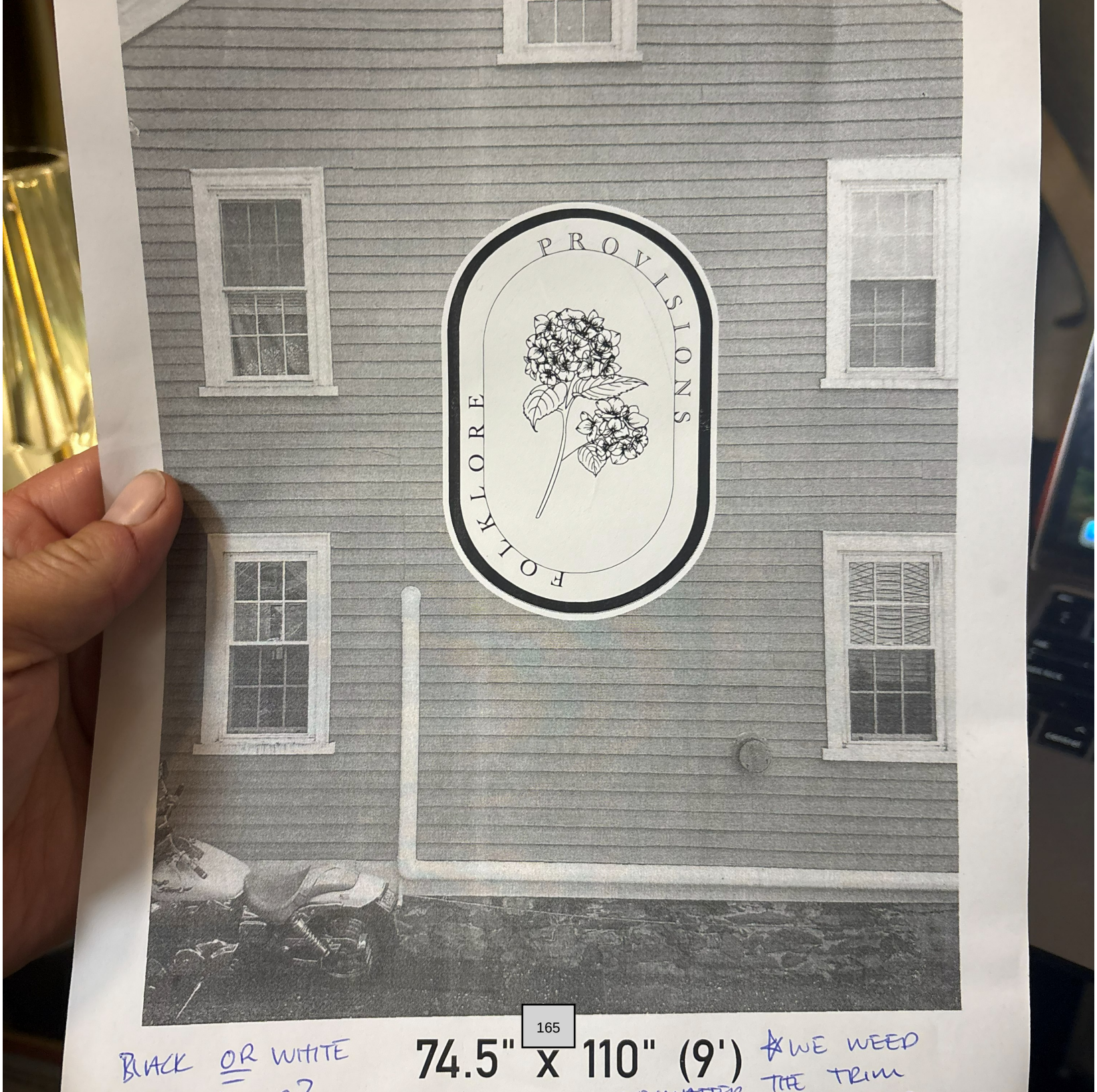

BLACK OR WHITE

74.5" X 110" (9')

*WE NEED THE TRIM


PROVISIONS
FOLKLORE

Bristol Historic District Commission

Application for Review of Proposed Work - Printable Application

HDC-26-80		June 11, 2026

THIS DOCUMENT IS NOT A SUBSTITUTE FOR A BUILDING, ELECTRICAL, SIGN, MECHANICAL, DEMOLITION, SOLAR OR FENCE PERMIT APPLICATION. THESE PERMITS MUST BE APPLIED FOR AND APPROVED BY THE BRISTOL BUILDING DEPARTMENT BEFORE WORK CAN BEGIN.

Project Address	Assessor's Plat/Lot
799 Hope St, Unit , Bristol, RI, 02809	007-013

Applicant	Architect/Engineer	Contractor
Gifford/Clerkin		

Property Owner (If Different from Applicant)	Owner Mailing Address (If different than Project Address)
Town of Bristol	

Work Category:	Sign(s)/Landscaping

Description of proposed work:
The Bristol Garden Club is seeking approval of the installation of two permanent/semi-permanent storyboard signs to be located at Mr Perry's Garden, 799 Hope Street. The signs will be single pedestal and mirror the design of other storyboards located throughout town. One board will be titled Bristol Garden Club. One board will be titled Mrs. Susan Emma Turner Perry "Mrs. Perry"

Property History

Building Survey Data	
RIHPHC ID #:	
HISTORIC NAME:	
ARCH. STYLE:	
ORIGINAL CONSTRUCTION DATE (est.):	
ALTERATIONS TO MAJOR ARCH. SINCE 1978 (Height, Massing, Wall Covering, Trim, Windows. Porches)	

Lucille Clerkin
Applicant's Digital Signature
Date: June 11, 2026

CAI Property Card

Town of Bristol, RI

GENERAL PROPERTY INFORMATION

LOCATION: HOPE ST
ACRES: 0.9188
PARCEL ID: 007-0013-000
LAND USE CODE: 78
CONDO COMPLEX:
OWNER: TOWN OF BRISTOL
CO - OWNER:
MAILING ADDRESS: 10 COURT ST

ZONING: OS
PATRIOT ACCOUNT #: 270

SALE INFORMATION

SALE DATE:
BOOK & PAGE:
SALE PRICE: 0
SALE DESCRIPTION:
SELLER:

PRINCIPAL BUILDING AREAS

GROSS BUILDING AREA:
FINISHED BUILDING AREA:
BASEMENT AREA:
 # OF PRINCIPAL BUILDINGS:

ASSESSED VALUES

LAND: $55,240
YARD: $0
BUILDING: $0
TOTAL: $55,240

BUILDING EXTERIOR

BUILDING STYLE:
UNITS: 0
YEAR BUILT: 0
FRAME:
EXTERIOR WALL COVER:
ROOF STYLE:
ROOF COVER:

BUILDING INTERIOR

INTERIOR WALL:
FLOOR COVER:
HEAT TYPE:
FUEL TYPE:
PERCENT A/C: False
 # OF ROOMS: 0
 # OF BEDROOMS: 0
 # OF FULL BATHS: 0
 # OF HALF BATHS: 0
 # OF ADDITIONAL FIXTURES: 0
 # OF KITCHENS: 0
 # OF FIREPLACES: 0
 # OF METAL FIREPLACES: 0
 # OF BASEMENT GARAGES: 0

SKETCH

NO SKETCH AVAILABLE

PHOTO

NO PHOTO AVAILABLE

CAI Technologies
Precision Mapping. Geospatial Solutions.
www.cai-tech.com
This information is believed to be correct but is subject to change and is not warranteed.

SIGNPRO ARCHITECTURAL

PROJECT NO. 260_ _ _
QUOTE NO. 8005
rev #1 01/01/2026

Bristol Department of Parks and Recreation
101 Asylum Road
Bristol, RI 02809

Bristol Garden Club

Drawing & Page Number		Approved No Changes	Approved as Noted	Revise and Resubmit
Type 3 - Production	Pg 02	☐	☐	☐
	Pg 03	☐	☐	☐

Drawing & Page Number	Approved No Changes	Approved as Noted	Revise and Resubmit

Signature

Date

SIGNPRO ARCHITECTURAL
483 BROWNSDALE ROAD, RENFREW, PA 16053
ph 724.586.5600 fax 724.586.5699
www.signproinc.com

IMPORTANT - Please Read

Please review each drawing carefully and note any changes by each Sign Type. Please double-check all measurements, spelling, colors, and sizes for accuracy.

Check the box "**Approved No Changes**" if no changes are required.

Check the box "**Approved as Noted**" if there are changes that do not require new drawings.

Check the box "**Revise and Resubmit**" if the changes require new drawings.

A signed and dated set of approved drawings are required prior to being released into production. If revisions are required, drawings will be revised and resubmitted for approval in a timely manner.

Once drawings are signed/approved and put into production, any requested changes or omissions will be the responsibility of the client.

Please contact your Project Manager with any questions or comments regarding these drawings.

NOTE:

Drawings marked as "Typical" represent the standard method of production and display all colors, materials, and specifications for that Sign Type. When approving drawings marked "Typical", you are confirming the overall layout, colors, materials, sizes, etc. Most often the copy or graphics shown on a "Typical" drawing are used as a placeholder for the final sign copy.

Drawings marked as "Production" represent the actual copy and graphics for each individual sign. Floor numbers, symbols, and names are shown in the layout as they will appear on the finished product. Approving a drawing marked "Production" indicates that you have reviewed and approved all information for each individual sign.

Production Artist:
Bill Buzza
412-287-1919

Client Contact:
Diana Campbell
508-241-2928
dbcamp2021@gmail.com

THIS DRAWING CONTAINS CONFIDENTIAL AND PROPRIETARY INFORMATION OF SIGNPRO, INC. AND MAY NOT BE REPRODUCED, REDESIGNED OR DISTRIBUTED WITHOUT PRIOR WRITTEN CONSENT FROM THE DESIGNER OR SIGNPRO, INC.

PRODUCTION

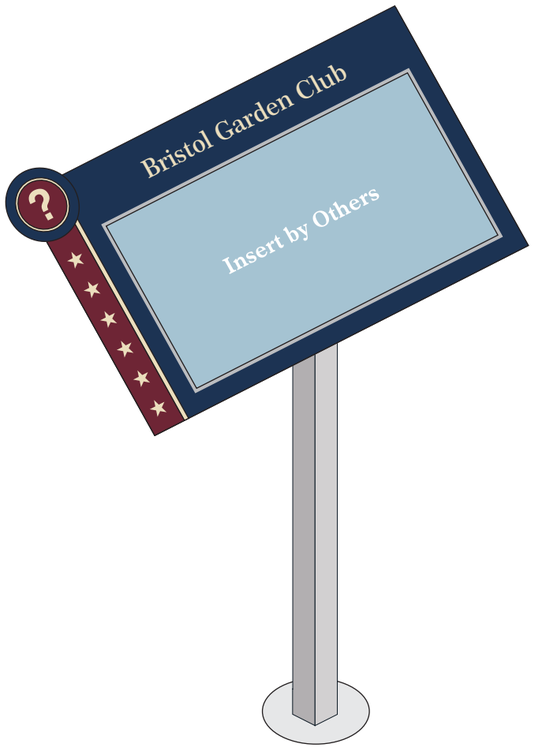

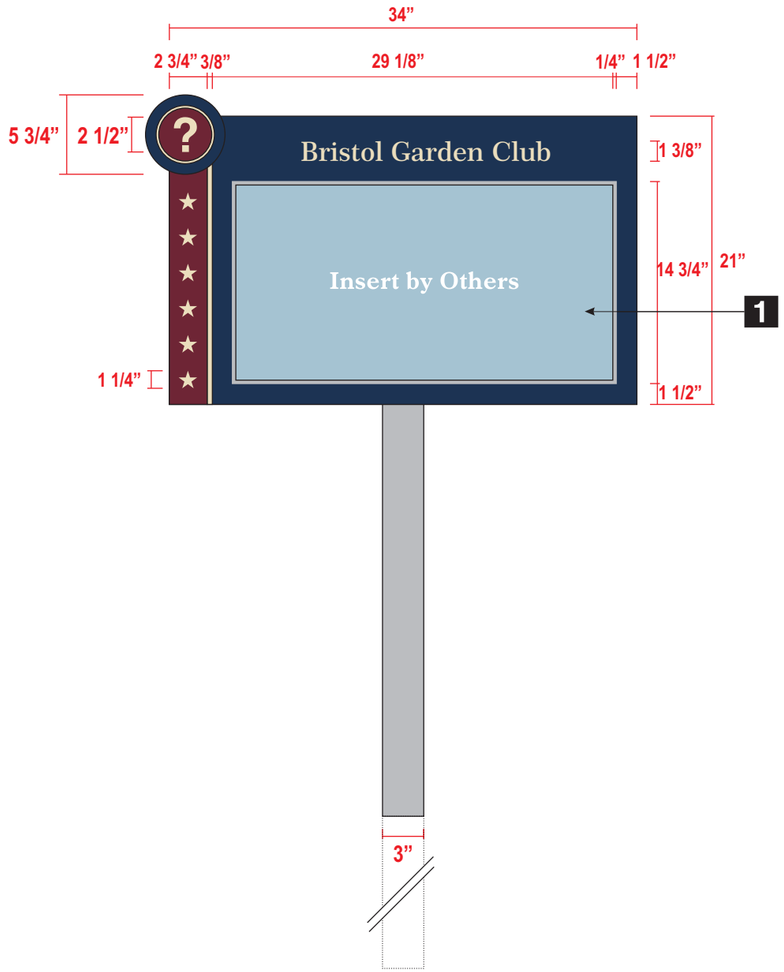

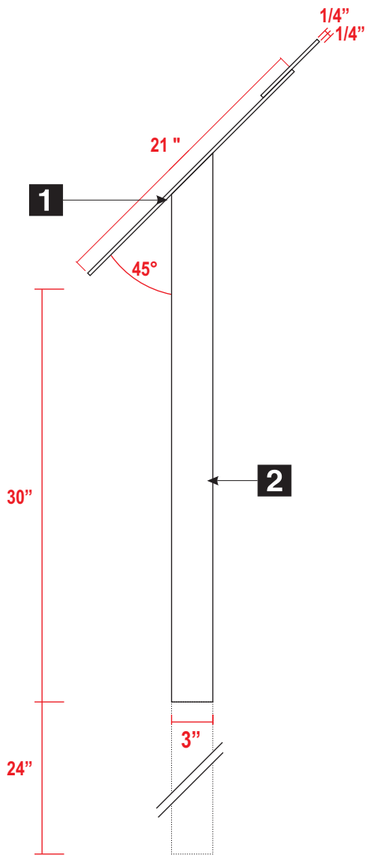

SIGNPRO ARCHITECTURAL
483 BROWNSDALE RD. RENFREW, PA 16053
ph 724.586.5600 | fax 724.586.5699
www.signproinc.com

Item 9.

Bristol Garden Club

Bristol Garden Club

Sign Type: 3

Qty:	1
Size:	As Shown
Face Matl:	1/8” Aluminum
Face Color:	PMS 533
Graphics:	Surface applied HP Vinyl
Graphics Color:	PMS 7500 PMS 505
Font:	Century751 SeBd BT

CONSTRUCTION DETAIL:

1. 21” x 34” x 1/4” Aluminum Panel
   - Surface painted PMS 533
   - Surface Applied HP vinyl Graphics PMS 7500, PMS 505
   - 1/4” Aluminum Circle attached to sign
2. 3” x 3” Aluminum Tube Stand
   - Weld to 1/4” Aluminum plate back side
   - Paint MAPS Brushed Aluminum
   - Direct Bury in 8” round concrete foundation

☐ Approved
☐ Approved as Noted
☐ Revise & Resubmit

Signature: _____

Date: _____

Drawn by:	WRB (bill.buzza@signproinc.com)
Date:	.2026
Project No:	7025
File Name:	260_ _ _ Prod Dwg.cdr
Revision:	1

Sign Type:	3
Sheet No:	02



SIGNPRO ARCHITECTURAL

PROJECT NO. 260_ _ _
QUOTE NO. 8005
rev #1 01/01/2026

Bristol Department of Parks and Recreation
101 Asylum Road
Bristol, RI 02809

Bristol Garden Club

Drawing & Page Number		Approved No Changes	Approved as Noted	Revise and Resubmit
Type 3 - Production	Pg 02	☐	☐	☐
	Pg 03	☐	☐	☐

Drawing & Page Number	Approved No Changes	Approved as Noted	Revise and Resubmit

Signature

Date

SIGNPRO ARCHITECTURAL
483 BROWNSDALE ROAD, RENFREW, PA 16053
ph 724.586.5600 fax 724.586.5699
www.signproinc.com

IMPORTANT - Please Read

Please review each drawing carefully and note any changes by each Sign Type. Please double-check all measurements, spelling, colors, and sizes for accuracy.

Check the box "**Approved No Changes**" if no changes are required.

Check the box "**Approved as Noted**" if there are changes that do not require new drawings.

Check the box "**Revise and Resubmit**" if the changes require new drawings.

A signed and dated set of approved drawings are required prior to being released into production. If revisions are required, drawings will be revised and resubmitted for approval in a timely manner.

Once drawings are signed/approved and put into production, any requested changes or omissions will be the responsibility of the client.

Please contact your Project Manager with any questions or comments regarding these drawings.

NOTE:

Drawings marked as "Typical" represent the standard method of production and display all colors, materials, and specifications for that Sign Type. When approving drawings marked "Typical", you are confirming the overall layout, colors, materials, sizes, etc. Most often the copy or graphics shown on a "Typical" drawing are used as a placeholder for the final sign copy.

Drawings marked as "Production" represent the actual copy and graphics for each individual sign. Floor numbers, symbols, and names are shown in the layout as they will appear on the finished product. Approving a drawing marked "Production" indicates that you have reviewed and approved all information for each individual sign.

Production Artist:

Bill Buzza
412-287-1919

Client Contact:

Diana Campbell
508-241-2928
dbcamp2021@gmail.com

THIS DRAWING CONTAINS CONFIDENTIAL AND PROPRIETARY INFORMATION OF SIGNPRO, INC. AND MAY NOT BE REPRODUCED, REDESIGNED OR DISTRIBUTED WITHOUT PRIOR WRITTEN CONSENT FROM THE DESIGNER OR SIGNPRO, INC.

TYPICAL



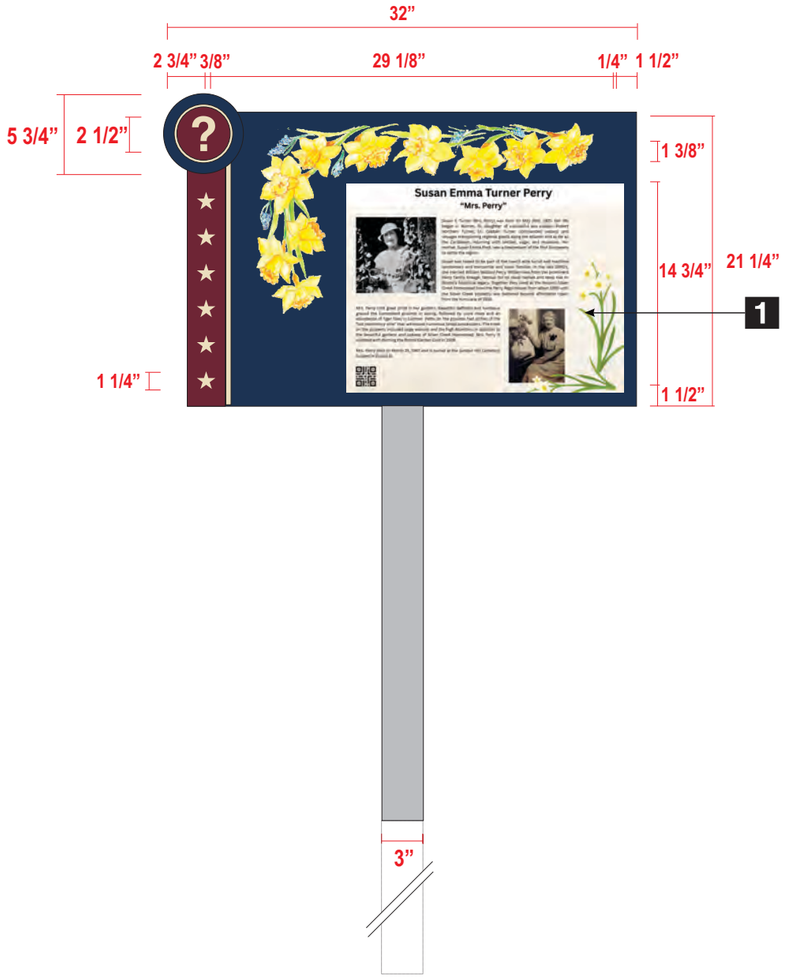

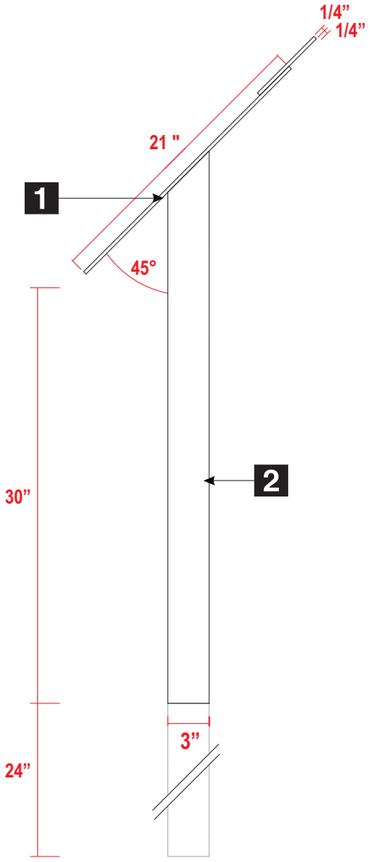

SIGNPRO ARCHITECTURAL
483 BROWNSDALE RD. RENFREW, PA 16053
ph 724.586.5600 | fax 724.586.5699
www.signproinc.com

Bristol Garden Club

Bristol Garden Club

Sign Type: 3

Qty:	**2**
Size:	**As Shown**
Face Matl:	**1/8" Aluminum**
Face Color:	**PMS 533**
Graphics:	**Surface applied HP Vinyl**
Graphics Color:	**PMS 7500** **PMS 505**
Font:	**Century751 SeBd BT**

CONSTRUCTION DETAIL:

1. **21" x 34" x 1/4" Aluminum Panel**
   - **Surface painted PMS 533**
   - **Surface Applied HP vinyl Graphics PMS 7500, PMS 505**
   - **1/4" Aluminum Circle attached to sign**
2. **3" x 3" Aluminum Tube Stand**
   - **Weld to 1/4" Aluminum plate back side**
   - **Paint MAPS Brushed Aluminum**
   - **Direct Bury in 8" round concrete foundation**

☐ Approved
☐ Approved as Noted
☐ Revise & Resubmit

Signature: _____

Date: _____

Drawn by:	WRB (bill.buzza@signproinc.com)
Date:	06.03.2026
Project No:	8005
File Name:	260_ _ _ Prod Dwg.cdr
Revision:	1

Sign Type:	3
Sheet No:	02

THIS DRAWING CONTAINS CONFIDENTIAL AND PROPRIETARY INFORMATION OF SIGNPRO, INC. AND MAY NOT BE REPRODUCED, REDESIGNED OR DISTRIBUTED WITHOUT PRIOR WRITTEN CONSENT FROM THE DESIGNER OR SIGNPRO, INC.

PRODUCTION

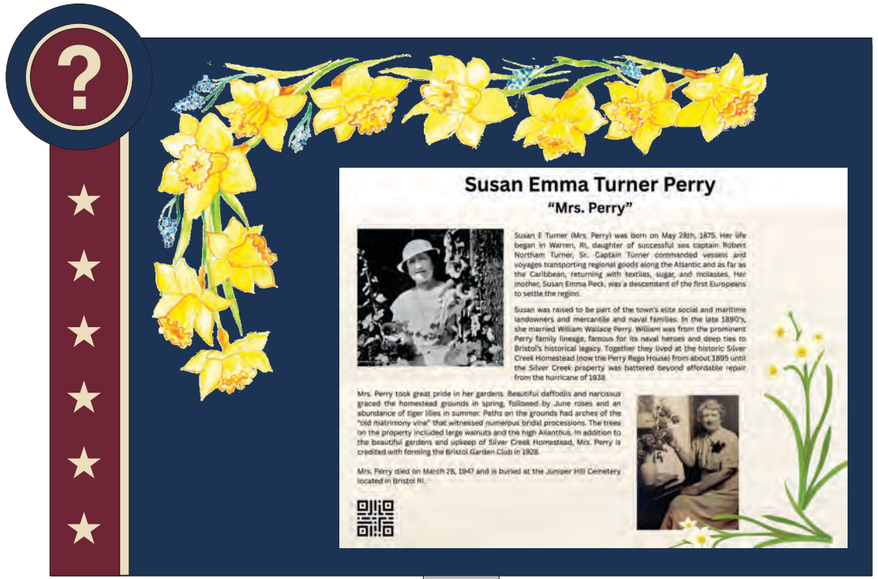



SIGNPRO ARCHITECTURAL
483 BROWNSDALE RD. RENFREW, PA 16053
ph 724.586.5600 | fax 724.586.5699
www.signproinc.com

Bristol Garden Club

Bristol Garden Club

Sign Type: 3

Qty:	2
Size:	As Shown
Face Matl:	1/8" Aluminum
Face Color:	PMS 533
Graphics:	Surface applied HP Vinyl
Graphics Color:	PMS 7500 PMS 505
Font:	Century751 SeBd BT

CONSTRUCTION DETAIL:

1. 21" x 34" x 1/4" Aluminum Panel
   - Surface painted PMS 533
   - Surface Applied HP vinyl Graphics PMS 7500, PMS 505
   - 1/4" Aluminum Circle attached to sign
2. 3" x 3" Aluminum Tube Stand
   - Weld to 1/4" Aluminum plate back side
   - Paint MAPS Brushed Aluminum
   - Direct Bury in 8" round concrete foundation

☐ Approved
☐ Approved as Noted
☐ Revise & Resubmit

Signature: _____

Date: _____

Drawn by:	WRB (bill.buzza@signproinc.com)
Date:	06.03.2026
Project No:	8005
File Name:	260_ _ _ Prod Dwg.cdr
Revision:	1

Sign Type:	3
Sheet No:	02

Bristol Historic District Commission

Application for Review of Proposed Work - Printable Application

HDC-26-81		June 11, 2026

THIS DOCUMENT IS NOT A SUBSTITUTE FOR A BUILDING, ELECTRICAL, SIGN, MECHANICAL, DEMOLITION, SOLAR OR FENCE PERMIT APPLICATION. THESE PERMITS MUST BE APPLIED FOR AND APPROVED BY THE BRISTOL BUILDING DEPARTMENT BEFORE WORK CAN BEGIN.

Project Address	Assessor's Plat/Lot
1200 HOPE ST , BRISTOL, RI, 02809	103-0002-000

Applicant	Architect/Engineer	Contractor
Kyle Ritchie		Build with Confidence LLC

Property Owner (If Different from Applicant)	Owner Mailing Address (If different than Project Address)
Infinity 1217 LLC	

Work Category:	Addition to Structure(s)

Description of proposed work:

To ensure proper ongoing maintenance and management of the site, we propose replacing the original exterior well house (which has been demolished and was in a pile on sitew when we took it over and I have included a picture as it once existed and gave us the parameters of what we are looking to build). The new well house will be located in the front yard behind the privet hedge, as indicated on the plan, directly over the existing shallow well. This well, which dates back to the original structure, provides a reliable flow of over 10 gallons per minute (GPM) of continuous water.

This replacement will support the long-term care and longevity of the site.

We also respectfully request administrative approval for all hardscaping and landscaping improvements on the property, including walkways, the bocce court, putting greens, and any and all associated landscaping enhancements.

Property History

Building Survey Data	
RIHPHC ID #:	
HISTORIC NAME:	
ARCH. STYLE:	
ORIGINAL CONSTRUCTION DATE (est.):	

ALTERATIONS TO MAJOR ARCH. SINCE 1978 (Height, Massing, Wall Covering, Trim, Windows. Porches)

Kyle V Ritchie
Applicant's Digital Signature
Date: June 11, 2026

CAI Property Card

Town of Bristol, RI

GENERAL PROPERTY INFORMATION

LOCATION: 1200 HOPE ST
ACRES: 1.7609
PARCEL ID: 103-0002-000
LAND USE CODE: 02
CONDO COMPLEX:
OWNER: INFINITY 1217, LLC
CO - OWNER:
MAILING ADDRESS: 545 CAMP DIXIE RD

ZONING: R-10
PATRIOT ACCOUNT #: 5652

SALE INFORMATION

SALE DATE: 11/15/2024
BOOK & PAGE: 2264-175
SALE PRICE: 2,572,700
SALE DESCRIPTION: Building in
SELLER: MI 1200 HOPE ST LLC

PRINCIPAL BUILDING AREAS

GROSS BUILDING AREA: 9412
FINISHED BUILDING AREA: 5235
BASEMENT AREA: 2120
 # OF PRINCIPAL BUILDINGS: 1

ASSESSED VALUES

LAND: $191,200
YARD: $0
BUILDING: $572,700
TOTAL: $763,900

BUILDING EXTERIOR

BUILDING STYLE: 2 Family
UNITS: 1
YEAR BUILT: 1900
FRAME: Wood Frame
EXTERIOR WALL COVER: Clapboard
ROOF STYLE: Gable
ROOF COVER: Asphalt Shin

BUILDING INTERIOR

INTERIOR WALL: Plaster
FLOOR COVER: Hardwood
HEAT TYPE: BB Hot Water
FUEL TYPE: Gas
PERCENT A/C: True
 # OF ROOMS: 9
 # OF BEDROOMS: 4
 # OF FULL BATHS: 4
 # OF HALF BATHS: 2
 # OF ADDITIONAL FIXTURES: 2
 # OF KITCHENS: 2
 # OF FIREPLACES: 2
 # OF METAL FIREPLACES: 0
 # OF BASEMENT GARAGES: 0

SKETCH

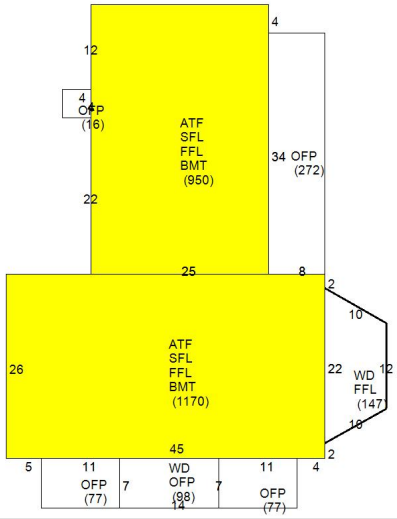

PHOTO





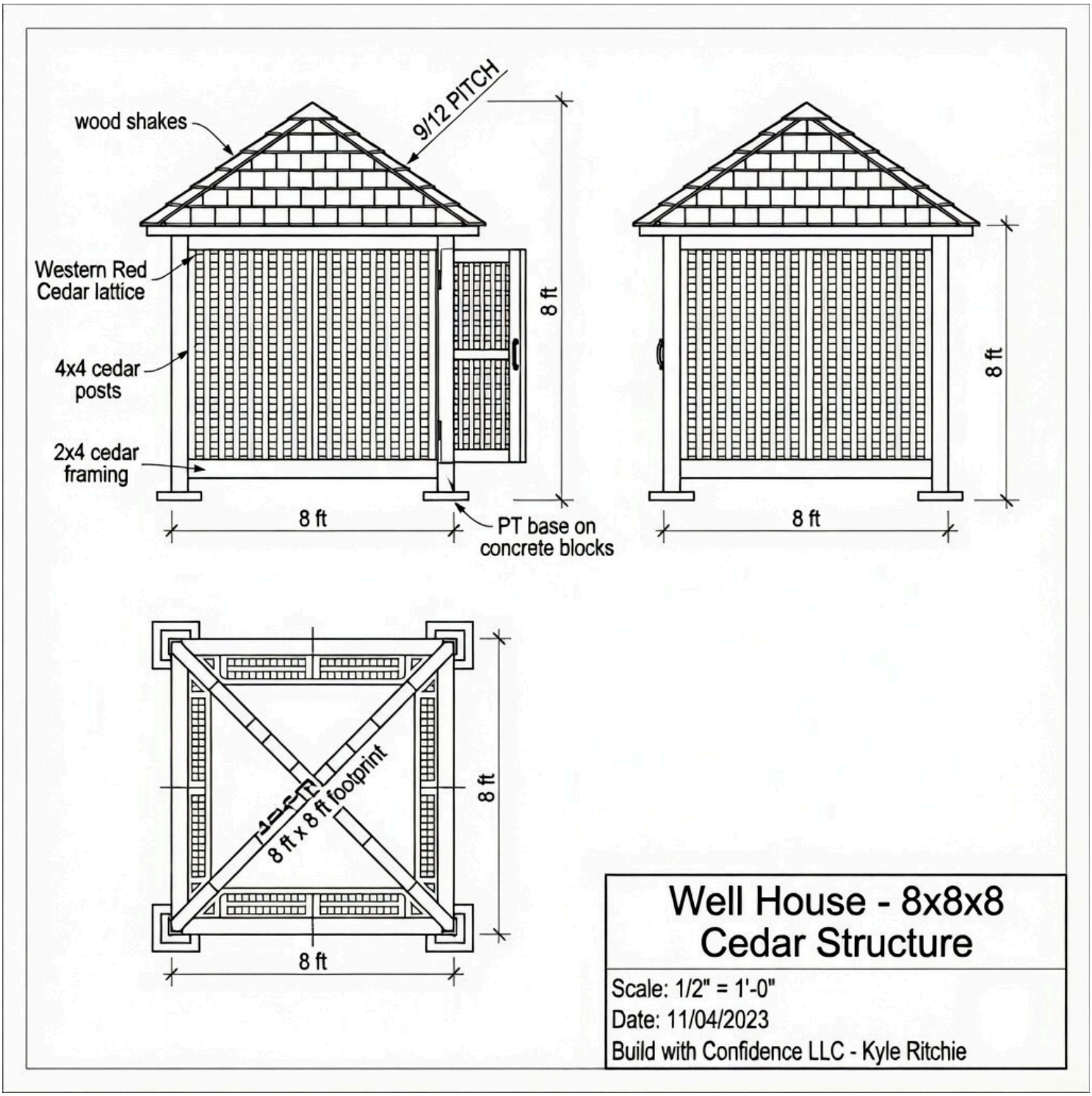
wood shakes
9/12 PITCH
Western Red Cedar lattice
4x4 cedar posts
2x4 cedar framing
8 ft
8 ft
PT base on concrete blocks
8 ft
8 ft
8 ft x 8 ft footprint
8 ft
8 ft
Well House - 8x8x8 Cedar Structure
Scale: 1/2" = 1'-0"
Date: 11/04/2023
Build with Confidence LLC - Kyle Ritchie

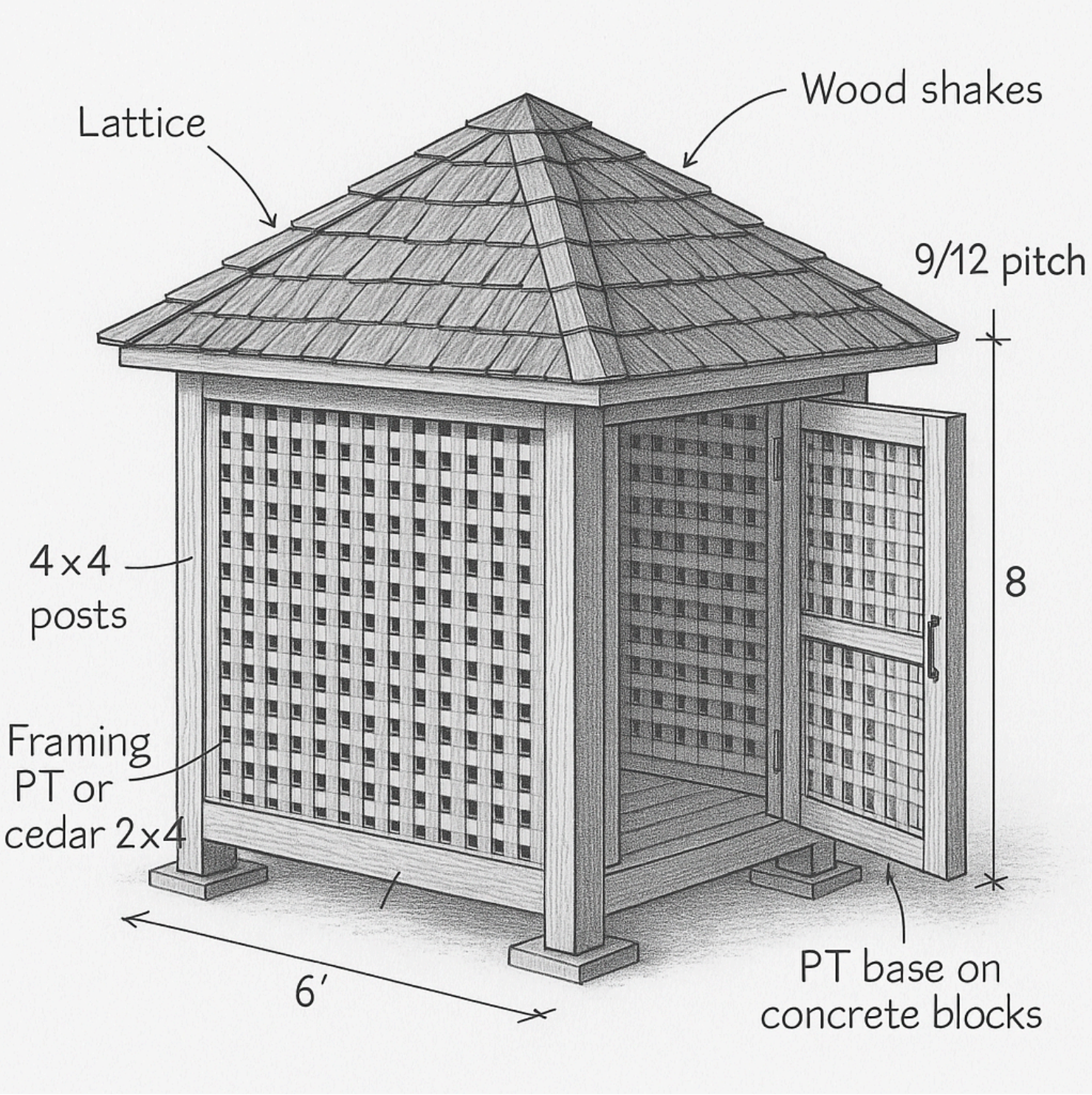
Lattice
Wood shakes
9/12 pitch
4x4
posts
8
Framing
PT or
cedar 2x4
6′
PT base on
concrete blocks

SITE PLAN

Address:
1200 Hope St
Bristol, RI 02809

Assessor's Parcel Number:
BRIS M:103 L:2

Parcel Area:
1.76 Acres

Land Use:
Residential
Single Family Residence

Zoning: R-10

Legal Description: /

Subdivision: /

Owner: INFINITY 1217 LLC

Date: June, 2026

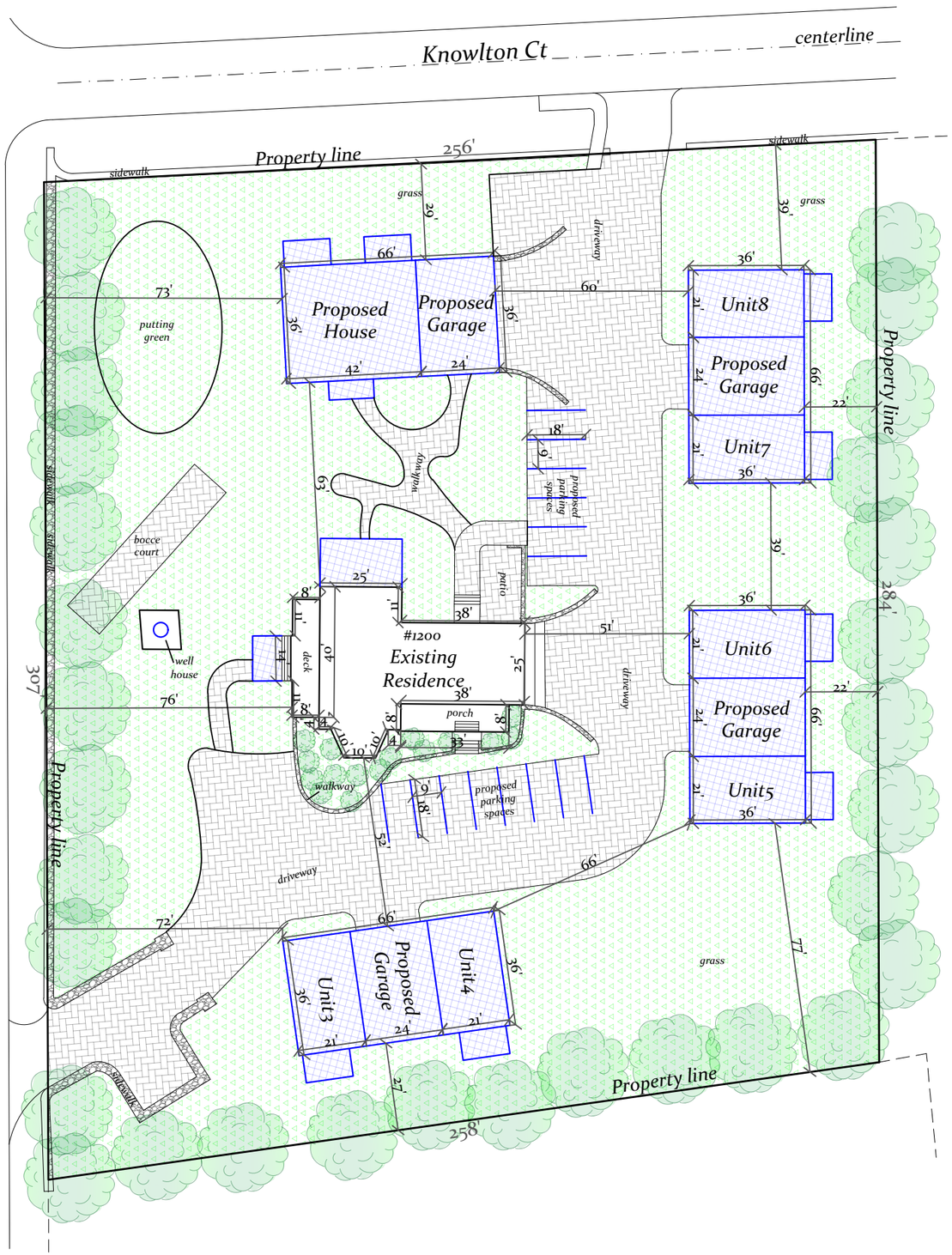

GRID NORTH

Scale:
1"=40'
Paper size:
11"x 17"

Legend

- Property line
- Topography line
- Wall line
- Roof line
- Retaining wall
- Fence
- Proposed addition

SITEPLAN4YOU.com

Graphic scale
0 20' 40' 80'

Disclaimer: This is not a Legal Survey, nor is it intended to be or replace one. These measurements are approx[illegible] are for illustrative purposes only. This work product represents only generalized location of features, objects or boundaries and should not be relied upon as being legally authoritative for the precise location of any feature, objects or boundary.

Bristol Historic District Commission

Application for Review of Proposed Work - Printable Application

HDC-26-82	Contributing	June 11, 2026

THIS DOCUMENT IS NOT A SUBSTITUTE FOR A BUILDING, ELECTRICAL, SIGN, MECHANICAL, DEMOLITION, SOLAR OR FENCE PERMIT APPLICATION. THESE PERMITS MUST BE APPLIED FOR AND APPROVED BY THE BRISTOL BUILDING DEPARTMENT BEFORE WORK CAN BEGIN.

Project Address	Assessor's Plat/Lot
8 CONSTITUTION ST , BRISTOL, RI, 02809	011-0020-000

Applicant	Architect/Engineer	Contractor
John Marshall	SM Drafting Design	Dyer Contracting, LLC

Property Owner (If Different from Applicant)	Owner Mailing Address (If different than Project Address)
	950 Warren Avenue, East Providence, RI 02914

Work Category:	Remodeling of Structure(s)

Description of proposed work:
Remove Sliding glass door at rear of grage (south elevation) and replace with Andersen 400 sheries double hung full frame windows.

Property History

Building Survey Data	
RIHPHC ID #:	BRIS00411
HISTORIC NAME:	LeClair, Dr. Eugene, Office
ARCH. STYLE:	Craftsman
ORIGINAL CONSTRUCTION DATE (est.):	1904
ALTERATIONS TO MAJOR ARCH. SINCE 1978 (Height, Massing, Wall Covering, Trim, Windows. Porches)	
Second Floor Added	

Alfred R Rego Jr Esq for John Marshall
Applicant's Digital Signature
Date: June 11, 2026

CAI Property Card

Town of Bristol, RI

GENERAL PROPERTY INFORMATION

LOCATION: 8 CONSTITUTION ST
ACRES: 0.0615
PARCEL ID: 011-0020-000
LAND USE CODE: 01
CONDO COMPLEX:
OWNER: JM BRISTOL LLC
CO - OWNER: C/O DARROW EVERETT LLP
MAILING ADDRESS: 1 TURKS HEAD PL, 12TH FL

ZONING: R-6
PATRIOT ACCOUNT #: 648

SALE INFORMATION

SALE DATE: 7/25/2024
BOOK & PAGE: 2251-227
SALE PRICE: 300,000
SALE DESCRIPTION: Private Sale
SELLER: HALSEY PROPERTIES, LLC

PRINCIPAL BUILDING AREAS

GROSS BUILDING AREA: 2787
FINISHED BUILDING AREA: 1786
BASEMENT AREA: 621
 # OF PRINCIPAL BUILDINGS: 1

ASSESSED VALUES

LAND: $231,000
YARD: $3,000
BUILDING: $133,400
TOTAL: $367,400

BUILDING EXTERIOR

BUILDING STYLE: Conventional
UNITS: 1
YEAR BUILT: 1910
FRAME: Wood Frame
EXTERIOR WALL COVER: Wood Shngle
ROOF STYLE: Hip
ROOF COVER: Asphalt Shin

BUILDING INTERIOR

INTERIOR WALL: Plaster
FLOOR COVER: Hardwood
HEAT TYPE: BB Hot Water
FUEL TYPE: Oil
PERCENT A/C: False
 # OF ROOMS: 5
 # OF BEDROOMS: 2
 # OF FULL BATHS: 2
 # OF HALF BATHS: 0
 # OF ADDITIONAL FIXTURES: 0
 # OF KITCHENS: 1
 # OF FIREPLACES: 0
 # OF METAL FIREPLACES: 1
 # OF BASEMENT GARAGES: 0

SKETCH

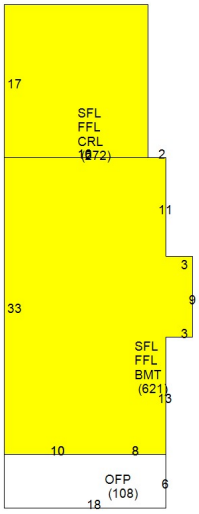

PHOTO



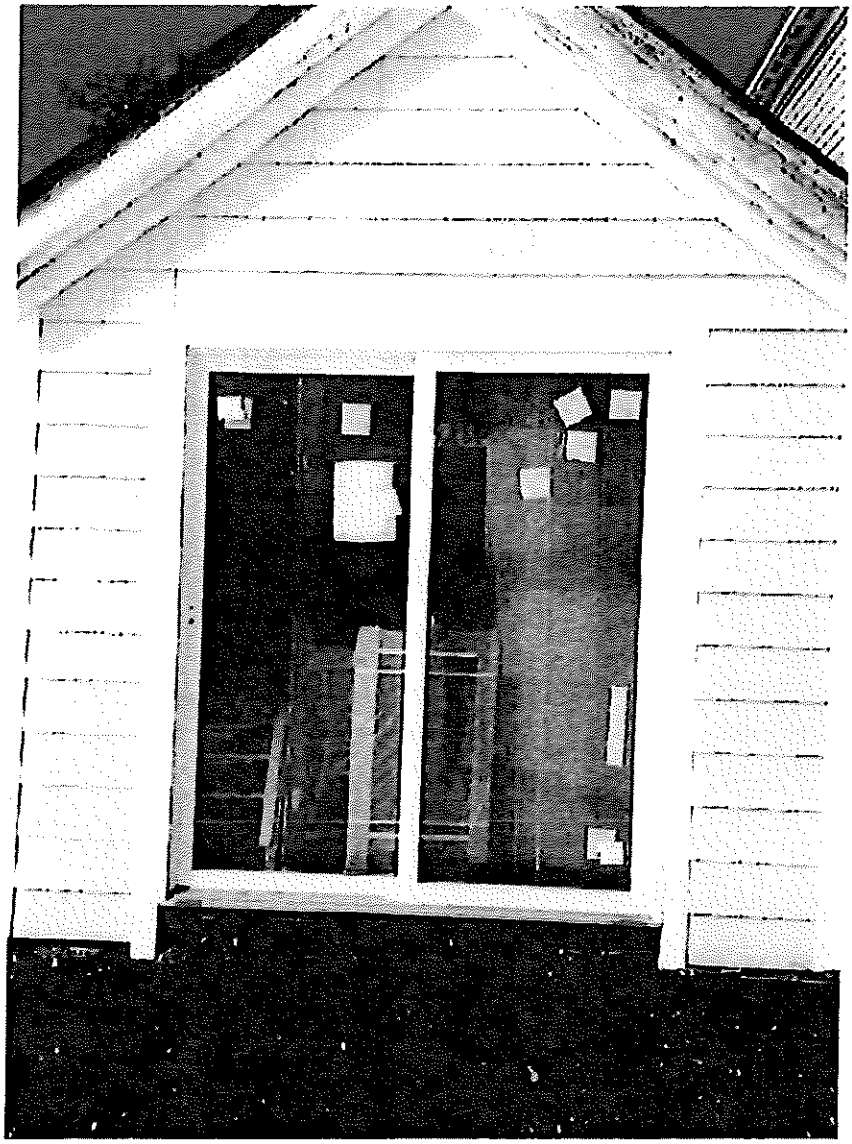

Sent from my iPhone

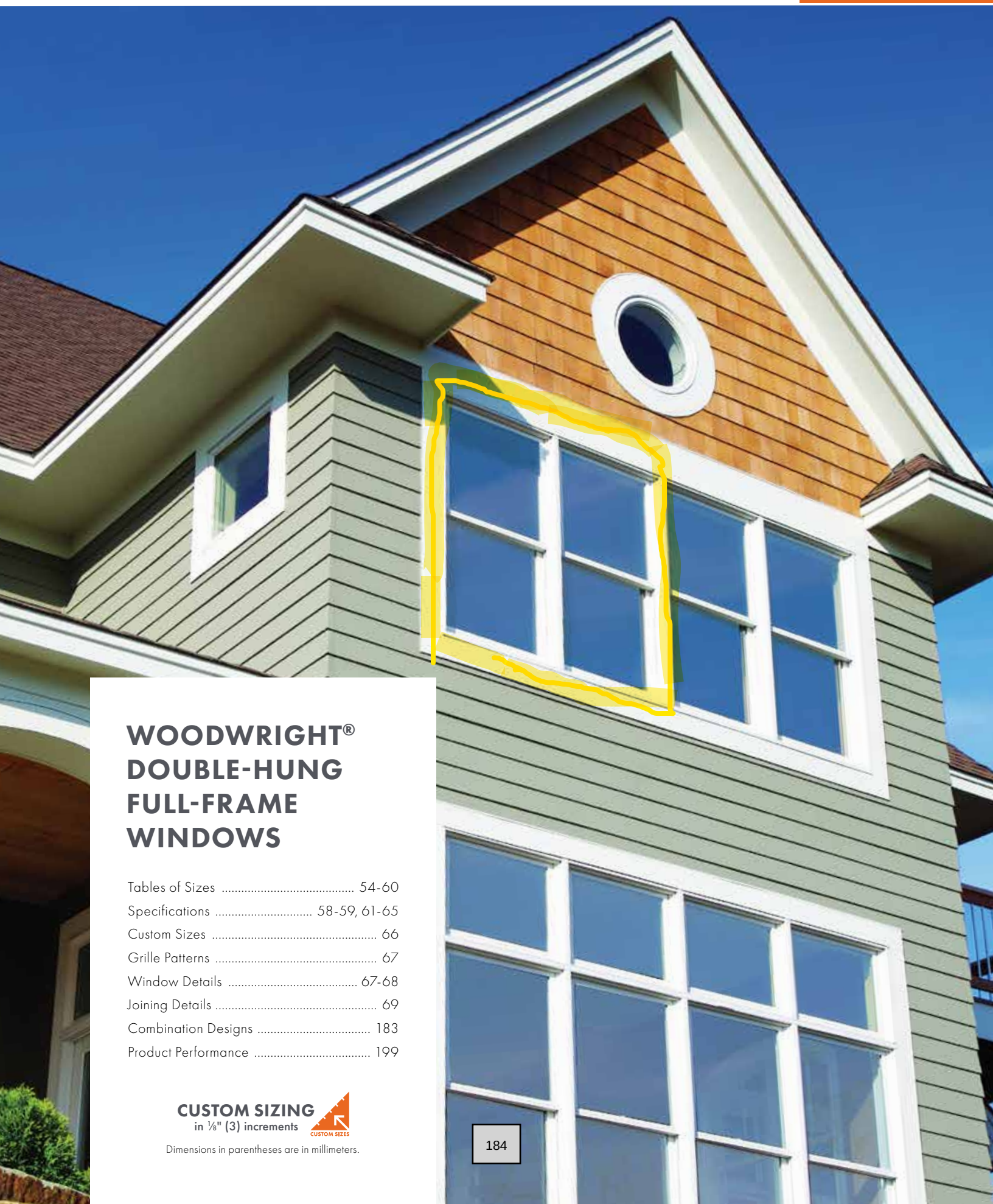

WOODWRIGHT® DOUBLE-HUNG FULL-FRAME WINDOWS

Tables of Sizes 54-60
Specifications 58-59, 61-65
Custom Sizes 66
Grille Patterns 67
Window Details 67-68
Joining Details 69
Combination Designs 183
Product Performance 199

CUSTOM SIZING
in ⅛" (3) increments

Dimensions in parentheses are in millimeters.

WOODWRIGHT® DOUBLE-HUNG FULL-FRAME WINDOWS

FEATURES

FRAME

A Perma-Shield® exterior cladding protects the frame – beautifully. Best of all, it's low maintenance and never needs painting.*

B Sill members are constructed with a wood core and Fibrex® material exterior for exceptional, long-lasting* performance.

C Natural wood stops are available in pine, maple, oak and prefinished white. Wood jamb liners add beauty and authenticity to the window interior.

D A factory-applied rigid vinyl installation flange on the head, sill and sides of the outer frame helps secure the unit to the structure.

E Multiple weatherstrip systems help provide a barrier against wind, rain and dust. The combination of spring-tension vinyl, rigid vinyl and flexible bulb weatherstrip is efficient and effective.

F For units with a white exterior color, the exterior jamb liner is white. For all other units, the exterior jamb liner is gray.

SASH

G Balancers in the sash enable contractors to screw through the jamb during installation without interfering with the window's operation.

Wood Jamb Liner



H The sash interior is natural wood with classic chamfer detailing. Available in pine, maple, oak and prefinished white.

I The low-maintenance sash exterior provides long-lasting* protection and performance. Sash exteriors on most units include Fibrex material.

J Sash joints simulate the look of traditional mortise-and-tenon construction inside and out.

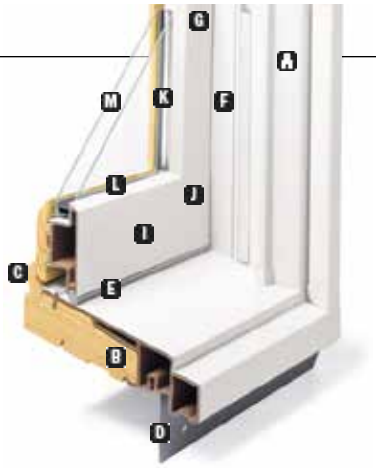

GLASS

K Glass spacers are available in black, stainless steel and white.

L Silicone bed glazing provides superior weathertightness and durability.

M High-Performance glass options include:

- Low-E4® glass
- Low-E4 HeatLock® glass
- Low-E4 SmartSun™ glass
- Low-E4 SmartSun HeatLock glass
- Low-E4 Sun glass
- Low-E4 PassiveSun® HeatLock glass

Tempered and other glass options are available. Contact your Andersen supplier.

A removable translucent film helps shield the glass from damage during delivery and construction, and simplifies finishing at the job site.

Patterned Glass

Patterned glass options are available. See page 11 for more details.

HARDWARE



The standard lock and keeper design provides an easy Tilt-to-Clean feature integrated into the lock.

EXTERIORS & INTERIORS

EXTERIOR COLORS



White | Canvas | Sandtone | Terratone

Dark Bronze | Forest Green | Black

INTERIOR OPTIONS

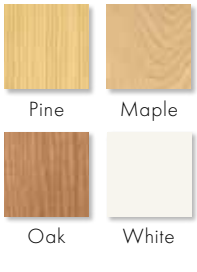

Pine | Maple

Oak | White

HARDWARE



Lock & Keeper

Antique Brass | Black | Bright Brass
Distressed Bronze | Distressed Nickel
Oil Rubbed Bronze | Satin Nickel
Stone | White

OPTIONAL HARDWARE Sold Separately

TRADITIONAL



Bar Lift

Available in all hardware finishes. Shown in distressed bronze.

TRADITIONAL



Hand Lift | Finger Lifts

Available in all hardware finishes. Shown in distressed nickel.

CLASSIC SERIES™



Bar Lift

Stone | White

CLASSIC SERIES



Hand Lift | Finger Lifts

Stone | **White**

CONTEMPORARY



Bar Lift

Available in all hardware finishes. Shown in bright brass.

ESTATE™



Hand Lift | Finger Lifts

Antique Brass | Bright Brass
Distressed Bronze | Distressed Nickel
Oil Rubbed Bronze | **Satin Nickel**

Bold name denotes finish shown.

HARDWARE FINISHES

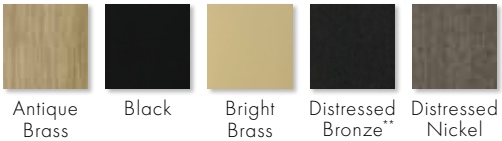

Antique Brass | Black | Bright Brass | Distressed Bronze** | Distressed Nickel

Oil Rubbed Bronze** | Satin Nickel | Stone | White

Black color has a matte finish.

*Visit andersenwindows.com/warranty for details.
**These finishes are "living finishes" that will change with time and use, see limited warranty for details.
Naturally occurring variations in grain, color and texture of wood make each window one of a kind. All wood interiors are unfinished unless a finish is specified.
Printing limitations prevent exact replication of colors and finishes. See your Andersen supplier for actual color and finish samples.
Dimensions in parentheses are in millimeters.

SHAPES

Woodwright® double-hung windows are available in the following shapes.


Double-Hung


Springline™ Single-Hung


Arch Double-Hung


Unequal Leg Arch Double-Hung

SASH OPTIONS*


Cottage


Reverse Cottage

PERFORMANCE OPTIONS

Performance Grade (PG) Upgrades

PG upgrades are available for select sizes of standard non-impact Woodwright windows, allowing these units to achieve higher performance ratings. PG ratings are more comprehensive than Design Pressure (DP) ratings for measuring product performance. For up-to-date performance information of individual products, visit **andersenwindows.com**. Use of this option will subtract 5/8" (16) from the clear opening height. Contact your Andersen supplier for availability.

ACCESSORIES Sold Separately

FRAME

Extension Jambs



The base jamb depth is 4 1/2" (114). Extension jambs are available in unfinished pine, maple and oak or prefinished white. Some sizes may be veneered.

Factory-applied and non-applied extension jambs are available in 1/16" (1.5) increments between 5 1/4" (133) and 7 1/8" (181). Extension jambs can be factory applied to either three sides (stool and apron) or four sides (picture frame casing).

Pine Stool



A clear pine stool is available and ready for finishing. The stool is available in 4 9/16" (116) for use in wall depths up to 5 1/4" (133), and in 6 9/16" (167) for use in wall depths up to 7 1/8" (181). Works with 2 1/4" (57) and 2 1/2" (64) casing widths. Shown above on a 400 Series tilt-wash double-hung window.

HARDWARE

Window Opening Control Device



A window opening control device is available, which limits sash travel to less than 4" (102) when the window is first opened. Available factory applied, or as a field-applied kit in stone or white.

STORM/INSECT SCREEN COMBINATION UNIT**



A self-storing storm window combined with an insect screen provides greater energy efficiency, while allowing ventilation when needed. Available field applied.

The combination unit is constructed with aluminum-framed single-pane upper and lower glass panels, and a charcoal powder-coated aluminum screen mesh. Available in white, Sandtone and Terratone to match product exteriors. Canvas, dark bronze, forest green and black are available by special order.

Combination units can improve Sound Transmission Class (STC) and Outdoor Indoor Transmission Class (OITC) ratings, and are ideal for projects near airports, busy roadways and other noisy environments. For example, adding a combination unit to a 400 Series tilt-wash double-hung (size 3862) unit with Low-E4® glass will improve its STC rating from 26 to 32. Contact your Andersen supplier for additional STC and OITC rating information.

INSECT SCREENS

Insect Screen Frames



Choose full insect screen or half insect screen. The half insect screen (shown above) allows ventilation without affecting the view through the upper sash. Frames are available in colors to match product exteriors.

TruScene® Insect Screens

Our TruScene insect screens let in over 25% more fresh air† and provide 50% greater clarity than conventional Andersen® insect screens, all while keeping out unwanted small insects.

Conventional Insect Screens

Conventional insect screens have charcoal gray powder-coated aluminum screen mesh.

GRILLES

Grilles are available in a variety of configurations and widths. See page 18 for details.

EXTERIOR TRIM

Available with Andersen exterior trim. See the Exterior Trim section starting on page 177.

CAUTION: Painting and staining may cause damage to rigid vinyl. Andersen does not warrant the adhesion or performance of homeowner-applied paint over vinyl or other factory-coated surfaces. For vinyl painting instructions and preparation, contact your Andersen supplier. Do not paint weatherstrip. Creosote-based stains should not come in contact with Andersen products. Abrasive cleaners or solutions containing corrosive solvents should not be used on Andersen products. See page 223 for a complete list of cautions.

*Shown on 400 Series tilt-wash double-hung windows.

**Installed combination units may reduce the overall net clear opening. The unit clear operable area may not meet egress requirements. Consult your local building code official for egress requirements in your area.

†TruScene insect screens let in over 25% more fresh air than standard Andersen fiberglass i ns.

Dimensions in parentheses are in millimeters.

Bristol Historic District Commission

Application for Review of Proposed Work - Printable Application

HDC-25-12	Contributing	February 11, 2025

THIS DOCUMENT IS NOT A SUBSTITUTE FOR A BUILDING, ELECTRICAL, SIGN, MECHANICAL, DEMOLITION, SOLAR OR FENCE PERMIT APPLICATION. THESE PERMITS MUST BE APPLIED FOR AND APPROVED BY THE BRISTOL BUILDING DEPARTMENT BEFORE WORK CAN BEGIN.

Project Address	Assessor's Plat	Assessor's Lot
125 Hope Street	16	51

Applicant	Applicant Phone	Applicant Email
Nancy DiPrete Laurienzo	508 857-7934	nancy@NDLdesigns.com

Property Owner (If Different from Applicant)	Owner Mailing Address
	Two Stafford Court Cranston, RI 02920

Architect/Engineer	A/E Phone Number	A/E Email
Gregory J Snider, Architect	401 421-3130	gs@sniderarchitects.com

Contractor	Contractor Phone Number	Contractor Email
Butera Builder	401 245-9577	Buterabuilder.com

Work Category:	New Structure(s)

Description of proposed work:
We would like to demo the existing house and garage and build something new that meets Flood and Velocity codes.

Property History

Building Survey Data	
RIHPHC ID #:	BRIS00604
HISTORIC NAME:	Herreshoff, A. Sidney, House
ARCH. STYLE:	Early 20th c.
ORIGINAL CONSTRUCTION DATE (est.):	1940 ca
ALTERATIONS TO MAJOR ARCH. SINCE 1978 (Height, Massing, Wall Covering, Trim, Windows. Porches)	
[none observed]	

Nancy DiPrete Laurienzo
Applicant's Name – Printed
Date: February 11, 2025

Nancy DiPrete Laurienzo
Applicant's Digital Signature

Bristol Historic District Commission

Application for Review of Proposed Work - Printable Application

HDC-26-54		April 17, 2026

THIS DOCUMENT IS NOT A SUBSTITUTE FOR A BUILDING, ELECTRICAL, SIGN, MECHANICAL, DEMOLITION, SOLAR OR FENCE PERMIT APPLICATION. THESE PERMITS MUST BE APPLIED FOR AND APPROVED BY THE BRISTOL BUILDING DEPARTMENT BEFORE WORK CAN BEGIN.

Project Address	Assessor's Plat/Lot
244 METACOM AVE , BRISTOL, RI, 02809	160-0017-000

Applicant	Architect/Engineer	Contractor
Andrew Broten	JPS Construction and Design	JPS Construction and Design

Property Owner (If Different from Applicant)	Owner Mailing Address (If different than Project Address)

Work Category:	Sign(s)/Landscaping

Description of proposed work:

This application reflects minor updates to the previous approved application. The new scope includes the following:

- Extended hardscaping north of the pool house for a cooking space. There will be no built-in kitchen/ appliances, only the client's existing freestanding, typical rolling grill and smoker.
- A stained wood pergola over this cooking area.
- A bocce court, which is located directly south of the existing stone wall.
- A freestanding hot tub adjacent to the house, west of the pool
- The pool house outdoor seating area (under cover via the pool house roof) has been extended by 2 ft. The pool house footprint (interior space) has not changed, nor has it been extended. To accommodate the extra 2 ft of outdoor seating width, the pool has been shifted closer to the hous and the originally proposed setback from the pool house to the lot line remains unchanged.
- The existing front porch wraps around the southeast side of the house, and a new stair has been added for access to the rear yard and new pool.
- The applicant requests a continued discussion on whether the old diary building can be demolished

Property History

Building Survey Data	
RIHPHC ID #:	
HISTORIC NAME:	
ARCH. STYLE:	
ORIGINAL CONSTRUCTION DATE (est.):	

ALTERATIONS TO MAJOR ARCH. SINCE 1978 (Height, Massing, Wall Covering, Trim, Windows. Porches)

Sue Horwitz
Applicant's Digital Signature
Date: April 17, 2026

CAI Property Card

Town of Bristol, RI

GENERAL PROPERTY INFORMATION

LOCATION: 244 METACOM AVE
ACRES: 4.111
PARCEL ID: 160-0017-000
LAND USE CODE: 27
CONDO COMPLEX:
OWNER: BROTEN, ANDREW JAMES &
CO - OWNER: NICOLE, ANNIE ELIZABETH TE
MAILING ADDRESS: 244 METACOM AVE

ZONING: PUD
PATRIOT ACCOUNT #: 9097

SALE INFORMATION

SALE DATE: 11/24/2021
BOOK & PAGE: 2146-70
SALE PRICE: 1,485,000
SALE DESCRIPTION:
SELLER: BYRNES, MICHAEL T.

PRINCIPAL BUILDING AREAS

GROSS BUILDING AREA: 9676
FINISHED BUILDING AREA: 6091
BASEMENT AREA: 2042
 # OF PRINCIPAL BUILDINGS: 2

ASSESSED VALUES

LAND: $233,400
YARD: $23,100
BUILDING: $1,068,200
TOTAL: $1,324,700

BUILDING EXTERIOR

BUILDING STYLE: Colonial
UNITS: 1
YEAR BUILT: 1811
FRAME: Wood Frame
EXTERIOR WALL COVER: Clapboard
ROOF STYLE: Hip
ROOF COVER: Asphalt Shin

BUILDING INTERIOR

INTERIOR WALL: Plaster
FLOOR COVER: Wood Joist
HEAT TYPE: Reg A/C
FUEL TYPE: Oil
PERCENT A/C: True
 # OF ROOMS: 11
 # OF BEDROOMS: 5
 # OF FULL BATHS: 3
 # OF HALF BATHS: 0
 # OF ADDITIONAL FIXTURES: 3
 # OF KITCHENS: 1
 # OF FIREPLACES: 5
 # OF METAL FIREPLACES: 0
 # OF BASEMENT GARAGES: 0

SKETCH

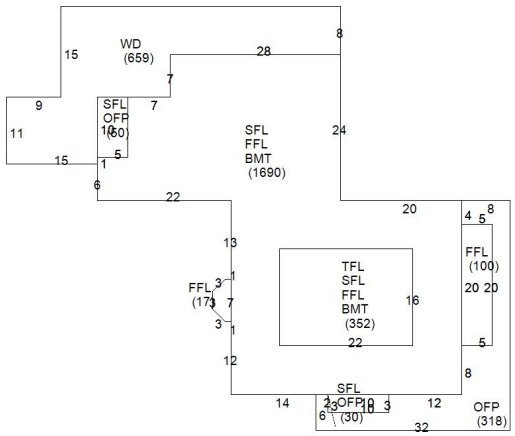

PHOTO





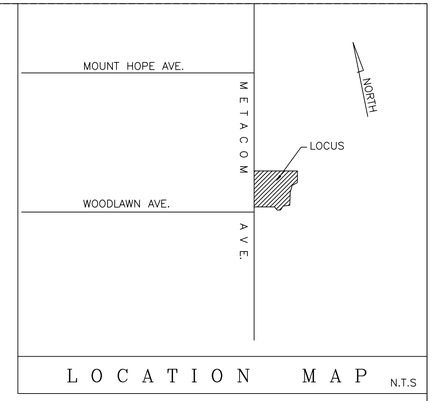

L E G E N D

I.R. IRON ROD
E.O.P EDGE OF PAVEMENT
P/L PROPERTY LINE
PS PROPOSED SEWER LINE
IRON ROD SET
S.M.H SEWER MANHOLE
61+00 SPOT GRADES
61----- CONTOURS
EXISTING STONEWALL

Z O N I N G

P.U.D. * (WITH CONDITIONS.)

N O T E S

1. THIS PROPERTY IS IN FLOOD ZONE "X" MAP 44001C0014G 11/16/2006
2. EXISTING GARAGE IS SERVICED BY PUBLIC WATER.
3. THE LAND SHOWN HEREON IS SUBJECT TO ANY EASEMENTS, RIGHT OF WAYS, RESTRICTIONS OR OTHER LIMITATIONS WHICH MAY BE REVEALED BY A FULL EXAM. OF TITLE.
4. THW UTILITIES SHOWN HEREON ARE LOCATED FROM THE BEST AVAILABLE EVIDENCE AND THE SURVEYOR DOES NOT GUARANTEE THE EXACT LOCATION OF ANY UNDERGROUND UTITLITES SERVICING THE PROPERTY.

PLAT REFERENCE

PLAN ENTITLED "BRISTOL LANDING CONDOMINIUMS " CONVEYANCE PLAN AP 160B LOTS 1 & 17 REVISED JULY 20, 2000 BY: NORTHEAST ENGINEERS AND CONSULTANTS, INC.

CERTIFICATION

THIS SURVEY HAS BEEN CONDUCTED & THE PLAN HAS BEEN PREPARED PURSUANT TO 435-RICR-00-00-1.9 OF THE RULES & REGULATIONS ADOPTED BY THE RHODE ISLAND STATE BOARD OF REGISTRATION FOR PROFESSIONAL LAND SURVEYORSON NOVEMBER 25, 2015 AS FOLLOWS:

TYPE OF BOUNDARY SURVEY	MEASUREMENT SPECIFICATION
COMPREHENSIVE BOUNDARY SURVEY	CLASS 1 STANDARD
TOPOGRAPHICAL SURVEY	CLASS III STANDARD
OTHER TYPE OF SURVEY	
DATA ACCUMULATION	III

THE PURPOSE FOR THE CONDUCT AND FOR THE PREPARATION OF THE PLAN IS AS FOLLLOWS: TO SHOW THE EXISTING CONDITIONS OF THE PROPERTY AROUND THE EXISTING HOUSE WITH TOPOGRAPHICAL SURVEY

BY: JOHN J. BARKER, JR. PLS#1885 COA#LS-A302

JOHN J. BARKER, JR. No. 1885 REGISTERED PROFESSIONAL LAND SURVEYOR

BARKER LAND SURVEYING

S I T E P L A N
for
Andrew James Broten

244 METACOM AVENUE MAP 160 B LOT 17 BRISTOL R.I.

OWNER:
ANDREW JAMES BROTEN & ANNE E. NICOLE 244 METACOM AVE.
BRISTOL RHODE ISLAND 02809

DWG NO.	SCALE	DATE	DWN BY	SHEET
251102-974	1"=30'	11/19/25	JJB	1 OF 1

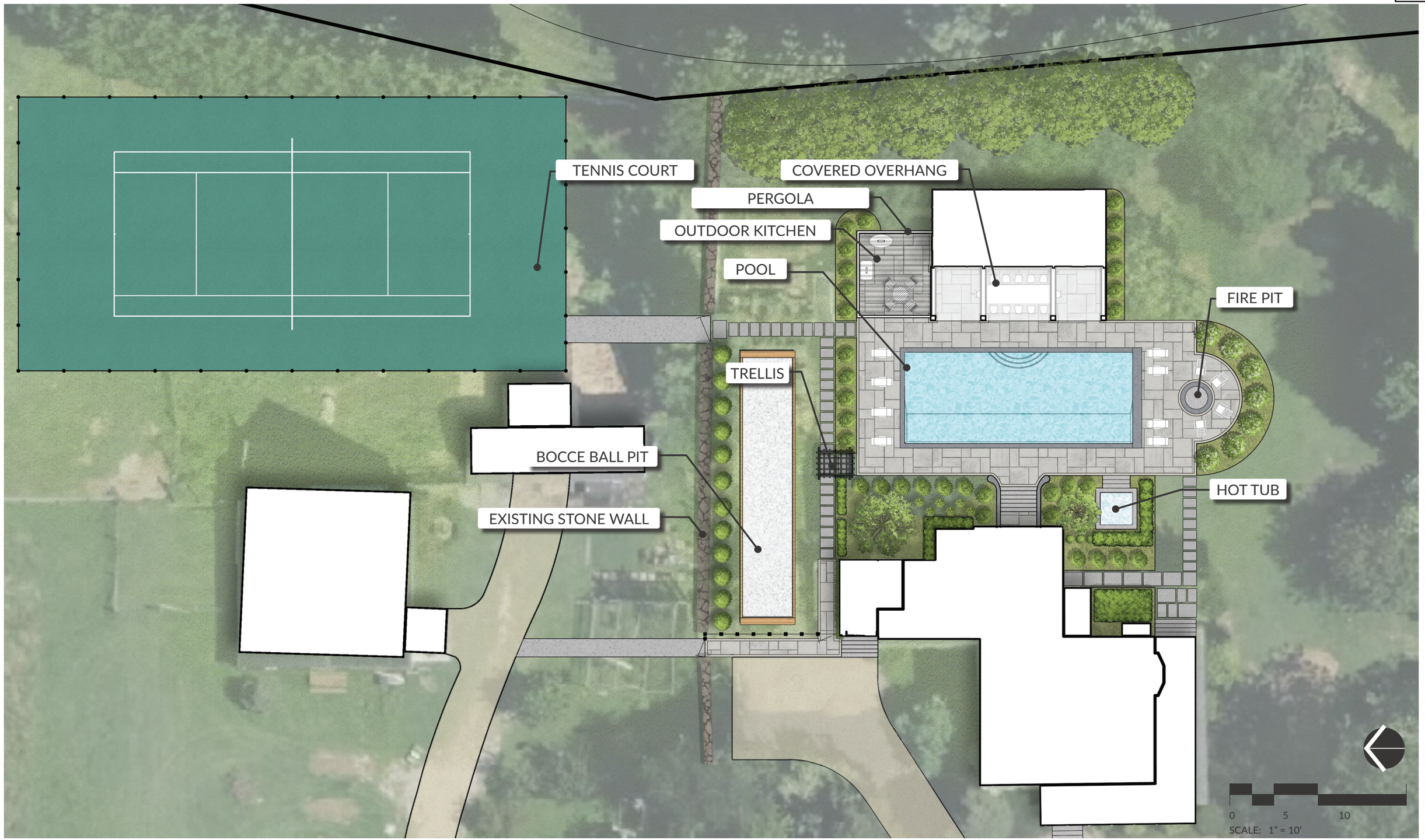

Broten Residence Rendering

244 Metacom Ave, Bristol, RI

TRAVERSE
landscape architects



JPS
CONSTRUCTION and DESIGN

88 Valley Rd.
Middletown, RI 02842

Rhode Island & Massachusetts
Licensed and Insured
Lead-Safe Certified

» Contact Us: 401-619-1260
JPS@JPSConstructionDesign.com

Bristol Historic Commission Application for 244 Metacom Avenue, Bristol

New exterior stair location on the southeast side of the existing house





Existing building - requesting permission to demolish the building due to unsafe conditions.











JPS
CONSTRUCTION and DESIGN

» Contact Us: 401-619-1260
JPS@JPSConstructionDesign.com

88 Valley Rd.
Middletown, RI 02842

Rhode Island & Massachusetts
Licensed and Insured
Lead-Safe Certified

HDC Material List

244 Metacom Ave, Bristol, RI 02809

Full project material list

Pool House, exterior material list:

- Siding - Pre-finished White Cedar Shingles
- Roofing - CertainTeed Landmark Pro Asphalt Shingles
- Cupola stone veneer - Thompson Stone (Thickness < 2")
- Composite trim - as the pool house is secondary to and detached from the existing home.

Mudroom, exterior material list:

- Siding - Pre-finished White Cedar Shingles
- Roofing - CertainTeed Landmark Pro Asphalt Shingles
- Wood trim - as the mudroom structure is attached to the existing home.
- Wood framed steps with wood trim and railing

Windows & Doors:

- Windows to be Andersen 400 Series Windows - refer to drawings for elevation and grille pattern
- Slider to be Andersen 400 Series - refer to drawings for elevation, no grille pattern
- Hinged Entry Doors to be Reeb, Douglas Fir (Painted) - refer to drawings for elevation and grille pattern

Hardscaping material list:

- Concrete pavers around the pool
- Asphalt court surfacing for the tennis court
- Oyster Shell court surfacing for the bocce area
- Crushed stone paths north of the existing stone wall
- Bluestone coping around the pool
- Concrete steps with bluestone treads on east of existing home down to pool area
- Fieldstone veneer around concrete & bluestone steps. See example image below.



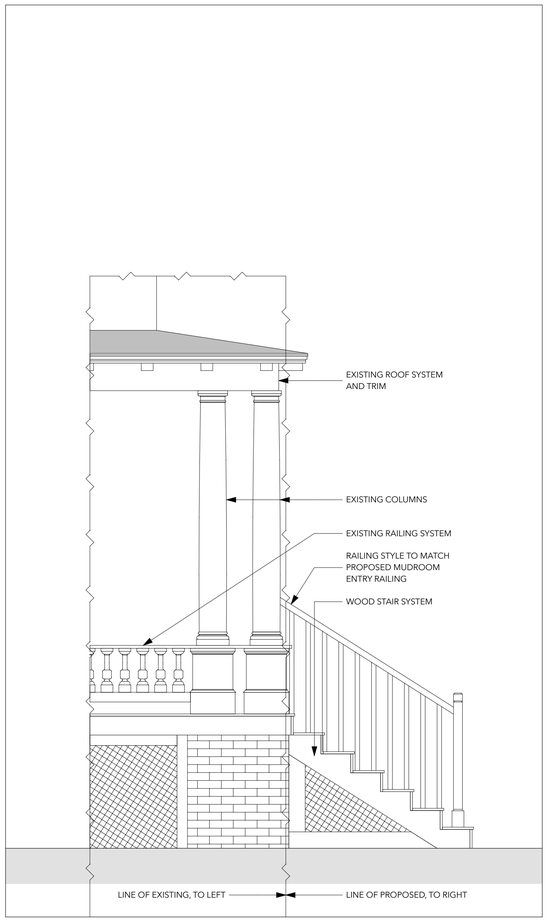

1 A2.6 SOUTH ELEVATION - REAR YARD PORCH STAIRS

SCALE: 1/2" = 1'-0"

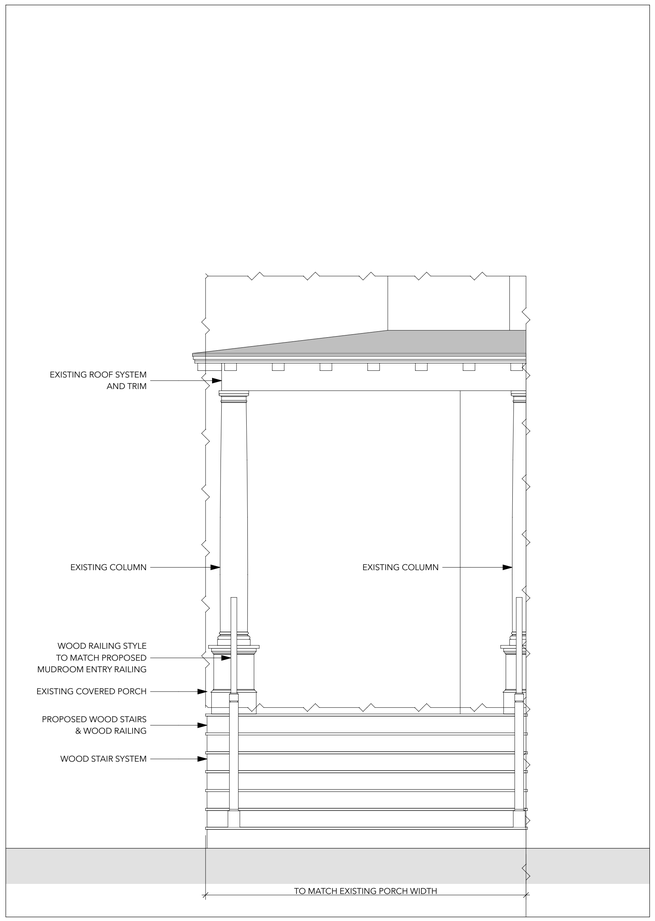

2 A2.6 EAST ELEVATION - REAR YARD PORCH STAIRS

SCALE: 1/2" = 1'-0"

DESIGN BY:

JPS
Construction and Design

88 Valley Road
Middletown, RI 02842

jps@jpsconstructiondesign.com
www.jpsconstdesign.com

PROJECT:

BROTEN POOL HOUSE

244 METACOM AVE, BRISTOL, RI 02809

REVISIONS:

NO.	DATE	DESCRIPTION

NOTES:

ISSUE:
05.11.2026
FOR REVIEW

PROJECT PHASE:
CONSTRUCTION DOCUMENTS

SHEET TITLE:
EXTERIOR ELEVATIONS

DESIGNED BY: SH/ LMV	SHEET NUMBER: A2.6
DRAWN BY: LMV/ AC	
CHECKED BY: SH/ LMV	
PROJECT NUMBER: 25211.01	SHEET 17 OF 34

Nick Toth

From: Susan Church <
Sent: Sunday, May 10, 2026 3:49 PM
To: Nick Toth
Subject: Fwd: Weetamoe's historic preservation

Caution: This email originated from outside of the organization. Do not click links or open attachments unless you recognize the sender and know the content is safe. When in doubt, contact your IT Department

Sue C.

Begin forwarded message:

From: Dewolf Fulton <
Date: May 10, 2026 at 8:07:01 AM EDT
To: Mary Millard < m>, Susan Church <
Catherine Zipf < Linden Place
Cc: Christy Nadalin < >, "Marie (Mike) Byrnes"

Subject: Weetamoe's historic preservation

Good morning...
Marie Byrnes has made me aware that the old stone dairy or ice house at Weetamoe, her previous home at 244 Metacom now owned by the Richard Broten family, is under petition to be demolished in order to build a pool.

I join Marie and others who oppose this petition, and I request that the Historic District Commission deny it. The photo below, taken by my great-grandpa Herbert Marshall Howe shows the stonework in the late 1800s. The Byrnes family has since fortified the structure when they lived there. It's in good shape.

Certainly there must be another location on the Weetamoe property for a swimming pool that would not require demolition of this historic structure. Thank you for your consideration.
Respectfully,
DeWolf Fulton



Alfred R. Allen. R. H. Howe, jr. Bessie Allen, jr.
By the dairy, Wee-ta-moe.

Nick Toth

From: Marie Byrnes <
Sent: Saturday, May 9, 2026 11:19 PM
To: Nick Toth
Subject: Question Regarding Historic Protection

Caution: This email originated from outside of the organization. Do not click links or open attachments unless you recognize the sender and know the content is safe. When in doubt, contact your IT Department

Dear Diane and Nick,

I am reaching out to express a serious concern regarding my former property located at 244 Metacom Avenue. I recently received an email from the new owners outlining their intentions to demolish the ice house on the property. It is my understanding that they are exploring the installation of a swimming pool in the vicinity of the ice house.

As you know, Weetamoe Farm and its dwellings are historically significant to Bristol's rich cultural history. As the Director of Community Development and Coordinator of the Historic District Commission, I wanted to inquire whether any protections are currently in place to prevent the demolition of the ice house.

Thank you for your time and attention to this matter. I look forward to hearing from you.

Sincerely,

Marie Byrnes

Bristol Historic District Commission

Application for Review of Proposed Work - Printable Application

HDC-26-84		June 12, 2026

THIS DOCUMENT IS NOT A SUBSTITUTE FOR A BUILDING, ELECTRICAL, SIGN, MECHANICAL, DEMOLITION, SOLAR OR FENCE PERMIT APPLICATION. THESE PERMITS MUST BE APPLIED FOR AND APPROVED BY THE BRISTOL BUILDING DEPARTMENT BEFORE WORK CAN BEGIN.

Project Address	Assessor's Plat/Lot
244 METACOM AVE , BRISTOL, RI, 02809	160-0017-000

Applicant	Architect/Engineer	Contractor
Andrew Broten		

Property Owner (If Different from Applicant)	Owner Mailing Address (If different than Project Address)

Work Category:	New Structure(s)

Description of proposed work:
Submitting for re-approval of HDC-25-65, after expiry of the previous approval. The project remains the same, creating a half-basketball court on a portion of the driveway. We plan to extend the driveway to create 30x60 asphalt base, and then install a co-polymer tile system on top manufactured by SnapSports. We plan to install a ball containment fence around the court, and install one LED light fixture to illuminate the court at night.

Property History

Building Survey Data	
RIHPHC ID #:	
HISTORIC NAME:	
ARCH. STYLE:	
ORIGINAL CONSTRUCTION DATE (est.):	
ALTERATIONS TO MAJOR ARCH. SINCE 1978 (Height, Massing, Wall Covering, Trim, Windows. Porches)	

Andrew James Broten
Applicant's Digital Signature
Date: June 12, 2026

CAI Property Card

Town of Bristol, RI

GENERAL PROPERTY INFORMATION

LOCATION: 244 METACOM AVE
ACRES: 4.111
PARCEL ID: 160-0017-000
LAND USE CODE: 27
CONDO COMPLEX:
OWNER: BROTEN, ANDREW JAMES &
CO - OWNER: NICOLE, ANNIE ELIZABETH TE
MAILING ADDRESS: 244 METACOM AVE

ZONING: PUD
PATRIOT ACCOUNT #: 9097

SALE INFORMATION

SALE DATE: 11/24/2021
BOOK & PAGE: 2146-70
SALE PRICE: 1,485,000
SALE DESCRIPTION:
SELLER: BYRNES, MICHAEL T.

PRINCIPAL BUILDING AREAS

GROSS BUILDING AREA: 9676
FINISHED BUILDING AREA: 6091
BASEMENT AREA: 2042
 # OF PRINCIPAL BUILDINGS: 2

ASSESSED VALUES

LAND: $233,400
YARD: $23,100
BUILDING: $1,068,200
TOTAL: $1,324,700

BUILDING EXTERIOR

BUILDING STYLE: Colonial
UNITS: 1
YEAR BUILT: 1811
FRAME: Wood Frame
EXTERIOR WALL COVER: Clapboard
ROOF STYLE: Hip
ROOF COVER: Asphalt Shin

BUILDING INTERIOR

INTERIOR WALL: Plaster
FLOOR COVER: Wood Joist
HEAT TYPE: Reg A/C
FUEL TYPE: Oil
PERCENT A/C: True
 # OF ROOMS: 11
 # OF BEDROOMS: 5
 # OF FULL BATHS: 3
 # OF HALF BATHS: 0
 # OF ADDITIONAL FIXTURES: 3
 # OF KITCHENS: 1
 # OF FIREPLACES: 5
 # OF METAL FIREPLACES: 0
 # OF BASEMENT GARAGES: 0

SKETCH

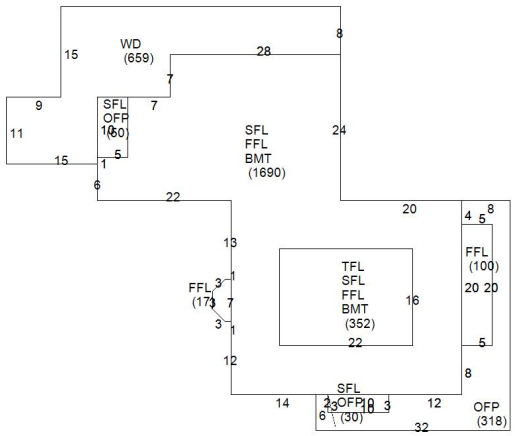

PHOTO



CAI Technologies
Precision Mapping Geospatial Solutions
www.cai-tech.com
This information is believed to be correct but is subject to change and is not warranteed.

LED COURT LIGHT

Specifications

SnapSports® Multi-Sport LED Light System

SYSTEM OPTIONS:
- LED 120-Watt Light
- LED 240-Watt Light

ELECTRICAL REQUIREMENTS:
- **Input Voltage Universal:**
  (LED 120-Watt Fixtures–Amps based on single fixture)
  - 120V Amps: 0.99
  - 208V Amps: 0.57
  - 240V Amps: 0.49
  - 277V Amps: 0.42
- **Input Voltage Universal:**
  (LED 240-Watt Fixtures–Amps based on single fixture)
  - 120V Amps: 2.00
  - 208V Amps: 1.15
  - 240V Amps: 1.00
  - 277V Amps: 0.86

  Determining required Amps:
  Device Watts ÷ Volt Circuit = Required Amps

FIXTURE ATTRIBUTES:
- LED 120-Watt Fixture:
  - Size: 12 ¼" W x 17 ¼" L x 2 ¾" H
  - Color: Black Powder Coat Finish
  - Adjust: 360˚ Swivel, 180˚ Pivot
- LED 240-Watt Fixture:
  - Size: 12 ¾" W x 23" L x 3" H
  - Color: Black Powder Coat Finish
  - Adjust: 360˚ Swivel, 180˚ Pivot

SYSTEM SIZE:
- Lower Pole: 3 ½" x 3 ½" x 10' 6" Steel Square Pole
- Upper Pole: 3 ½" x 3 ½" x 7' Steel Square Pole
- Total System Height: 17' 6" From Ground To Top Of Fixture

COLOR:
- Semi-Gloss Black Vein Powder Coat Finish

NET ADJUSTMENT LOCATIONS:
- Paddle Tennis: 36"
- Badminton: 62"
- Women's Volleyball: 88"
- Men's Volleyball: 96"

ANCHOR SYSTEM:
- Patent Pending: 3" x 3" x 42" Internal Support Post

OPTIONAL ACCESSORIES:
- Multi-Sport Net Adjustment System



120-Watt *240-Watt*

SNAPSPORTS®
ATHLETIC SURFACES

1-800-664-3865 | www.snapsports.com
2330 California Ave[illegible]ake City, UT 84104

© 2020 SnapSports

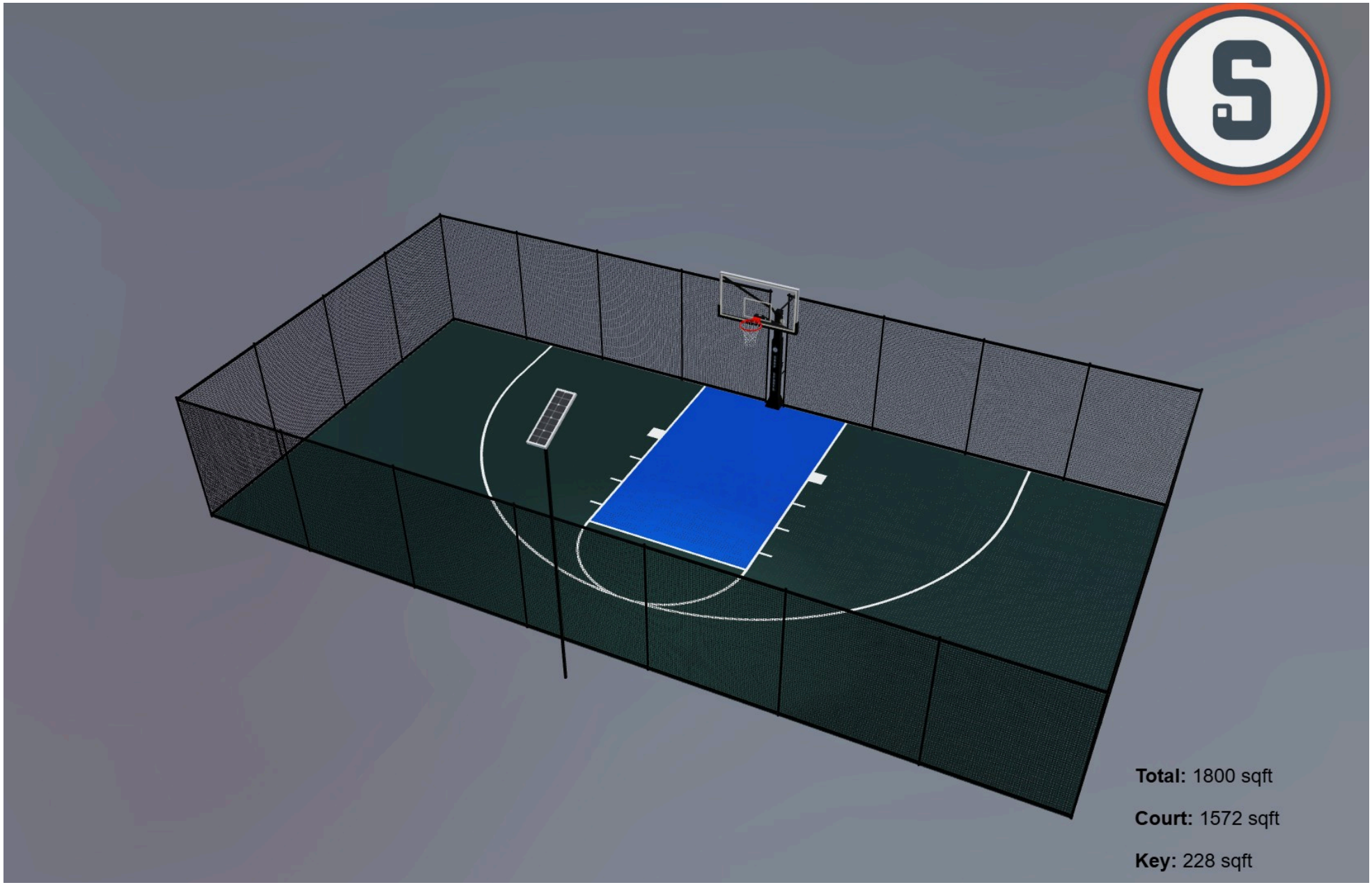
Total: 1800 sqft
Court: 1572 sqft
Key: 228 sqft

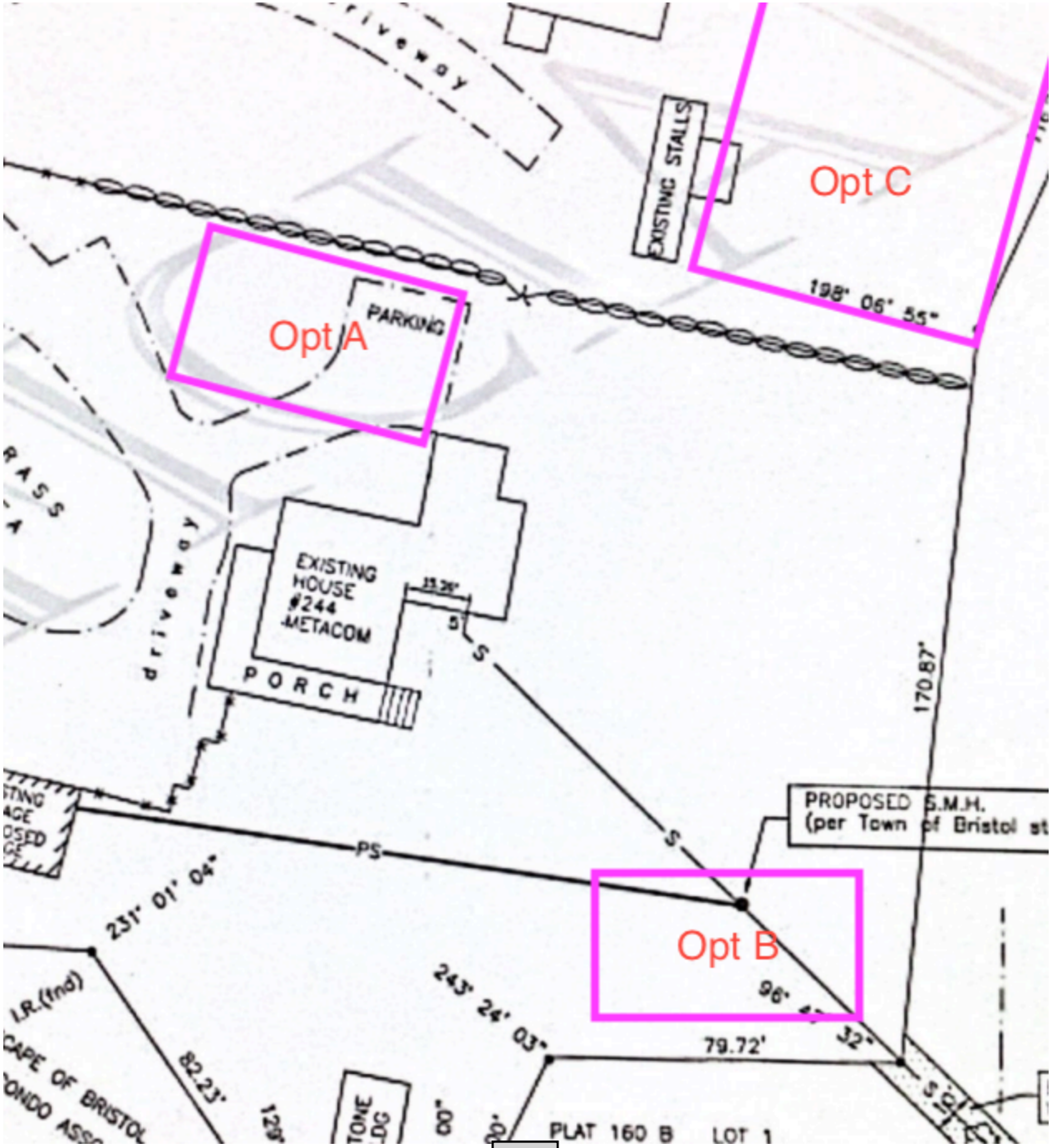
Opt A
Opt B
Opt C
EXISTING STALLS
PARKING
EXISTING HOUSE #244 METACOM
PORCH
driveway
PROPOSED S.M.H.
(per Town of Bristol st
198° 06' 55"
170.87'
231° 01' 04"
243° 24' 03"
79.72'
82.23'
PLAT 160 B
LOT 1



Bristol Historic District Commission

Application for Review of Proposed Work - Printable Application

HDC-26-33	Contributing	March 13, 2026

THIS DOCUMENT IS NOT A SUBSTITUTE FOR A BUILDING, ELECTRICAL, SIGN, MECHANICAL, DEMOLITION, SOLAR OR FENCE PERMIT APPLICATION. THESE PERMITS MUST BE APPLIED FOR AND APPROVED BY THE BRISTOL BUILDING DEPARTMENT BEFORE WORK CAN BEGIN.

Project Address	Assessor's Plat/Lot
145 HIGH ST , BRISTOL, RI, 02809	015-0021-000

Applicant	Architect/Engineer	Contractor
Danny Ferreira	DAVID SISSON	

Property Owner (If Different from Applicant)	Owner Mailing Address (If different than Project Address)
	204 Poppasquash Rd Bristol, RI 02809

Work Category:	Addition to Structure(s)

Description of proposed work:
REMODEL OF EXISTING HOME. ADDITION OF THREE TOWNHOMES. RENOVATION OF EXISTING GARAGE

Property History

Building Survey Data	
RIHPHC ID #:	BRIS00149
HISTORIC NAME:	
ARCH. STYLE:	Greek Revival
ORIGINAL CONSTRUCTION DATE (est.):	1845 ca
ALTERATIONS TO MAJOR ARCH. SINCE 1978 (Height, Massing, Wall Covering, Trim, Windows. Porches)	

DAVID SISSON
Applicant's Digital Signature
Date: March 13, 2026

CAI Property Card

Town of Bristol, RI

GENERAL PROPERTY INFORMATION

LOCATION: 145 HIGH ST
ACRES: 0.5223
PARCEL ID: 015-0021-000
LAND USE CODE: 01
CONDO COMPLEX:
OWNER: FWP HIGH STREET LLC
CO - OWNER:
MAILING ADDRESS: P.O. BOX 333

ZONING: R-6
PATRIOT ACCOUNT #: 930

SALE INFORMATION

SALE DATE: 2/6/2026
BOOK & PAGE: 2311-1
SALE PRICE: 435,000
SALE DESCRIPTION:
SELLER: SOUSA, JULIANN EXECUTRIX OF

PRINCIPAL BUILDING AREAS

GROSS BUILDING AREA: 2942
FINISHED BUILDING AREA: 1440
BASEMENT AREA: 1164
 # OF PRINCIPAL BUILDINGS: 1

ASSESSED VALUES

LAND: $275,700
YARD: $0
BUILDING: $218,200
TOTAL: $493,900

BUILDING EXTERIOR

BUILDING STYLE: Restored His
UNITS: 1
YEAR BUILT: 1820
FRAME: Wood Frame
EXTERIOR WALL COVER: Clapboard
ROOF STYLE: Gable
ROOF COVER: Asphalt Shin

BUILDING INTERIOR

INTERIOR WALL: Drywall
FLOOR COVER: Hardwood
HEAT TYPE: Radiant Hot
FUEL TYPE: Oil
PERCENT A/C: False
 # OF ROOMS: 7
 # OF BEDROOMS: 3
 # OF FULL BATHS: 2
 # OF HALF BATHS: 0
 # OF ADDITIONAL FIXTURES: 1
 # OF KITCHENS: 1
 # OF FIREPLACES: 0
 # OF METAL FIREPLACES: 0
 # OF BASEMENT GARAGES: 0

SKETCH

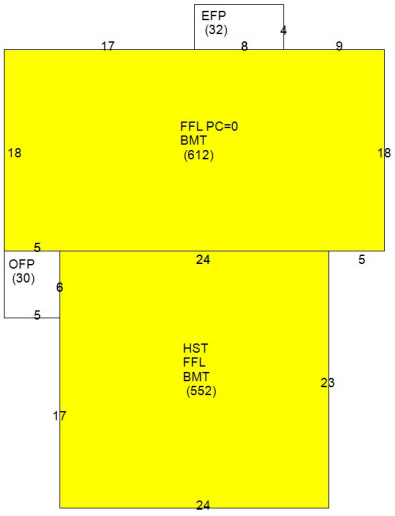

PHOTO



d a v i d s i s s o n a r c h i t e c t u r e p c

1 2 3 4 5 6 7 | | #

345 Taunton Ave East Providence RI 02914 www.ds-arch.com info@ds-arch.com tel: 401.595.7070

Project: 26022 145 High

Date: 06-12-2026

Attn.: Historic District Commission – Bristol, RI

Dear members of the Historic District Commission,

We are proposing redeveloping the site at 145 High Street. This is an existing historic single-family home, in very poor condition, with a very large (10 car) garage in the back yard, also in very poor condition.

We propose the following:

- Demolition of the existing 10 car garage (already collapsed)
- Demolition of the existing addition and deck towards the rear of the existing home (already collapsed)
- Renovation and remodel of the existing single family home
- Additions to the rear of the single family home to include a 2 car garage and guest unit above the garage (2 units proposed)

Our goals are:

- To save the existing historic home
- We intend to keep the addition to the same height at the existing single-family home. This is quite a bit shorter than what is allowed in the zone (27’ where 35’ is allowed)
- The garage will be even shorter than the existing home.
- We intend to align the addition to the existing home, keeping its mass and bulk similar to the existing home
- We intend to provide the same roofline and shape at the addition and existing home. Note that we are including adding dormers to the existing home. These dormers will be the same size and configuration as the existing dormers. .
- We intend to provide similar trim, siding, and exterior detailing at the additions and the existing home, to create a cohesive design
- We have reduced the building footprint by 906 square feet and shortened the building line by 45 feet along the property line due to removing the existing garage. We have also moved the building back from the property line by over 3’-6” by removing the existing garage and addition to the rear of the home.

If you have any questions or requests, please do not hesitate to call.

Sincerely,



David Sisson

DAVID SISSON
ARCHITECTURE

145 High Street, Bristol RI 02809
Product Summary for exterior facade work

Exterior Clapboard – Material

- **HardiePlank**® Lap Siding (0.312" in x 6.25" -in x 144 in) - primed
- Color: Painted – SW 7005 **Pure White**
- Exposure : 5"



DAVID SISSON
ARCHITECTURE

Windows – Material

- **Pella® Lifestyle Series Double-Hung Window**
- Material: Clad Wood
- Exterior color: White
- Grilles: none
- Interior color: Painted – TBD





DAVID SISSON
ARCHITECTURE

Roof Shingles – Material

- **GAF** Timberline Natural Shadow 33.3-sq ft Laminated Architectural Roof Shingles
- Color: TBD
- Item #652976
- Model #0600180



DAVID SISSON
ARCHITECTURE

Exterior Doors – Material

- **Jeld-Wen Smooth-Pro™ Fiberglass Exterior Door: 1/2 View 4-Light 1-Panel Plank**
- Color: Wood milk chocolate



DAVID SISSON
ARCHITECTURE

Garage door

CLOPAY – Coachman- Premium series

Dimensions: W 8’x H 7’0” & W 8’x H 7’4”

Model CD13

Design : Modern Grooved Panel (contemporary Windows)

Construction 4-layer 1 3/8" Polystyrene Insulation R-value 6.5

Color : Standard White

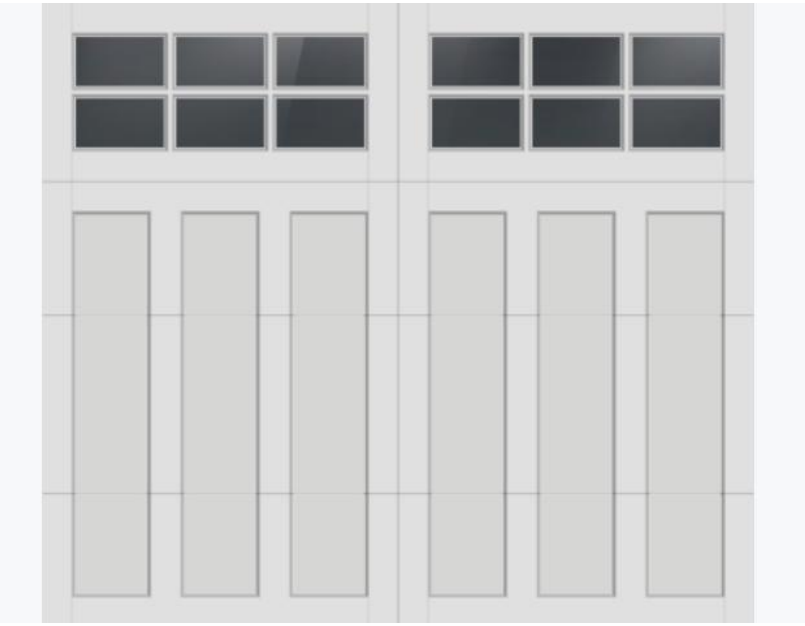

DAVID SISSON
ARCHITECTURE

Exterior flat Trim

Azek - Traditional 4/ 4-in. x 2-in. x 8-ft. PVC Smooth Trim Board

- Color: Painted – SW 7005 **Pure White**

DAVID SISSON
ARCHITECTURE

145 High Street, Bristol RI 02809
Product Summary for exterior facade work

Exterior Clapboard – Material

- **HardiePlank®** Lap Siding (0.312" in x 6.25" -in x 144 in) - primed
- Color: Painted – SW 7005 **Pure White**
- Exposure : 5"



DAVID SISSON
ARCHITECTURE

Windows – Material

- **Harvey SLIMLINE- 12-lite double-hung vinyl windows**
- Material: Vinyl
- Exterior color: White
- Grilles: 12 LITE
- Interior color: White



DAVID SISSON
ARCHITECTURE

Roof Shingles – Material

- **GAF** Timberline Natural Shadow 33.3-sq ft Laminated Architectural Roof Shingles
- Color: TBD
- Item #652976
- Model #0600180



DAVID SISSON
ARCHITECTURE

Exterior Doors – Material

- **Jeld-Wen Smooth-Pro™ Fiberglass Exterior Door: 1/2 View 4-Light 1-Panel Plank**
- Color: Wood milk chocolate



DAVID SISSON
ARCHITECTURE

Garage door

CLOPAY – Coachman- Premium series

Dimensions: W 8’x H 7’0” & W 8’x H 7’4”

Model CD13

Design : Modern Grooved Panel (contemporary Windows)

Construction 4-layer 1 3/8" Polystyrene Insulation R-value 6.5

Color : Standard White

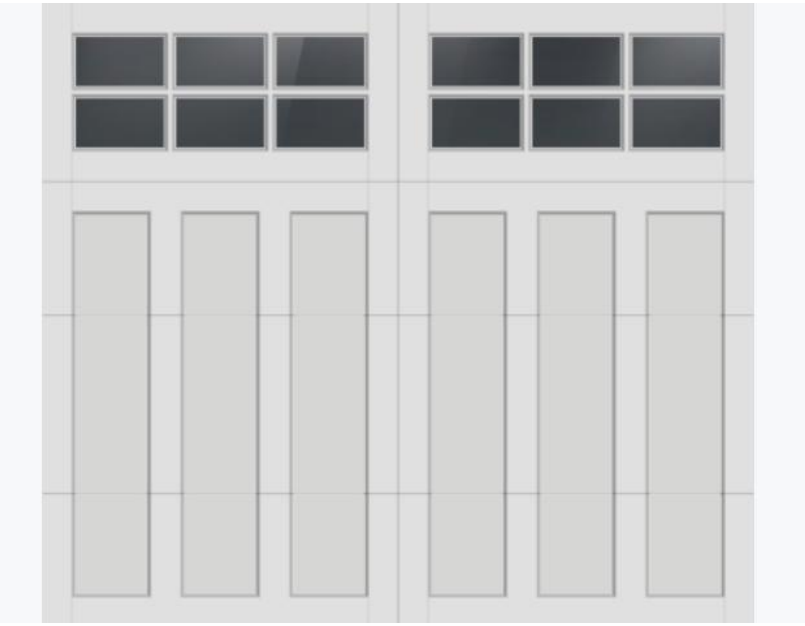

DAVID SISSON
ARCHITECTURE

Exterior flat Trim

Hardie® Trim Boards - Traditional 4.5-in. x 1.5-in. x 8-ft. Fiber cement

- Color: Painted – SW 7005 **Pure White**



DAVID SISSON
ARCHITECTURE

Gutter system

Amerimax 5-in x 120-in White Aluminum

Color: white

Style: TBD



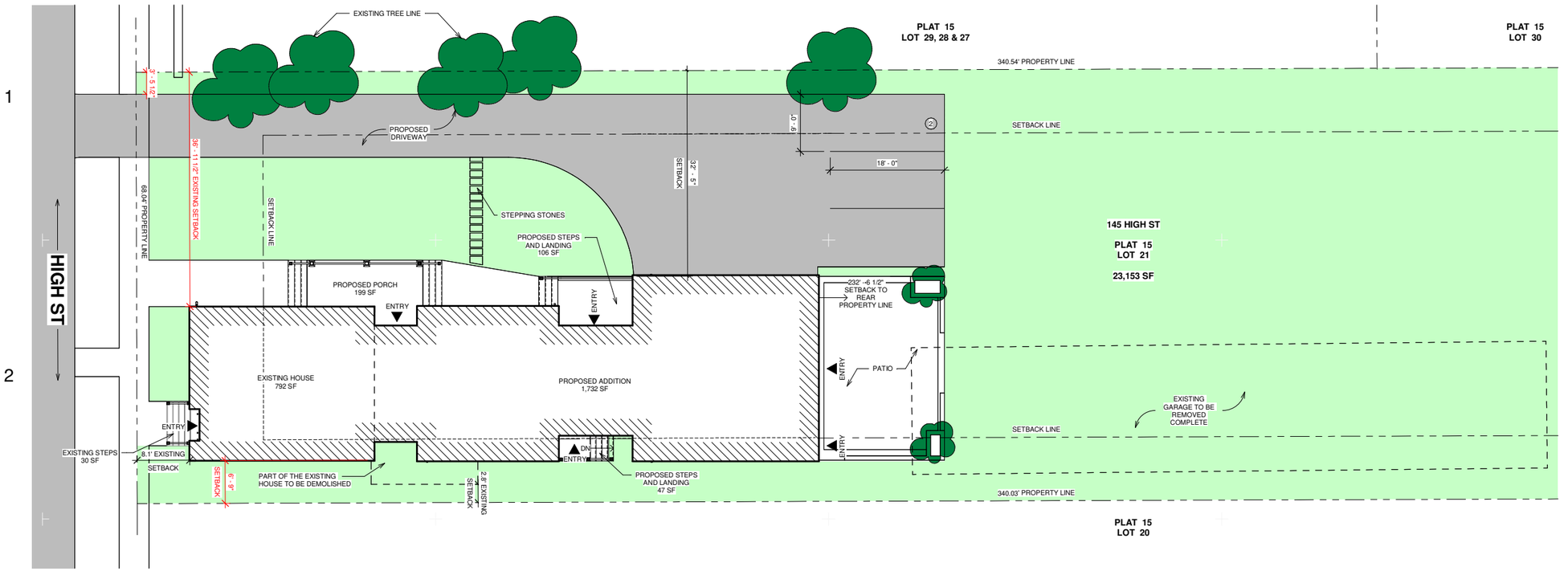

A3 SITE - PROPOSED
1/8" = 1'-0"

ZONING TABLE

ZONE = R-6

	REQUIRED	PROVIDED	RELIEF REQUESTED?
LOT AREA	6,000 SF	23,153 SF	NO
LOT AREA PER DU	6,000 1ST UNIT 4,000 EACH ADD. UNIT		
		MAX 5 UNITS (2 UNITS PROVIDED)	NO
LOT WIDTH	80'	68.04'	YES
FRONTAGE	60'	68.04'	NO
LOT COVERAGE	30% (6,945.9 SF)	16.5% (3,818 SF) EXISTING 12.0% (2,800 SF) PROPOSED	NO NO
FRONT SETBACK	20' OR AVG	8.1' EXISTING	NO EXISTING NON-CONFORMING
SIDE SETBACK	10'	36' -11 1/2" EXISTING 32' - 5" PROPOSED	NO
SIDE SETBACK	10'	2.8' EXISTING 6' - 5 1/2" PROPOSED	YES - ALIGN W/EXISTING HOME
REAR SETBACK	20'	230' - 4 1/2" EXISTING	NO
HEIGHT	35'	APPROX. 26' - 10 1/2" EXISTING 26' - 10 1/2" PROPOSED	NO NO

PARKING
REQ'D = 2 SPACE PER UNIT - 4 REQUIRED, 4 PROVIDED
10' X 18' WITH 24' AISLE

LOT COVERAGE CALCULATIONS:

EXISTING:

EXISTING HOUSE	1,280 SF
EXISTING PORCH	494 SF
EXISTING STEPS	30 SF
EXISTING STEPS	11 SF
EXISTING GARAGE	2,003 SF
TOTAL:	3,818 SF

PROPOSED:

EXISTING HOUSE	792 SF
EXISTING STEPS	30 SF
PROPOSED ADDITION	1,738 SF
PROPOSED PORCH	199 SF
PROPOSED STEPS AND LANDING	47 SF
PROPOSED STEPS AND LANDING	106 SF
TOTAL:	2,912 SF

DAVID SISSON ARCHITECTURE PC -- ALL RIGHTS RESERVED

david sisson architecture pc
345 Taunton Ave
East Providence RI 02914
www.ds-arch.com info@ds-arch.com 401-595-7070

REV #	DATE:	ISSUED FOR:
	2020-06-12	ZONING REVIEW

145 High St
Bristol RI 02809
PROJECT NUMBER: 26022

SITE PLAN

ZONING REVIEW ONLY
DATE SIGNED:
2021-08-27

A0.1

A B C D

1



2

3

4

DAVID SISSON ARCHITECTURE PC -- ALL RIGHTS RESERVED

david sisson architecture pc
345 Taunton Ave
East Providence RI 02914
www.ds-arch.com Info@ds-arch.com 401-566-7070

REV. #	DATE:	ISSUED FOR:
	2026-06-12	ZONING REVIEW

145 High St
Bristol RI 02809
PROJECT NUMBER: 26022

3D

DAVID C. SISSON
REGISTERED ARCHITECT
ZONING REVIEW ONLY
DATE SIGNED:

A10.0

david sisson architecture pc
345 Taunton Ave
East Providence RI 02914
www.ds-arch.com info@ds-arch.com 401-566-7070

REV. #	DATE:	ISSUED FOR:
	2026-06-12	ZONING REVIEW

145 High St
Bristol RI 02809
PROJECT NUMBER: 26022

3D

DAVID P. SISSON
ZONING REVIEW ONLY
NOT FOR CONSTRUCTION
ARCHITECT
DATE SIGNED:

A10.1

DAVID SISSON ARCHITECTURE PC -- ALL RIGHTS RESERVED

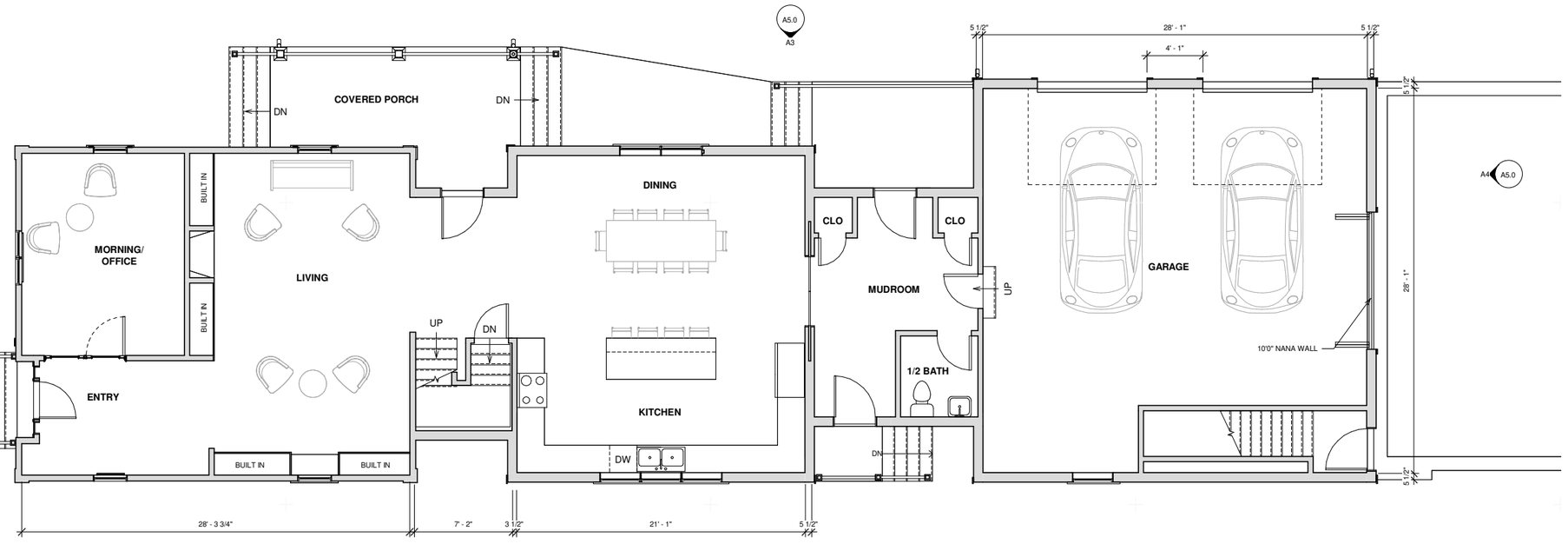

A1
A5.0

A4 FLOOR PLAN - 1ST FL
1/4" = 1'-0"

DOG WASH

DAVID SISSON ARCHITECTURE PC -- ALL RIGHTS RESERVED

david sisson architecture pc
345 Taunton Ave
East Providence RI 02914
www.ds-arch.com info@ds-arch.com 401-595-7070

REV.#	DATE:	ISSUED FOR:
	2020-06-12	ZONING REVIEW

145 High St
Bristol RI 02809
PROJECT NUMBER: 28022

PLANS 1ST FL

DAVID SISSON ZONING REVIEW ONLY RI

DATE SIGNED:
2021-08-27

A4.1

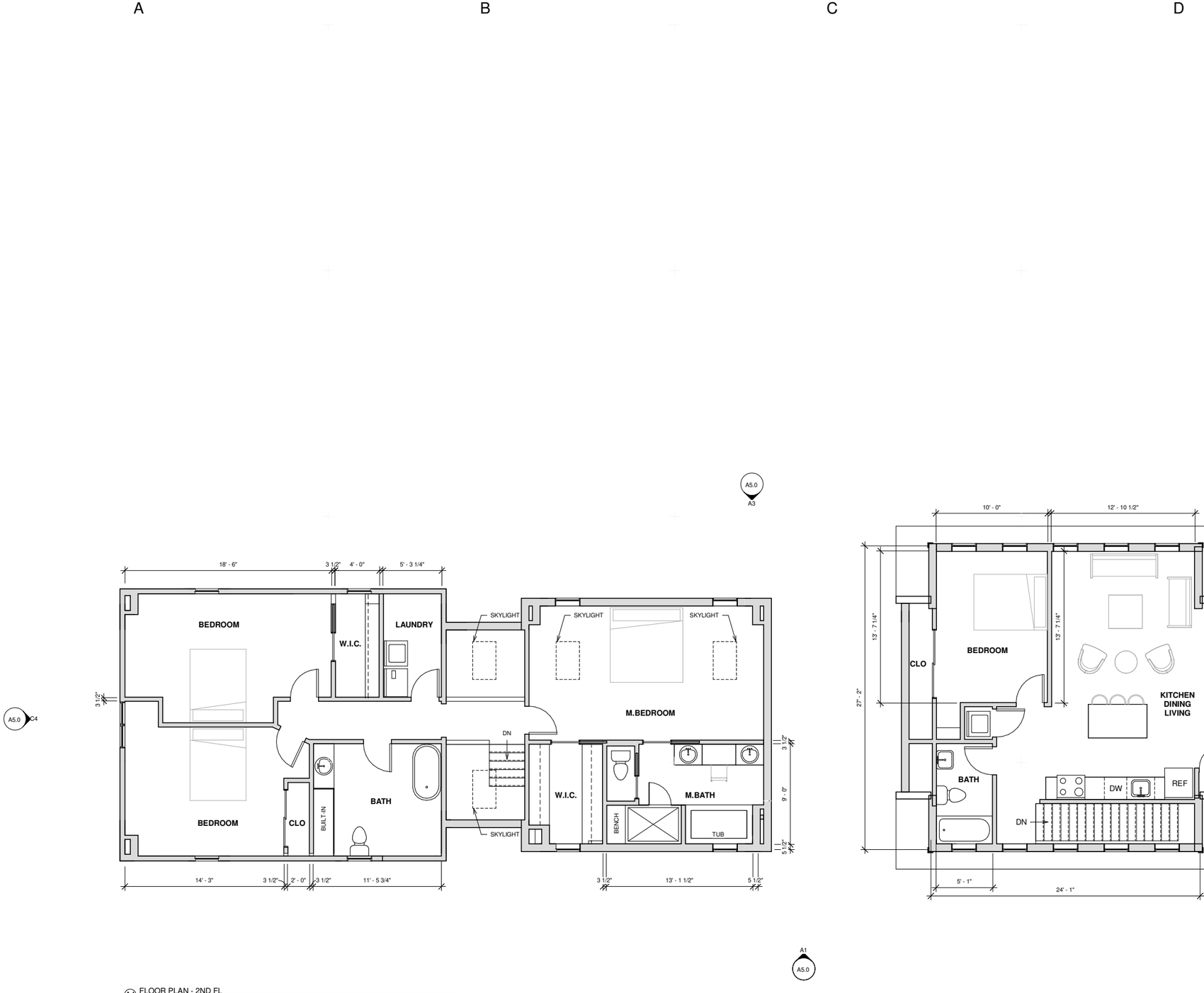

A4 FLOOR PLAN - 2ND FL
1/4" = 1'-0"

david sisson architecture pc
345 Taunton Ave
East Providence RI 02914
www.ds-arch.com info@ds-arch.com 401-595-7070

REV.#	DATE:	ISSUED FOR:
	2020-06-12	ZONING REVIEW

145 High St
Bristol RI 02809
PROJECT NUMBER: 28022

PLANS 2ND FL

ZONING REVIEW ONLY
DATE APPROVED:
2021-08-27

A4.2

DAVID SISSON ARCHITECTURE PC -- ALL RIGHTS RESERVED

A B C D

1



A1 NORTH ELEVATION
1/4" = 1'-0"

2



3

A3 SOUTH ELEVATION
1/4" = 1'-0"

4



A4 WEST ELEVATION
1/4" = 1'-0"



C4 EAST ELEVATION
1/4" = 1'-0"

david sisson architecture pc
345 Taunton Ave
East Providence RI 02914
www.ds-arch.com info@ds-arch.com 401-595-7070

REV.#	DATE:	ISSUED FOR:
	2020-06-12	ZONING REVIEW

145 High St
Bristol RI 02809
PROJECT NUMBER: 28022

ELEVATIONS

ZONING REVIEW ONLY
DATE SIGNED:
2021-08-27

A5.0

DAVID SISSON ARCHITECTURE PC -- ALL RIGHTS RESERVED


WET








HORSTMANN
Guidas Dairy






NOTICE
24 HOUR
VIDEO
SURVEILLANCE
NO
DUMPING
ALLOWED


145
Onsite
RENT-A-FENCE
Onsite
RENT-A-FENCE
NOTICE
24-HOUR
VIDEO
SURVEILLANCE




RAMO











Bristol Historic District Commission

Application for Review of Proposed Work - Printable Application

HDC-25-12	Contributing	February 11, 2025

THIS DOCUMENT IS NOT A SUBSTITUTE FOR A BUILDING, ELECTRICAL, SIGN, MECHANICAL, DEMOLITION, SOLAR OR FENCE PERMIT APPLICATION. THESE PERMITS MUST BE APPLIED FOR AND APPROVED BY THE BRISTOL BUILDING DEPARTMENT BEFORE WORK CAN BEGIN.

Project Address	Assessor's Plat	Assessor's Lot
125 Hope Street	16	51

Applicant	Applicant Phone	Applicant Email
Nancy DiPrete Laurienzo	508 857-7934	nancy@NDLdesigns.com

Property Owner (If Different from Applicant)	Owner Mailing Address
	Two Stafford Court Cranston, RI 02920

Architect/Engineer	A/E Phone Number	A/E Email
Gregory J Snider, Architect	401 421-3130	gs@sniderarchitects.com

Contractor	Contractor Phone Number	Contractor Email
Butera Builder	401 245-9577	Buterabuilder.com

Work Category:	New Structure(s)

Description of proposed work:
We would like to demo the existing house and garage and build something new that meets Flood and Velocity codes.

Property History

Building Survey Data	
RIHPHC ID #:	BRIS00604
HISTORIC NAME:	Herreshoff, A. Sidney, House
ARCH. STYLE:	Early 20th c.
ORIGINAL CONSTRUCTION DATE (est.):	1940 ca
ALTERATIONS TO MAJOR ARCH. SINCE 1978 (Height, Massing, Wall Covering, Trim, Windows. Porches)	
[none observed]	

Nancy DiPrete Laurienzo
Applicant's Name – Printed
Date: February 11, 2025

Nancy DiPrete Laurienzo
Applicant's Digital Signature

CAI Property Card

Town of Bristol, RI

GENERAL PROPERTY INFORMATION

LOCATION: 125 HOPE ST
ACRES: 0.3108
PARCEL ID: 016-0051-000
LAND USE CODE: 01
CONDO COMPLEX:
OWNER: 125 HOPE ST, LLC
CO - OWNER:
MAILING ADDRESS: 2 STAFFORD CT

ZONING: R-6
PATRIOT ACCOUNT #: 1052

SALE INFORMATION

SALE DATE: 1/8/2025
BOOK & PAGE: 2270-86
SALE PRICE: 725,000
SALE DESCRIPTION:
SELLER: HERRESHOFF, HALSEY C, TRUSTEE

PRINCIPAL BUILDING AREAS

GROSS BUILDING AREA: 3784
FINISHED BUILDING AREA: 2402
BASEMENT AREA: 1362
 # OF PRINCIPAL BUILDINGS: 1

ASSESSED VALUES

LAND: $687,600
YARD: $3,000
BUILDING: $226,600
TOTAL: $917,200

BUILDING EXTERIOR

BUILDING STYLE: Colonial
UNITS: 1
YEAR BUILT: 1930
FRAME: Wood Frame
EXTERIOR WALL COVER: Asbestos
ROOF STYLE: Hip
ROOF COVER: Asphalt Shin

BUILDING INTERIOR

INTERIOR WALL: Plaster
FLOOR COVER: Hardwood
HEAT TYPE: BB Hot Water
FUEL TYPE: Oil
PERCENT A/C: False
 # OF ROOMS: 10
 # OF BEDROOMS: 4
 # OF FULL BATHS: 3
 # OF HALF BATHS: 0
 # OF ADDITIONAL FIXTURES: 1
 # OF KITCHENS: 1
 # OF FIREPLACES: 1
 # OF METAL FIREPLACES: 0
 # OF BASEMENT GARAGES: 0

SKETCH

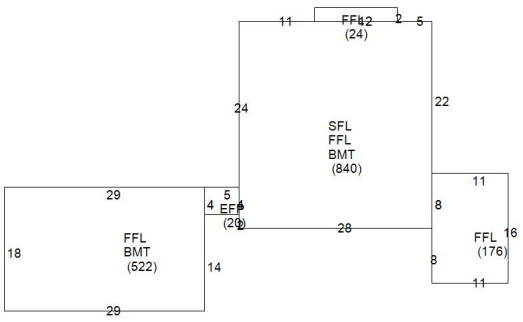

PHOTO



DiPrete Engineering

June 12, 2026

Town of Bristol Historic District Commission
10 Court Street
Bristol, Rhode Island

Re:125 Hope Street
Revised Submission Response to HDC Comments

Dear Members of the Historic District Commission:

At the June 4 meeting, the Commission provided specific feedback regarding the proposed design, particularly related to the water side elevation and the overall perception of the windows. There was also a request to provide data on the building height.

This revised submission is intended to respond directly to those comments.

Response to Commission Comments

Water Side Elevation, Windows, and Rendering
The Commission noted that the water side elevation was not represented with the same level of clarity as the street facing façade, and requested additional visualization.

In response, the submission includes:

1) a revised water side elevation,
2) a distant rendering illustrating the building and windows in context,
3) a closer range rendering to better convey the façade and window composition.

Window Composition and Architectural Character
The Commission also expressed concern that the windows on the water side elevation appeared too vertical and not fully aligned with the historic character of the existing structure.

The elevation has been revised to strengthen the horizontal expression of the façade, with adjustments to window grouping and alignment intended to better reflect the International Style character of the original house, including an emphasis on horizontal fenestration patterns and simplified geometric composition. This includes shortening the height of the proposed windows, reducing the size of the windows, and reassessing the proposed design (especially the horizontal alignment) to more in keeping with the existing house and international style.

Height Clarification
The Commission requested additional clarity regarding the relationship between the height of the proposed structure and the existing house.

1) We are eliminating the lower level (basement) in the proposed home and all the heights below are from the new first floor grade.
2) We are raising the proposed first floor to be about 2 feet higher than the existing first floor.
3) The floor systems will be about 4" thicker (about 10" to about 14").
4) The height of the first floor to the roof soffit is proposed at 20'8" and is 16'2" today
5) The height of the roof soffit to the peak is proposed at 10' 4" and is 7' today.
6) The difference in height between the model house and main house is 2'6" today and is designed to be the same in the proposed condition. (This was an important design element to maintain the historically informed reconstruction resemblance to the current house.)
7) The elevation of the peak of the proposed house will be approximately 47.5 msl. The existing is between 37 and 38 msl.

The design has been developed to manage the appearance of the proposed home through building placement and massing, with the intent of reducing perceived height from both the street and the water while maintaining proportions consistent with the existing structure.

This submission reflects targeted refinements in response to the Commission's comments, while maintaining the overall design approach previously reviewed.

We respectfully request that the Commission continue its consideration of the application.

Sincerely,



Dennis DiPrete, Principal
DiPrete Engineering

BOSTON PROVIDENCE NEWPORT | Two Staffo[illegible] Cranston, Rhode Island 02920 | 401-943-1000
www.diprete-eng.com

125 HOPE STREET - EXISTING



125 HOPE STREET - PROPOSED



125 HOPE STREET - EXISTING



125 HOPE STREET - PROPOSED



125 HOPE STREET - EXISTING



125 HOPE STREET - PROPOSED



125 HOPE STREET-PROPOSED, CLOSE UP VIEW

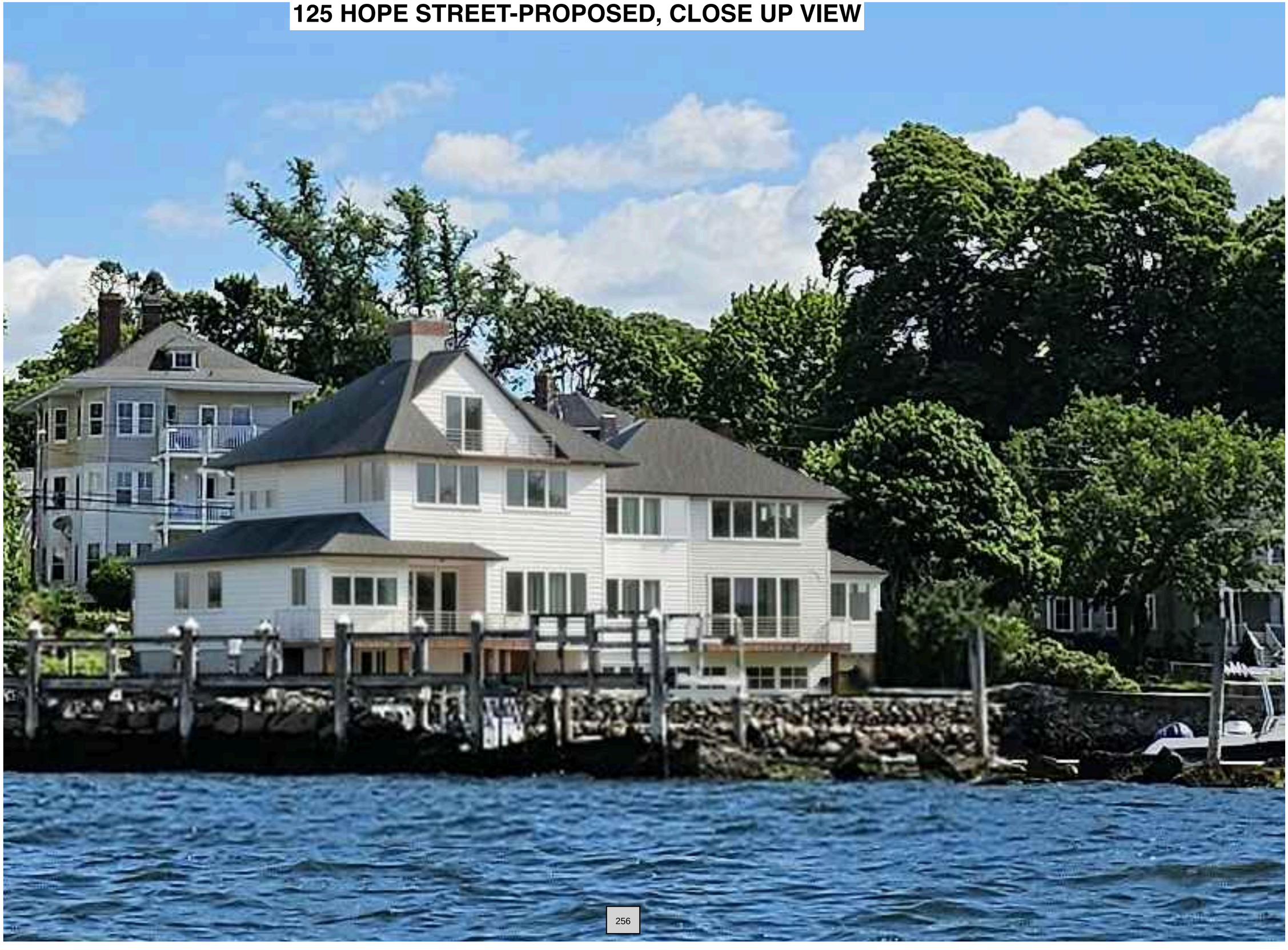

125 HOPE STREET - EXISTING









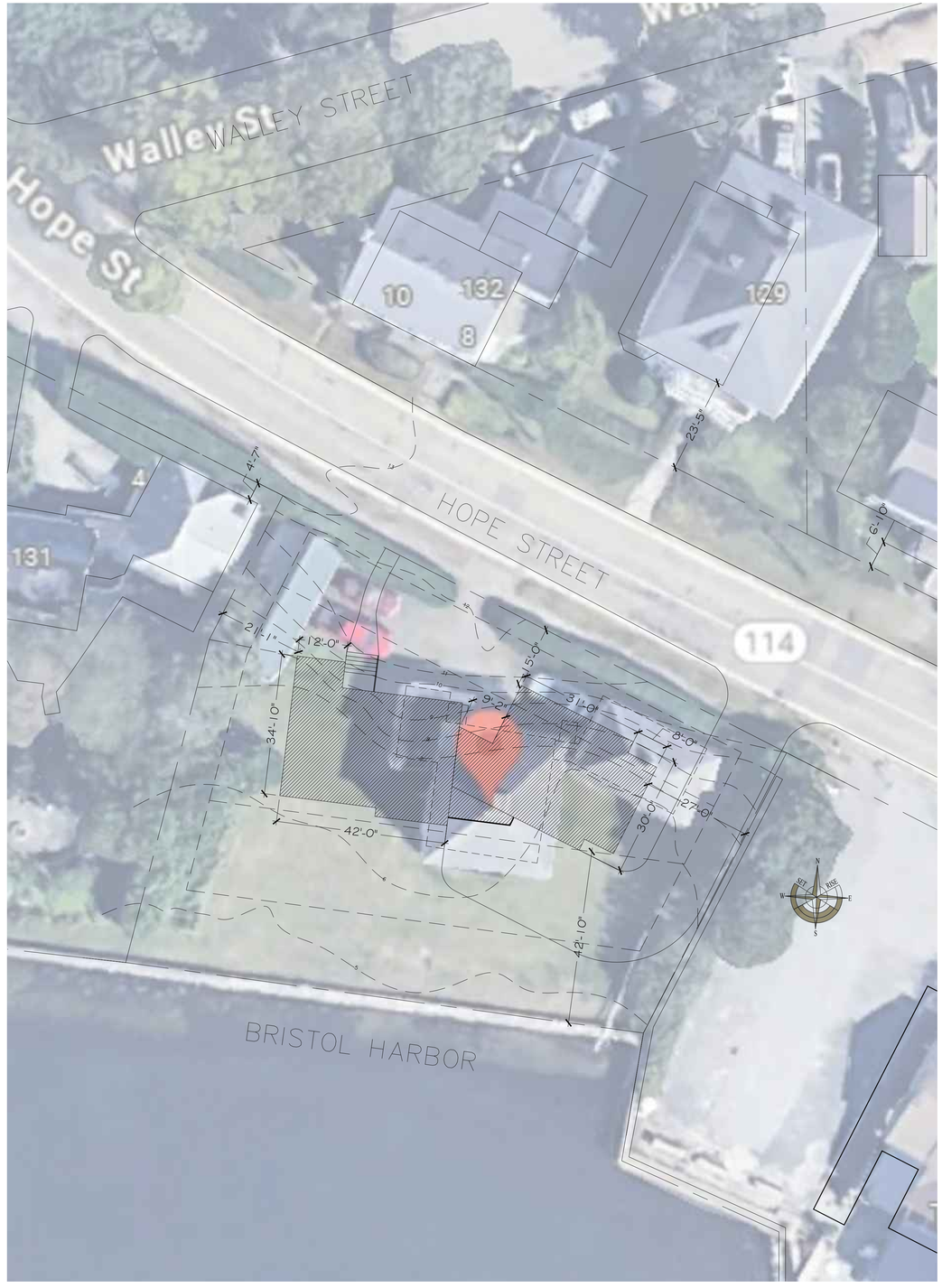

1 / A0.0 PROPOSED SITE PLAN
SCALE: 1/16" = 1'-0"

MELCHERT ARCHITECTURE
2 ARTHUR AVE. BRISTOL RI
MADELINE@MELCHERTARCHITECTURE.COM
518-524-4925

125 HOPE STREET
BRISTOL RI 02809

TITLE:
DWG CONTENTS: SITE PLAN

PHASE:	DATE:
HDC	4.8.26
DWN BY:	CHKD BY:
MM	-

REVISIONS:
1 -
2 -
3 -
4 -
5 -
6 -
7 -
8 -
9 -
10 -

STAMP

SHEET NO.
SITE PLAN
A0.0



1 A2.0 **PROPOSED ELEVATION**
SCALE: 1/4" = 1'-0"

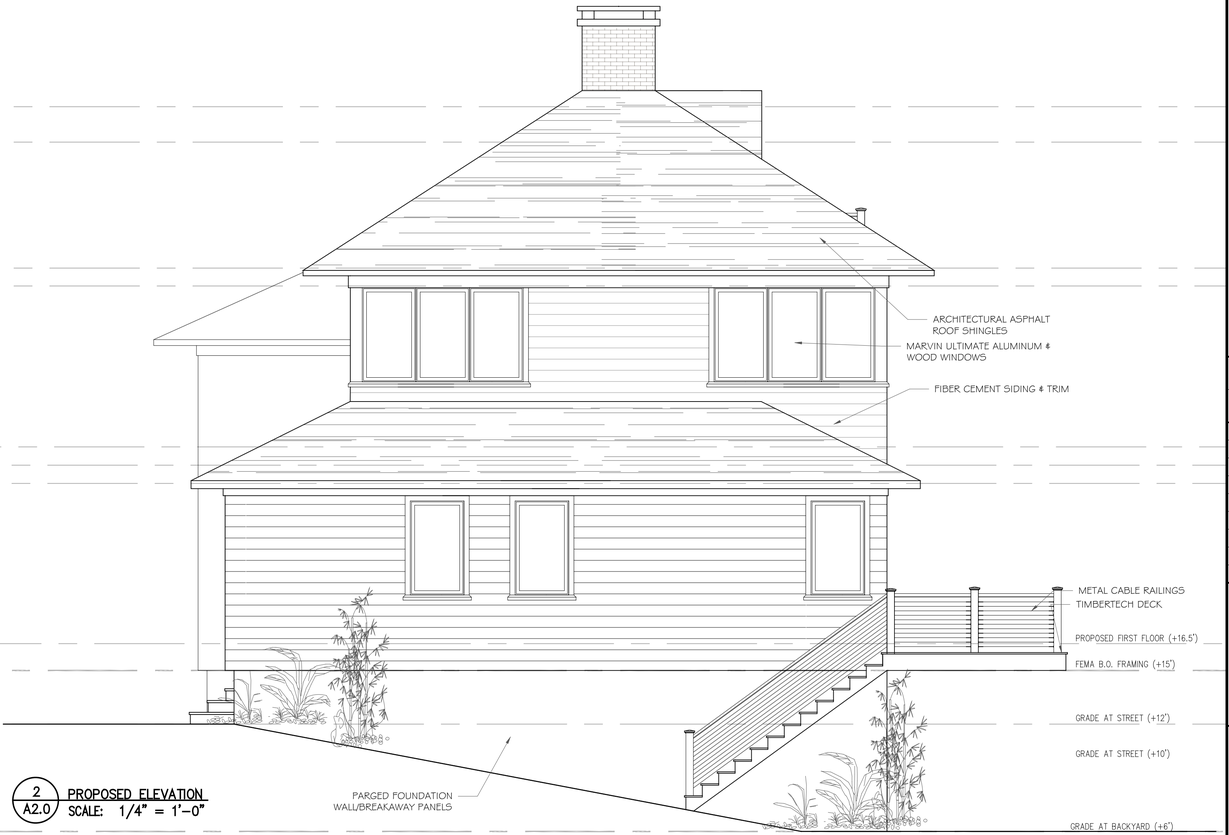

2 A2.0 **PROPOSED ELEVATION**
SCALE: 1/4" = 1'-0"

MELCHERT ARCHITECTURE
2 ARTHUR AVE. BRISTOL RI
MADELINE@MELCHERTARCHITECTURE.COM
518-524-6925

125 HOPE STREET
BRISTOL RI 02809

TITLE: PROPOSED ELEVATIONS
DWG CONTENTS:

PHASE:	DATE:
HDC	4.8.26
DWN BY:	CHKD BY:
MM	-

REVISIONS:
1 ·
2 ·
3 ·
4 ·
5 ·
6 ·
7 ·
8 ·

STAMP

SHEET NO.
A2.0



1 A2.1 **PROPOSED ELEVATION**
SCALE: 1/4" = 1'-0"



2 A2.1 **PROPOSED ELEVATION**
SCALE: 1/4" = 1'-0"

MELCHERT ARCHITECTURE
2 ARTHUR AVE. BRISTOL RI
MADELINE@MELCHERTARCHITECTURE.COM
518-524-6925

125 HOPE STREET

BRISTOL RI 02809

TITLE: PROPOSED ELEVATIONS

DWG CONTENTS:

PHASE:	DATE:
HDC	6.8.26
DWN BY:	CHKD BY:
MM	-

REVISIONS:

STAMP

SHEET NO.

A2.1



Benefits:

- **Industry-leading innovation:** Layerlock® Technology powers StrikeZone®, the industry's largest nailing zone. Paired with our legendary Dura Grip™ sealant, these features ensure that the shingles stay in place, even under high wind conditions
- **The industry's strongest wind warranty:** Timberline HDZ® Shingles are eligible for the WindProven™ Limited Wind Warranty,[1] the industry's first wind warranty with no maximum wind-speed limitation, when installed with the required combination of GAF accessories
- **GAF-exclusive algae-fighting technology:** 25-Year StainGuard Plus™ Algae Protection Limited Warranty[2] powered by proprietary time-release algae-fighting technology
- **Peace of mind:** Timberline HDZ® Shingles come with Lifetime[3] coverage against manufacturing defects
- **Impact rating:** Timberline HDZ® passes the UL 2218 impact-resistance test with a Class 3 rating and may be eligible for insurance discounts[4]
- **For the best look:** Use TimberTex® premium ridge cap shingles or TimberCrest® premium SBS-modified ridge cap shingles

High Definition® colors:



Bold Definition colors:



Product details:

Product/System Specifics
- Fiberglass asphalt construction
- **Dimensions (approx.):** 13 ¼" x 39 ⅜" (337 mm x 1,000 mm)
- **Exposure:** 5 ⅝" (143 mm)
- **Bundles/Square:** 3
- **Pieces/Square:** 64
- **Hip/Ridge:** TimberTex®; TimberCrest®
- **Starter:** Pro-Start®; QuickStart®; WeatherBlocker™

Applicable Standards & Protocols:
- Passes UL 2218 Impact-Resistance Test with Class 3 rating
- UL Listed to ANSI/UL 790 Class A
- State of Florida Approved
- Classified by UL in accordance with ICC-ES AC438
- Meets ASTM D7158, Class H
- Meets ASTM D3161, Class F
- Meets ASTM D3018 Type 1
- Meets ASTM D3462[2]
- Miami-Dade County Product Control Approved
- ICC-ES Evaluation Reports ESR-1475 and ESR-3267
- Meets Texas Department of Insurance Requirements
- Rated by the CRRC; Can be used to comply with Title 24 Cool Roof Requirements (some colors)

[1] Lifetime refers to the length of warranty coverage provided and means as long as the original individual owner(s) of a single-family detached residence (or eligible second owner[s]) owns the property where the qualifying GAF products are installed. For other owners/structures, Lifetime coverage is not applicable. Lifetime coverage on shingles requires the use of GAF Lifetime shingles only. See the *GAF Shingle & Accessory Limited Warranty* for complete coverage and restrictions. Visit gaf.com/LSS for qualifying GAF products. Lifetime coverage on shingles and accessories requires the use of any GAF Lifetime shingle and at least 3 qualifying GAF accessories. See the *GAF Roofing System Limited Warranty* for complete coverage and restrictions. For installations not eligible for the *GAF Roofing System Limited Warranty*, see the *GAF Shingle & Accessory Limited Warranty*. Visit gaf.com/LSS for qualifying GAF products.

[2] 15-year WindProven™ Limited Wind Warranty covers GAF Shingles with LayerLock® Technology only and requires the use of GAF starter strips, roof deck protection, ridge cap shingles, and leak barrier or attic ventilation. See *GAF Roofing System Limited Warranty* for complete coverage and restrictions. Visit gaf.com/LSS for qualifying GAF products. For installations not eligible for the WindProven™ Limited Wind Warranty, see *GAF Shingle & Accessory Limited Warranty* for complete coverage and restrictions.

[3] 25-year StainGuard Plus™ Algae Protection Limited Warranty against blue-green algae discoloration is available only on products sold in packages bearing the StainGuard Plus™ logo. See *GAF Shingle & Accessory Limited Warranty* for complete coverage and restrictions.

[4] Periodically tested by independent and internal labs to ensure compliance with ASTM D3462 at time of manufacture.

[5] UL 2218 Class 3 impact-resistance test performed under controlled laboratory conditions. Insurance discounts may not be available in your area. Where available, insurance discounts may vary. Contact your insurance provider for information.

[6] Eligibility criteria, terms, and restrictions apply. Visit fortifiedhome.org for details. U.S. only.

Note: It is difficult to reproduce the color clarity and natural color blends of these products. Before selecting your color, please ask to see several full-size shingles.

#20589-0225
#20589-0225-MA-EEDMAD4D2-0225

MADE IN THE U.S.A. WITH DOMESTIC AND IMPORTED MATERIALS. AMERICAN JOBS IN AMERICAN FACTORIES.

FORTIFIED[6]

Regional availability

We protect what matters most™ GAF



QUICK-CONNECT® SURFACE MOUNT
Fixed end fitting that attaches to the face of a post or wall with the included screws or bolts. 130° pivot range allows for angled stair terminations.

QUICK-CONNECT® SURFACE MOUNT TENSIONER
Surface Mount fitting with a special swiveling body that allows 3/4" of take up for cable tensioning.

Don't Forget Your Pickets!
*See page 30 for more details and ordering information.

PLEASE NOTE: FEENEY DOES NOT PROVIDE FRAME PICTURED.

Fitting Options

QUICK-CONNECT® SURFACE MOUNT
9903W-PKG

Fixed end fitting that attaches to the face of a post or wall with the included screws or bolts. 130° pivot range allows for angled stair terminations. Includes 2" lag screws for wood posts (6-in bolts for metal posts sold separately)



QUICK-CONNECT® SURFACE MOUNT TENSIONER
9913W-PKG

Surface Mount fitting with a special swiveling body that allows 3/4" of take up for cable tensioning. Includes same lag screws as Surface Mount.



Bulk Cable Options

Bulk CableRail 1/8" diameter, grade-316 stainless steel cable is available in various lengths for use with CableRail fittings.

LENGTH	ITEM #
100-ft	5100
250-ft	5250
500-ft	5500



Feeney has a wide variety of custom fittings for 1/8", 3/16", and 1/4" diameter cables. For more information, visit our website at **feeneyinc.com**

FEENEY ENGINEERED TOOLS® MAKE INSTALLATION EASIER!

1. **Quick-Connect® Release Tool:** For releasing the Quick-Connect® jaws to remove or adjust fitting.
2. **Wrench Wheel:** An easy-to-use tool for tensioning Quick-Connect® Tensioner fittings.
3. **Cable Lacing Needle:** For quickly lacing cable ends through posts without snagging.
4. **Cable Tensioning Gauge:** An easy-to-use tool for checking cable tension.
5. **Cable Cutters:** For shearing stainless steel cables.

*See page 29 for more details and ordering information.

(800) 888-2418

insite. Building design. Streamlined.

FEBRUARY 2024

JamesHardie™

Hardie® Artisan Siding with Lock Joint System — SUBMITTAL FORM 05

Submitted to: .....
Project Name: .....
Submitted by: .....
Date: .....

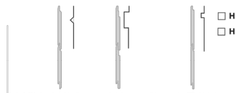

☐ HZ10® Product Zone
☐ HZ5® Product Zone

Joint Style: ☐ V- Groove ☐ Square Channel ☐ Shiplap

SPECIFICATION SHEET 05

DIVISION: 07 00 00 THERMAL AND MOISTURE PROTECTION I SECTION: 07 46 46 FIBER CEMENT SIDING

Manufacturer
James Hardie Building Products Inc.

The products are manufactured at the following locations, with quality control inspections by Intertek:
- Reno, Nevada
- Prattville, Alabama

Compliance with the following codes
- 2024, 2021, 2015, 2012, 2009 and 2006 International Building Code® (IBC)
- 2024, 2021, 2015, 2012, 2009 and 2006 International Residential Code® (IRC)

Features
- Noncombustible
- Dimensionally Stable
- Resistant to damage caused by pests
- Weather Resistant-Engineered for Climate®
- Impact resistant

Use
Hardie® Artisan Siding with Lock Joint System is used as exterior wall covering. The product complies with IBC Section 1403.9 and IRC Section R703.10. The product may be used on exterior walls of buildings of Type I, II, III and IV construction (IBC).

Description
Hardie® Artisan Siding with Lock Joint System is a single-faced, cellulose fiber-reinforced cement (fiber-cement) product. Hardie® Artisan Siding complies with ASTM C1186, as Grade II, Type A; has a flame-spread index of 0 and a smoke-developed index of 5 when tested in accordance with ASTM E84; and is classified as noncombustible when tested in accordance with ASTM E136.

Available Sizes

Product	Width (inches)	Exposure (inches)	Length (feet)	Thickness (inches)
V-Groove	8-¼	7	12	5/8
Shiplap	10-¼	9	12	5/8
Square Channel	10-¼	9	12	5/8

Panel Texture & Finish
Hardie® Artisan Siding with Lock Joint System comes in a smooth finish.

Finish comes primed for field paint.

Engineered for Climate®
Hardie® Artisan Siding with Lock Joint System is engineered for performance to specific weather conditions by climate zones as identified by the following map.



SS2005 PAGE 1 OF 2

The JHInsite® Team James Hardie Building Products www.jameshardiepros.com

SPECIFICATION SHEET 05 FEBRUARY 2024

Performance Properties

	General Property	Test Method	Unit or Characteristic	Requirement	Result
PHYSICAL ATTRIBUTES	Dimensional Tolerances	ASTM C1185	Length	± 0.5% or ± 1/4 in	Pass
			Width	± 0.5% or ± 1/4 in	
			Thickness	± 0.05 in	
			Squareness	Δ in diagonals ≤ 1/32 in/ft of sheet length. Opposite sheet sides shall not vary in length by more than 1/32 in/ft	
			Edge Straightness	≤ 1/32 in/ft of length	
	Density, lb/ft³	ASTM C1185		As reported	<75
	Water Tightness	ASTM C1185	Visual Observations	No drop formation	Pass
	Flexural Strength	ASTM C1185	Wet conditioned, psi	>1015 psi	Pass
			Equilibrium conditioned, psi	>1450 psi	
DURABILITY	Warm Water Resistance, Observations	ASTM C1185	Visual Observations	No visible cracks or structural alteration	Pass
	Heat/Rain Resistance	ASTM C1185	Visual Observations	No visible cracks or structural alteration	Pass
	Freeze/Thaw Resistance	ASTM C1185	Visual Observations	No visible cracks or structural alteration	Pass
			Freeze/Thaw, % strength retention	≥ 80%	
	UV Accelerated Weathering Test	ASTM G23	Visual Observations	No cracking, checking, or crazing	Pass
FIRE CHARACTERISTICS	Surface Burning Characteristics	ASTM E84	Flame Spread Index (FSI)		0
			Smoke Developed Index (SDI)		≤ 5
			Fuel Contributed		0
	Non-combustibility	ASTM E136	NFPA Class		A
			Uniform Building Code Class	As reported	1
			International Building Code® class		A
	Non-combustible	ASTM E136	Non-combustible	Pass/fail	Pass
	Fire Resistance Rated Construction	ASTM E119	Fire Resistance Rating	1-hour	Note 1

Installation
Install Hardie® Artisan Siding with Lock Joint System in accordance with:
- Hardie® Artisan Siding with Lock Joint System Installation Instructions
- Hardie® Artisan Siding with Lock Joint System Technical Data Sheet
- Requirements of authorities having jurisdiction

Sustainable Design Contribution
- Regionally sourced content- varies by project location
- Avoidance of certain chemicals or Red List Materials Compliant

Detailed product information for LEED projects, or other state or regional sustainability programs is available through James Hardie Technical Services.

Storage and Handling
Store flat and keep dry and covered prior to installation.

Warranty
Hardie® Artisan Siding with Lock Joint System: 30-year, Non-Prorated, Limited Warranty

Technical Services
Contact James Hardie Technical Services online at JamesHardie.com, or by phone at (800) 426-4051

SS2005 2/24 PAGE 2 OF 2

IMPORTANT: Failure to install and finish this product in accordance with applicable building codes and James Hardie written application instructions may affect system performance, violate local building codes, void the product-only warranty and lead to personal injury. **DESIGN ADVICE:** Any information or assistance provided by James Hardie in relation to specific projects must be approved by the relevant specialists engaged for the project eg, builder, architect or engineer. James Hardie will not be responsible in connection with any such information or assistance.

© 2024 James Hardie Building Products, Inc. All rights reserved TM, SM and ® denote trademarks or registered trademarks of James Hardie Technology Limited. The International Building Code and International Residential Code trademarks are registered trademarks of International Code Council, Inc.

Product warranties, safety information and additional installation information are available at jameshardiepros.com
1 866 442 7343 I www.jameshardie.com

JamesHardie™

Casement Narrow Frame

The Marvin Ultimate™ Casement Narrow Frame window is a contemporary option with a flush exterior and narrow jamb, ideal for frame-in-frame replacement and allowing quick and easy installation without disturbing the existing frame or interior wall. With its sleek design and narrow lines, this window is a great fit for new construction or remodeling projects that call for slim lines and maximum views.

fig. 1 CASEMENT NARROW FRAME WINDOWS Designer Black
fig. 2 INTERIOR VIEW Pine
fig. 3 EXTERIOR VIEW Gunmetal
fig. 4 CASEMENT NARROW FRAME WINDOWS Designer Black


fig. 1


fig. 2


fig. 3


fig. 4

FEATURES

Designed for replacement with a narrow jamb that minimizes teardown of existing frame and walls

Durable hardware for easy operation even at large sizes

Unique Wash Mode allows convenient cleaning of both sides of glass from indoors

Choose crank-out or push-out operation

Multi-point locking system ensures a tight seal and security from top to bottom

Expansive sizes to fit openings up to 3'6" wide by 8' high

Choose traditional Ogee profiles or square profiles for a more contemporary look

Corner Narrow Frame

The Marvin Ultimate™ Corner Narrow Frame window makes a strong architectural statement in expansive sizes, combining narrow profiles and clean lines with industry-leading performance. Pair this corner window with other Marvin narrow frame windows for consistent sightlines that maximize glass and views.

fig. 1 CORNER NARROW FRAME WINDOW Ebony
fig. 2 INTERIOR VIEW Designer Black
fig. 3 EXTERIOR VIEW Liberty Bronze (Powlescoat)
fig. 4 INTERIOR CORNER DETAIL The clad cap sits flush creating a clean-lined contemporary aesthetic.
fig. 5 EXTERIOR CORNER DETAIL The corner cap is stepped with a square profile.
fig. 6 CORNER NARROW FRAME WINDOW Ebony


fig. 1

fig. 2


fig. 3


fig. 4


fig. 5


fig. 6

FEATURES

Pair with other Marvin narrow frame windows for consistent sightlines that maximize glass and views

Available in symmetrical or asymmetrical configurations

Expansive sizes to fit openings up to 7' wide by 12' high

Choose traditional Ogee profiles or square profiles for a more contemporary look

MELCHERT ARCHITECTURE
2 ARTHUR AVE. BRISTOL RI 518-524-6925
MADELINE@MELCHERTARCHITECTURE.COM

125 HOPE STREET
BRISTOL RI 02809

PROPOSED MATERIALS

TITLE:
DWG CONTENTS:

PHASE:	DATE:
HDC	4.8.26
DWN BY:	CHKD BY:
MM	-

REVISIONS:

STAMP

SHEET NO.
A3.1