COMMISSION MEETING AGENDA
Commission Chamber
Tuesday, March 07, 2023
2:00 PM

INVOCATION

Lead Pastor Wesley Weatherford, Oasis Church at Hephzibah

PLEDGE OF ALLEGIANCE TO THE FLAG OF THE UNITED STATES OF AMERICA

DELEGATION(S)

A. **Mr. Kevin Delaigle** regarding the status of the City's Cemetery Perpetual Care Commission.

B. **Mr. Philip N. Gregory, Sr.** regarding the Regency Mall property and the James Brown Statue.

CONSENT AGENDA

(Items 1-20)

PUBLIC SERVICES

1. **Motion to approve New Ownership-Existing Location: A.N. 23-06:** request by Levorsey Scott for a retail package **Beer & Wine** License to be used in connection with Second Peach, Inc located at 1342 Gordon Hwy. District 1. Super District 9. **(Approved by Public Services Committee February 28, 2023)**

2. Motion to **approve New Ownership-Existing Location: A.N. 23-07:** request by Levorsey Scott for a retail package **Beer & Wine** License to be used in connection with Peach First, Corp. located at 1499 Gordon Hwy. District 2. Super District 9. **(Approved by Public Services Committee February 28, 2023)**

3. Motion to **approve New Ownership-Existing Location: A.N. 23-08:** A request by David Hopkins for a **Nano Distillery** License to be used in connection with Second City Distillery located at #4 Eighth Street. District 1. Super District 9. **(Approved by Public Services Committee February 28, 2023)**District 1. Super District 9.

4. Motion to **approve Existing Location: A.N. 23-09:** A request by Jennifer Marshall for an on-premises consumption **Liquor & Beer** License to be used in connection with K & J Soulbar and Grill located at 720 E Robinson Ave. Ste 101-102. There will Be **Sunday Sales.** District 3. Super District 10. **(Approved by Public Services Committee February 28, 2023)**

5. Motion to **approve** the donation of two sculptures for a public art installation at the central island of the roundabout North Leg Road / Milledgeville Road. **(Approved by Public Services Committee February 28, 2023)**

6. Motion to **approve** a five-year contract with Departure Media, Inc. for In-Terminal Advertising program at Augusta Regional Airport. Approved by the Augusta Aviation Commission on

January 26, 2023. **(RFP 22-253)** The contract had an initial term of five (5) years with no options for renewal **(Approved by Public Services Committee February 28, 2023)**

7. Motion to **approve** a construction contract with RW Allen Construction in the amount of $2,660,428.00 to perform all tasks related to the Augusta Regional Airport (AGS) Fuel Farm Improvement Project - Base Bid Item 22-244A. Approved by the Augusta Aviation Commission on February 10, 2023.**(Approved by Public Services Committee February 28, 2023)**

ADMINISTRATIVE SERVICES

8. Motion to approve Augusta, Georgia's submission to HUD of the HOME Investment Partnership Program– American Rescue Plan Cost Allocation Plan and request the following:

   Authority for the Mayor to execute 1) Standard Form 424, 2) Standard Form 424 D, and 3) Certifications and Assurances required by HUD for HOME ARP funds;

   Allow HCD to move forward with implementation of Cost Allocation Plan activities;

   Allow HCD to hire one (1) additional FT staff person (concurrent with the term of grant)/provide supplemental pay (where applicable) for all affected employees;

   Instruct Finance department to add available funding to HCD's budget for immediate use and implementation. **(Approved by Administrative Services Committee February 28, 2023)**

ENGINEERING SERVICES

9. Motion to **approve** purchase of 300 meter registers for Augusta Utilities. **(Approved by Engineering Services Committee February 28, 2023)**

10. Motion to **approve** resolution regarding hunting around the Phinizy Swamp Nature Park and the Constructed Wetlands. **(Approved by Engineering Services Committee February 28, 2023)**

11. Motion to **approve** Change Order to Extend AUD Billing Software Upgrade Go Live date by two months and add CO 1 in the amount of $41,000.00 to Systems & Software – PO #22AUA041**(Approved by Engineering Services Committee February 28, 2023)**

12. Motion to **approve** award of Construction Contract to Reeves Construction subject to Value Engineering and in the amount of $12,198,593.15 for Phase I of the Transportation Investment Act (TIA) Projects, Greene Street Improvements Project-Road Segment 5th St. to East Boundary, subject to receipt of signed contracts and proper bonds. RFP 22-294 / requested by Engineering. **(Approved by Engineering Services Committee February 28, 2023)**

13. Motion to **approve** Task Order funding for Stormwater System Assessment and Drainage Improvements Engineering Services Agreement to Cranston Engineering (Cranston) in the amount of $33,150.00 for John C Calhoun/Ellis Street Drainage Conveyance System Improvements Final Design & Construction plans. Requested by the Engineering. RFQ 19-148 **(Approved by Engineering Services Committee February 28, 2023)**

14. Motion to **approve** Award of "Augusta's Grounds and Landscaped Improvements Maintenance" Contract to Augusta Quality LLC for Groups 1, 2 and 3 - Attached EXHIBIT A Contract Services, subject to receipt of signed contract and proper insurance documents. The Contract is effective 1/1/2023 for four years with an option to renew for two additional one-year terms. Also, approve $330,000/year to fund these contracted services. Requested by Engineering. RFP 22-301**(Approved by Engineering Services Committee February 28, 2023)**

FINANCE

15. Motion to **approve** funding of operating, capital & encumbrance carryovers. **(Approved by Finance February 28, 2023)**

16. Motion to **approve** update of fund balance policy and goals.**(Approved by Finance February 28, 2023)**

17. Motion to **approve** a Bond and Fiscal Health work session with Augusta's Financial advisor, Davenport & Company, on March 20, 2023 at 2:00pm in the Linda Beazley Room of the Municipal Building. **(Approved by Finance February 28, 2023)**

APPOINTMENT(S)

18. Motion to **approve** the appointment of **Mr. John Clarke** to the General Aviation Commission (Daniel Field) representing **District 7. (Requested by Commissioner Sean Frantom)**.

19. Motion to **approve** the reappointment of **Mr. James Scott** to the Richmond County Board of Assessors representing **District 10**. **(Requested by Commissioner Wayne Guilfoyle)**

PETITIONS AND COMMUNICATIONS

20. Motion to **approve** the minutes of the Commission Meeting held, Tuesday, February 21, 2023 and Special Called Meeting held February 28, 2023.

*******END CONSENT AGENDA*******
AUGUSTA COMMISSION

AUGUSTA COMMISSION
REGULAR AGENDA

(Items 21-24)

ADMINISTRATIVE SERVICES

21. Motion to **approve** hosting Strategic Planning Session with UGA CVIOG relative to Augusta's Stepping Up Initiative and associated fees. **(Requested by Commissioner Jordan Johnson)**

FINANCE

22. Discuss support for Band of Brothers Annual Juneteenth Celebration. **(Requested by Commissioner Jordan Johnson)**

23. Consider a request from **Mr. Sean Mooney** for financial support on behalf of the Irish Heritage Society in association with the 2023 St. Patrick's Day Parade. **(No Recommendation from Finance Committee on February 28, 2023)**

LEGAL MEETING

A. Pending and Potential Litigation

B. Real Estate

C. Personnel

24. Motion to authorize execution by the Mayor of the affidavit of compliance with Georgia's Open Meeting Act.

Commission Meeting

March 7, 2023

Mr. Kevin Delaigle

Department:	N/A
Presenter:	N/A
Caption:	**Mr. Kevin Delaigle** regarding the status of the City's Cemetery Perpetual Care Commission.
Background:	N/A
Analysis:	N/A
Financial Impact:	N/A
Alternatives:	N/A
Recommendation:	N/A
Funds are available in the following accounts:	N/A
REVIEWED AND APPROVED BY:	N/A

Lena Bonner

From: Kevin Delaigle <kevindelaigle@gmail.com>
Sent: Tuesday, January 24, 2023 11:59 AM
To: Lena Bonner
Cc: Commissioner Brandon Garrett; Commissioner Catherine Smith-McKnight; Commissioner Jordan Johnson; Commissioner Jordan Johnson; Maurice D. McDowell; Mayor Johnson
Subject: [EXTERNAL] City Cemetery Perpetual Care Commission status

Dear Ms. Bonner,

I would like to appear for a delegation item for the Tuesday, March 7 Commission Meeting regarding the status of the City Cemetery Perpetual Care Commission and inquire into what monies are still available in the City Perpetual Care fund that owners of plots in City Cemeteries paid into over the decades.
I would also to inquire as to why this fund has not been maintained in effect and/or used the last several (or who knows how many?) years for the maintenance of City Cemeteries.
I have family documents that go back to 1940 regarding perpetual care at Magnolia that I would like to submit as information.

Please let me know if there's a form I need to fill out.

Sincerely,
Kevin de l'Aigle

Commission Meeting

March 7, 2023

Discuss Regency Mall and James Brown Statue

Department:	N/A
Presenter:	Philip N. Gregory, Sr.
Caption:	Mr. Philip N. Gregory, Sr. regarding the Regency Mall property and the James Brown Statue.
Background:	N/A
Analysis:	N/A
Financial Impact:	N/A
Alternatives:	N/A
Recommendation:	N/A
Funds are available in the following accounts:	N/A
REVIEWED AND APPROVED BY:	N/A

AGENDA ITEM REQUEST FORM

Commission meetings: First and third Tuesdays of each month – 2:00 p.m.
Committee meetings: Second and last Tuesdays of each month – 1:00 p.m.

Commission/Committee: (Please check one and insert meeting date)

✓	Commission	Date of Meeting 3/7/23
	Public Safety Committee	Date of Meeting
	Public Services Committee	Date of Meeting
	Administrative Services Committee	Date of Meeting
	Engineering Services Committee	Date of Meeting
	Finance Committee	Date of Meeting

Contact Information for Individual/Presenter Making the Request:

Name: Philip N. Gregory Sr.
Address: 2947 Dahlia Dr.
Telephone Number: 706-799-3477
Fax Number: N/A
E-Mail Address: N/A

Caption/Topic of Discussion to be placed on the Agenda:

Regency Mall

James Brown Statue

Please send this request form to the following address:

Ms. Lena J. Bonner
Clerk of Commission
Suite 220 Municipal Building
535 Telfair Street
Augusta, GA 30901

Telephone Number: 706-821-1820
Fax Number: 706-821-1838
E-Mail Address: nmorawski@augustaga.gov

Requests may be faxed, e-mailed or delivered in person and must be received in the Clerk's Office no later than 9:00 a.m. on the Thursday preceding the Commission and Committee meetings of the following week. A five-minute time limit will be allowed for presentations.

Commission Meeting

March 7, 2023

Alcohol Application

Department:	Planning & Development Department
Presenter:	Julietta H. Walton-Business License & Customer Service Manager
Caption:	**Motion to approve New Ownership-Existing Location: A.N. 23-06:** request by Levorsey Scott for a retail package **Beer & Wine** License to be used in connection with Second Peach, Inc located at 1342 Gordon Hwy. District 1. Super District 9. **(Approved by Public Services Committee February 28, 2023)**
Background:	This is a New Ownership Application. Formerly in the name of Aasim Mohammed Abdul
Analysis:	The applicant meets the requirements of the City of Augusta's Alcohol Ordinance.
Financial Impact:	The applicant will pay a fee of $1,330.00
Alternatives:	N/A
Recommendation:	The Planning & Development approved the application subject to additional information not contradicting the applicant's statements. The Sheriff's Office approved the application subject to additional information not contradicting applicant's statements.
Funds are available in the following accounts:	N/A
REVIEWED AND APPROVED BY:	N/A

Case Number: A.N. 23-06

Application Type: Retail Package Beer & Wine

Business Name: **Second Peach, Inc**

Hearing Date: February 28, 2023

Report Prepared By: Julietta H. Walton, Business License & Customer Service Manager

---

Applicant: *Levorsey Scott*

Property Owner: 1499 Realty Holding LLC

Address of Property: 1342 Gordon Hwy

Tax Parcel #: 073-0-031-00-0

Commission District: District: 1 Super District: 9

Background: New Ownership

ANALYSIS: Location restrictions: zoning and proximity to churches, libraries, schools, and public recreation areas.

- **Zoning:** H-I (Heavy Industrial) Zone
- **Distance Requirements**: The proposed location for retail package Beer & Wine meets the minimum distance location to churches, schools, libraries, and public recreation areas.

ADDITIONAL CONSIDERATIONS:

- **Reputation, character**. The applicant's reputation, character, trade and business associations or past business ventures, mental and physical capacity to conduct business.
- **Previous violations of liquor laws**. If the applicant is a previous holder of a license to sell alcoholic liquors, whether or not he has violated any laws, regulations or ordinance relating to such business.
- **Manner of conducting prior liquor business**. If the applicant is a previous holder of a license to sell alcoholic liquors, the manner in which he conducted the business thereunder especially as to the necessity for unusual police observation and inspection in order to prevent the violation of any law, regulation or ordinance relating to such business.
- **Location**. The location for which the license is sought, as to traffic congestion, general character of neighborhood, and the effect such an establishment would have on the adjacent surrounding property values.
    - **The proposed location is an Existing Location.**

- **Number of licenses in a trading area**. The number of licenses already granted for similar business in the trading area of the place for which the license is sought.
- **Dancing**. If dancing is to be permitted upon the premise for which the license is sought and the applicant has previously permitted dancing upon the premises controlled or supervised by him, the manner in which he controlled or supervised such dancing to prevent any violation of any law, regulation, or ordinance.
- **Previous revocation of license**. If the applicant is a person, whose license issued under the police powers of any governing authority has been previously suspended or revoked or who has previously had an alcoholic beverages licenses suspended or revoked. Payment of taxes. If the applicant and business are not delinquent in the payment of any local taxes.
- **Congregation of minors**. Any circumstances, which may cause minors to congregate in the vicinity of the proposed location, even if the location meets the distance requirement under section 6-2-64 (b) herein.
- **Prior incidents**. Evidence that a substantial number of incidents requiring police intervention have occurred within a square city block of the proposed location during the twelve (12) months immediately preceding the date of application.
- **Previous Denial or Revocation**. The denial of an application or revocation of a license, occurring within the preceding twelve (12) months, which was based on the qualifications of the proposed location.

FINANCIAL IMPACT: The applicant will pay a fee of $1,330.00.

RECOMMENDATION:

The Planning & Development approved the application subject to additional information not contradicting the applicant's statements.
The Sheriff's Office approved the application subject to additional information not contradicting applicant's statements.

Note: The staff report includes the information available approximately two weeks prior to the Public Services Committee meeting. It represents an evaluation of the facts presented by the applicant, research done by the staff, and consideration of the relevant factors in the Comprehensive Zoning Ordinance and the Alcohol Ordinance of Augusta, Georgia. New facts may emerge, and staff reserves the right to make an oral recommendation at the hearing based on all the information available at that time.

COPY

Augusta-Richmond County
1815 Marvin Griffin Road
Augusta, GA 30906

ALCOHOL BEVERAGE APPLICATION

Alcohol Number _____ Year 2023 Alcohol Account Number _____

1. Name of Business Second Peach Inc
2. Business Address 1342 Gordon Hwy
3. City Augusta State GA Zip 30901
4. Business Phone (____) (404)-403-9580 Home Phone (_____) _____
5. Applicant Name and Address: Levorsey Scott
   4013 Miners Lanes, Villa Rica GA 30180
6. Applicant Social Security # _____ D.O.B. _____
7. If Application is a transfer, list previous Applicant: _____
8. Business Location: Map & Parcel _____ Zoning _____
9. Location Manager(s) Levorsey Scott
10. Is Applicant an American Citizen or Alien lawfully admitted for permanent residency?
    (✓) Yes ( ) No

OWNERSHIP INFORMATION

11. Corporation (if applicable): Date Chartered: 07/28/2022
12. Mailing Address: 4013 Miners Lanes, Villa Rica GA 30180
    Name of Business Second Peach Inc
    Attention Owner
    Address 1342 Gordon Hwy
    City/State/Zip Augusta Ga 30901
13. Ownership Type: (✓) Corporation ( ) Partnership ( ) Individual
14. Corporate Name: Second Peach Inc
    List name and other required information for each person having interest in this business.

Name	Position	SSNO #	Address	Interest
Levorsey Scott	Owner		4013 Miners Lanes, Villa Rica GA 30180	100%

15. What type of business will you operate in this location?
    ( ) Restaurant ( ) Lounge ( ) Convenience Store
    ( ) Package Store (✓) Other: GAS STATION AND CONVENIENECE STORE

License Information	Liquor	Beer	Wine	Dance	Sunday Sales
Retail Package Dealer		✓	✓		
Consumption on Premises					
Wholesale					

Total License Fee: $_____
Prorated License Fee: (After July 1 ONLY) $_____

16. Have you ever applied for an Alcohol Beverage License before: NO
    If so, give year of application and its disposition: _____
17. Are you familiar with Georgia and Augusta-Richmond County laws regarding the sale of alcoholic beverages? ( ) Yes (✓) No If so, please initial. L.S

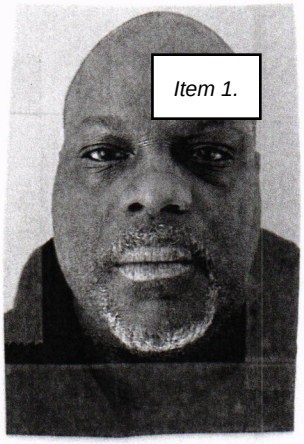

18. Attach a passport-size photograph (front view) taken within two years. Write name on back of the dealer submitting the license application.

19. Has any liquor business in which you hold, or have held, any financial interest, or are employed, or have been employed, ever been cited for any violation of the rules and regulations of Richmond County or the State Revenue Commission relating to the sale and distribution of distilled spirits? ( ) Yes (✓) No
If yes, give full details: _____

20. Have you ever been arrested, or held by Federal, State, or other law-enforcement authorities, for any violation of any Federal, State, County or Municipal law, regulation or ordinance? (Do not include traffic violations, with the exception of any offenses pertaining to alcohol or drugs.) All other charges must be included, even if they are dismissed. ( ) Yes (✓) No
If yes, give reason charged or held, date and place where charged and its disposition.

21. List owner or owners of building and property.
LeVorsey L Scott & Deborah Scott

22. List the name and other required information for each person, firm or corporation having any interest in the business.
Levorsey Scott - 4013 Miners Lanes, Villa Rica Ga 30180

23. If a new application, attach a surveyor's plat and state the straight line distance from the property line of school, church, library, or public recreation area to the wall of the building where alcohol beverages are sold.
A.) Church _____ C.) School _____
B.) Library _____ D.) Public Recreation _____

24. State of Georgia, Augusta-Richmond County, I, Levorsey Scott
Do solemnly swear, subject to the penalties of false swearing, that the statements and answers made by me as the applicant in the forgoing alcoholic beverage application are true.

X _____
Applicant Signature

25. I hereby certify that Levorsey Scott is personally known to be, that he/she signed his/her name to the foregoing application stating to me that he/she knew and understood all statements and answers made herein, and, under oath actually administered by me, has sworn that said statements and answers are true.
This 22nd day of December, in the year 2022.

N JIWANI
COBB County
My Commission Expires
January 27, 2023

X _____
Notary Public

FOR OFFICE USE ONLY

Department Recommendation	Approve	Deny	Comments
Alcohol Inspector			
Sheriff			
Fire Inspector			

The Board of Commissioners on the _____ day of _____, in the year _____
(Approved, Disapproved) the forgoing application.

_____ _____
Administrator Date

Commission Meeting

March 7, 2023

Alcohol Application

Department:	Planning & Development Department
Presenter:	Julietta H. Walton-Business License & Customer Service Manager
Caption:	Motion to **approve New Ownership-Existing Location: A.N. 23-07:** request by Levorsey Scott for a retail package **Beer & Wine** License to be used in connection with Peach First, Corp. located at 1499 Gordon Hwy. District 2. Super District 9. **(Approved by Public Services Committee February 28, 2023)**
Background:	This is a New Ownership Application. Formerly in the name of Aasim Mohammed Abdul
Analysis:	The applicant meets the requirements of the City of Augusta's Alcohol Ordinance.
Financial Impact:	The applicant will pay a fee of $1,330.00
Alternatives:	N/A
Recommendation:	The Planning & Development approved the application subject to additional information not contradicting the applicant's statements. The Sheriff's Office approved the application subject to additional information not contradicting applicant's statements.
Funds are available in the following accounts:	N/A
REVIEWED AND APPROVED BY:	N/A

Case Number: A.N. 23-07

Application Type: Retail Package Beer & Wine

Business Name: Peach First, Corp

Hearing Date: February 28, 2023

Report Prepared By: Julietta H. Walton, Business License & Customer Service Manager

---

Applicant: *Levorsey Scott*

Property Owner: 1499 Realty Holding LLC

Address of Property: 1499 Gordon Hwy

Tax Parcel #: 087-2-008-00-0

Commission District: District: 2 Super District: 9

Background: New Ownership

ANALYSIS: Location restrictions: zoning and proximity to churches, libraries, schools, and public recreation areas.

- **Zoning:** B-1 (Neighborhood Business) Zone
- **Distance Requirements**: The proposed location for retail package Beer & Wine meets the minimum distance location to churches, schools, libraries, and public recreation areas.

ADDITIONAL CONSIDERATIONS:

- **Reputation, character**. The applicant's reputation, character, trade and business associations or past business ventures, mental and physical capacity to conduct business.
- **Previous violations of liquor laws**. If the applicant is a previous holder of a license to sell alcoholic liquors, whether or not he has violated any laws, regulations or ordinance relating to such business.
- **Manner of conducting prior liquor business**. If the applicant is a previous holder of a license to sell alcoholic liquors, the manner in which he conducted the business thereunder especially as to the necessity for unusual police observation and inspection in order to prevent the violation of any law, regulation or ordinance relating to such business.
- **Location**. The location for which the license is sought, as to traffic congestion, general character of neighborhood, and the effect such an establishment would have on the adjacent surrounding property values.
    - **The proposed location is an Existing Location.**

- **Number of licenses in a trading area**. The number of licenses already granted for similar business in the trading area of the place for which the license is sought.
- **Dancing**. If dancing is to be permitted upon the premise for which the license is sought and the applicant has previously permitted dancing upon the premises controlled or supervised by him, the manner in which he controlled or supervised such dancing to prevent any violation of any law, regulation, or ordinance.
- **Previous revocation of license**. If the applicant is a person, whose license issued under the police powers of any governing authority has been previously suspended or revoked or who has previously had an alcoholic beverages licenses suspended or revoked. Payment of taxes. If the applicant and business are not delinquent in the payment of any local taxes.
- **Congregation of minors**. Any circumstances, which may cause minors to congregate in the vicinity of the proposed location, even if the location meets the distance requirement under section 6-2-64 (b) herein.
- **Prior incidents**. Evidence that a substantial number of incidents requiring police intervention have occurred within a square city block of the proposed location during the twelve (12) months immediately preceding the date of application.
- **Previous Denial or Revocation**. The denial of an application or revocation of a license, occurring within the preceding twelve (12) months, which was based on the qualifications of the proposed location.

FINANCIAL IMPACT: The applicant will pay a fee of $1,330.00.

RECOMMENDATION:

The Planning & Development approved the application subject to additional information not contradicting the applicant's statements.
The Sheriff's Office approved the application subject to additional information not contradicting applicant's statements.

Note: The staff report includes the information available approximately two weeks prior to the Public Services Committee meeting. It represents an evaluation of the facts presented by the applicant, research done by the staff, and consideration of the relevant factors in the Comprehensive Zoning Ordinance and the Alcohol Ordinance of Augusta, Georgia. New facts may emerge, and staff reserves the right to make an oral recommendation at the hearing based on all the information available at that time.

COPY

Augusta-Richmond County
1815 Marvin Griffin Road
Augusta, GA 30906

ALCOHOL BEVERAGE APPLICATION

Alcohol Number _____ Year 2023 Alcohol Account Number _____

1. Name of Business Peach First Corp
2. Business Address 1499 Gordon Hwy
3. City Augusta State GA Zip 30901
4. Business Phone (____) (404)-403-9580 Home Phone (_____) _____
5. Applicant Name and Address: Levorsey Scott
   4013 Miners Lanes, Villa Rica GA 30180
6. Applicant Social Security # _____ D.O.B. _____
7. If Application is a transfer, list previous Applicant:
8. Business Location: Map & Parcel _____ Zoning _____
9. Location Manager(s) Levorsey Scott
10. Is Applicant an American Citizen or Alien lawfully admitted for permanent residency?
    (✓) Yes ( ) No

OWNERSHIP INFORMATION

11. Corporation (if applicable): Date Chartered: 07/28/2022
12. Mailing Address: 4013 Miners Lanes, Villa Rica GA 30180
    Name of Business Peach First Corp
    Attention Owner
    Address 1499 Gordon Hwy
    City/State/Zip Augusta Ga 30901
13. Ownership Type: (✓) Corporation ( ) Partnership ( ) Individual
14. Corporate Name: Peach First Corp
    List name and other required information for each person having interest in this business.

Name	Position	SSNO #	Address	Interest
Levorsey Scott	Owner		4013 Miners Lanes, Villa Rica GA 30180	100%

15. What type of business will you operate in this location?
    ( ) Restaurant ( ) Lounge ( ) Convenience Store
    ( ) Package Store (✓) Other: GAS STATION AND CONVENIENECE STORE

License Information	Liquor	Beer	Wine	Dance	Sunday Sales
Retail Package Dealer		✓	✓		
Consumption on Premises					
Wholesale					

Total License Fee: $_____
Prorated License Fee: (After July 1 ONLY) $_____

16. Have you ever applied for an Alcohol Beverage License before: NO
    If so, give year of application and its disposition: _____
17. Are you familiar with Georgia and Augusta-Richmond County laws regarding the sale of alcoholic beverages? ( ) Yes (✓) No If so, please initial. L.S

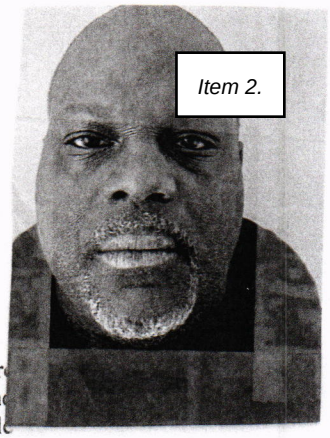

18. Attach a passport-size photograph (front view) taken within two years. Write name on back of the dealer submitting the license application.

19. Has any liquor business in which you hold, or have held, any financial interest, or are employed, or have been employed, ever been cited for any violation of the rules and regulations of Richmond County or the State Revenue Commission relating to the sale and distribution of distilled spirits? ( ) Yes (✓) No
If yes, give full details: _____

20. Have you ever been arrested, or held by Federal, State, or other law-enforcement authorities, for any violation of any Federal, State, County or Municipal law, regulation or ordinance? (Do not include traffic violations, with the exception of any offenses pertaining to alcohol or drugs.) All other charges must be included, even if they are dismissed. ( ) Yes (✓) No
If yes, give reason charged or held, date and place where charged and its disposition.

21. List owner or owners of building and property.
LeVorsey L Scott & Deborah Scott

22. List the name and other required information for each person, firm or corporation having any interest in the business.
Levorsey Scott - 4013 Miners Lanes, Villa Rica Ga 30180

23. If a new application, attach a surveyor's plat and state the straight line distance from the property line of school, church, library, or public recreation area to the wall of the building where alcohol beverages are sold.
A.) Church _____ C.) School _____
B.) Library _____ D.) Public Recreation _____

24. State of Georgia, Augusta-Richmond County, I, Levorsey Scott
Do solemnly swear, subject to the penalties of false swearing, that the statements and answers made by me as the applicant in the forgoing alcoholic beverage application are true.

_____
Applicant Signature

25. I hereby certify that Levorsey Scott is personally known to be, that he/she signed his/her name to the foregoing application stating to me that he/she knew and understood all statements and answers made herein, and, under oath actually administered by me, has sworn that said statements and answers are true.
This 22nd day of December, in the year 2022.

COBB County
My Commission Expires
January 27, 2023

_____
Notary Public

FOR OFFICE USE ONLY

Department Recommendation	Approve	Deny	Comments
Alcohol Inspector			
Sheriff			
Fire Inspector			

The Board of Commissioners on the _____ day of _____, in the year _____ (Approved, Disapproved) the forgoing application.

_____ _____
Administrator Date

Commission Meeting

March 7, 2023

Alcohol Application

Department:	Planning & Development Department
Presenter:	Julietta H. Walton-Business License & Customer Service Manager
Caption:	Motion to **approve New Ownership-Existing Location: A.N. 23-08:** A request by David Hopkins for a **Nano Distillery** License to be used in connection with Second City Distillery located at #4 Eighth Street. District 1. Super District 9. **(Approved by Public Services Committee February 28, 2023)**District 1. Super District 9.
Background:	This is a New Ownership Application. Formerly in the name of William Hatch
Analysis:	The applicant meets the requirements of the City of Augusta's Alcohol Ordinance.
Financial Impact:	The applicant will pay a fee of $1,500.00.
Alternatives:	N/A
Recommendation:	The Planning & Development approved the application subject to additional information not contradicting the applicant's statements. The Sheriff's Office approved the application subject to additional information not contradicting applicant's statements.
Funds are available in the following accounts:	N/A
REVIEWED AND APPROVED BY:	N/A

Case Number: A.N. 23-08

Application Type: Nano Distillery

Business Name: Second City Distillery

Hearing Date: February 28, 2023

Report Prepared By: Julietta H. Walton, Business License & Customer Service Manager

---

Applicant: *David Hopkins*

Property Owner: Morris Communications

Address of Property: #4 Eighth Street

Tax Parcel #: 037-3-013-00-0

Commission District: District: 1 Super District: 9

Background: New Ownership

ANALYSIS: Location restrictions: zoning and proximity to churches, libraries, schools, and public recreation areas.

- **Zoning:** B-2 (General Business) Zone
- **Distance Requirements**: The proposed location for Nano Distillery meets the minimum distance location to churches, schools, libraries, and public recreation areas.

ADDITIONAL CONSIDERATIONS:

- **Reputation, character**. The applicant's reputation, character, trade and business associations or past business ventures, mental and physical capacity to conduct business.
- **Previous violations of liquor laws**. If the applicant is a previous holder of a license to sell alcoholic liquors, whether or not he has violated any laws, regulations or ordinance relating to such business.
- **Manner of conducting prior liquor business**. If the applicant is a previous holder of a license to sell alcoholic liquors, the manner in which he conducted the business thereunder especially as to the necessity for unusual police observation and inspection in order to prevent the violation of any law, regulation or ordinance relating to such business.
- **Location**. The location for which the license is sought, as to traffic congestion, general character of neighborhood, and the effect such an establishment would have on the adjacent surrounding property values.
    - **The proposed location is an Existing Location.**

- **Number of licenses in a trading area**. The number of licenses already granted for similar business in the trading area of the place for which the license is sought.
- **Dancing**. If dancing is to be permitted upon the premise for which the license is sought and the applicant has previously permitted dancing upon the premises controlled or supervised by him, the manner in which he controlled or supervised such dancing to prevent any violation of any law, regulation, or ordinance.
- **Previous revocation of license**. If the applicant is a person, whose license issued under the police powers of any governing authority has been previously suspended or revoked or who has previously had an alcoholic beverages licenses suspended or revoked. Payment of taxes. If the applicant and business are not delinquent in the payment of any local taxes.
- **Congregation of minors**. Any circumstances, which may cause minors to congregate in the vicinity of the proposed location, even if the location meets the distance requirement under section 6-2-64 (b) herein.
- **Prior incidents**. Evidence that a substantial number of incidents requiring police intervention have occurred within a square city block of the proposed location during the twelve (12) months immediately preceding the date of application.
- **Previous Denial or Revocation**. The denial of an application or revocation of a license, occurring within the preceding twelve (12) months, which was based on the qualifications of the proposed location.

FINANCIAL IMPACT: The applicant will pay a fee of $1,500.00

RECOMMENDATION:

The Planning & Development approved the application subject to additional information not contradicting the applicant's statements.
The Sheriff's Office approved the application subject to additional information not contradicting applicant's statements.

Note: The staff report includes the information available approximately two weeks prior to the Public Services Committee meeting. It represents an evaluation of the facts presented by the applicant, research done by the staff, and consideration of the relevant factors in the Comprehensive Zoning Ordinance and the Alcohol Ordinance of Augusta, Georgia. New facts may emerge, and staff reserves the right to make an oral recommendation at the hearing based on all the information available at that time.

COPY

Augusta-Richmond County Planning & Development Department
1803 Marvin Griffin Road
Augusta, GA. 30906

ALCOHOL BEVERAGE APPLICATION

Alcohol Number _____ Year _____ Alcohol Account Number _____

1. Name of Business SECOND CITY DISTILLING
2. Business Address 4 8th STREET
3. City AUGUSTA State GA Zip 30901
4. Business Phone (706) 214.2288 Home Phone (706) 832.7700
5. Applicant Name and Address: DAVID HOPKINS
435 CAMBRIDGE CIRCLE
MARTINEZ, GA 30907
6. Applicant Social Security # 426.57.6831 D.O.B. 4.7.81
7. If Application is a transfer, list previous Applicant: _____
8. Business Location: Map & Parcel 037-3-013-00-0 Zoning COMMERCIAL
9. Location Manager(s) _____
10. Is Applicant an American Citizen or Alien lawfully admitted for permanent residency?
(X) Yes( ) No

OWNERSHIP INFORMATION

11. Corporation (if applicable): Date Chartered: APRIL 2016
12. Mailing Address:
Name of Business SECOND CITY DISTILLING
Attention DINO DAKKARAS
Address 4 8th ST. AUGUSTA, GA
City/State/Zip AUGUSTA, GA 30901
13. Ownership Type: (✓) Corporation ( ) Partnership ( ) Individual
14. Corporate Name: CMD, LLC DBA SECOND CITY DISTILLING
List name and other required information for each person having interest in this business.

Name	Position	SSNO#	Address	Interest
RAY CARNES	OWNER	260.45.3209	811 PENINSULA COURT EVANS, GA 30809	85%
DAVID HOPKINS	OWNER	426.57.6831	435 CAMBRIDGE CI. MARTINEZ, GA 30907	15%

15. What type of business will you operate in this location?
( ) Restaurant - Full ( ) Lounge ( ) Convenience Store
( ) Restaurant – Limited ( ) Package Store ( ) Hybrid
(X) Other: TASTING ROOM
NANO Distillery

License Information	Liquor	Beer	Wine	Dance	Sunday Sales
Retail Package Dealer					
Consumption on Premises					
Wholesale					

Total License Fee: $ _____
Prorated License Fee: (After July 1 ONLY) $ _____

16. Have you ever applied for an Alcohol Beverage License before: NO
If so, give year of application and its disposition: _____

17. Are you familiar with Georgia and Augusta-Richmond County laws regarding the sale of alcoholic beverages? (X) Yes ( ) No If so, please initial DH

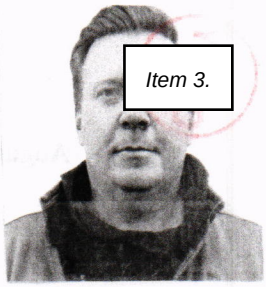

18. Attach a passport-size photograph (front view) taken within two years. Write name on back of the dealer submitting the license application.

19. Has any liquor business in which you hold, or have held, any financial interest, or are employed, or have been employed, ever been cited for any violation of the rules and regulations of Augusta=-Richmond County or the State Revenue Commission relating to the sale and distribution of distilled spirits? ( ) Yes (X) No
If yes, give full details: _____

20. Have you ever been arrested, or held by Federal, State, or other law-enforcement authorities, for any violation of any Federal, State, County or Municipal law, regulation or ordinance: (Do not include traffic violations, with the exception of any offenses pertaining to alcohol or drugs). All other charges must be included, even if they are dismissed. ( ) Yes (X) No
If yes, give reason charged or held, date and place where charged and its disposition.

21. List owner or owners of building and property.
MORRIS COMMUNICATIONS CO.

22. List the name and other required information for each person, firm or corporation having any interest in the business.

RAYMOND CARNES

23. If a new application, attach a surveyor's plat and state the straight line distance from the property line of school, church, library, or public recreation area to the wall of the building where alcohol beverages are sold.
A) Church _____ C) School _____
B) Library _____ D) Public Recreation _____

24. State of Georgia, Augusta-Richmond County, I, DAVID HOPKINS
Do solemnly sear, subject to the penalties of false swearing, that the statements and answers made by me as the applicant in the forgoing alcoholic beverage application are true.

Applicant Signature

25. I hereby certify that David Hopkins is personally known to be, That he/she signed his/her name to the forgoing allocation stating to me that he/she knew and understood all statements and answers made herein, and, under oath actually administered by me, has sworn that said statements and answers are true.
This 2 day of December, in the year 2022

Notary Public

HALEY CHRISTOPHER PUBLIC COLUMBIA COUNTY GEORGIA EXPIRES Mar. 16, 2026

FOR OFFICE USE ONLY

Department Recommendation	Approve	Deny	Comments
Alcohol Inspector			
Sheriff			
Fire Inspector			

The Board of Commissioners on the _____ day of _____, in the year _____.
(Approved, Disapproved) the forgoing application

Administrator _____ Date _____

Commission Meeting

March 7, 2023

Alcohol Application

Department:	Planning & Development Department
Presenter:	Julietta H. Walton-Business License & Customer Service Manager
Caption:	Motion to **approve Existing Location: A.N. 23-09:** A request by Jennifer Marshall for an on-premises consumption **Liquor & Beer** License to be used in connection with K & J Soulbar and Grill located at 720 E Robinson Ave. Ste 101-102. There will Be **Sunday Sales.** District 3. Super District 10. **(Approved by Public Services Committee February 28, 2023)**
Background:	This is an Existing Location.
Analysis:	The applicant meets the requirements of the City of Augusta's Alcohol Ordinance.
Financial Impact:	The applicant will pay a fee of $4,985.00.
Alternatives:	N/A
Recommendation:	The Planning & Development approved the application subject to additional information not contradicting the applicant's statements. The Sheriff's Office approved the application subject to additional information not contradicting applicant's statements.
Funds are available in the following accounts:	N/A
REVIEWED AND APPROVED BY:	N/A

Case Number: A.N. 23-09

Application Type: Consumption on Premise Liquor, Beer & Sunday Sales

Business Name: K & J Soulbar and Grill

Hearing Date: February 28, 2023

Report Prepared By: Julietta H. Walton, Business License & Customer Service Manager

---

Applicant: *Jennifer Marshall*

Property Owner: Shank, Inc

Address of Property: 720 E. Robinson Ave Ste 101-102

Tax Parcel #: 078-0-177-00-0

Commission District: District: 3 Super District: 10

Background: Existing Location

ANALYSIS: Location restrictions: zoning and proximity to churches, libraries, schools, and public recreation areas.

- **Zoning:** B-2 (General Business) Zone
- D**istance Requirements**: The proposed location for consumption on premise Liquor, Beer & Sunday Sales meets the minimum distance location to churches, schools, libraries, and public recreation areas.

ADDITIONAL CONSIDERATIONS:

- **Reputation, character**. The applicant's reputation, character, trade and business associations or past business ventures, mental and physical capacity to conduct business.
- **Previous violations of liquor laws**. If the applicant is a previous holder of a license to sell alcoholic liquors, whether or not he has violated any laws, regulations or ordinance relating to such business.
- **Manner of conducting prior liquor business**. If the applicant is a previous holder of a license to sell alcoholic liquors, the manner in which he conducted the business thereunder especially as to the necessity for unusual police observation and inspection in order to prevent the violation of any law, regulation or ordinance relating to such business.

- **Location**. The location for which the license is sought, as to traffic congestion, general character of neighborhood, and the effect such an establishment would have on the adjacent surrounding property values.
    - **The proposed location is an Existing Location.**
- **Number of licenses in a trading area**. The number of licenses already granted for similar business in the trading area of the place for which the license is sought.
- **Dancing**. If dancing is to be permitted upon the premise for which the license is sought and the applicant has previously permitted dancing upon the premises controlled or supervised by him, the manner in which he controlled or supervised such dancing to prevent any violation of any law, regulation, or ordinance.
- **Previous revocation of license**. If the applicant is a person, whose license issued under the police powers of any governing authority has been previously suspended or revoked or who has previously had an alcoholic beverages licenses suspended or revoked. Payment of taxes. If the applicant and business are not delinquent in the payment of any local taxes.
- **Congregation of minors**. Any circumstances, which may cause minors to congregate in the vicinity of the proposed location, even if the location meets the distance requirement under section 6-2-64 (b) herein.
- **Prior incidents**. Evidence that a substantial number of incidents requiring police intervention have occurred within a square city block of the proposed location during the twelve (12) months immediately preceding the date of application.
- **Previous Denial or Revocation**. The denial of an application or revocation of a license, occurring within the preceding twelve (12) months, which was based on the qualifications of the proposed location.

FINANCIAL IMPACT: The applicant will pay a fee of $4,985.00.

RECOMMENDATION:

The Planning & Development approved the application subject to additional information not contradicting the applicant's statements.
The Sheriff's Office approved the application subject to additional information not contradicting applicant's statements.

Note: The staff report includes the information available approximately two weeks prior to the Public Services Committee meeting. It represents an evaluation of the facts presented by the applicant, research done by the staff, and consideration of the relevant factors in the Comprehensive Zoning Ordinance and the Alcohol Ordinance of Augusta, Georgia. New facts may emerge, and staff reserves the right to make an oral recommendation at the hearing based on all the information available at that time.

COPY

Augusta-Richmond County Planning & Development Department
1803 Marvin Griffin Road
Augusta, GA. 30906

ALCOHOL BEVERAGE APPLICATION

Alcohol Number _____ Year _____ Alcohol Account Number _____

1. Name of Business K & J Soulbar and Grill
2. Business Address 720 East Robinson Avenue
3. City Grovetown State GA Zip 30813
4. Business Phone (706) 910-5606 Home Phone (706) 619-8303
5. Applicant Name and Address: Jennifer Marshall
   2015 HATTON Court
   Augusta, GA 30909
6. Applicant Social Security # _____ D.O.B. _____
7. If Application is a transfer, list previous Applicant:
   _____
8. Business Location: Map & Parcel _____ Zoning _____
9. Location Manager(s) _____
   _____
10. Is Applicant an American Citizen or Alien lawfully admitted for permanent residency?
    (X) Yes( ) No

OWNERSHIP INFORMATION

11. Corporation (if applicable): Date Chartered: _____
12. Mailing Address:
    Name of Business K & J Soulbar and Grill
    Attention _____
    Address 720 East Robinson Avenue
    City/State/Zip Grovetown, Georgia 30813
13. Ownership Type: ( ) Corporation ( ) Partnership (✓) Individual
14. Corporate Name: _____
    List name and other required information for each person having interest in this business.

Name	Position	SSNO#	Address	Interest
Jennifer Marshall	Owner		2015 Hatton Court Augusta GA	100%

15. What type of business will you operate in this location?
    ( ) Restaurant - Full ( ) Lounge ( ) Convenience Store
    (✓) Restaurant – Limited ( ) Package Store ( ) Hybrid
    ( ) Other: _____

License Information	Liquor	Beer	Wine	Dance	Sunday Sales
Retail Package Dealer					
Consumption on Premises	✓	✓			✓
Wholesale					

Total License Fee: $ _____
Prorated License Fee: (After July 1 ONLY) $ _____

16. Have you ever applied for an Alcohol Beverage License before: NO
    If so, give year of application and its disposition: _____

17. Are you familiar with Georgia and Augusta-Richmond County laws regarding the sale of alcoholic beverages? (✓) Yes ( ) No If so, please initial _____

18. Attach a passport-size photograph (front view) taken within two years. Write name on back of the dealer submitting the license application.

19. Has any liquor business in which you hold, or have held, any financial interest, or are employed, or have been employed, ever been cited for any violation of the rules and regulations of Augusta=-Richmond County or the State Revenue Commission relating to the sale and distribution of distilled spirits? ( ) Yes (✓) No
If yes, give full details: _____

20. Have you ever been arrested, or held by Federal, State, or other law-enforcement authorities, for any violation of any Federal, State, County or Municipal law, regulation or ordinance: (Do not include traffic violations, with the exception of any offenses pertaining to alcohol or drugs). All other charges must be included, even if they are dismissed. ( ) Yes (✓) No
If yes, give reason charged or held, date and place where charged and its disposition.

21. List owner or owners of building and property. Niren Patel

22. List the name and other required information for each person, firm or corporation having any interest in the business. Melvin Marshall

23. If a new application, attach a surveyor's plat and state the straight line distance from the property line of school, church, library, or public recreation area to the wall of the building where alcohol beverages are sold.
A) Church _____ C) School _____
B) Library _____ D) Public Recreation _____

24. State of Georgia, Augusta-Richmond County, I, Jennifer Marshall
Do solemnly sear, subject to the penalties of false swearing, that the statements and answers made by me as the applicant in the forgoing alcoholic beverage application are true.

Applicant Signature

25. I hereby certify that Jennifer Marshall is personally known to be, That he/she signed his/her name to the forgoing allocation stating to me that he/she knew and understood all statements and answers made herein, and, under oath actually administered by me, has sworn that said statements and answers are true.
This 22 day of _____, in the year 2022

James W Rules
Notary Public

JAMES W. RULES NOTARY EXPIRES GEORGIA June 1, 2024 RICHMOND COUNTY

JAMES W. RULES NOTARY EXPIRES GEORGIA June 1, 2024 PUBLIC RICHMOND COUNTY

FOR OFFICE USE ONLY

Department Recommendation	Approve	Deny	Comments
Alcohol Inspector			
Sheriff			
Fire Inspector			

The Board of Commissioners on the _____ day of _____, in the year _____.
(Approved, Disapproved) the forgoing application

Administrator _____ Date _____

Commission Meeting

March 7, 2023

Motion to approve the donation of two sculptures for a public art installation

Department:	Parks & Recreation Department
Presenter:	Maurice McDowell
Caption:	Motion to **approve** the donation of two sculptures for a public art installation at the central island of the roundabout North Leg Road / Milledgeville Road. **(Approved by Public Services Committee February 28, 2023)**
Background:	Nelson A. Danish is donating two sculptures by Roger Finch. The Public Art Advisory Panel has recommended for the two sculptures to be placed in the center of the roundabout as public art installation.
Analysis:	Adding the sculptures would increase Augusta's Public Art portfolio and improve the attractiveness of the area.
Financial Impact:	The sculptures are being donated. Augusta will be responsible for maintenance of the sculptures.
Alternatives:	1. To move to approve 2. To move to no action
Recommendation:	1. To move to approve
Funds are available in the following accounts:	N/A
REVIEWED AND APPROVED BY:	N/A

AUGUSTA, GEORGIA

AND

NELSON A. DANISH

SERVICE AGREEMENT AND TRANSFER OF OWNERSHIP

THIS SERVICE AGREEMENT AND TRANSFER OF OWNERSHIP ("AGREEMENT") is made and entered into this 30th day of JANUARY, 2023, (the "Effective Date") between Augusta, Georgia ("Augusta"), a political subdivision of the State of Georgia, and Nelson A. Danish ("Donor"), known collectively as the "Parties," for the transfer of ownership of a piece of publicly installed artwork (the "sculpture") from the Donor to Augusta, as well as services and maintenance of those sculpture.

NOW, THEREFORE, IN CONSIDERATION OF THE MUTUAL PROMISES DESCRIBED IN THIS AGREEMENT, THE ADEQUACY AND SUFFICIENCY OF WHICH EACH PARTY ACKNOWLEDGES, EACH OF THE PARTIES AGREE AS FOLLOWS:

1. Scope. This Agreement shall involve a publically installed piece of artwork, its ownership, maintenance, and intellectual property:

    a. "Tumbler", by Roger Finch, currently owned by Nelson A. Danish. (1985). In steel.

2. Ownership and Rights Related to the Sculpture.

    a. Ownership of the sculpture shall pass to Augusta upon execution of this Agreement. The Donor hereby irrevocably assign, convey, and otherwise transfer to Augusta and its respective successors and assigns title to the sculpture.

    b. Augusta may reproduce images for non-commercial, educational, government, and promotional purposes, with credit given to the original Artists of the sculpture when such sculpture is highlighted, to the extent practical. The reproduction shall be royalty-free and irrevocable and able to be used across multiple medias, including digital and electronic media and printed media. These reproductions may be used in, but not limited to, the following manner:

        i. The display of the sculpture on Augusta's website(s), social media pages, informational brochures, and other promotional materials in print and over the internet.

ii. Sublicensing the rights granted herein to third parties in furtherance of non-commercial, educational, government, or promotional purposes.

3. Responsibilities of Augusta.

a. Augusta shall receive ownership of the sculpture. Augusta shall be solely responsible for all matters involving the ownership of the sculpture, including installation, upkeep, maintenance, insurance, and repair.

b. Augusta shall be solely responsible and liable for any costs related to the relocation of the sculpture after the Effective Date of this Agreement.

c. Augusta shall notify the Donor in any case of removal or relocation of any of the sculpture. Such notification shall occur at the earliest reasonable time. Augusta shall permit the Donor to submit guidance regarding removal, relocation, and re-installation. Such guidance may include, but is not limited to, proper transportation of the sculpture or preferential locations for re-installation. Augusta shall consult with the Donor during activities under this sub-paragraph.

d. Augusta shall maintain the sculpture in a manner appropriate for their use as public art, in the sole discretion of Augusta's appropriate department. Augusta shall provide such staff time, expertise, and equipment for the maintenance, protection, and cleaning of the sculpture, as is appropriate for the sculpture in the sole discretion of Augusta.

e. Augusta shall produce, within one (1) calendar year of this Agreement, a plaque or other indicator identifying information regarding the sculpture, in accordance with the stipulations of the purchasers/donors of the artwork, and permanently affix said plaque to their respective sculpture.

f. Augusta shall develop a maintenance, repair, and upkeep plan.

g. Augusta may create and operate a maintenance fund for public art upkeep. Augusta may, in their discretion, use the aforementioned fund in the maintenance of the sculpture.

4. Notices.

a. Notices shall be in writing and dated to the postmarks of the notices, to the addresses as specified on the signature page.

5. Indemnification

a. Nothing in this Agreement shall constitute a waiver of Augusta's sovereign immunity, by contract or otherwise.

b. Augusta nor the Donor shall be liable to the other or shall make any claim for any incident, indirect, or consequential damages arising out of, or connected in any way to the this Agreement.

6. Valuations

a. Augusta agrees that the following shall be the agreed-upon appraised value and insurance value for the sculpture:

i. Tumbler, by Roger Finch

1. Purchase Price: $800.00

2. Insurance value: $800.00.

7. Warranties by the Donor

a. The sculpture is professionally constructed of durable materials appropriate for outdoor public display.

b. The sculpture can be structurally secured to a concrete pad with anchor bolts or similar devices.

c. Installation of the sculpture will not irreparably damage, destroy, or materially alter the sculpture.

d. The sculpture was solely the result of the artistic effort of the original Artists, they are unique and original and do not infringe upon any copyright or the rights of any person, that no person has sold, assigned, transferred, licensed, granted, encumbered or utilized the sculpture or any element thereof or any copyright related thereto which may affect or impair the rights granted pursuant to this Agreement, and that the sculpture is free and clear of any liens from any source whatsoever.

8. Right of First Refusal.

a. Should Augusta decide to sell or donate the sculpture, the Commission will vote to allow for the sale and/or donation of the sculpture. The Donor shall have the right of first refusal to any sale or donation of the sculpture. Such right of first refusal shall be exercised by written notice to Augusta within thirty days of written notification by Augusta. If Donor elect to exercise its right of first refusal, they shall pay all costs associated with removal and relocation of the sculpture. If Augusta decides to donate or sell the sculpture, the donee or buyer of the sculpture will assume all of Augusta's duties toward the Donor stated herein, will be obligated to defend and indemnify Augusta with respect to such duties, and will take the sculpture subject to all of the Donor' rights as stated herein. The donee or buyer shall be given a copy of this executed Agreement at the time of the donation or

sale. In the event the Donor does not exercise their right of first refusal, Augusta may proceed to sell or donate the sculpture.

9. General Terms.

a. The laws of the State of Georgia shall govern the Agreement between Augusta and the Donor with regard to its interpretation and performance, and any other claims related to this Agreement. All claims, disputes, and other matters in question between Augusta and the Donor arising out of relating to the Agreement, or the breach thereof, shall be decided in the Superior Court of Richmond County, Georgia. Donor, by executing this Agreement, specifically consent to jurisdiction and venue in Richmond County and waive any right to contest the jurisdiction and venue in the Superior Court of Richmond County, Georgia.

b. Neither Augusta nor the Donor shall assign, sublet, or transfer their interest in this Agreement without the written consent of the other.

c. The Donor shall not be required to sign any document, no matter by whom requested, that would result in the Donor having to certify, guaranty, or warrant the existence of conditions that the Donor cannot ascertain.

d. Nothing contained in this Agreement shall create a contractual relationship with, or a cause of action in favor of, a third party against Augusta.

e. Georgia Prompt Pay Act. The terms of this Agreement superseded any and all provisions of the Georgia Prompt Pay Act.

f. The Donor acknowledge that this contract and any changes to it by amendment, modification, change order, or other similar document may have required or may require the legislative authorization of the Board of Commissioners and approval of the Mayor. Under Georgia law, the Donor are deemed to possess knowledge concerning Augusta, Georgia's ability to assume contractual obligations and the consequences of the Donor' provision of goods or services to Augusta, Georgia under an unauthorized contract, amendment, modification, change order, or other similar document, including the possibility that the Donor may be precluded from recovering payment for such unauthorized goods or services. Accordingly, the Donor agree that if it provides goods or services to Augusta, Georgia under a contract that has not received proper legislative authorization or if the Donor provide goods or services to Augusta, Georgia in excess of the any contractually authorized goods or services, as required by Augusta, Georgia's Charter and Code, Augusta, Georgia may withhold payment for any unauthorized goods or services provided by the Donor. The Donor assume all risk of non-payment for the provision of any unauthorized goods or services to Augusta, Georgia, and waive all claims to payment or to other remedies for the provision of any unauthorized goods or services to

Augusta, Georgia, however characterized, including, without limitation, all remedies at law or equity.

g. Augusta, Georgia may unilaterally, upon written notice, demand that a temporary and immediate stopping of the work under this Agreement be done.

h. Force Majeure. "Force Majeure Event" means any act or event that (a) prevents a party (the "Nonperforming Party") from performing its obligations or satisfying a condition to the other party's (the "Performing Party") obligations under this Agreement, (b) is beyond the reasonable control of and not the fault of the Nonperforming Party, and (c) the Nonperforming Party has not, through commercially reasonable efforts, been able to avoid or overcome. If a Force Majeure Event occurs, the Nonperforming Party is excused from the performance thereby prevented and from satisfying any conditions precedent to the other party's performance that cannot be satisfied, in each case to the extent limited or prevented by the Force Majeure Event. When the Nonperforming Party is able to resume its performance or satisfy the conditions precedent to the other party's obligations, the Nonperforming Party shall immediately resume performance under this Agreement. The relief offered by this paragraph is the exclusive remedy available to the Performing Party with respect to a Force Majeure Event. A Force Majeure Event includes, but is not limited to: epidemics, pandemics, declared national, state, and local states of emergency, hurricanes, tornadoes, floods, severe and unexpected acts of nature, or the availability of funds in the budget of Augusta.

i. All contractors and subcontractors entering into contracts with Augusta, Georgia for the physical performance of services shall be required to execute an Affidavit verifying its compliance with O.C.G.A. § 13-10-91, stating affirmatively that the individual, firm, or corporation that is contracting with Augusta, Georgia has registered with and is participating in a federal work authorization program. All contractors and subcontractors must provide their E-Verify number and must be in compliance with the electronic verification of work authorized programs operated by the United States Department of Homeland Security or any equivalent federal work authorization program operated by the United States Department of Homeland Security to verify information of newly hired employees, pursuant to the Immigration Reform and Control Act of 1986 (IRCA), P.L. 99-603, in accordance with the applicability provisions and deadlines established in O.C.G.A. § 13-10-91 and shall continue to use the federal authorization program throughout the contract term. All contractors shall further agree that, should it employ or contract with any subcontractor(s) in connection with the physical performance of services pursuant to its contract with Augusta, Georgia the contractor will secure from such subcontractor(s) each subcontractor's E-Verify number as evidence of verification of compliance with O.C.G.A. § 13-10-91 on the subcontractor affidavit

provided in Rule 300-10-01-.08 or a substantially similar form. All contractors shall further agree to maintain records of such compliance and provide a copy of each such verification to Augusta, Georgia at the time the subcontractor(s) is retained to perform such physical services.

j. Entire Agreement. This Agreement constitutes the final agreement between the parties. It is the complete and exclusive expression of the parties' agreement on the matters contained in this Agreement. All prior and contemporaneous negotiations and agreements between the parties on the matters contained in this Agreement are expressly merged into and superseded by this Agreement. The provisions of this Agreement cannot be explained, supplemented or qualified through evidence of trade usage or a prior course of dealings. In entering into this Agreement, neither party has relied upon any statement, representation, warranty or agreement of any other party except for those expressly contained in this Agreement. There are no conditions precedent to the effectiveness of this Agreement, other than any that are expressly stated in this Agreement. This Agreement may be amended only by written instrument signed both by Augusta and the Donor.

k. Severability. If any term or provision of this Agreement is held invalid or unenforceable, the remainder of this Agreement will be considered valid and enforceable to the fullest extent permitted by law.

IN WITNESS WHEREOF, the Parties state and affirm that they are duly authorized to bind the respected entities designated below as of the day and year indicated.

[SIGNATURES ON THE FOLLOWING PAGE]

IN WITNESS WHEREOF, a duly authorized representative of each party has executed this Agreement as of the date(s) set forth below.

Donor

By: _____

Name: Nelson A. Danish

Title: Donor

Date: 1/30/2023

Augusta, Georgia

By: _____

Name: Garnett Johnson

Title: Mayor

Date: _____

Attest: _____
Lena J. Bonner, Clerk of Commission

Address for Notices:
P.O. Box 8164
N. Aug., SC 29861-8164
(803) 279-6502
Attention: _____

Address for Notices:
Augusta, Georgia
535 Telfair Street, Suite 200
Augusta, GA 30901
Attention: Mayor Garnett Johnson

With copies to:
Maurice McDowell, Director
Augusta PRD
2027 Lumpkin Rd
Augusta GA 30906

General Counsel
Augusta Law Department
535 Telfair Street, Bldg 3000
Augusta, GA 30901

AUGUSTA, GEORGIA

AND

NELSON A. DANISH

SERVICE AGREEMENT AND TRANSFER OF OWNERSHIP

THIS SERVICE AGREEMENT AND TRANSFER OF OWNERSHIP ("AGREEMENT") is made and entered into this 30th day of JANUARY, 2023, (the "Effective Date") between Augusta, Georgia ("Augusta"), a political subdivision of the State of Georgia, and Nelson A. Danish ("Donor"), known collectively as the "Parties," for the transfer of ownership of a piece of publicly installed artwork (the "sculpture") from the Donor to Augusta, as well as services and maintenance of those sculpture.

NOW, THEREFORE, IN CONSIDERATION OF THE MUTUAL PROMISES DESCRIBED IN THIS AGREEMENT, THE ADEQUACY AND SUFFICIENCY OF WHICH EACH PARTY ACKNOWLEDGES, EACH OF THE PARTIES AGREE AS FOLLOWS:

1. Scope. This Agreement shall involve a publically installed piece of artwork, its ownership, maintenance, and intellectual property:

    a. "Windsong", by Roger Finch, currently owned by Nelson A. Danish. (1988). In steel.

2. Ownership and Rights Related to the Sculpture.

    a. Ownership of the sculpture shall pass to Augusta upon execution of this Agreement. The Donor hereby irrevocably assign, convey, and otherwise transfer to Augusta and its respective successors and assigns title to the sculpture.

    b. Augusta may reproduce images for non-commercial, educational, government, and promotional purposes, with credit given to the original Artists of the sculpture when such sculpture is highlighted, to the extent practical. The reproduction shall be royalty-free and irrevocable and able to be used across multiple medias, including digital and electronic media and printed media. These reproductions may be used in, but not limited to, the following manner:

        i. The display of the sculpture on Augusta's website(s), social media pages, informational brochures, and other promotional materials in print and over the internet.

ii. Sublicensing the rights granted herein to third parties in furtherance of non-commercial, educational, government, or promotional purposes.

3. Responsibilities of Augusta.

a. Augusta shall receive ownership of the sculpture. Augusta shall be solely responsible for all matters involving the ownership of the sculpture, including installation, upkeep, maintenance, insurance, and repair.

b. Augusta shall be solely responsible and liable for any costs related to the relocation of the sculpture after the Effective Date of this Agreement.

c. Augusta shall notify the Donor in any case of removal or relocation of any of the sculpture. Such notification shall occur at the earliest reasonable time. Augusta shall permit the Donor to submit guidance regarding removal, relocation, and re-installation. Such guidance may include, but is not limited to, proper transportation of the sculpture or preferential locations for re-installation. Augusta shall consult with the Donor during activities under this sub-paragraph.

d. Augusta shall maintain the sculpture in a manner appropriate for their use as public art, in the sole discretion of Augusta's appropriate department. Augusta shall provide such staff time, expertise, and equipment for the maintenance, protection, and cleaning of the sculpture, as is appropriate for the sculpture in the sole discretion of Augusta.

e. Augusta shall produce, within one (1) calendar year of this Agreement, a plaque or other indicator identifying information regarding the sculpture, in accordance with the stipulations of the purchasers/donors of the artwork, and permanently affix said plaque to their respective sculpture.

f. Augusta shall develop a maintenance, repair, and upkeep plan.

g. Augusta may create and operate a maintenance fund for public art upkeep. Augusta may, in their discretion, use the aforementioned fund in the maintenance of the sculpture.

4. Notices.

a. Notices shall be in writing and dated to the postmarks of the notices, to the addresses as specified on the signature page.

5. Indemnification

a. Nothing in this Agreement shall constitute a waiver of Augusta's sovereign immunity, by contract or otherwise.

b. Augusta nor the Donor shall be liable to the other or shall make any claim for any incident, indirect, or consequential damages arising out of, or connected in any way to the this Agreement.

6. Valuations

a. Augusta agrees that the following shall be the agreed-upon appraised value and insurance value for the sculpture:

i. Windsong, by Roger Finch

1. Purchase Price: $3,500.00

2. Insurance value: $3,500.00.

7. Warranties by the Donor

a. The sculpture is professionally constructed of durable materials appropriate for outdoor public display.

b. The sculpture can be structurally secured to a concrete pad with anchor bolts or similar devices.

c. Installation of the sculpture will not irreparably damage, destroy, or materially alter the sculpture.

d. The sculpture was solely the result of the artistic effort of the original Artists, they are unique and original and do not infringe upon any copyright or the rights of any person, that no person has sold, assigned, transferred, licensed, granted, encumbered or utilized the sculpture or any element thereof or any copyright related thereto which may affect or impair the rights granted pursuant to this Agreement, and that the sculpture is free and clear of any liens from any source whatsoever.

8. Right of First Refusal.

a. Should Augusta decide to sell or donate the sculpture, the Commission will vote to allow for the sale and/or donation of the sculpture. The Donor shall have the right of first refusal to any sale or donation of the sculpture. Such right of first refusal shall be exercised by written notice to Augusta within thirty days of written notification by Augusta. If Donor elect to exercise its right of first refusal, they shall pay all costs associated with removal and relocation of the sculpture. If Augusta decides to donate or sell the sculpture, the donee or buyer of the sculpture will assume all of Augusta's duties toward the Donor stated herein, will be obligated to defend and indemnify Augusta with respect to such duties, and will take the sculpture subject to all of the Donor' rights as stated herein. The donee or buyer shall be given a copy of this executed Agreement at the time of the donation or

sale. In the event the Donor does not exercise their right of first refusal, Augusta may proceed to sell or donate the sculpture.

9. General Terms.

a. The laws of the State of Georgia shall govern the Agreement between Augusta and the Donor with regard to its interpretation and performance, and any other claims related to this Agreement. All claims, disputes, and other matters in question between Augusta and the Donor arising out of relating to the Agreement, or the breach thereof, shall be decided in the Superior Court of Richmond County, Georgia. Donor, by executing this Agreement, specifically consent to jurisdiction and venue in Richmond County and waive any right to contest the jurisdiction and venue in the Superior Court of Richmond County, Georgia.

b. Neither Augusta nor the Donor shall assign, sublet, or transfer their interest in this Agreement without the written consent of the other.

c. The Donor shall not be required to sign any document, no matter by whom requested, that would result in the Donor having to certify, guaranty, or warrant the existence of conditions that the Donor cannot ascertain.

d. Nothing contained in this Agreement shall create a contractual relationship with, or a cause of action in favor of, a third party against Augusta.

e. Georgia Prompt Pay Act. The terms of this Agreement superseded any and all provisions of the Georgia Prompt Pay Act.

f. The Donor acknowledge that this contract and any changes to it by amendment, modification, change order, or other similar document may have required or may require the legislative authorization of the Board of Commissioners and approval of the Mayor. Under Georgia law, the Donor are deemed to possess knowledge concerning Augusta, Georgia's ability to assume contractual obligations and the consequences of the Donor' provision of goods or services to Augusta, Georgia under an unauthorized contract, amendment, modification, change order, or other similar document, including the possibility that the Donor may be precluded from recovering payment for such unauthorized goods or services. Accordingly, the Donor agree that if it provides goods or services to Augusta, Georgia under a contract that has not received proper legislative authorization or if the Donor provide goods or services to Augusta, Georgia in excess of the any contractually authorized goods or services, as required by Augusta, Georgia's Charter and Code, Augusta, Georgia may withhold payment for any unauthorized goods or services provided by the Donor. The Donor assume all risk of non-payment for the provision of any unauthorized goods or services to Augusta, Georgia, and waive all claims to payment or to other remedies for the provision of any unauthorized goods or services to

Augusta, Georgia, however characterized, including, without limitation, all remedies at law or equity.

g. Augusta, Georgia may unilaterally, upon written notice, demand that a temporary and immediate stopping of the work under this Agreement be done.

h. Force Majeure. "Force Majeure Event" means any act or event that (a) prevents a party (the "Nonperforming Party") from performing its obligations or satisfying a condition to the other party's (the "Performing Party") obligations under this Agreement, (b) is beyond the reasonable control of and not the fault of the Nonperforming Party, and (c) the Nonperforming Party has not, through commercially reasonable efforts, been able to avoid or overcome. If a Force Majeure Event occurs, the Nonperforming Party is excused from the performance thereby prevented and from satisfying any conditions precedent to the other party's performance that cannot be satisfied, in each case to the extent limited or prevented by the Force Majeure Event. When the Nonperforming Party is able to resume its performance or satisfy the conditions precedent to the other party's obligations, the Nonperforming Party shall immediately resume performance under this Agreement. The relief offered by this paragraph is the exclusive remedy available to the Performing Party with respect to a Force Majeure Event. A Force Majeure Event includes, but is not limited to: epidemics, pandemics, declared national, state, and local states of emergency, hurricanes, tornadoes, floods, severe and unexpected acts of nature, or the availability of funds in the budget of Augusta.

i. All contractors and subcontractors entering into contracts with Augusta, Georgia for the physical performance of services shall be required to execute an Affidavit verifying its compliance with O.C.G.A. § 13-10-91, stating affirmatively that the individual, firm, or corporation that is contracting with Augusta, Georgia has registered with and is participating in a federal work authorization program. All contractors and subcontractors must provide their E-Verify number and must be in compliance with the electronic verification of work authorized programs operated by the United States Department of Homeland Security or any equivalent federal work authorization program operated by the United States Department of Homeland Security to verify information of newly hired employees, pursuant to the Immigration Reform and Control Act of 1986 (IRCA), P.L. 99-603, in accordance with the applicability provisions and deadlines established in O.C.G.A. § 13-10-91 and shall continue to use the federal authorization program throughout the contract term. All contractors shall further agree that, should it employ or contract with any subcontractor(s) in connection with the physical performance of services pursuant to its contract with Augusta, Georgia the contractor will secure from such subcontractor(s) each subcontractor's E-Verify number as evidence of verification of compliance with O.C.G.A. § 13-10-91 on the subcontractor affidavit

provided in Rule 300-10-01-.08 or a substantially similar form. All contractors shall further agree to maintain records of such compliance and provide a copy of each such verification to Augusta, Georgia at the time the subcontractor(s) is retained to perform such physical services.

j. Entire Agreement. This Agreement constitutes the final agreement between the parties. It is the complete and exclusive expression of the parties' agreement on the matters contained in this Agreement. All prior and contemporaneous negotiations and agreements between the parties on the matters contained in this Agreement are expressly merged into and superseded by this Agreement. The provisions of this Agreement cannot be explained, supplemented or qualified through evidence of trade usage or a prior course of dealings. In entering into this Agreement, neither party has relied upon any statement, representation, warranty or agreement of any other party except for those expressly contained in this Agreement. There are no conditions precedent to the effectiveness of this Agreement, other than any that are expressly stated in this Agreement. This Agreement may be amended only by written instrument signed both by Augusta and the Donor.

k. Severability. If any term or provision of this Agreement is held invalid or unenforceable, the remainder of this Agreement will be considered valid and enforceable to the fullest extent permitted by law.

IN WITNESS WHEREOF, the Parties state and affirm that they are duly authorized to bind the respected entities designated below as of the day and year indicated.

[SIGNATURES ON THE FOLLOWING PAGE]

IN WITNESS WHEREOF, a duly authorized representative of each party has executed this Agreement as of the date(s) set forth below.

Donor

By: _____

Name: Nelson A. Danish

Title: Donor

Date: 1/30/2025

Augusta, Georgia

By: _____

Name: Garnett Johnson

Title: Mayor

Date: _____

Attest: _____
Lena J. Bonner, Clerk of Commission

Address for Notices:
P. O. Box 8164
N. Aug., SC 29861-8164
(803) 279-6502
Attention: _____

Address for Notices:
Augusta, Georgia
535 Telfair Street, Suite 200
Augusta, GA 30901
Attention: Mayor Garnett Johnson

With copies to:
Maurice McDowell, Director
Augusta PRD
2027 Lumpkin Rd
Augusta GA 30906

General Counsel
Augusta Law Department
535 Telfair Street, Bldg 3000
Augusta, GA 30901

Commission Meeting

March 7, 2023

Contract with Departure Media, Inc. for In-Terminal Advertising Program at Augusta Regional Airport

---

Department:	Augusta Regional Airport
Presenter:	Herbert Judon
Caption:	Motion to **approve** a five-year contract with Departure Media, Inc. for In-Terminal Advertising program at Augusta Regional Airport. Approved by the Augusta Aviation Commission on January 26, 2023. **(RFP 22-253)** The contract had an initial term of five (5) years with no options for renewal **(Approved by Public Services Committee February 28, 2023)**
Background:	The Airport entered into a contract with Departure Media, Inc., in 2018, to handle the In-terminal advertising concession. The contract had an initial term of five (5) years with no options for renewal. As the contract came up on its expiration date, Airport staff went out for bid on the service and received one response from the current concessionaire. Procurement and Airport staff evaluated the proposal and determined that the Departure Media proposal was acceptable.
Analysis:	Airport staff is recommending selection of Departure Media, Inc. (DMI), to operate the Airport In-terminal Concession Program. DMI has accepted and signed the concession agreement. The agreement is for a five (5) year term with no option for renewal. The contract identifies the terms and conditions for the service and includes the vendor proposal as an exhibit.
Financial Impact:	This project provides revenue to the Airport with a 35% revenue share for static displays and 10% revenue share for digital displays if new technology displays are installed.
Alternatives:	To deny.
Recommendation:	Recommend Approval. Approved by the Augusta Aviation Commission on January 26, 2023.
Funds are available in the following accounts:	N/A

REVIEWED AND APPROVED BY:

THIS AGREEMENT (Agreement) made this _____day of _____, 20___, by and between Augusta, Georgia (Augusta), a political subdivision of the State of Georgia, by and through the Augusta Aviation Commission (Commission) and Departure Media, Inc.,(Concessionaire), a corporation existing under the laws of North Carolina authorized to do business in the State of Georgia, whose principal address is 180 Meeting Street, Suite 350, Charleston, South Carolina, 29401.

WITNESSETH:

WHEREAS, the Augusta Regional Airport (Airport) is owned by Augusta, Georgia and operated by the Commission; and

WHEREAS, the Commission has the right to grant the privilege of concession agreements in accordance with applicable Augusta ordinances and subject to the terms and conditions hereinafter set forth; and

WHEREAS, Concessionaire is a corporation primarily engaged in the business of advertising; and

WHEREAS, both Commission and Concessionaire desire to enter into this Agreement to provide advertising space for persons desiring to place advertising in the Airport terminal; and

NOW THEREFORE, in consideration of the mutual covenants and considerations herein contained, Commission and Concessionaire hereby agree as follows:

SECTION 1
DEFINITIONS; CONSTRUCTION

Definitions. Certain capitalized words and terms used in this Agreement are defined in the text herein. The following words and terms are defined terms under this Agreement:

1.1 "Advertiser" shall mean any company, corporation or person purchasing advertising space at Airport.

1.2 "Airport" shall mean the lands and facilities owned by Augusta and operated by the Commission known collectively as Augusta Regional Airport, as it now exists and as it may change from time to time.

1.3 "Airport Concession Disadvantaged Business Enterprise" or "ACDBE" shall mean, a business, whether it is a corporation, sole proprietorship, partnership or joint venture certified as an ACDBE by the Airport, or State of Georgia, of which at least fifty-one percent (51%) of the interest is owned and controlled by one or more socially and economically

disadvantaged individuals as defined in the Airport and Airways Safety and Capacity Expansion Act of 1987 and the regulation promulgated pursuant to 49 CFR Part 23.

1.4 "Assigned Areas" shall mean those areas of the Airport provided to Concessionaire for advertising displays.

1.5 "Augusta" shall mean the governing authority of Augusta-Richmond County, Georgia.

1.6 "Best Management Practices" shall include those environmental or operational standards or guidelines specifying common and accepted practices appropriate for the types of businesses Concessionaire, its contractors, agents or vendors engage in on the Airport or such standards or guidelines as have been articulated by pertinent trade associations, professional associations or regulatory agencies, including (but not limited to) Best Management Practices developed by the Airport with its tenants, including Concessionaire. Best Management Practices shall be subject to approval by the Executive Director.

1.7 "Commission" shall mean the Augusta Aviation Commissioners tasked with the overall administration of the Airport.

1.8 "Common Use Area" shall mean and refer to those portions of the Airport shared equally by all tenants.

1.9 "Concessionaire" shall mean and refer to Departure Media, Inc.

1.10 "Executive Director" shall mean the Executive Director of Augusta Regional Airport, or his/her designee, to exercise functions with respect to the rights and obligations of the Commission under this Agreement.

1.11 "FAA" shall mean the Federal Aviation Administration of the U.S. Government or any federal agencies succeeding to its jurisdiction.

1.12 "Gross Advertising Sales Revenue" shall mean the amount received by Concessionaire from advertisers or their agencies for the use of advertising facilities under this Agreement and as further defined in Section 10.5.

1.13 "Public Areas" shall mean those areas of the Airport not leased to any person, company, or corporation that are open to use by the general public.

1.14 "Rules and Regulations" shall mean those rules, regulations, and ordinances promulgated by the Commission or operating directives issued by the Executive Director, as the same may be amended, modified, or supplemented from time to time

1.15 "TSA" shall mean the Office of Homeland Security and Transportation Security Administration, or their authorized successor(s).

1.16 "Uncollectibles" shall mean any invoice, which, after commercially reasonable efforts on the part of Concessionaire, remains uncollectible one year after delivery of invoice to Advertiser.

SECTION 2
REPRESENTATIONS AND UNDERTAKINGS

It is understood and agreed under this Agreement that the Commission is the operator of the Airport for the use and benefit of the public; that Augusta is the owner of the Airport and that Concessionaire may use only the Assigned Areas of the Airport herein described with only the privileges provided for in this Agreement.

2.1 **Representations by Augusta**. Augusta makes the following representations and warranties as the basis for the undertakings on its part herein contained:

2.1.1 **Creation and Authority**. Augusta is a public body corporate and politic, duly created and validly existing under the laws of the State of Georgia.

2.1.2 Augusta is the owner of the Airport, has all requisite power and authority under the laws of the State of Georgia to authorize the Commission to (i) grant a concession to the Concessionaire, and (ii) to enter into, perform its obligations under this Agreement and (iii) to exercise its rights under this Agreement.

2.2 **Representations by the Concessionaire**. The Concessionaire makes the following representations and warranties as the basis for the undertakings on its part herein contained:

2.2.1 **Organization and Power**. The Concessionaire is a corporation duly organized, validly existing, and in good standing under and by virtue of the laws of the State of North Carolina, is authorized to do business in the State of Georgia, and has all requisite power and authority to enter into this Agreement and perform its obligations and exercise its rights under the same.

SECTION 3
GENERAL

3.1 That for and in consideration of the payments and agreements hereinafter mentioned to be made by Concessionaire, Commission does hereby grant to Concessionaire the

right to serve as the national, regional and local sales representative for all advertising displays within Assigned Areas at the Airport and to solicit and make contracts for advertising and exhibit material to be displayed therein.

3.2 The approximate number, types and sizes of advertising and exhibit spaces, and their locations, as well as additional locations as may be authorized from time to time by the Executive Director as being available to Concessionaire, are at the sole discretion of the Executive Director.

3.3 Concessionaire shall provide a comprehensive, contemporary and innovative advertising program unique to the Airport that utilizes state-of-the art technology and optimizes advertising effectiveness while minimizing visual clutter.

3.4 Concessionaire shall provide advertising that creatively reflects the character of the Airport and the culture and quality of life in Augusta and the Central Savannah River Area (CSRA).

3.5 Concessionaire shall provide displays that are aesthetically consistent with the Airport's design and architecture and compatible with Airport operational efficiencies. Concessionaire may procure and install static displays in place of digital displays at the approval of the Executive Director.

3.6 Concessionaire shall provide timely and effective ongoing and emergency maintenance of all displays.

3.7 Concessionaire shall provide a program and hiring policy that provides opportunities for qualified disadvantaged businesses.

3.8 Concessionaire shall provide a business plan that effectively serves advertisers while providing optimum revenues for the Commission.

3.9 Concessionaire shall adhere to the following operational standards:

3.9.1 Shall focus on procuring advertising from local and regional advertisers.

3.9.2 Provide architect approved engineering drawings for digital displays.

3.9.3 Provide maintenance staff with on site availability within twenty-four (24) hours upon Executive Director or Advertiser request.

3.9.4 Provide graphic guidance to advertisers and obtain written approval from the Executive Director for all graphic designs prior to installation.

3.10 Except as otherwise provided herein, all work shall be at Concessionaire's sole cost and expense and Concessionaire shall provide all necessary labor, supervision, materials, supplies and transportation.

3.11 All improvements and displays installed by the Concessionaire shall be of high quality, safe, fire resistant materials and shall be aesthetically compatible with Airport design.

3.12 Concessionaire shall upload digital advertisements to monitors and maintain display inventory in a first-class manner during the entire term of the Agreement.

3.13 Concessionaire shall ensure all advertising material is installed in a timely manner and consistent with the advertising contract dates.

3.14 Concessionaire shall supervise the installation of all inventory and advertising displays.

3.15 Concessionaire shall supervise repairs of all inventory and advertising displays as required.

3.16 Concessionaire shall hire maintenance personnel to service the advertising displays and install and remove advertising artwork; provided, however, all communication regarding repairs and requests are to be made directly to Concessionaire operations manager not to the Airport's maintenance personnel. The Executive Director must be notified prior to installations and/or maintenance being done at Airport.

3.17 Concessionaire shall continuously promote the concept of Airport advertising and conscientiously solicit and endeavor to sell international, local, national and regional advertisers and advertising agencies on the use of advertising facilities located at the Airport while maintaining and expanding the customer base.

3.18 Concessionaire will act as an advertising consultant to the Executive Director, rendering advice and information regarding the management of advertising displays and sales of advertising. If the Commission is considering additional types of advertising, it shall consult with Concessionaire in order to give Concessionaire a reasonable opportunity to determine if direct competition with concession program is forthcoming.

3.19 Concessionaire shall correctly invoice Advertisers in a prompt, conscientious and professional manner. All checks will be made payable to Concessionaire.

3.20 Concessionaire shall follow up with Advertisers to assist with collection of any advertising fees owed.

3.21 Concessionaire shall provide Executive Director with copies of current advertising contracts, monthly statements showing Advertisers and applicable revenues for the previous month.

3.22 The Concessionaire may install and maintain appropriate informational signs in the Assigned Areas for advertising, provided however, that the design, installation and maintenance of such signs shall be consistent with the graphic standards and policies of the Commission. All such signage shall be subject to written approval of the Executive Director prior to installation.

3.23 All advertisement, advertising copy, advertising materials and manners of commercial presentation shall be subject to the reasonable approval of the Executive Director. The Executive Director shall provide written notice of approval or disapproval of proposal to Concessionaire within five (5) days of submission of graphics sample by Concessionaire. Concessionaire shall not display any advertisements reasonably disapproved by the Executive Director. Concessionaire shall immediately remove from the Airport, within twenty-four hours upon written demand, any offensive advertisements.

3.24 Concessionaire shall provide a dedicated and qualified Sales Team, Customer Service Manager, and Maintenance Manager as part of this Agreement.

3.25 Concessionaire shall conduct regular research studies to define the lifestyles and psychographics of the Airport's travelers.

3.26 Concessionaire shall work closely with the Executive Director and his staff and shall provide:

3.26.1 Monthly sales reports

3.26.2 Records of maintenance requests

3.26.3 Project Management

3.26.4 Equipment Management

3.26.5 Concept Approval

3.26.6 Recommendations on the best use of space

3.26.7 Reports related to construction, relocation and/or expansion projects.

3.27 Concessionaire shall develop relationships with the local Chambers of Commerce, Convention and Visitors' Bureaus and other community based organizations to increase awareness of advertising opportunities at the Airport.

3.28 Nothing herein contained shall be deemed to grant the Concessionaire any exclusive right or privilege within the meaning of Title 49 USC 40103 of the United States Code (the Act). Without derogation to the Act and subject to the terms and provisions hereof, the Concessionaire shall have the sole right to use the Assigned Areas for advertising purposes under the provisions of this Agreement.

SECTION 4
TERM

Effective Date; Term. This Agreement shall become effective on the date written above and shall be for a period of five (5) years. This Agreement shall comply with O.C.G.A. §36-60-13, as amended, regarding multi-year agreements.

SECTION 5
AIRPORT PREMISES

5.1 Advertising displays may be located throughout the public areas of the Airport as the Concessionaire deems effective and as approved by the Executive Director.

5.2 All locations and advertising display units are subject to approval by the Executive Director. Concessionaire may modify advertising display types, locations and quantities only with the Executive Director's written approval.

5.3 Concessionaire shall use the Assigned Areas designated for advertising displays.

5.4 Commission reserves the right to enter upon the Assigned Areas at any time for the purpose of further developing and improving said Assigned Areas as it sees fit, regardless of the desires of Concessionaire, and without interference or hindrance, and at Commission's sole cost and expense.

5.5 Concessionaire shall not attach any additional posters, pictures, advertisement, signs, or the like on the walls or the counters located in the Airport, without the prior written consent of the Executive Director.

SECTION 6
MAINTENANCE AND REPAIR

6.1 Concessionaire accepts the Assigned Areas in their present condition and agrees to maintain the displays in the Assigned Areas in good state of repair at all times during the life of this Agreement.

6.2 Concessionaire warrants it has inspected the Assigned Areas and accepts possession of the Assigned Areas and any improvements thereon "as is" in its present condition, and subject to all limitations imposed upon the use thereof by the rules and regulations of the FAA, TSA, ordinances of Augusta and the Airport's Rules and Regulations as amended from time to time, or any regulation of any other governmental entity having jurisdiction over the Airport. Concessionaire agrees that the Assigned Areas are suitable and sufficient for the uses permitted hereunder. Except as may otherwise be provided for herein, Commission shall not be required to maintain nor to make any improvements, repairs restorations upon or to the Assigned Areas or to any of the improvements presently located thereon. Commission shall never have any obligation to repair, maintain or restore, during the term of this Agreement, any improvements placed upon the Assigned Areas by Concessionaire, its successors and assigns.

6.3 Concessionaire, without limiting the generality hereof, shall:

6.3.1 Keep at all times, in a clean and orderly condition and appearance, the Assigned Areas, all improvements thereon and all of the Concessionaire's fixtures, equipment and personal property which are located on any part of the Premises;

6.3.2 Repair any damage caused by Concessionaire or its employees and/ or contractors.

SECTION 7
APPROVAL OF ADVERTISING MATERIALS; PLACEHOLDERS

7.1 All advertising material and exhibit material, advertisements, location and manner of presentation shall be subject to approval by the Executive Director.

7.2 Concessionaire will immediately remove from the Airport, at its sole cost and expense, upon written demand of the Executive Director, advertising material that may be considered offensive to the general public. In the event that such material is not removed immediately upon receipt of written demand, the Executive Director may remove said material or display and Concessionaire will pay any warehouse or storage rental or other costs incurred by this action.

7.3 Neither the Commission nor its authorized representatives shall be held responsible or liable for any damage to the equipment or materials so removed.

SECTION 8
USE OF AIRPORT

8.1 Concessionaire shall not use or occupy or permit the Assigned Areas or any part thereof to be used or occupied, nor do or permit anything to be done in or on the Assigned Areas, in whole or in part, in a manner which would in any way (i) violate any then-applicable legal requirements, or (ii) violate any of the covenants, agreements, provisions and conditions of this Agreement (iii) violate the certificate of occupancy then in force with respect thereto, or (iv) may make it difficult for the Commission to obtain fire or other insurance required hereunder, or (v) as will constitute a public or private nuisance.

8.2 Concessionaire shall not use or occupy or permit the Assigned Areas or any part thereof to be used or occupied, in whole or in part, in a manner which would in any way, in the Executive Director's reasonable judgment, may or tend to, impair or interfere with (i) the character, reputation or appearance of the Assigned Areas or the Airport.

8.3 Concessionaire shall not do or permit or suffer any waste, damages, disfigurement or injury to or upon the Assigned Areas or any part thereof.

8.4 In connection with the exercise of its privileges under this Agreement, Concessionaire shall not:

8.4.1 Do or permit its agents, employees, directors, or officers to do anything on or about the Airport that may interfere with the effectiveness or accessibility of the drainage and sewage system, electrical system, air conditioning system, fire protection system, sprinkler system, alarm system, and fire hydrants and hoses, if any, installed or located on or within the Airport.

8.4.2 Bring, keep or store, at any time, flammable or combustible liquids on the premises, except in storage containers especially constructed for such purposes in accordance with federal, state, and county laws, including the Uniform Fire Code and the Uniform Building Code. For the purposes of this Agreement, flammable or combustible liquids shall have the same definitions as set forth in the most recent Uniform Fire Code.

8.4.3 Do or permit its agents, employees, directors, or officers to do any act or thing upon the Airport that will invalidate or conflict with any fire or other casualty insurance policies covering the Airport or any part thereof.

8.4.4 Do or permit its agents, employees, directors, or officers to do any act or thing upon the Airport that will jeopardize the Airport's Operating Certificate.

8.4.5 Do or permit its agents, employees, directors, or officers to do any act or thing in conflict with the Airport's Security Plan.

8.4.6 Use the Premises for any illegal purposes, or in violation of the rules and regulations of the FAA, TSA, ordinances of Augusta and/or the Airport's Rules or Regulations, as amended from time to time, or any regulation of any other governmental entity having jurisdiction over the Airport.

8.4.7 Use of the Airport in any manner that will create any nuisance or trespass with respect to other tenants; constitute any unreasonable annoyances, obstruction or interference with operations; or in any manner interfere with, obstruct, block or violate in any manner, the navigable airspace above the Airport in compliance with 14 C.F.R. § 77.5 and/or other regulations as implemented by the Commission, the FAA or as may be implemented by the TSA.

8.4.8 Cause or permit any hazardous materials to be placed, stored, generated, used, or disposed of in, on, under, about, or transported from anywhere on the Airport by Concessionaire, its agents, employees, contractors, or other person unless it has complied with the following: with respect to hazardous materials other than cleaning products and/or substances reasonably necessary in connection with Concessionaire's advertising activities, the prior written consent of the Executive Director shall be required, which shall not be withheld unreasonably. Augusta may impose, however, as a condition of such consent, such requirements as the Executive Director in his/her sole discretion may deem reasonable or desirable, including, without limiting the generality of the foregoing, requirements as to the manner in which, the time at which, and the contractor by whom such work shall be done, and Concessionaire must comply with all environmental laws and regulations (including compliance with all Environmental Protection Agency requirements concerning clean-up) , and with prudent business practices, with respect to such hazardous materials, and the presence of hazardous materials must be reasonably necessary for the operation of Concessionaire's business. "Hazardous Material" shall mean: (1) any oil petroleum products, flammable substances, explosives, radioactive materials, hazardous

wastes or substances, toxic wastes or substances, or any other wastes, materials, or pollutants that pose a hazard to the Airport or surrounding property; or to the safety and/or health of persons on or about the Airport and surrounding property and/or cause Concessionaire to be in violation of any federal, state, or local laws governing or regulating hazardous materials; (2) asbestos in any form, urea formaldehyde foam insulation, transformers, or other equipment that contains dielectric fluid containing regulated levels of polychlorinated biphenyls, or radon gas; (3) any chemical, material, or substance defined as or included in the definition of "hazardous substances", "hazardous waste", "hazardous material", "extremely hazardous waste", "restricted hazardous waste", "toxic substance", or similar words under any applicable local, state, or federal laws, or any regulations promulgated pursuant thereto, including, but not limited to: the Comprehensive Environmental Response, Compensation and Liability Act of 1980 (CERCLA), as amended, 42 U.S.C. §§9601, et seq.; the Hazardous Materials Transportation Act, as amended, 49 U.S.C. §§1801, et seq.; the Federal Water Pollution Control Act (Clean Water Act, or CWA), as amended, 33 U.S.C §§1251 et seq.; the Resource Conservation and Recovery Act (RCRA), as amended, 42 U.S.C. §§6901, et seq.; the Toxic Substances Control Act (TSCA), as amended, 15 U.S.C. §§ 2601, et seq.; (4) any other chemical, material, or substance exposure that is prohibited, limited, or regulated by any government authority, and that may or could pose a hazard to the health and safety of occupants of the Airport, or to any person entering upon the Airport or adjacent property; and/or (5) any other chemical, material, or substance that may or could pose a hazard to the environment or a person.

8.5 Concessionaire shall use the Assigned Areas in accordance with published Airport Rules and Regulations. Concessionaire specifically agrees to comply with all present or future Rules and Regulations of Airport that are promulgated for the general safety and convenience of the Airport, its various tenants, invitees, licensees and the general public and which do not materially affect the use and enjoyment of the Assigned Areas for the purposes for which they are intended under this Agreement. Said Rules and Regulations may be examined by Concessionaire at the Airport Administrative Offices or viewed on the Airport's website.

8.6 Concessionaire shall have rights of ingress and egress to and from the Assigned Areas, included but not limited to common use roadways, subject to any Rules or Regulations which may have been established or shall be established in the future by the Commission. Such

rights of ingress and egress shall apply to the Concessionaire's employees, customers, agents, contractors, suppliers, and other authorized individuals.

8.7 Employees, agents and contractors of Concessionaire shall be permitted to park at the Airport under the same terms and conditions as employees of other concessionaires at the Airport. Visiting service personnel shall be permitted to park in areas designated for temporary vendor parking.

SECTION 9
FACILITIES AND SERVICES TO BE PROVIDED BY AUGUSTA

Commission shall, without cost to Concessionaire:

9.1 Furnish all wall spaces and/or other areas in the condition required to accept video monitors and exhibits in the approximate number, type, standard industry sizes and locations, as well as additional locations, as may from time to time be approved by the Executive Director.

9.2 Supply electrical outlets at each approved location and any additional approved locations if equipment type should require electricity and provide CAT 5 cable or wireless access to the Airport's internet portal for video monitors at the Concessionaires' expense.

9.3 Provide electrical current in reasonable amounts for the operation of video monitors.

9.4 Without incurring any liability for property damage, provide normal police surveillance and protection of the displays against vandalism or trespass and will report to Concessionaire the discovery of any damage or unsightly appearance so client(s) may be notified of any interruption in service and repair(s) can begin.

SECTION 10
CONCESSION FEES

10.1 For the privileges herein provided, Concessionaire shall pay the Commission thirty-five percent (35%) of the Gross Advertising Sales Revenue or the minimum annual guarantee (MAG), whichever is higher, from advertising opportunities sold by Concessionaire for placement at the Airport for each of the years the Agreement is in effect. In the event Concessionaire upgrades the monitors to NanoLumens equipment, the percentage share of digital revenue from this exposure will be ten percent (10%). The Percentage Fee due each month shall be calculated by multiplying the Applicable Percentage set forth as outlined below by

Concessionaire's Gross Advertising Sales Revenue for the immediately preceding calendar month or the MAG, whichever is higher.

10.2 The Percentage Fee Payment of the Gross Advertising Sales Revenue shall be subject to proportional percentage reduction equal to actual and prospective advertising revenues lost and unearnable from removed advertising locations where ten percent (10%) or more (as a percent of potential advertising revenues based on Concessionaire's current rate card) of the Assigned Areas are deleted at the request of Augusta without the option of replacement locations of at least equal passenger exposure and value. The specified percentage of the Gross Advertising Sales Revenue payment to the Commission shall be subject to temporary pro rata reduction equal to Advertiser payments refunded to or withheld by affected advertisers where a display case or other display advertisement in the Assigned Areas was visually obstructed or subject to electric supply failure for more than three days without default to Concessionaire.

10.3 Capital investment will be determined by (i) the number of approved locations, (ii) Advertisers' demand for new advertising options pursuant to executed contracts and (iii) the term of the Agreement.

10.4 The term "Gross Advertising Sales Revenue" as used herein shall be defined as the amount received by Concessionaire from advertisers or their agencies for the use of advertising facilities under this Agreement.

It is further understood that such Gross Advertising Sales receipts (Gross Receipts) shall not include:

10.4.1 Standard fifteen percent (15%) commissions paid to advertisers' recognized advertising agencies;

10.4.2 Uncollectibles at year-end;

10.4.3 Any taxes imposed by law which are separately stated to and paid by a customer and directly payable to Augusta;

10.4.4 Expensible charges and fees including but not limited to phone charges, rental fees, maintenance fees, brochure stocking fees, credit card fees, technology fees (i.e., content management including programming and maintenance charges for computer-operated, video, interactive or motion displays, equipment repair or replacement, IT support), production, installation and removal charges; or

10.4.5 Commissions received from vendors for production and fabrication work.

10.5 In the event Concessionaire is unable to collect amounts due from Advertisers upon which Concessionaire had previously based Percentage Fee payments after diligent efforts, such "uncollectible amounts" shall be deemed uncollectible and an appropriate adjustment shall be made in Concessionaire's subsequent statements and Percentage Fee submissions. If any "uncollectible amounts" are collected by Concessionaire after adjustment, then appropriate upward adjustment shall be made to a subsequent revenue statement and Percentage Fee submission, excluding collection costs.

10.6 All Percentage Fee Payments shall be made on or before the twentieth (20th) day of the calendar month following the calendar month during which the Gross Advertising Sales Revenue hereinabove described has been realized. Any and all local taxes, including use, receipts, or similar taxes imposed by law and levied and assessed to Concessionaire as a result of its activities hereunder shall be excluded from the Percentage Fee Payment.

SECTION 11
CONCESSION REQUIREMENTS

The granting of the authority to the Concessionaire to operate at the Airport set forth in this Agreement will be on the following terms and conditions:

11.1 Concessionaire shall provide the highest degree and standards of quality advertising services to the passengers and patrons of the Airport.

11.2 Concessionaire shall furnish prompt, efficient, first class service that is adequate to meet all responsible demands for advertising services.

11.3 Concessionaire shall abide by the rules and regulations of the FAA, TSA, ordinances of Augusta, and the Augusta Regional Airport's Rules and Regulations as amended from time to time, or any regulation of any other governmental entity having jurisdiction over the Augusta Regional Airport.

SECTION 12
EMPLOYEES OF CONCESSIONAIRE

12.1 Concessionaire shall require all of its employees, subcontractors and/or independent contractors hired by Concessionaire working in view of the public, and about the Airport, to wear clean and neat attire and to display appropriate identification.

12.2 One of the Concessionaire's employees shall be designated to obtain an identification badge from the Airport. Concessionaire will be responsible for paying for the cost of TSA required employee background checks and badging.

SECTION 13
INTEREST ON OVERDUE PAYMENTS

Payments not received when due shall accrue interest from the due date until paid in full. After the due date, there shall be added to all unpaid sums due the Commission an interest charge of one and one-half percent (1.5%) per month on the principal sum, computed as simple interest; at no time will the interest actually charged exceed the highest applicable interest rate permitted under Georgia law.

SECTION 14
ACCOUNTING PROCEDURES; AUDIT

14.1 **Accounting Procedures**. Concessionaire covenants and agrees that it shall establish and maintain an accounting system (specifically including all books of account and records customarily used in the type of operation permitted by this Agreement) in full and complete accordance with generally accepted accounting principles and otherwise reasonably satisfactory to the Commission for the determination of any revenue computations, which may be necessary or essential in carrying out the terms of this Agreement. Concessionaire shall maintain its records relating to the operation permitted by this Agreement for a period of at least three (3) years after the end of each Agreement year (or until the close of any ongoing audit thereof being conducted by, or on behalf of Augusta); provided, however, that Augusta may (prior to the expiration of the relevant retention period) request that any such records be retained for a longer period of time, in which case Concessionaire, at its option, may deliver such records into the custody of Augusta.

14.2 **Audit.** Representative(s) designated by the Executive Director shall be allowed to inspect and audit Concessionaire's books of accounts and records with reference to the determination of any matters relevant to this Agreement at all reasonable times. Commission's representative shall specifically be entitled to inspect and audit any records necessary, in the auditor's professional discretion, to complete the audit in a manner consistent with Generally Accepted Auditing Standards. The costs of such audit shall be borne by the Commission unless

the results of such audit reveal a discrepancy of more than three percent (3%) for any other amount for any twelve (12) month audit period. In the event of such discrepancy, the full cost of the audit shall be borne by the Concessionaire, and Concessionaire shall promptly pay all additional fees owing to the Commission together with interest on such sums from the date originally due until the date paid.

14.3 In the event that Concessionaire's books or accounts are not maintained in Augusta, they shall be made available for audit digitally within twenty (20) business days of a request by the Commission, or Concessionaire shall pay in full any travel and related expenses of the Commission's representative(s) to travel to the location outside Augusta.

14.4 In those situations where Concessionaire's records have been generated from computerized data (whether mainframe, minicomputer, or PC-based computer systems), Concessionaire agrees to provide the Commission's representative with extracts of data files in a computer readable format, electronic mail with attached files or suitable alternative computer data exchange formats. Concessionaire agrees to provide appropriate workspace to conduct the audit and free access to copiers; number to Concessionaire's accounting manager or the like who have a thorough knowledge of the accounting system as it pertains to this Agreement and who will assist Commission with its audit. Concessionaire will also allow interviews of past and present employees who were or are involved in the financial or operational activities of Concessionaire.

SECTION 15
RECORDS TO BE MAINTAINED BY CONCESSIONAIRE

15.1 Concessionaire shall maintain a complete and accurate set of books and records on the business conducted for this Agreement and same shall be open to inspection by the Commission or its representative at any reasonable time so as to ascertain the true amount of Concessionaire's Gross Advertising Sales Revenue from its operation on the Airport.

15.2 Concessionaire shall provide a statement verifying monthly Gross Advertising Sales Revenues, as previously reported by Concessionaire to Commission. Said verification is to be compiled by a competent accountant.

SECTION 16
COMPLIANCE WITH LAW

Concessionaire agrees that its operation at the Airport shall be conducted in conformity with all local, State, and federal laws and all published Airport Rules and Regulations. It is further agreed that the Executive Director, acting on behalf of the Commission, shall be, at all times, in full and complete charge of the Airport in its entirety and his directions as to policy and procedures shall be final and conclusive as regarding Concessionaire. Concessionaire understands that all operations, uses and occupancy of the Assigned Areas must be in strict compliance with all rules and regulations of the FAA, TSA, ordinances of Augusta, and the Augusta Regional Airport's Rules and Regulations as amended from time to time, or any regulation of any other governmental entity having jurisdiction over the Airport., grant requirements, and related provisions for Airport use and operations without restrictions or limitations. Concessionaire further agrees that, in the event there is a question of interpretation, it will comply with the Commission's interpretation of such requirements, rules, laws and regulations. This provision supersedes any other provision of this Agreement, which may be in conflict therewith. Any default by Concessionaire shall permit the Commission to immediately terminate the Agreement as a non-exclusive remedy.

SECTION 17
DEFAULT AND TERMINATION

17.1 The Commission may terminate this Agreement for any Event of Default or as set forth below:

17.2 Events of Default: The following shall be "Events of Default" under this Agreement constituting a material breach of the Agreement and the terms "Events of Default" and "default" shall mean any one of the following events:

17.2.1 If the Assigned Areas are vacated, not utilized or abandoned by the Concessionaire for a period of thirty (30) days or more.

17.2.2 If Concessionaire uses the Assigned Areas for unlawful or unauthorized purposes and/or fails to comply with or observe any statute, law, ordinance, rule, regulation, standard or requirement of Augusta, any federal, state or local governmental entity with respect to Concessionaire's occupancy and/or use of the Assigned Areas.

17.2.3 If Concessionaire fails to obtain, pay for, and maintain in full force and effect at all times during the life of this Agreement, without any lapse in coverage, such insurance as is required of Concessionaire herein.

17.2.4 If Concessionaire fails to make payments when due hereunder, where such failure shall continue for a period of seven (7) days following service of notice thereof upon Concessionaire by the Commission.

17.2.5 If Concessionaire uses, or permits the use of, the Premises at any time for any purpose which at that time is not authorized by this Agreement. Upon the occurrence of any material default and breach of this Agreement by Concessionaire, Commission may then immediately, or at any time thereafter, terminate this Agreement by service of a ten (10) days advance written notice to such effect upon Concessionaire and this Agreement shall terminate at 11:59:59 p.m. on the termination date specified within such notice.

17.2.6 The failure by Concessionaire to observe or perform any covenant, condition, or agreement to be observed or performed by Concessionaire in this Agreement.

17.2.7 The filing by Concessionaire of a petition in bankruptcy, Concessionaire being adjudged bankrupt or insolvent by any court, a receiver of the property of Concessionaire being appointed in any proceeding brought by or against Concessionaire, Concessionaire making an assignment for the benefit of creditors, or any proceeding being commenced to foreclose any mortgage or other lien on Concessionaire's interest in the Assigned Areas or on any personal property kept or maintained on the Airport by Concessionaire.

SECTION 18
REMEDIES

18.1 In addition to, and not in lieu or to the exclusion of, any other remedies provided in the Agreement or to any other remedies available to the Commission at law or in equity, whenever any "Events of Default" (other than a default under Section 17, above, upon which termination of this Agreement shall, at the Commission's option, be effective immediately without further notice) continues to be un-remedied in whole or in part for thirty (30) days after Notice of Default is provided by the Commission to Concessionaire (or for fifteen (15) days after Notice of Default in the case of default for failure to pay any fees or other required payment under when due). This Agreement and all of Concessionaire's rights under it will automatically

terminate if the Notice of Default so provides. Upon termination, Commission may reenter the Assigned Areas using such force as may be necessary and remove all persons and property from the Airport. Commission will be entitled to recover from Concessionaire all Concession fees and other sum or charge otherwise payable by Concessionaire, or any other payments and damages incurred because of Concessionaire's "Events of Default".

SECTION 19
NON-WAIVER OF RIGHTS

Should Concessionaire breach any of its obligations hereunder, Commission may thereafter accept from Concessionaire any payment or payments due hereunder, and continue this Agreement in effect, without in any way waiving the Commission's right to exercise its default rights hereunder, or any other remedies provided by law, for said breach. In addition, any waiver by the Commission of any default, breach, or omission of Concessionaire under this Agreement shall not be construed as a Waiver of any subsequent or different default, breach, or omission.

SECTION 20
ASSIGNMENT

20.1 Concessionaire may not, without the prior written consent of the Commission endorsed hereon, assign this Agreement. Such consent shall not be unreasonably withheld.

20.2 Assignees shall become liable directly to the Commission for all obligations of Concessionaire hereunto, without relieving Concessionaire's liability.

20.3 It is expressly understood that Concessionaire shall not sell or otherwise change ownership of its advertising business or permit representation by any person or persons other than Concessionaire without the prior written approval of the Commission.

SECTION 21
DAMAGE OR DESTRUCTION OF DEMISED PREMISES

If the Assigned Areas are totally destroyed (or so substantially damaged as to be un-tenantable) by storm, fire, earthquake, or other casualty, this Agreement shall terminate as of the

date of such destruction or substantial damage, and all concession fees shall be considered accounted for as between the parties hereunto as of that date.

SECTION 22
INSURANCE

22.1 Concessionaire agrees to carry and maintain in force at all times during the Term of this Agreement, at Concessionaire's sole expense, the insurance described herein.

22.2 Concessionaire acknowledges that the Commission has and reserves, the right to amend the insurance requirements imposed by this Agreement at any time, provided that any such amendment is not unreasonable.

22.3 Concessionaire understands and agrees that the minimum limits of the insurance required herein may become inadequate during the term of this Agreement and that, if it in any way, directly or indirectly, contingently or otherwise, affects or might affect the Airport or the Commission, as determined in the sole but reasonable discretion of the Executive Director, Concessionaire will increase such minimum limits by reasonable amounts on written request of the Executive Director. No such amendment shall reduce the coverage amounts lower than as stated in this Agreement.

22.4 Within (30) days of the publication by the Airport of any such modifications to the foregoing insurance requirements, Concessionaire shall deliver to the Commission insurance certificates certifying compliance with such modified coverage(s).

22.5 No written amendment of this Agreement shall be required to effectuate said increases in minimum limits.

22.6 All insurance required hereunder shall be by companies holding a "General Policyholders Rating" of A or better as set forth in the most current issue of "Best's Insurance Guide" and shall be issued a company licensed, qualified and authorized to transact business in the State of Georgia.

22.7 Any self-insured retention or deductible on any insurance coverage required shall be declared by Concessionaire and approved by the Commission.

22.8 Concessionaire acknowledges that the Commission is not responsible for the costs of its insurance premiums.

22.9 The insurance policies for coverage listed in this Section shall contain a provision that written notice of cancellation or any material change in policy by the insurer shall be delivered to the Commission no less than thirty (30) days prior to cancellation or change.

22.10 **Proof of Insurance**. Concessionaire shall provide the Commission with an annual Certificate of Insurance on all required insurance prior to Concessionaire's exercise of any privileges provided by this Agreement and annually upon the effective date thereafter within thirty (30) days of execution of this Agreement. Concessionaire shall furnish additional Certificates of Insurance, from time to time, upon specific request of the Commission.

22.11 The Augusta-Richmond County, Georgia Board of Commissioners, the Commission, Augusta Regional Airport, and their officers, agents, elected and appointed officials, representatives, volunteers, employees, guests, licensees, invitees, and successors in office shall be named as "Additional Insureds" on all required coverage and also shown on the certificate as such.

22.12 **General Liability Insurance.** General liability insurance with a combined single limit of not less than One Million Dollars ($ 1,000,000) covering Concessionaire's operations on Airport. The foregoing insurance shall be endorsed to state that it will be primary to the Commission's insurance and that the Concessionaire waives its right of subrogation against the Augusta- Richmond County, Georgia Board of Commissioners, the Commission, Augusta Regional Airport, and their officers, agents, elected and appointed officials, representatives, volunteers, employees, guests, licensees, invitees, and successors in office. the Augusta-Richmond County, Georgia Board of Commissioners, the Commission, Augusta Regional Airport, and their officers, agents, elected and appointed officials, representatives, volunteers, employees, guests, licensees, invitees, and successors in office shall be added as additional insureds on said policies. Said policy shall contain Severability of Interest Clause and Contractual Liability coverage at least as broad as that given in the most current CG 00 01 ISO form.

22.13 **Workers' Compensation Insurance**. Concessionaire shall provide Workers' Compensation insurance with statutory limits and employers liability with a limit of One Million Dollars ($1,000,000) for employees and subcontractors with limits of liability of not less than One Million Dollars ($1,000,000.00) for each accident/disease. Such policy (ies) shall be endorsed to state that the Workers' Compensation carrier waives its right of subrogation against

the Commission, Augusta-Richmond County, and their officers, agents, elected and appointed officials, representatives, volunteers, and employees.

22.14 **Property Insurance**. To insure Concessionaire against loss or damage to the existing structure and any improvements due to fire, lightning and all other perils included in standard extended coverage policies, plus vandalism and malicious mischief coverage, all in amounts of not less than ninety percent (90%) of replacement value. Upon request by the Commission, such replacement value shall be determined by a qualified appraiser, a copy of whose findings shall be submitted to the Executive Director, and thereafter, proper adjustment in the limits of insurance coverage shall be effected. Said property need not be maintained by Concessionaire, if Concessionaire is renting or leasing improvement and Concessionaire maintains the required insurance. The foregoing insurance shall be endorsed to state that the carrier waives its right of subrogation against the Augusta-Richmond County, Georgia Board of Commissioners, the Commission, Augusta Regional Airport, and their officers, agents, elected and appointed officials, representatives, volunteers, employees, guests, licensees, invitees, and successors in office. Augusta and the Commission shall be named as loss payees on any Property coverage. Said policy shall contain a Severability of Interest clause.

22.15 An insurance binder letter or a Certificate of Insurance must be sent to:

Executive Director
Augusta Regional Airport
1501 Aviation Way
Augusta, Georgia 30906-9620

22.18 **Loss Control and Safety**. Concessionaire shall retain control over its employees, agents, servants and subcontractors, as well as control over its invitees, and its activities on and about the Airport and the manner in which such activities shall be undertaken and to that end, Concessionaire shall not be deemed to be an agent of the Commission or Augusta. Precaution shall be exercised at all times by Concessionaire for the protection of all persons, including employees and property. Concessionaire shall make special effort to detect hazards and shall take prompt action where loss control/safety measure should reasonably be expected.

SECTION 23
FEDERAL GOVERNMENT'S EMERGENCY CLAUSE

It is understood that, during time of war or national emergency, the Commission shall have the right to lease any and all of the herein described Assigned Areas to the United States Government for military use, and if any such lease is executed, the provisions of this instrument insofar as they are inconsistent with the lease of the Government shall be suspended.

SECTION 24
INDEMNIFICATION AND HOLD HARMLESS

24.1 Concessionaire shall indemnify and hold harmless the Augusta-Richmond County, Georgia Board of Commissioners, the Commission, and their officers, agents, elected and appointed officials, representatives, volunteers, employees, guests, licensees, invitees, and successors in office against all claims, damages, losses and expenses, including but not limited to attorney's fees, and expenses of litigation incurred by the Commission in connection therewith related to or arising out of any damage or injury to property or persons, occurring or allegedly occurring in, on or about the Airport caused by any negligent act or omission of Concessionaire or which arise out of any failure of Concessionaire to perform its obligations hereunder during the period from the date of this Agreement to the end of the Agreement Term or Concessionaire's operations under this Agreement.

24.2 Concessionaire shall keep, defend and hold harmless the Augusta-Richmond County, Georgia Board of Commissioners, the Commission, and their officers, agents, elected and appointed officials, representatives, volunteers, employees, guests, licensees, invitees, and successors in office, from and against any and all claims, demands, suits, judgments, costs and expenses asserted by any person or persons, including agents or employees of Concessionaire, by reason of death or injury to persons or loss or damage to property, resulting from Concessionaire's operations or activities on the Airport, or anything done or omitted by Concessionaire under this Agreement except to the extent that such claims, demands, suits, judgment, costs and expenses may be directly attributed to the sole negligence of the Airport or its agents, employees, directors, or officers.

24.3 In the event of a conflict between the provisions of the Augusta Georgia Code and this Agreement the more stringent requirements shall govern.

SECTION 25
SECURITY

Concessionaire, its officers, employees, agents, and those under its control, shall comply with security measures required of Augusta, the Commission, the FAA, the TSA, or the U. S. Department of Transportation, or contained in any Airport Master Security Plan approved by the TSA, to include an Airport Tenant Security Program as outlined in 49 CFR Part 1542 regarding Concessionaire's Agreement. If Concessionaire, its officers, employees, agents, or those under its control shall fail or refuse to comply with said measures and such noncompliance results in a monetary penalty being assessed against the Commission, then Concessionaire shall be responsible and shall reimburse the Commission in the full amount of any such monetary penalty or other damages, including attorney's fees and other costs to defend Augusta and the Commission against such claims.

SECTION 26
DAMAGE TO AIRPORT

Concessionaire shall be liable for any damage to the Airport caused by Concessionaire's officers, agents, employees, contractors, subcontractors, or anyone acting under its direction and control, ordinary wear and tear excepted. All repairs for which Concessionaire is liable shall be made by the Commission at Concessionaire's expense.

SECTION 27
NON-DISCRIMINATION

27.1 Concessionaire shall furnish its services on a fair, equal and not unjustly discriminatory basis to all users thereof and it shall charge fair, reasonable, and non-discriminatory prices for each unit or service, provided that Concessionaire may be allowed to make reasonable and non-discriminatory discounts, rebates, or other similar type of price reductions to volume purchasers.

27.2 Concessionaire shall make its services available to the public on fair and reasonable terms without discrimination on the basis of race, creed, color, sex, sexual orientation, age, national origin, or disability.

27.3 Non-compliance with the above paragraphs, after written findings, shall constitute a material breach thereof and in the event of such non-compliance, the Commission shall have the right to terminate this Agreement or at the election of Augusta and/or the Commission or the

United States, either or both said governments shall have the right to judicially enforce the above paragraphs.

27.4 Concessionaire assures that it will undertake an affirmative action program to ensure that no person shall on the grounds of race, creed, color, national origin, sex, or disability be excluded from participating in any employment activities covered in 49 C.F.R. Part 29, Subpart E, and/or 29 C.F.R. Part 21. Concessionaire assures that no person shall be excluded on these grounds from participating in or receiving the services or benefits of any program or activity covered by this subpart. Concessionaire assures that it will require that its covered sub-organization provide assurances to Concessionaire that they similarly will undertake affirmative action programs and they will require assurances from their sub-organizations, as required by the aforesaid regulations, to the same effect.

27.5 Concessionaire will maintain open hiring and employment practices and will accept applications for employment in all positions from all qualified individuals.

27.6 Concessionaire will provide to the Commission any information needed in the preparation of reports or documents and other data relative to equal employment.

27.7 Concessionaire shall include similar clauses in any subcontracts and shall cause such subcontractors to include these clauses in any contract related to the provision of services.

SECTION 28
AIRPORT CONCESSION DISADVANTAGED BUSINESS ENTERPRISES

28.1 **Certification Required.** Augusta and the Commission do not operate a DBE, MBE or WBE Program for Augusta-Richmond County, Georgia funded projects, as a Federal Court has entered an Order enjoining the Race-Based portion of Augusta's DBE Program. Instead, Augusta operates a Local Small Business Opportunity Program. However, for various projects utilizing the expenditure of State or Federal funds, Augusta enforces DBE requirements and/or DBE goals set by the Federal and/or State Agencies in accordance with State and Federal laws. It is the policy of Augusta to support participation in the Airport Concession Disadvantaged Business Enterprises (ACDBE), as defined in 49 CFR Part 23, in concession activities at the Airport. This Agreement is subject to the provisions of 49 CFR Part 23 as applicable.

28.2 **Program.** The Commission has established an Airport Concession Disadvantaged Business Enterprise (ACDBE) program in accordance with regulations of the U.S. Department of

Transportation (DOT), 49 CFR Part 23. The Commission and Augusta Regional Airport is a primary airport and has received federal funds authorized for airport development after January 1988 (authorized under Title 49 of the United States Code); and has executed airport grant assurances that it will comply with 49 CFR Part 23. It is the policy of the Commission to ensure that ACDBEs as defined in Part 23, have an equal opportunity to receive and participate in concession opportunities. It is also our policy:

28.2.1 To ensure nondiscrimination in the award and administration of opportunities for concessions by airports receiving DOT financial assistance;

28.2.2 To create a level playing field on which ACDBEs can compete fairly for opportunities for concessions;

28.2.3 To ensure that our ACDBE program is narrowly tailored in accordance with applicable law;

28.2.4 To ensure that only firms that fully meet this part's eligibility standards are permitted to participate as ACDBEs at our airport(s);

28.2.5 To help remove barriers to the participation of ACDBEs in opportunities for concessions at the Airport; and

28.2.6 To provide appropriate flexibility to our Airport in establishing and providing opportunities for ACDBEs.

28.3 **Contact**. The Commission, on behalf of the Augusta Regional Airport, has appointed Risa Bingham, Augusta Regional Airport, 1501 Aviation Way, Augusta Georgia 30906 Telephone: (706) 798-3236; E-mail: rbingham@augustaga.gov as the Airport Concessionaires DBE Liaison Officer (ACDBELO). In that capacity, Ms. Bingham is responsible for implementing all aspects of the DBE program. Implementation of the ACDBE program is accorded the same priority as compliance with all other legal obligations incurred by the Commission and Airport in its financial assistance agreements with the Department of Transportation.

28.4 **Opportunities for Participation.** It is the policy of Commission and Airport to ensure that ACDBE, as defined in 49 CFR Part 23 and other small businesses have an equal opportunity to receive and participate in Department of Transportation (DOT) assisted contracts. Commission and Airport encourages the Concessionaire to make every reasonable effort to maximize contracting opportunities for ACDBE and other small businesses in any construction

or architectural changes to the premises and in the procurement of goods and services necessary for the operation of the Concession at this Airport.

28.5 **Reports**. Concessionaire shall submit ACDBE participation reports to the Commission as required for the purpose of demonstrating the Airport's compliance with 49 CFR Part 23. The ACDBE concession specific goal for this Agreement is 9.68%. The Airport is required to track the usage of ACDBE's for all concession contracts. The Concessionaire will be required to submit the following information:

28.5.1 Names and addresses of ACDBE firms and suppliers that will participate in the concession;

28.5.2 A description of the work that each ACDBE will perform;

28.5.3 The dollar amount of the participation of each ACDBE firm participating;

28.5.4 Written and signed documentation of the use of an ACDBE.

28.6 **Non-Discrimination in Contracts.** Commission and Airport encourage Concessionaire to create and maintain a diverse workforce, contractor and supplier base. The Concessionaire shall not create barriers to open and fair opportunities for minority business enterprises (MBE), women's business enterprises (WBE), small business enterprises (SBE) and disadvantaged business enterprises (DBE) to participate in all contracts at Augusta and to obtain or compete for contracts and subcontracts as sources of supplies, equipment, construction and services. In considering offers from and doing business with contractors and suppliers, the Concessionaire shall not discriminate on the basis of race, color, creed, religion, sex, age, disability, nationality, marital status, sexual orientation or disability. These requirements apply to all concessions firms and suppliers, including those who qualify as an Airport Concessions Disadvantaged Business Enterprise (ACDBE).

SECTION 29
NOTICES

All notices by either party to the other shall be made by depositing such notice in the registered or certified mail, of the United States of America, postage prepaid, and such notice

shall be deemed to have been delivered and received on the date of such depositing correctly addressed in the registered or certified mail.

All notices to the Commission shall be mailed to:

Augusta Aviation Commission
Attn: Executive Director
1501 Aviation Way
Augusta, GA 30906

With a copy to: Augusta Law Department
535 Telfair St.
Building 3000
Augusta, GA 30901

All notices to Concessionaire shall be mailed to:
Departure Media, Inc.
180 Meeting Street, Suite 350
Charleston, South Carolina 29401
Attn: Leslie Bensen

Either party may change the address and name of addressee to which subsequent notices are to be sent by notice to the other given as aforesaid.

SECTION 30
LIENS

Concessionaire shall cause to be removed promptly any and all liens of any nature arising out of or because of any construction performed by Concessionaire or any of its contractors or subcontractors upon the Airport or arising out of or because of the performance of any work or labor by or for it or them at said premises, reserving the right to contest in court the validity of any such liens. Concessionaire shall have the right to post an appropriate bond to cover its obligations pursuant to this Section. If any person or corporation attempts to assert a Mechanic's Lien against Augusta for improvements made by Concessionaire, Concessionaire shall hold Augusta harmless from such claim, including the cost of defense.

SECTION 31
SURVIVAL

Concessionaire's obligations under this Article shall survive the expiration or earlier termination of this Agreement. No modification, termination or surrender to the Commission of

this Agreement or surrender of the Assigned Areas or any part thereof, or of any interest therein by Concessionaire, shall be valid or effective unless agreed to and accepted in writing by the Commission, and no act by any representative or agent of the Commission, other than such written agreement and acceptance, shall constitute an acceptance thereof.

SECTION 32
RULES AND REGULATIONS

32.1 Concessionaire shall comply with and shall require its officers and employees and any other persons over whom it has direct control to comply with such Rules and Regulations governing the use of Airport facilities and the access to said facilities pursuant to this Agreement and Augusta's ordinances which may govern said use and access of the Airport, as may be amended from time to time by the Commission.

32.2 Concessionaire shall not use or permit to be used any Airport facilities for any purposes or uses other than those specifically authorized by this Agreement, and such other purposes or uses as may be mutually agreed upon in writing.

32.3 Concessionaire shall comply with and shall require its officers and employees and any other persons over whom it has control to comply with such reasonable and nondiscriminatory Rules and Regulations governing the use of Airport facilities pursuant to this Agreement as may from time to time be adopted and promulgated by Augusta or the Commission, including, but not limited to, security, health, safety, environmental concern, sanitation, and good order, and with such amendments, revisions, or extensions thereof as may from time to time be adopted and promulgated by the Commission. The Executive Director will direct Concessionaire to the Airport website location of the initial Rules and Regulations, which may be viewed currently at http://www.flyags.com/Resources/1316.pdf.

32.4 Concessionaire's right of access to the Airport shall be subject to security considerations and all federal, state, and local laws or regulations and all Airport rules, regulations, and ordinances now in effect or hereinafter adopted or promulgated.

32.5 Concessionaire shall, at all times, comply with any and all present and future laws, ordinances, and general rules or regulations of any public or governmental entity pertaining to its operations at the Airport now or at any time during the term that this Agreement is in force.

SECTION 33
ENTIRE AGREEMENT

This Agreement contains the entire agreement of the parties and no representation, inducements, promises, or agreement, oral or otherwise, between the parties not embodied herein shall be of any force or effect. No failure of the Commission to exercise any power at variance with the terms hereof shall constitute a waiver of The Commission's right to demand exact compliance with the terms hereof.

SECTION 34
GOVERNING LAW

This Agreement and all disputes arising hereunder shall be governed by the laws of the State of Georgia.

SECTION 35
VENUE

All claims, disputes, and other matters in question between the Commission and Concessionaire arising out of or relating to this Agreement, or the breach hereof, shall be decided in the Superior Court of Richmond County, Georgia. Concessionaire, by executing this Agreement, specifically consents to jurisdiction and venue in Augusta-Richmond County and waives any right to contest jurisdiction and venue in the Superior Court of Richmond County, Georgia or the United States District Court for the Southern District of Georgia, Augusta Division.

SECTION 36
ATTORNEY'S FEES

If the Commission is reasonably required to obtain counsel to enforce any of its rights under this Agreement or to collect its fees and charges, the Commission shall be entitled to recover from Concessionaire reasonable attorney's fees and expenses incurred by it in connection with such proceedings.

SECTION 37
MISCELLANEOUS PROVISIONS

37.1 No purported or alleged waiver of any of the provisions of this Agreement shall be valid or effective unless in writing signed by the party against whom it is sought to be enforced.

37.2 Captions herein are for convenience or reference only and in no way define, limit or expand the scope or intent of this Agreement. Whenever the context hereof shall so require, the singular shall include the plural, the male gender shall include the female, and vice versa.

37.3 **Counterparts**. This Agreement may be executed in two or more counterparts, all of which together shall constitute but one and the same Agreement. In the event that one or more of the provisions hereof shall be held to be illegal, invalid or enforceable, such provisions shall be deemed severable and the remaining provisions hereof shall continue in full force and effect.

37.4 Nothing contained in this Agreement shall be construed to be a waiver of Augusta-Richmond County, Georgia or the Commission's sovereign immunity.

37.5 It is specifically agreed between the parties executing this Agreement that it is not intended by any of the provisions of this Agreement to create in the public or any member thereof, third party beneficiary status in connection with the performance of the obligations herein.

37.6 Nothing contained in this Agreement shall be construed to be a waiver of any individual's qualified good faith immunity.

37.7. **Covenants Bind and Benefit Successors and Assigns**. The provisions of this Agreement shall be binding upon and inure to the benefit of the parties hereto and their respective successors and permitted assigns; provided, however, that no one shall have any benefit or acquire any rights under this Agreement pursuant to any conveyance, transfer, or assignment in violation of any of its provisions.

37.8 **Open Records**. The Concessionaire acknowledges that all records relating to this Agreement and the services to be provided under this Agreement may be a public record subject to Georgia's Open Records Act (O.C.G.A. § 50-18-70, et seq.). Concessionaire shall cooperate fully in responding to such request and making all records, not exempt, available for inspection and copying as provided by law. Concessionaire shall notify the Commission immediately of any request made under the Open Records Act and shall furnish Augusta and the Commission with a copy of the request and the response to such request.

IN WITNESS WHEREOF, the parties have executed this Agreement as of the day and year first above written.

Augusta- Richmond County, Georgia

By: _____
Garnett L.Johnson Mayor

Attest:

_____
Lena Bonner, City Clerk

Date: _____

Augusta Aviation Commission:

By: _____
_____, Chairman

Signed this _____day of _____, 2023 in the presence of:

DEPARTURE MEDIA, INC.

_____
Witness

_____
Leslie Bensen, President and Chief Executive Officer

Approved as to content:

Approved as to form:

By: _____
Rachel Mack, General Counsel

Date: _____

EXHIBIT A
OPERATIONAL PLAN

Concept and Operational Plans

Design Plan/Schedule

In order to develop an impressive display program that commands maximum revenues, our design plan is scheduled in phases. Concepts are created for your approval, then marketed to prospective customers until an advertiser is secured; the display is then fabricated and installed. This process creates a demand for unique displays and minimizes clutter.

Augusta Regional Airport - Advertising Program Schedule

Display Type	Display Type Description - Main Terminal	Timing
Sponsorship	Children's Play Area *with glass graphic and nonlit flexgraphic	30 days from advertising contract execution
Tension Fabric Displays - Nonlit	Standard Nonlit Flexgraphic - 6x6 in Main Terminal Arrivals Baggage Claim	30 days from advertising contract execution
Tension Fabric Displays - Nonlit	Arrivals Soffit (AM6)	execution
ension Fabric Displays - Nonlit	Gatehold Recharge Station 4'x7'	execution
Tension Fabric Displays - Nonlit	Baggage Claim Circle Graphics	AGS to determine - 30-60 days after approval
Main Terminal Digital	TSA, Gatehold and Arrivals Digital Monitor Upgrades	AGS to determine - 30-60 days after approval
Recharge Station	Baggage Waiting Area Recharge Station (without seating)	execution
Murals	Arrivals Hallway and Baggage Floor Decals	execution
Murals	Interior JetBridges	execution
Tension Fabric Displays - Nonlit	Freestanding Carousel Double-sided TFD	30 days from advertising contract
Display Type	**Display Type Description - Private Terminal (FBO)**	**Timing**
Digital	Private Terminal Digital Monitor Upgrade	30 days from advertising contract

While the majority of displays will be purchased when sold to an advertiser, it usually takes about 30 days to install from contract execution.

AUGUSTA REGIONAL AIRPORT - (AGS)

Augusta, Georgia

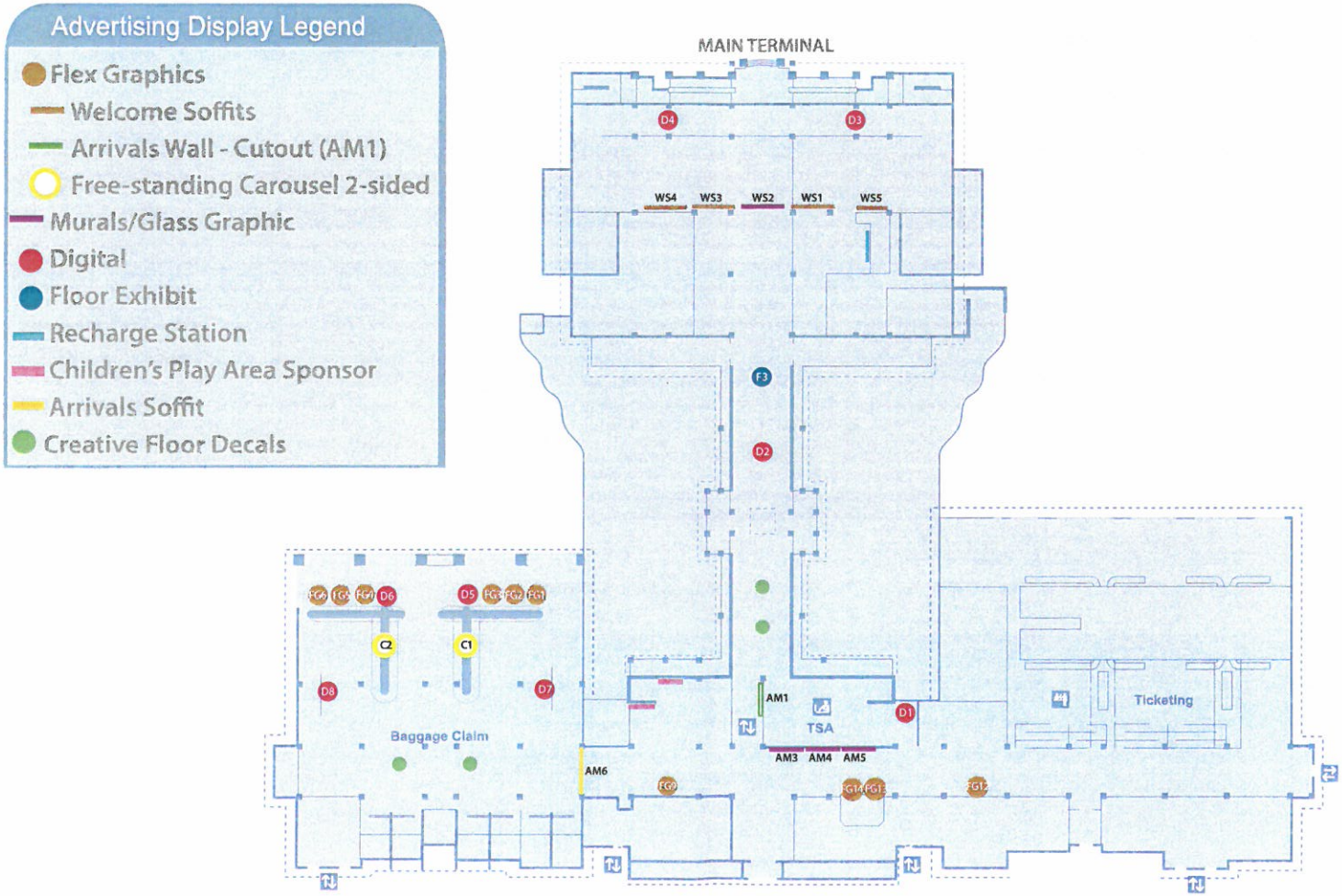

A. Children's Play Area Sponsorship

Tension fabric and Glass Graphic Combination Display

DEPARTURE MEDIA
airport advertising

CLIENT	
JOB #	
PROJECT	
DESIGNER	
CONCEPT	
VERSION	
DATE	

NOTES

Display dimensions are based on location and will be purchased based on advertiser demand.

K&R SOLUTIONS GROUP

FASTSIGNS®

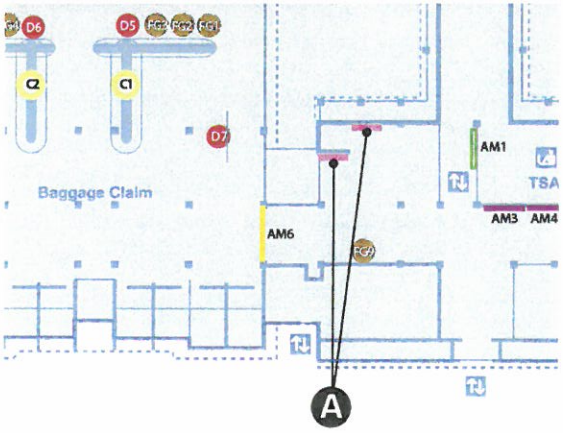

* SIZES ARE FOR REFERENCE ONLY. ALL SIZES SUPSPECT TO CHANGE BASED ON FINAL AIRPORT APPROVAL.

SHEET #

B. Recharge Station Sponsorship

Tension fabric frame above gatehold recharge station
Proposed Advertiser: Georgia Power

DEPARTURE MEDIA
airport advertising

CLIENT	
JOB #	
PROJECT	
DESIGNER	
CONCEPT	
VERSION	
DATE	

NOTES

* SIZES ARE FOR REFERENCE ONLY. ALL SIZES SUPSPECT TO CHANGE BASED ON FINAL AIRPORT APPROVAL.

K&R SOLUTIONS GROUP

FASTSIGNS®

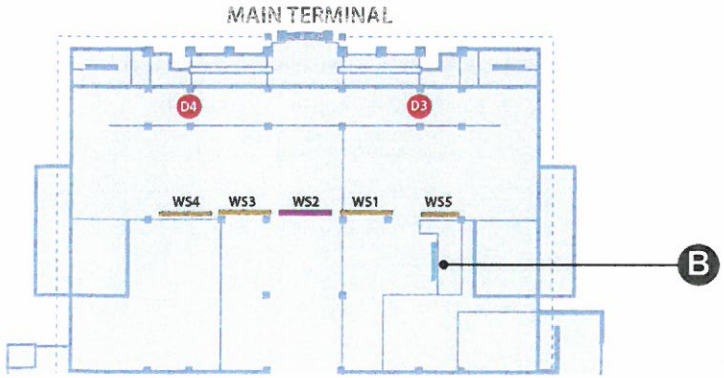

SHEET #

C. Baggage Specialty Graphics - Circle Shape

Tension fabric
Approx. 6' Diameter
-Accommodates existing and new advertisers

DEPARTURE MEDIA
airport advertising

CLIENT	
JOB #	
PROJECT	
DESIGNER	
CONCEPT	
VERSION	
DATE	

NOTES
Display dimensions are based on location and will be purchased based on advertiser demand.

K&R SOLUTIONS GROUP

FASTSIGNS®

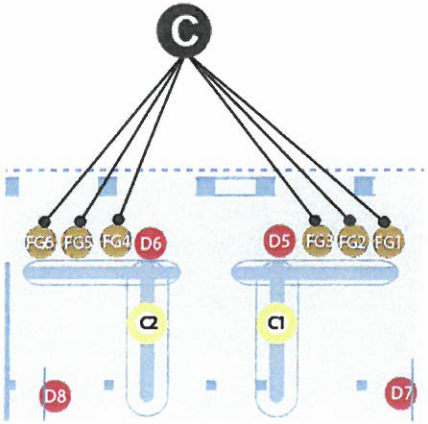

* SIZES ARE FOR REFERENCE ONLY. ALL SIZES SUPSPECT TO CHANGE BASED ON FINAL AIRPORT APPROVAL.

SHEET #

C. Baggage Specialty Graphics - Circle Shape

Tension fabric
Approx. 6' Diameter
-Accommodates existing and new advertisers

DEPARTURE MEDIA
Airport advertising

CLIENT	
JOB #	
PROJECT	
DESIGNER	
CONCEPT	
VERSION	
DATE	

NOTES
Display dimensions are based on location and will be purchased based on advertiser demand.

K&R SOLUTIONS GROUP

FASTSIGNS®

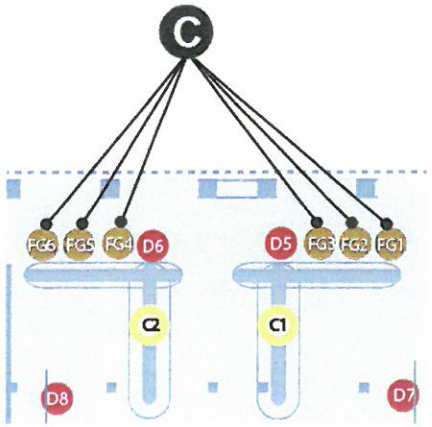

* SIZES ARE FOR REFERENCE ONLY. ALL SIZES SUPSPECT TO CHANGE BASED ON FINAL AIRPORT APPROVAL.

SHEET #

D. Baggage Digital Upgrades

Baggage back wall upgraded to two 85" digital monitors

New Monitor Specs: Samsung QM85R-b Commercial 4k Display
Upgrade Date: September 15, 2022

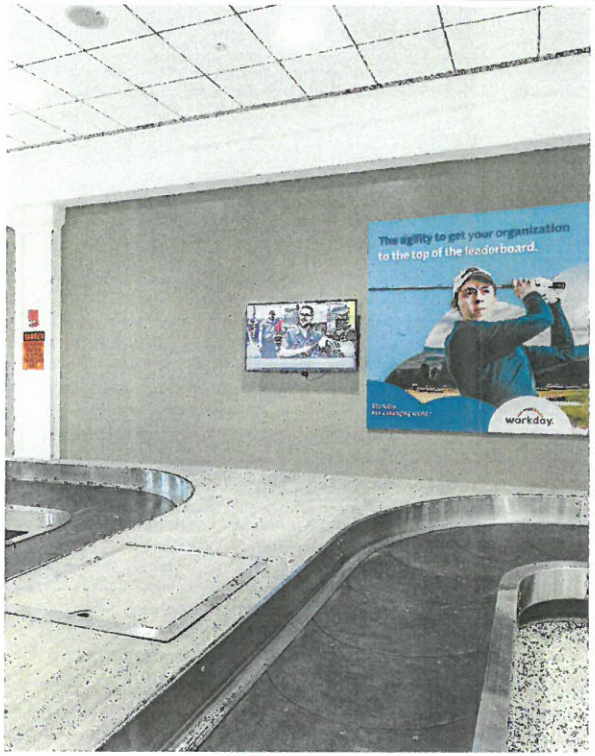

Before 2022 Upgrades

After 2022 Upgrades

CreativeRealities

BrightSign®

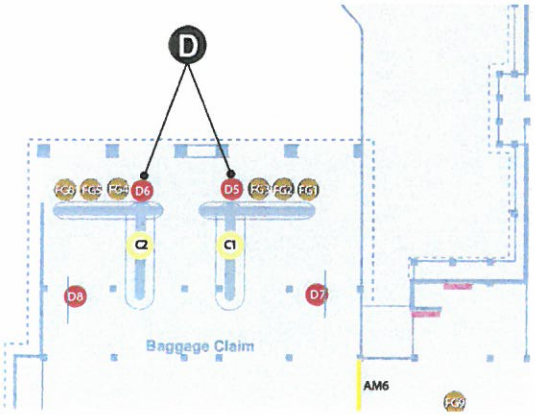

DEPARTURE MEDIA
airport advertising

CLIENT	
JOB #	
PROJECT	
DESIGNER	
CONCEPT	
VERSION	
DATE	

NOTES

* SIZES ARE FOR REFERENCE ONLY. ALL SIZES SUPSPECT TO CHANGE BASED ON FINAL AIRPORT APPROVAL.

SHEET #

Augusta Regional Airport
Estimated CAPX 2022-2027

Legend	Display Type	Qty*	Per Unit Total Cost	Totals
Display Type	**Interior Main Terminal Arrivals and Ticketing**			
Murals	Main Terminal Glass Graphics (AM3-AM5)	3	$1,800	$5,400
Digital	55" LCD Digital Monitor Upgrade - TSA Line	1	$2,500	$2,500
Murals	Arrivals Soffit (AM6))	1	$3,000	$3,000
Sponsorship	Children's Play Area *with glass graphic and nonlit flexgraphic	1	$2,500	$2,500
TFD Nonlit	Standard Nonlit Flexgraphic - 6'x6'	2	$800	$1,600
	Main Terminal Baggage Claim Options			
TFD Nonlit	Standard Nonlit Flexgraphic - 6'x6'	3	$800	$2,400
Recharge Station	Baggage Waiting Area Recharge Station (without seating)	1	$2,500	$2,500
TFD Nonlit	Circle Flexgraphics	6	$1,200	$7,200
Murals	Creative Floor Decals	4	$300	$1,200
Digital	85" LCD Digital Monitors Installed 2022	2	$5,382	$10,764
	*includes install			
TFD Nonlit	Freestanding Carousel Double-sided TFD 30"H x 84"W	2	$1,200	$2,400
	Main Teminal Concourse and Gatehold Areas			
Murals	Arrivals Hallway Creative Floor Decals	4	$300	$1,200
TFD Nonlit	Recharge Station TFD 4'x7'	1	$700	$700
Murals	Interior JetBridges	16	$200	$3,200
	*this is price per panel - 8 panels per jetbridge			
Digital	55" LCD Digital Monitor Upgrade - Gatehold and Hallway	3	$2,500	$7,500
	Private Terminal (FBO) Interior			
Digital	46" LCD Monitors	2	$1,200	$2,400
		52	$26,882	$56,464

Displays will be capitalized and installed in phases based on demand for advertising devices.
All costs are estimates and subject to increase or decrease. We anticipate several phases to accommodate existing and new advertisers.
Some units include production which is paid by advertiser. Installation costs are not included and are additional.
AGS receives 10% of digital gross advertising revenues and 35% of static gross advertising revenues.

DEPARTURE MEDIA
airport advertising

REVENUE SHARING PROPOSAL

Augusta Regional Airport
Projected Advertising Revenues and Proposed Percentage Share
2017-2022

Gross Annual Advertising Revenue Projections - AGS
2022-2027

	Year 1	Year 2	Year 3	Year 4	Year 5	Totals
Annual Gross Revenue Projections	$ 78,500	$ 82,425	$ 86,546	$ 90,874	$ 95,417	$ 433,762
Masters Annual Gross Revenue Projections	$ 155,000	$ 162,750	$ 170,888	$ 179,432	$ 188,403	$ 197,824
Total Gross Annual Revenue Projections	**$ 233,500**	**$ 245,175**	**$ 257,434**	**$ 270,305**	**$ 283,821**	**$ 1,290,235**
Total Gross Revenue to AGS (35%)	**$ 81,725**	**$ 85,811**	**$ 90,102**	**$ 94,607**	**$ 99,337**	**$ 451,582**

These are projected gross revenues largely contingent upon Departure Media's aggressive sales efforts and the health of local, national and regional economies. Our goal continues to be focused on building long term local relationships and revenues as the basis for annual recurring revenue. A concentration on National and Regional accounts will be inserted during annual events. A combination of static and digital display devices will maximize opportunities and minimize clutter. For your considertation, the Estimated Capital Plan outlines - financially and conceptually - several options to upgrade the digital program. Similar to the last term, we are requesting the same plan for the program when Departure Media purchases new digital assets the percentage share of revenue from digital ads will be 10%.

DEPARTURE MEDIA
airport advertising

Request for Proposals

Request for Proposals will be received at this office until **Thursday, December 8, 2022 @ 11:00 a.m. via ZOOM Meeting ID: 851 5764 5709; Passcode: 370781 for furnishing:**

RFP Item #22-253 Concession for Advertising for Augusta, GA – Augusta Regional Airport

RFPs will be received by: The Augusta Commission hereinafter referred to as the OWNER at the offices of:

Geri A. Sams, Director
Augusta Procurement Department
535 Telfair Street - Room 605
Augusta, Georgia 30901

RFP documents may be viewed on the Augusta Georgia web site under the Procurement Department ARCbid. RFP documents may be obtained at the office of the Augusta, GA Procurement Department, 535 Telfair Street – Room 605, Augusta, GA 30901 (706-821-2422).

Pre-Proposal Conference will be held on Monday, November 21, 2022 @ 10:00 a.m. Via Zoom – Meeting ID: 857 2869 3735; Passcode: 710389. Please contact Diane Johnston at (706) 513-9786 24-hours in advance for a site visit.

All questions must be submitted in writing by fax to 706 821-2811 or by email to procbidandcontract@augustaga.gov to the office of the Procurement Department by Wednesday, November 23, 2022 @ 5:00 P.M. No RFP will be accepted by fax or email, all must be received by mail or hand delivered.

No RFP may be withdrawn for a period of **90** days after bids have been opened, pending the execution of contract with the successful bidder(s).

***Request for proposals (RFP) and specifications*.** An RFP shall be issued by the Procurement Office and shall include specifications prepared in accordance with Article 4 (Product Specifications), and all contractual terms and conditions, applicable to the procurement. **All specific requirements contained in the request for proposal including, but not limited to, the number of copies needed, the timing of the submission, the required financial data, and any other requirements designated by the Procurement Department are considered material conditions of the bid which are not waivable or modifiable by the Procurement Director.** All requests to waive or modify any such material condition shall be submitted through the Procurement Director to the appropriate committee of the Augusta, Georgia Commission for approval by the Augusta, Georgia Commission. Please mark RFP number on the outside of the envelope.

GEORGIA E-Verify and Public Contracts: The Georgia E-Verify law requires contractors and all sub-contractors on Georgia public contract (contracts with a government agency) for the physical performance of services over $2,499 in value to enroll in E-Verify, **regardless of the number of employees**. They may be exempt from this requirement if they have no employees and do not plan to hire employees for the purpose of completing any part of the public contract. Certain professions are also exempt. All requests for proposals issued by a city must include the contractor affidavit as part of the requirement for their bid to be considered.

Proponents are cautioned that acquisition of RFP documents through any source other than the office of the Procurement Department is not advisable. Acquisition of RFP documents from unauthorized sources places the proponent at the risk of receiving incomplete or inaccurate information upon which to base their qualifications.

Correspondence must be submitted via mail, fax or email as follows:

Augusta Procurement Department
Attn: Geri A. Sams, Director of Procurement
535 Telfair Street, Room 605
Augusta, GA 30901
Fax: 706-821-2811 or Email: procbidandcontract@augustaga.gov

GERI A. SAMS, Procurement Director

Publish:

Augusta Chronicle	October 27, 2022 and November 3, 10, 17, 2022
Metro Courier	October 27, 2022

Revised: 3/22/21

RFP Item #22-253
Advertising Concessions for Augusta, GA – Augusta Regional Airport
Evaluation Date: Thursday, December 29, 2022 @ 2:00 p.m. via ZOOM

Vendors			Departure Media, Inc. 180 Meeting Street, Suite 350 Charleston, South Carolina 29401	Departure Media, Inc. 180 Meeting Street, Suite 350 Charleston, South Carolina 29401
Phase 1			**Ranking of 0-5 (Enter a**	
Evaluation Criteria	**Ranking**	**Points**	**Scale 0 (Low) to 5 (High)**	**Weighted Scores**
1. Completeness of Response • Package submitted by the deadline • Package is complete (includes requested information as required per this solicitation) • Attachment B is complete, signed and notarized	N/A	**Pass/Fail**	**PASS**	**PASS**
2. Qualifications & Experience	**(0-5)**	**20**	**5.0**	**100.0**
3. Organization & Approach	**(0-5)**	**20**	**5.0**	**100.0**
4.Scope of Services 4.Scope of Services a. Detailed Scope of services to be provided and concession location of interest identified -Proposed scope of services is appropriate for identified location and customer base. -Scope addresses all known project/service needs and appears achievable in the timeframes set forth in the project/service schedule. b. Project Deliverables - Proposed schedule/ hours of operation. - Proposed method for providing required transactional reports and service fees appear adequate. c. Marketing/business plan - Proposer has provided assessment/methodology used to determine potential success of the project. - Proposer has provided methodology for marketing the project/service to ensure ongoing success.	**(0-5)**	**25**	**4.5**	**112.5**
5. Financial Stability	**(0-5)**	**5**	**5.0**	**25.0**
6. References	**(0-5)**	**5**	**5.0**	**25.0**
Phase 1 Total - (Total Maximum Ranking 25 - Maximum Weighted Total Possible 375)			**24.5**	**362.5**
Phase 2 (Option - Numbers 7-8) (Vendors May Not Receive Less Than a 3 Ranking in Any Category to be Considered for Award)				
7. Presentation by Team	**(0-5)**	**10**		**0.0**
8. Q&A Response to Panel Questions	**(0-5)**	**5**		**0.0**
9. Cost/Fee Proposal Consideration (only choose 1 line according to dollar value of the proposal in relation to all fee proposals - enter the point value for the one line only)				**Cost/Fee Proposal Consideration**
Highest Revenue	5	**10**	**5.0**	**50.0**
Second	5	**6**		**0.0**
Third	5	**4**		**0.0**
Forth	5	**2**		**0.0**
Fifth	5	**1**		**0.0**
Total Phase 2 - (Total Maximum Ranking 15 - Maximum Weighted Total Possible 125)			**5.0**	**50.0**
Total (Total Possible Score 500) Total (May not Receive Less Than a 3 Ranking in Any				
Total Cumulative Score (Maximum point is 500)			**29.5**	**412.5**

Internal Use Only

Evaluator: Cummulative Date: 12/29/22

Procurement DepartmentRepresentative:_Nancy Williams_____

Procurement Department Completion Date: 12/29/22

FYI: Process Regarding Request for Proposals

Sec. 1-10-51. Request for proposals.

Request for proposals shall be handled in the same manner as the bid process as described above for solicitation and awarding of contracts for goods or services with the following exceptions:

(a) Only the names of the vendors making offers shall be disclosed at the proposal opening.

(b) Content of the proposals submitted by competing persons shall not be disclosed during the process of the negotiations.

(c) Proposals shall be open for public inspection only after the award is made.

(d) Proprietary or confidential information, marked as such in each proposal, shall not be disclosed without the written consent of the offeror.

(e) Discussions may be conducted with responsible persons submitting a proposal determined to have a reasonable chance of being selected for the award. These discussions may be held for the purpose of clarification to assure a full understanding of the solicitation requirement and responsiveness thereto.

(f) Revisions may be permitted after submissions and prior to award for the purpose of obtaining the best and final offers.

(g) In conducting discussions with the persons submitting the proposals, there shall be no disclosure of any information derived from the other persons submitting proposals.

Sec. 1-10-52. Sealed proposals.

(a) *Conditions for use*. In accordance with O.C.G.A. § 36-91-21(c)(1)(C), the competitive sealed proposals method may be utilized when it is determined in writing to be the most advantageous to Augusta, Georgia, taking into consideration the evaluation factors set forth in the request for proposals. The evaluation factors in the request for proposals shall be the basis on which the award decision is made when the sealed proposal method is used. Augusta, Georgia is not restricted from using alternative procurement methods for

obtaining the best value on any procurement, such as Construction Management at Risk, Design/Build, etc.

(b) *Request for proposals*. Competitive sealed proposals shall be solicited through a request for proposals (RFP).

(c) *Public notice*. Adequate public notice of the request for proposals shall be given in the same manner as provided in section 1-10- 50(c)(Public Notice and Bidder's List); provided the normal period of time between notice and receipt of proposals minimally shall be fifteen (15) calendar days.

(d) *Pre-proposal conference*. A pre-proposal conference may be scheduled at least five (5) days prior to the date set for receipt of proposals, and notice shall be handled in a manner similar to section 1-10-50(c)-Public Notice and Bidder's List. No information provided at such pre-proposal conference shall be binding upon Augusta, Georgia unless provided in writing to all offerors.

(e) *Receipt of proposals*. Proposals will be received at the time and place designated in the request for proposals, complete with bidder qualification and technical information. No late proposals shall be accepted. Price information shall be separated from the proposal in a sealed envelope and opened only after the proposals have been reviewed and ranked.

The names of the offerors will be identified at the proposal acceptance; however, no proposal will be handled so as to permit disclosure of the detailed contents of the response until after award of contract. A record of all responses shall be prepared and maintained for the files and audit purposes.

(f) *Public inspection*. The responses will be open for public inspection only after contract award. Proprietary or confidential information marked as such in each proposal will not be disclosed without written consent of the offeror.

(g) *Evaluation and selection*. The request for proposals shall state the relative importance of price and other evaluation factors that will be used in the context of proposal evaluation and contract award. (Pricing proposals will not be opened until the proposals have been reviewed and ranked). Such evaluation factors may include, but not be limited to:

(1) The ability, capacity, and skill of the offeror to perform the contract or

provide the services required;

(2) The capability of the offeror to perform the contract or provide the service promptly or within the time specified, without delay or interference;

(3) The character, integrity, reputation, judgment, experience, and efficiency of the offeror;

(4) The quality of performance on previous contracts;

(5) The previous and existing compliance by the offeror with laws and ordinances relating to the contract or services;

(6) The sufficiency of the financial resources of the offeror relating to his ability to perform the contract;

(7) The quality, availability, and adaptability of the supplies or services to the particular use required; and

(8) Price.

(h) *Selection committee*. A selection committee, minimally consisting of representatives of the procurement office, the using agency, and the Administrator's office or his designee shall convene for the purpose of evaluating the proposals.

(i) *Preliminary negotiations*. Discussions with the offerors and technical revisions to the proposals may occur. Discussions may be conducted with the responsible offerors who submit proposals for the purpose of clarification and to assure full understanding of, and conformance to, the solicitation requirements. Offerors shall be accorded fair and equal treatment with respect to any opportunity for discussions and revision of proposals and such revisions may be permitted after submission and prior to award for the purpose of obtaining best and final offers. In conducting discussions, there shall be no disclosure of information derived from proposals submitted by competing offerors.

(j) From the date proposals are received by the Procurement Director through the date of contract award, no offeror shall make any substitutions, deletions,

additions or other changes in the configuration or structure of the offeror's teams or members of the offeror's team.

(k) *Final negotiations and letting the contract.* The Committee shall rank the technical proposals, open and consider the pricing proposals submitted by each offeror. Award shall be made or recommended for award through the Augusta, Georgia Administrator, to the most responsible and responsive offeror whose proposal is determined to be the most advantageous to Augusta, Georgia, taking into consideration price and the evaluation factors set forth in the request for proposals. No other factors or criteria shall be used in the evaluation. The contract file shall contain a written report of the basis on which the award is made/recommended. The contract shall be awarded or let in accordance with the procedures set forth in this Section and the other applicable sections of this chapter.

DEPARTURE MEDIA
ATTN: LESLIE BENSEN
180 MEETING STREET SUITE 310
CHARLESTON, SC 29401

CLEAR CHANNEL AIRPORTS
ATTN: THADDEUS GLENN
7450 TILGHMAN STREET SUITE 104
ALLENTOWN, PA 18106

COREY AIRPORT SERVICES
225 COREY CENTER SE, STE 1
ATLANTA, GA 30312

INSPIRIA MEDIA GROUP
10 MITCHELL PLACE SUITE 201
WHITE PLAINS, NY 10601

ENCOMPASS MEDIA GROUP
11-11 44TH DRIVE
LONG ISLAND CITY, NY 11101

BLUE LINE MEDIA LLC
11301 W OLYMPIC BLVD., SUITE 464
LOS ANGELES, CA 90064-1653

TEAM 1 ADVERTISING & MAEKETING
206 JACKSON AVE.
NORTH AUGUSTA, SC

OUTFRONT MEDIA
405 LEXINGTON AVENUE
14TH FLOOR
NEW YORK, NY 10174

PWXPRESS
1900 COFFEEPORT ROAD
JACKSONVILLE, FL 32208
RETURNED MAIL

HERBERT JUDON
AUGUSTA REGIONAL AIRPORT

DIANE JOHNSTON
AUGUSTA REGIONAL AIRPORT

PHYLLIS MILLS JOHNSON
COMPLIANCE DEPARTMENT

RFQ 22-282 DESIGN SERVICES FOR
THE REHAB AND EXP OF LONG TERM
PARKING LOT A – PHASE 1
FOR AUGUSTA REGIONAL AIRPORT
RFQ DUE: WED., OCT 12, 2022 @ 11 A.M.

RFQ 22-282 DESIGN SERVICES FOR
THE REHAB AND EXP OF LONG TERM
PARKING LOT A – PHASE 1
FOR AUGUSTA REGIONAL AIRPORT
Mailed 9/1/22

1 of 1

Item 6.

WILDERNESS GRAPHICS INC 2022-10-27	cwb@wildernessgraphics.com WILDERNESS, WILDERNESS	N	NOM
WPP LLC 2022-10-27	kathryn.cooper@wpp.com Cooper, Kathryn	N	NOM
WYATT SIGN COMPANY 2022-10-27	sales@wyattsigncoinc.com Company, Wyatt Sign	N	NOM
Wall To Wall Signs LLC 2022-10-27	justin@wall2wallsigns.com Wall, Justin	N	NOM
Water Words That Work, LLC 2022-10-27	eric.eckl@waterwordsthatwork.com Eckl, Eric	N	NOM
WeUsThem Inc. 2022-10-27	vida@weusthem.com Phuangrod, Vida	N	NOM
World Design Marketing 2022-10-27	susan@wdm1.com DeLano, Susan	N	NOM
Wright Touch Designs LLC 2022-10-27	tdwright@wrighttouchdesigns.com Wright, Tonya	Y	AFA
Zivian Consulting Group 2022-10-27	zivian_natural@yahoo.com Johnson, Zivian	N	NOM
ba.agency 2022-10-27	ashley@ba.agency Silverman, Ashley	N	NOM
eCuras LLC 2022-10-27	ben@ecuras.com Rakov, Ben	N	NOM
eSiteful 2022-10-27	les.lee@esiteful.com Lee, Les	N	NOM
eVolve Brand Marketing 2022-10-27	carolynmlighty@evolvebrandmarketing.com Lighty, Carolyn	Y	AFA
iKahan Media Inc 2022-10-27	ak@iKahanmedia.com Kahan, Alejandro	N	NOM
simpledu 2022-10-27	zach@simpledu.org Sheppard, Zach	N	NOM
three Atlanta, LLC 2022-10-27	jhouk@3atlanta.com Houk, Jackson	N	NOM
transcosmos America, Inc. 2022-10-27	kodas@transcosmos.com Skurzewski, Koda	N	NOM

ETHNIC GROUP	COUNT
African American	28
Asian American	8
Native American	1
Hispanic/Latino	7
Pacific Island/American	0
Non Minority	433
Not Classified	0
Total Number of Vendors	477
Total Number of Contacts	698

Planholders

Add Supplier | Export To Excel

Supplier (6)

Supplier	Download Date
Aurora Cleaning services llc	11/30/2022
Gateway Outdoor Advertising	11/09/2022
Moon Meeks & Associates, Inc.	10/28/2022
Rubyflo Media Group LLC	12/01/2022
Tummy Yummy Vending	12/09/2022
Vector Media Holding Corp	11/02/2022

Add Supplier

Supplier Details

Supplier Name	Aurora Cleaning services llc
Contact Name	Timothy Hammond
Address	105 Lovers Ln , Waynesboro, GA 30830
Email	timothyhammondtim@hotmail.com
Phone Number	706-751-8821

Documents

Filename	Type	Action
22-253_RFP	Bid Document / Specifications	View History
22-253_ADD1	Addendum	View History

Commission Meeting

March 7, 2023

Contract with RW Allen Construction in the amount of $2,660,428.00 to perform all tasks related to the Augusta Regional Airport (AGS) Fuel Farm Improvement Project - Base Bid 22-244A

Department: Augusta Regional Airport

Presenter: Herbert Judon

Caption: Motion to **approve** a construction contract with RW Allen Construction in the amount of $2,660,428.00 to perform all tasks related to the Augusta Regional Airport (AGS) Fuel Farm Improvement Project - Base Bid Item 22-244A. Approved by the Augusta Aviation Commission on February 10, 2023.**(Approved by Public Services Committee February 28, 2023)**

Background: The existing fuel farm was constructed in the mid 1960's and has exceeded its useful life. Staff has experienced frequent issues with breakdowns and Augusta Regional Airport is currently under multiple waivers in order to stay in service due to being out of compliance. This improvement effort includes but is not limited to, the installation of four (4) new 30,000 gallon Double-Walled Horizontal Jet A Fuel Tanks and associated containment pad, foundations, piping, pumps, etc., rehabilitation of the existing Mogas, Diesel, and LL-100 tanks and piping, installation of a new 16' x 20' testing building, installation of approximately 1100 LF of new perimeter fence, installation of new vehicle gate and card reader, installation of new lighting and security devices, demolition and removal of the four (4) existing vertical Jet-A Tanks containment pad, foundations, piping, pumps, etc., the demolition and removal of one (1) existing horizontal Jet-A Tank and associated foundations, piping, pumps, etc., and the demolition of approximately 1150 LF of existing perimeter fence.

On December 8, 2022, Airport Staff recommended Award for the Overall Fuel Farm Improvement project to RW Allen Construction.

Analysis: 2 bids were received. RW Allen Construction was the lowest most responsive bidder. The original Base Bid was in the amount of $2,898,895.00. Staff entered into negotiations with RW Allen Construction and was able to find savings of $238,467.00. Recommended bid award is in the amount of $2,660,428.00

Financial Impact: This project will be funded via Airport enterprise funds.

Alternatives: To deny.

Recommendation: Recommend Approval. Approved by the Augusta Aviation Commission on February 10, 2023.

Funds are available in the following accounts:	551081306-5412110
<u>REVIEWED AND APPROVED BY:</u>	N/A

RW Allen Construction, LLC

AGS Fuel Farm Facility

1/11/2023

Proposed Cost Savings Summary Table

Item #	Item Description	Original Bid Amount	Revised Bid Amount	Savings
17 P-101.2	Removal Pipe Buried Structures	$4,500	$2,250	($2,250)
17 P-101.5	PCC Paverrment Removal Offsite	$30,446	$16,000	($14,446)
22 X-150.2	Misc. Site Demo	$14,000	$12,250	($1,750)
23 NS-001.1	Demo Rem, E Xt Jet A tanks fdn Pipe & Pumps	$143,709	$91,645	($52,064)
30 GDOT 400.1	4" GDOT 12.55 Superpave	$41,565	$12,750	($28,815)
33 GDOT 430.1	8" Portland Cement Concrete Paving	$132,500	$65,081	($67,419)
36 X-501.1	Jet Fuel Concrete Containment Pad	$164,450	$126,104	($38,346)
38 F-162.1	Remove airfield perimeter fence	$19,550	$2,750	($16,800)
40 F-162.3	Install auto vehicle gate	$33,134	$22,572	($10,562)
50 A-001	16' x 20' Test Building	$145,149	$139,134	($6,015)

Total Savings	**($238,467.00)**

Original Bid Proposal	**$2,898,895.00**		**$2,898,895.00**
Estimated Cost Options Offered			**($238,467.00)**
Revised Bid Proposal w/ Cost Options	**$2,898,895.00**		**$2,660,428.00**

NOTICE OF AWARD

TO:

PROJECT: **AUGUSTA REGIONAL AIRPORT FUEL FARM IMPROVEMENTS**

The Owner has considered the bid submitted by you for the above described WORK in response to its Advertisement for Bids and Information for Bidders.

You are hereby notified that your bid has been accepted for items in the amount of $_____.

You are required by the Invitation to Bid to execute the Contract and furnish the required Contractor's Performance and Payment Bonds within fifteen (15) calendar days from the date of this Notice to you.

If you fail to execute said Contract and to furnish said bonds within fifteen (15) days from the date of this Notice, said Owner will be entitled to consider all rights arising out of the Owner's acceptance of your bid as abandoned and as a forfeiture of your Bid Bond. The Owner will be entitled to such other rights as may be granted by law.

You are required to return an acknowledged copy of this NOTICE OF AWARD to the Owner.

Dated this ____ day of _____, 202_ .

AUGUSTA REGIONAL AIRPORT

BY: _____

TITLE: _____

*** ACCEPTANCE OF NOTICE ***

Receipt of the above NOTICE OF AWARD is hereby

acknowledged by _____

this the _____ day of _____, 20_____.

BY:_____

TITLE:_____

PERFORMANCE BOND

(NOTE: THIS BOND IS ISSUED SIMULTANEOUSLY WITH PAYMENT BOND, IN FAVOR OF THE OWNER CONDITIONED FOR THE PAYMENT OF LABOR AND MATERIAL.)

KNOW ALL MEN BY THESE PRESENTS:

That _____as Principal,

hereinafter called CONTRACTOR, and _____, a

corporation organized and existing under the laws of the State of _____, with

its principal office in the City of _____, State of _____, as Surety, hereinafter called SURETY, are held and firmly bound unto AUGUSTA, GEORGIA BY AND THROUGH THE AUGUSTA-RICHMOND COUNTY COMMISSION as Obligee, hereinafter called the OWNER, in the penal amount of _____ Dollars ($_____) for the payment whereof CONTRACTOR and SURETY bind themselves, their heirs, executors, administrators, successors, and assigns, jointly and severally, firmly by these presents for the faithful performance of a certain written agreement.

WHEREAS, CONTRACTOR has by said written agreement dated _____ entered into a Contract with OWNER for the construction of **AUGUSTA REGIONAL AIRPORT FUEL FARM IMPROVEMENTS**, Augusta, Georgia, in accordance with the drawings and specifications issued by the Augusta Aviation Commission and the Augusta-Richmond County Commission, which contract is by reference made a part hereof, and is hereinafter referred to as the Contract.

NOW, THEREFORE, the condition of this obligation is such that, if CONTRACTOR shall promptly and faithfully perform said Contract, then this obligation shall be null and void; otherwise it shall remain in full force and effect.

The SURETY hereby waives notice of any alteration or extension of time made by the OWNER.

Whenever CONTRACTOR shall be, and declared by OWNER to be in default under the Contract, the OWNER having performed OWNER's obligations thereunder, the SURETY may promptly remedy the default, or shall promptly

(1) Complete the Contract in accordance with its terms and conditions, or

(2) Obtain a bid or bids for completing the Contract in accordance with its terms and conditions, and upon determination by SURETY of the lowest responsive and responsible bidder, or, if the OWNER elects, upon determination by the OWNER and the SURETY jointly of the lowest responsive and responsible bidder, arrange for a contract between such bidder and OWNER, and make available as Work progresses (even though there should be a default or a succession of defaults under the contract or contracts of completion arranged under this paragraph) sufficient funds to pay the cost of completion less the balance of the Contract price; but not exceeding, including other costs and damages for which the SURETY may be liable hereunder, the amount set forth in the first paragraph hereof. The term "balance of the Contract price," as used in this paragraph, shall mean the total amount payable by OWNER to CONTRACTOR under the Contract and any amendments thereto, less the amount properly paid by OWNER to CONTRACTOR.

Any suit under this bond must be instituted before the expiration of two (2) years from the date on which final payment under the Contract falls due.

No right of action shall accrue on this bond to or for the use of any person or corporation other than the OWNER named herein or the heirs, executors, administrators or successors of the OWNER.

Signed and sealed this _____ day of _____ A.D. 20___.

Witness_____ _____(Seal)
(Contractor)

Attest_____ By_____(Seal)
(Title)

Witness_____ _____(Seal)
(Surety)

Attest_____ By_____(Seal)
(Title)

LABOR AND MATERIAL PAYMENT BOND

(NOTE: THIS BOND IS ISSUED SIMULTANEOUSLY WITH PERFORMANCE BOND, IN FAVOR OF THE OWNER CONDITIONED FOR THE PERFORMANCE OF THE WORK.)

KNOW ALL MEN BY THESE PRESENTS:

That _____as Principal,

hereinafter called CONTRACTOR, and _____

a corporation organized and existing under the laws of the State of _____, with

its principal office in the City of _____, State of _____, as Surety, hereinafter called SURETY, are held and firmly bound unto AUGUSTA, GEORGIA BY AND THROUGH THE AUGUSTA-RICHMOND COUNTY COMMISSION, as Obligee, hereinafter called the OWNER, for the use and benefit of claimants as herein below defined in the amount of _____Dollars ($_____) for the payment whereof CONTRACTOR and SURETY bind themselves, their heirs, executors, administrators, successors, and assigns, jointly and severally, firmly by these presents.

WHEREAS, CONTRACTOR has by written agreement dated _____ entered into a Contract with Owner for the construction of **AUGUSTA REGIONAL AIRPORT FUEL FARM IMPROVEMENTS**, in accordance with drawings and specifications issued by the Augusta Aviation Commission and Augusta-Richmond County Commission, which Contract is by reference made a part hereof, and is hereinafter referred to as the CONTRACT.

NOW, THEREFORE, the condition of this obligation is such that, if the CONTRACTOR shall promptly make payment to all claimants as hereinafter defined, for all labor and material used or reasonably required to use in the performance of the Contract, then this obligation shall be void; otherwise it shall remain in full force and effect, subject, however, to the following conditions:

(1) A claimant is defined as one having a direct contract with the CONTRACTOR or with a subcontractor of the CONTRACTOR for labor, material, or both, used or reasonably required for use in the performance of the Contract labor and material being construed as to include that part of water, gas, power, light, heat, oil, gasoline, telephone service or rental of equipment directly applicable to the Contract.

(2) The above named CONTRACTOR and SURETY hereby jointly and severally agree with the OWNER that every claimant as herein defined, who has not been paid in full before the expiration of a period of ninety (90) days after the date on which the last of such claimant's work or labor was done or performed, or materials were furnished by such claimant, may sue on this bond for the use of such claimant, prosecute the suit to final judgment for such sum or sums as may be justly due claimant, and have execution thereon. The OWNER shall not be liable for the payment of any costs or expenses of any such suit.

(3) No suit or action shall be commenced hereunder by any claimant,

(a) Unless claimant, other than one having a direct contract with the CONTRACTOR, shall have given written notice to any two of the following: The CONTRACTOR, the OWNER, or the SURETY above named, within ninety (90) days after such claimant did or performed the last of the work or labor, or furnished the last of the materials for which said claim is made, stating with substantial accuracy the amount claimed and the name of the party to whom the materials were furnished,

or for whom the work or labor was done or performed. Such notice shall be served by mailing the same by registered mail or certified mail, postage prepaid, in an envelope addressed to the CONTRACTOR, OWNER or SURETY, at any place where an office regularly maintained for the transaction of business or served in any manner in which legal process may be served in the state in which the aforesaid project is located, save that such service need not be made by a public officer.

(b) After the expiration of one (1) year following the date on which CONTRACTOR ceased work on said Contract, it being understood, however, that if any limitation embodied in this bond is prohibited by any law controlling the construction hereof, such limitation shall be deemed to be amended so as to be equal to the minimum period of limitation permitted by such law.

(c) Other than in a Georgia state court of competent jurisdiction in and for the county or other political subdivision of the state in which the project, or any part thereof, is situated, or in the United States District Court for the district in which the project, or any part thereof, is situated, and not elsewhere.

(4) The amount of this bond shall be reduced by and to the extent of any payment or payments made in good faith hereunder, inclusive of the payment by SURETY of mechanics' liens which may be filed of record against said improvement, whether or not claim for the amount of such lien be presented under and against this bond.

Signed and sealed this _____ day of _____ A.D. 20___.

Witness_____ _____(Seal)
(Contractor)

Attest_____ By_____(Seal)
(Title)

Witness_____ _____(Seal)
(Surety)

Attest_____ By_____(Seal)
(Title)

NOTICE TO PROCEED

DATE: _____

SUBJECT: NOTICE TO PROCEED
PROJECT: **AUGUSTA REGIONAL AIRPORT FUEL FARM IMPROVEMENTS**

Gentlemen:

You are hereby notified to commence work in accordance with the Contract, within Ten (10) calendar days following the date first written above, and you are to complete the work within _____ (___) consecutive calendar days after the date of this notice. The date set for completion of all work is therefore _____.

AUGUSTA REGIONAL AIRPORT

BY: _____

TITLE: _____

*** ACCEPTANCE OF NOTICE ***

Receipt of the above NOTICE TO PROCEED is hereby
acknowledged by _____
this the _____ day of _____, 20_____.

TITLE:_____

CONTRACT

THIS CONTRACT made and entered into to be effective _____, 2023 by and between, AUGUSTA GEORGIA, "Augusta," a political subdivision of the State of Georgia, acting through the AUGUSTA AVIATION COMMISSION, whose address is 1501 Aviation Way, Augusta Regional Airport at Bush Field, Augusta, Georgia 30906-9600, hereinafter called "Airport", and _____, hereinafter called "Contractor".

WITNESSETH:

WHEREAS, Augusta is the owner and operator of a full-service commercial airport known as the Augusta Regional Airport;

WHEREAS, Augusta has solicited a bid to the Fuel Farm Improvements for the Airport;

WHEREAS, the Contractor submitted a bid for said services; and

WHEREAS, Augusta, on behalf of the Airport, accepted the Contractor's Bid for said services;

NOW THEREFORE, in consideration of the mutual covenants, promises, and agreements herein contained, Augusta and the Contractor hereby agree as follows:

The Contractor's Services shall be in accordance with the scope of services and all provisions provided herein.

ARTICLE 1
SCOPE OF THE WORK

1.1 The Contractor hereby agrees to furnish all of the materials and all of the equipment and labor necessary, and to perform all of the work shown on the Plans and described in the specifications for the Project entitled:

AUGUSTA REGIONAL AIRPORT FUEL FARM IMPROVEMENTS – BASE BID

and in accordance with the requirements and provisions of the Contract Documents as defined in the Provisions hereto attached which are hereby incorporated and made a part of this contract.

1.2 **Definitions**

The following terms have the following meanings whenever used in the Contract Documents (defined below), or in related documents, the terms or pronouns used in place of them shall be defined as follows:

1.2.1 **Airport Executive Director**. The person tasked with the day-to-day operations of the Airport.

1.2.2 **Augusta Aviation Commission**. The Augusta Regional Airport Aviation Commission tasked with the overall administration of the Airport.

1.2.3 **Augusta, Georgia or City or Owner**. Augusta, Georgia's Commission.

1.2.4 **Engineer**. The Work has been designed by Mead & Hunt, Inc., whose corporate headquarters is located at 2240 Deming Way, Middleton, WI 53562, who is hereinafter called Engineer and who is to assume all duties and responsibilities and have the rights and authority assigned to Engineer in the Contract Documents in connection with completion of the Work in accordance with the Contract Documents.

1.2.5 **Project**. Augusta Regional Airport Fuel Farm Improvements Base Bid, including, but not limited to, the installation of four (4) new 30,000 gallon Double-Walled Horizontal Jet A Fuel Tanks and associated containment pad, foundations, piping, pumps, etc., rehabilitation of the existing Mogas, Diesel, and LL-100 tanks and piping, installation of a new 16' x 20' testing building, installation of approximately 1100 LF of new perimeter fence, installation of new vehicle gate and card reader, installation of new lighting and security devices, demolition and removal of the four (4) existing vertical Jet-A Tanks containment pad, foundations, piping, pumps, etc., the demolition and removal of one (1) existing horizontal Jet-A Tank and associated foundations, piping, pumps, etc., and the demolition of approximately 1150 LF of existing perimeter fence.

1.2.6 **Airport's Administrator**. Airport's Representative shall be the Airport's Executive Director or his designee.

1.2.7 **Contractor's Representative(s)**. The Contractor's representative ("Contractor's Representative") for all dealings with Airport shall be _____. Contractor's Representative may be changed upon prior written notice delivered to Owner.

1.3 Subject to controlling law, the Owner will refuse to permit the Contractor to use any employee on this job if the Owner reasonably deems that individual unfit to work at the Airport facilities in any respect.

1.4 All Contractor employees shall strictly adhere to Airport regulations while on the Airport premises, including but not limited to Augusta, Georgia, County, and Transportation Security Authority (TSA) and Federal Aviation Administration (FAA) regulations governing access to buildings, personal conduct, and possession of prescribed substances, parking, and traffic. The Owner reserves the right to require the removal of Contractor employees from the Project.

1.5 **Design, Standards and Practices**. The design, strength, quality of materials and workmanship must conform to the highest standards of construction practices and/or services.

ARTICLE II
TERM

2.1 The Contractor must begin work within ten (10) calendar days of receiving the Notice to Proceed (NTP) from the Owner. It is anticipated the NTP will be issued February 28, 2023. The Contractor will mobilize with sufficient forces such that all work is completed within one hundred and eighty (180) calendar days after the issuance of the NTP. Contract time charges will begin as set forth in Section 80 of the General Provisions.

2.2 Contractor working times shall be as designated on the Construction Safety & Phasing Plan sheets in the Construction Drawings. At the Owner's discretion, work times may be further restricted.

2.3 For additional details please review Section 80 of the attached Specifications.

2.4 It is hereby understood and mutually agreed, by and between the Contractor and the Owner, that the date of beginning, rate of progress and the time for completion of the work to be done hereunder are ESSENTIAL CONDITIONS of this Contract. Contractor agrees that said work shall be prosecuted regularly, diligently, and uninterruptedly at such rate of progress as will ensure full completion thereof within the time specified. It is expressly understood and agreed by and between the Contractor and the Owner, that the time for the completion of the work described herein is a reasonable time for the completion of the same, taking into consideration the average climatic range and construction conditions prevailing in this locality.

2.5 It is further agreed that **time is of the essence** of each and every portion of this Contract and the specifications wherein a definite portion and certain length of time is fixed for the performance of any act whatsoever; and where under the Contract an additional time is allowed for the completion of any work, the new time limit fixed by extension shall be the essence of the Contract.

ARTICLE III
LIQUIDATED DAMAGES

3.1 The Contractor acknowledges that time is of the essence with respect to the Work governed by the Contract. The Contractor acknowledges and recognizes that if it fails to achieve Substantial Completion of any portion of the Work within the Contract Time as may be extended in accordance with the terms of this Contract, the Owner will sustain substantial losses as a result of such failure. The Contractor further acknowledges that the Owner will suffer damages that are difficult, if not impossible, to accurately estimate. The Contractor shall be assessed liquidated damages as set forth in Section 80, Execution and Progress, subsection 80-08.

ARTICLE IV
PAYMENT

4.1 **The Contract Sum**

The Owner shall pay to the Contractor for completion of the Work in strict accordance with the Contract Documents, and in accordance with the unit bid prices submitted on _____, with a contract price of $2,660,428.00.

4.2 **Progress Payments**

4.2.1 Contractor shall submit Applications for Payment in accordance with Section 90 of the General Provisions but in no case shall submit Applications for Payment more than once per month. Application for Payment will be processed by Engineer as provided in the General Provisions.

4.2.2 Progress payments will be made in an amount equal to the percentage indicated below, but, in each case, less the aggregate of payments previously made and less such amounts as Engineer shall determine, or Owner may withhold, in accordance with Section 90 of the General Provisions.

1) 90% of Work completed as determined by Engineer.
2) 90% of materials and equipment not incorporated in the Work (but delivered, suitably stored and accompanied by documentation satisfactory to Owner as provided in paragraph 90-07 of the General Provisions.

4.2.3 Within ten (10) business days of receiving each Application for Payment, the Engineer shall either indicate in writing a recommendation of payment and present the application to the Owner or return the Application to the Contractor indicating in writing necessary corrections. In the latter case, the Contractor shall make the corrections and resubmit the application.

4.3 **Invoices**.

Contractor shall submit invoices to:
Mead & Hunt, Inc.
Attn: Edwin Scott
5955 Core Road, Suite 515
North Charleston, SC 29406

4.4 **Retainage and Partial Payments**. If payment request is approved by the Owner, the approved payment request shall be submitted to the Owner's Finance Department for processing on or before the fifth day of the following month, and payment (less retainage) shall be made to the Contractor thirty (30) calendar days after the date the approved payment request is received by the Owner's finance department. If a payment request is not approved by the Owner, then no payment shall be made to the Contractor until such time as the Owner approves the payment request. The amount of retainage shall be as follows:

4.4.1 Ten percent (10%) of each partial payment shall be withheld as retainage until the value of fifty percent (50%) of the Contract Price, including Change Orders and other authorized additions provided in the Contract, is due;

4.4.2 When fifty percent (50%) of the Contract Price, as described above, becomes due and the manner of completion of the Work and its progress, quality, schedule are reasonably satisfactory to the Owner, and there are no outstanding claims by the Contractor, subcontractors or material suppliers, the withholding of retainage shall be discontinued.

4.4.3 If after discontinuing retainage, the Owner determines that the Work is unsatisfactory or has fallen behind schedule, withholding of ten percent (10%) of each request for payment may be resumed. When the Work has reached Substantial Completion and the Owner determines the Work to be reasonably acceptable, the Contractor shall submit an invoice or other documents as may be required and receive payment thereof within thirty (30) calendar days. If there are any remaining incomplete minor items, an amount equal to two hundred percent (200%) of the value of each item, as determined by the Owner, shall be withheld until such items are complete.~~;~~

4.4.4 The Contractor shall within ten (10) calendar days from its receipt of retainage from the Owner pass through payments to Subcontractors and shall reduce each Subcontractor's retainage in the same manner as the Contractor's retainage is reduced by the Owner. The Subcontractor shall within ten (10) calendar days from the Subcontractor's receipt of retainage pass through payments to lower tier subcontractor's and shall reduce each lower tier subcontractor's retainage in the same manner as the Subcontractor's retainage is reduced.

4.4.5 The Contractor and Owner agree to abide by all applicable provisions of Georgia State Law concerning retainage, including but not limited to O.C.G.A. §13-10-80. If the terms of

this Contract concerning retainage conflict with Georgia State Law, Georgia State Law shall govern.

ARTICLE V
FINAL INSPECTION

5.1 Upon notice from the Contractor that the Work is completed, the Owner shall make a Contractor during the course of final inspection of the Work and shall notify the Contractor of all instances where the Work fails to comply with the Drawings and Specifications, as well as any defects the Owner may discover. At no cost to the Owner, the Contractor shall immediately make such alterations as are necessary to bring the Work into compliance with the Contract, the Drawings, and Specifications.

ARTICLE XI
ACCEPTANCE AND FINAL PAYMENT

6.1 **Final Payment**. Upon final completion and acceptance of the Work in accordance with Section 50 of the General Provisions, Owner shall pay the remainder of the Contract Price as recommended by Engineer as provided in said paragraph 90-09.

6.2 Before final payment is due the Contractor shall submit evidence satisfactory to the Engineer that all payrolls, material bills, and other indebtedness connected with the work have been paid, except that in case of disputed indebtedness or liens the Contractor may submit in lieu of evidence of payment a surety bond satisfactory to the Owner guaranteeing payment of all such disputed amounts when adjudicated in cases where such payment has not already been guaranteed by surety bond.

6.3 The making and acceptance of the final payment shall constitute a waiver of all claims by the Owner other than those arising from unsettled liens, from faulty work appearing within twelve (12) months after final payment, from requirements of the specifications, or from manufacturers' guarantees. It shall also constitute a waiver of all claims by the Contractor except those previously made and still unsettled.

6.4 If after the Work has been substantially completed, full completion thereof is materially delayed through no fault of the Contractor, and the Engineer, so certifies, the Owner shall upon certificate of the Engineer, and without terminating the Contract, make payment of the balance due for that

portion of the Work fully completed and accepted. Such payment shall be made under the terms and conditions governing final payment, except that it shall not constitute a waiver of claims.

ARTICLE VII
CHANGES

7.1 The Owner may, during the Contract period, make changes to the Scope of Work, which may result in changes to the general scope of the Contract and its provisions.

7.2 Written/verbal agreements, changes, or amendments to this Contract shall not be binding upon the Owner unless approved and signed by the Owner in advance of performing work.

7.3 Contractor acknowledges that this contract and any changes to it by amendment, modification, change order or other similar document may have required or may require the legislative authorization of the Augusta Aviation Commission or Augusta, Georgia Board of Commissioners and approval of the Mayor. Under Georgia law, Contractor is deemed to possess knowledge concerning Augusta, Georgia's ability to assume contractual obligations and the consequences of Contractor's provision of goods or services to Augusta, Georgia under an unauthorized contract, amendment, modification, change order or other similar document, including the possibility that the Contractor may be precluded from recovering payment for such unauthorized goods or services. Accordingly, Contractor agrees that if it provides goods or services to Augusta, Georgia under a contract that has not received proper legislative authorization or if the Contractor provides goods or services to Augusta, Georgia in excess of the any contractually authorized goods or services, as required by Augusta, Georgia's Charter and Code, Augusta, Georgia may withhold payment for any unauthorized goods or services provided by Contractor. Contractor assumes all risk of non-payment for the provision of any unauthorized goods or services to Augusta, Georgia, and it waives all claims to payment or to other remedies for the provision of any unauthorized goods or services to Augusta, Georgia, however characterized, including, without limitation, all remedies at law or equity.

ARTICLE VIII
INSURANCE

8.1 During the term of this Contract, Contractor shall provide, pay for, and maintain with companies reasonably satisfactory to the Owner the types of insurance as set forth in the Augusta Code, and

Georgia Law as the same may be amended from time to time, and as described herein. All insurance shall be issued by insurance companies eligible to do business in the State of Georgia and Best Rated A+ or equivalent. In the event of a conflict between the provisions of the Augusta Code and this Contract, the more stringent requirement shall govern. In no event shall Contractor maintain any insurance less than the requirements set forth in the Augusta Code, as amended.

8.2 All liability policies of Contractor and its subcontractors shall provide coverage that includes, or has the same substantive effect as the following:

8.2.1 Augusta, Georgia, the Augusta Aviation Commission, and each of its Commissioners, officers, agents, elected representatives, volunteers, and employees, in their respective capacities as such, shall be additional insured hereunder with respect to the products, premises, and operations of the named insured.

8.2.2 This insurance policy shall apply as primary, and any insurance and/or self-insurance as may be maintained by the Augusta, the Augusta Aviation Commission, or its Commissioners, officers, agents, elected representatives, volunteers, and employees shall apply in excess of, and shall not contribute with insurance provided by this policy."

8.2.3 This insurance shall not be materially changed, altered, canceled, or non-renewed until after thirty (30) calendar days advanced written notice has been given to Augusta, Georgia except that only ten (10) calendar days' notice shall be required in the event of cancellation due to non-payment of premium.

8.3 All such evidence of insurance shall be in the form of certificates of insurance satisfactory to the Augusta and its Risk Manager, accompanied by a certified true copy of an endorsement to each policy containing the above language. Properly executed certificates of insurance shall evidence the insurance coverage and limits required. The authorized representative of the insurance company shown on the certificate shall sign these certificates. The required policies of insurance shall comply with the laws of the State of Georgia.

8.4 If at any time the Executive Director requests a written statement from the insurance company as to any impairment to the aggregate limit, Contractor shall promptly authorize and have delivered such statement to the Augusta Aviation Commission. Contractor authorizes the Augusta Aviation Commission and/or the Augusta's Risk Manager to confirm with Contractor's insurance agents, brokers, and insurance companies all information furnished.

8.5 The acceptance of delivery to the Owner of any certificate of insurance evidencing the insurance coverage and limits required under this Contract does not constitute approval or acceptance by the Owner that the insurance requirements in this Contract have been met. No operations shall commence at the Airport unless and until the required certificates of insurance are in effect and approved by the Augusta's Risk Manager.

8.6 The Contractor and the Owner understand and agree that the minimum limits of the insurance herein required may, from time to time, become inadequate, and Contractor agrees that it will increase such minimum limits upon receipt of written notice defining the basis of the increase. The Contractor shall furnish the Owner, within sixty (60) calendar days of the effective date thereof, a certificate of insurance evidencing that such insurance is in force.

8.7 Contractor's insurance companies or its authorized representative shall give the Owner thirty (30) calendar days prior written notice of any cancellation, intent not to renew, or material reduction in any policy's coverage, except in the application of the Aggregate Limit Provisions. In the event of a reduction to the Aggregate Limit, it is agreed that immediate steps will be taken to have the prior Aggregate Limit reinstated.

8.8 If at any time, the Airport Executive Director requests a written statement from the insurance companies as to any impairment(s) to the Aggregate Limit, prompt authorization and delivery of all requested information will be given to the Augusta Aviation Commission. Renewal Certificates of Insurance must be provided to the Owner as soon as practical but in every instance prior to expiration of current coverage.

8.9 The amounts and types of insurance shall conform to the following minimum requirements with the use of Insurance Service Office policies, forms, and endorsements or broader, where applicable. Notwithstanding the foregoing, the wording of all policies, forms, and endorsements must be reasonably acceptable to the Owner.

8.10 Workers' Compensation and Employer's Liability Insurance shall be maintained in force by Contractor during the term of this Contract for all employees engaged in the operations under this Contract. The limits of coverage shall not be less than:

Workers' Compensation	Georgia Statutory
Employer's Liability	$1,000,000.00 Limit Each Accident $1,000,000.00 Limit Disease Aggregate $1,000,000.00 Limit Disease Each Employee

8.11 **Commercial General Liability** – Occurrence Form. Policy shall include bodily injury, property damage, personal injury and broad form contractual liability coverage with limits no less than five million dollars ($5,000,000.00) in Broad Form Comprehensive General Liability insurance.

8.12 **Automobile Liability Insurance**. For any vehicles authorized in writing by the Executive Director to operate on the Aircraft Operating Area (AOA) of the Airport, Automobile Insurance in the minimum amount of Five Million Dollars ($5,000,000.00) combined single limit coverage. If the Contractor's Comprehensive General Liability coverage includes vehicular operations on the Airport, separate automobile insurance shall not be required. The foregoing insurance shall be endorsed to state that it will be primary to the Augusta, Georgia and the Augusta Aviation Commission's insurance and that the carrier waives its right of subrogation against Augusta, Georgia, the Augusta Aviation Commission, and their officers, agents, elected and appointed officials, representatives, volunteers, and employees. Augusta, Georgia, the Augusta Aviation Commission, and their officers, agents, employees, elected and appointed officials shall be added as additional insureds on said policies. Said policy shall contain Severability of Interest Clause and shall include contractual liability coverage at least as broad as that given in the most current CA 00 01 ISO form.

8.13 **Excess Liability**: $2,000,000.00

Policy must follow form of General Liability Policy and all insurance together for general liability must total at least a minimum of two million dollars ($2,000,000.00). Any form of underlying and excess policies may satisfy such requirement.

8.14 The Commercial General Liability Insurance coverage as required in the paragraph above shall include those classifications, as listed in Standard Liability Insurance Manuals, which are applicable to the operations of the Contractor in the performance of this Contract.

8.15 Within sixty (60) calendar days of the effective date thereof or any subsequent term, Contractor shall provide Owner with certificate(s) of insurance evidencing that such insurance as described

herein be in force. Insurance binder letter(s) or a Certificate(s) of Insurance as described above must be sent to the address below with a copy to the Owner:

Augusta, Georgia
Risk Management
535 Telfair Street
Suite 920
Augusta, GA 30901
(706) 821-2502 (Fax)

8.16 **Subcontractors**. It is the sole responsibility of the general Contractor to ensure that all subcontractors working under it have separately procured any and all types and limits of insurance that are required under any and all pertinent local, state, or federal ordinances or resolutions that are suitable for the particular trade that the subcontractor is performing. It is also the sole responsibility of the general and/or prime Contractor to ensure that any and all subcontractors or vendors carry types and limits of insurance not less than those listed herein and that the subcontractors and/or vendors carry and/or procure endorsements to waive all subrogation rights against and name "Augusta, Georgia, its appointed and elected Officials, departments, agencies, boards, commissions, its officers, agents, employees and volunteers" as additional insureds.

ARTICLE IX
AIRPORT SECURITY REQUIREMENTS

9.1 Contractor's employees shall be required to operate in Airport's secure areas. Contractor shall be required to obtain the Airport's Security Identification Display Area (SIDA) badges for any employee working in the secured area. Contractor shall comply, at its own expense, with the Transportation Security Administration (TSA) and the Owner's security requirements for the Airport including, but not limited to employee training and badges. Contractor shall cooperate with the TSA and the Owner on all security matters and shall promptly comply with any project security arrangements established by the Owner. Compliance with such security requirements shall not relieve Contractor of its responsibility for maintaining proper security for the above-noted items, nor shall it be construed as limiting in any manner Contractor's obligation with respect to all applicable federal, state and local laws and regulations and its duty to undertake reasonable action to establish and maintain secure conditions at and around the Project and throughout the Airport. All employees shall be properly badged and comply with all Owner's safety and security rules.

9.2 Any Contractor employees assigned to work in a secured area are required to be "badged" or a "badged" Contractor employee must escort them the entire time they are in these secured areas.

9.3 To qualify for the badge, individual must be fingerprinted and have a background investigation completed. In addition, the Owner will conduct a background inquiry and require finger printing of all individuals who will be working on the secured side of the Airport screening point. This may also include collection of appropriate criminal history information, contractual and business associations and practices, employment histories, reputation in the business community and credit reports for the Contractor, as well as its employees.

9.4 Contractor consents to such an inquiry and agrees to make available to the Owner such books and records the Owner deems necessary to conduct the review.

9.5 Contractor shall pay all costs associated with providing SIDA badges.

9.6 Contractor shall be responsible for any fines assessed by the FAA or TSA as a result of the actions of its employees or subcontractors.

ARTICLE X
REPRESENTATIONS AND WARRANTIES

In order to induce the Owner to enter into this Contract, Contractor hereby represents and warrants that as of the date above written that:

10.1 Contractor is duly organized and validly existing in good standing under the laws of the State of _____ in which it is organized, is qualified to do business in all jurisdictions in which it is operating, and has the power and authority to execute and deliver and to perform its obligations under this Contract and the documents to which it is signatory; and

10.2 The execution, delivery and performance by Contractor and its undersigned representative(s) of this Contract and other documents to which Contractor is a signatory do not require the approval or consent of any other person, entity or government agency and do not result in any breach of any agreement to which Contractor is a party or by which it is bound; and

10.3 The execution, delivery and performance by Contractor of this Contract and other documents to which it is a signatory have been duly authorized by all necessary action, and constitute legal, valid and binding obligations of Contractor, enforceable against Contractor in accordance with its terms; and

10.4 No action, suit or proceeding to which Contractor is a party is pending or threatened that may restrain or question this Contract, or any other document to which it is a signatory, or the enjoyment of rights or benefits contemplated herein; and

10.5 Contractor has all State of Georgia Licenses and permits required for the performance of the Work and shall only use properly licensed and trained persons to perform such services.

ARTICLE XI
NOTICES

11.1 **Delivery**. All notices given by either party to the other under this Contract must be in writing and delivered by: (i) regular mail, postage prepaid; (ii) certified or registered mail; (iii) facsimile; or (iv) hand - delivery, to the parties at the addresses and facsimile numbers set forth in the Clause titled "Addresses".

11.2 **Receipt**. Notices sent by mail will be deemed to be received upon deposit in the mail, properly addressed. Notices sent by certified or registered mail will be deemed to be received upon the date of the acknowledgment. Notices sent by facsimile will be deemed to be received upon successful transmission to the proper facsimile number. Notices delivered by hand- delivery will be deemed to be received upon acceptance by the respective party or its agent.

11.3 **Change of Address or Facsimile Number**. Either party may, at any time, change its respective address or facsimile number by sending written notice to the other party of the change.

11.4 **Addresses**.

To OWNER:	To CONTRACTOR:
Augusta Regional Airport Attn: Executive Director 1501 Aviation Way Augusta, Georgia 30906 Telephone: (706) 798-3236 Fax: (706) 798-1551	Attn: Telephone: Fax:

With a copy to:

Augusta General Counsel
Augusta Richmond County Department of Law
535 Telfair St.
Building 3000
Augusta, GA 30901
Fax: (706) 842-5556

ARTICLE XII
INDEMNIFICATION AND HOLD HARMLESS

12.1 Except where, and to the extent caused by the gross negligence of Augusta, Georgia, the Augusta Aviation Commission, their agents, employees, contractors, officers or, Contractor shall protect, defend, reimburse, indemnify, and hold Augusta, Georgia, the Augusta Aviation Commission, its members, agents, employees, and elected officers and each of them, free and harmless at all times as set forth in Augusta, Georgia Code, and particularly Article 1, Chapter 3, Division 1, Section 1-3-8.5, Indemnity and Insurance, as the same may be amended from time to time, and described herein. In the event of a conflict between the provisions of the Augusta Code and this Contract, the broader requirement shall govern.

ARTICLE XIII
PERMITS

13.1 Contractor shall obtain and maintain at all times all necessary licenses, permits and certifications to perform the work described in the Contract. Contractor shall furnish copies of all licenses, permits, and certifications to the Administrator.

ARTICLE XIV
WORK PERMITS REQUIRED

14.1 Contractor agrees and acknowledges that its employees and agent's employees, as well as any subcontractors or subcontractors' personnel, working on the Contract must be United States citizens, or must be lawfully admitted for residence and be permitted to work in the United States under the Immigration and Naturalization Act, 8 U.S.C. 1101, et. seq.

ARTICLE XV

FEDERAL WORK AUTHORIZATION

15.1 Pursuant to O.C.G.A. §13-10-91 and Georgia Department of Labor Rule 300-10-1-.02, the Owner cannot enter a contract for the physical performance of services unless the Contractor and its Subcontractors register and participate in the Federal Work Authorization Program to verify specific information on all new employees.

15.2 The Contractor certifies that it has complied and will continue to comply with O.C.G.A. §13-10-91 and Georgia Department of Labor Rule 300-10-1-.02.

15.3 The Contractor agrees to sign an affidavit evidencing its compliance with O.C.G.A. §13- 10-91 and Georgia Department of Labor Rule 300-10-1-.02. The signed affidavit is attached to this Contract as an exhibit

15.4 The Contractor agrees that in the event that it employs or contracts with any Subcontractor(s) in connection with this Contract, the Contractor will secure from each Subcontractor an affidavit that indicates the employee-number category applicable to that Subcontractor and certifies the Subcontractor's current and continuing compliance with O.C.G.A. §13-10-91 and Georgia Department of Labor Rule 300-10-1-.02. Any signed Subcontractor affidavit(s) obtained in connection with this Contract shall be attached hereto as an exhibit.

ARTICLE XVI
MISCELLANEOUS CONTRACT PROVISIONS

16.1 **Independent Contractor/Subcontractor**

Contractor is acting, in performance of this Contract, as an independent contractor. Personnel supplied by the Contractor or its agents or subcontractors hereunder are not the Owner's employees or agents and Contractor assumes full responsibility for their acts. Contractor shall be solely responsible for the payment of compensation to Contractor's employees. The Owner shall not be responsible for payment of Worker's Compensation, disability benefits, and unemployment insurance or for withholding and paying employment taxes for any Contractor employee, or Contractor's subcontractors or its agent's employees, but such responsibility shall be solely that of Contractor. This clause of the contract does not prevent the Airport from requiring Contractor to have its employees follow normal rules and guidelines for work performance, redirecting the efforts of the employees to meet the needs of the facilities, performing safety or from requiring Contractor to perform the requirements of this Contract satisfactorily, according to the General Conditions,

Scope of Services, Performance Work Statement, Service Performance Standards and Methods described herein.

16.2 **Force Majeure**

16.2.1 Neither party hereto shall be considered in default in the performance of its obligations hereunder to the extent that the performance of any such obligation, except the payment of money, is prevented or delayed by any cause, existing or future, which is beyond the reasonable control of the affected party, or by a strike, lockout or other labor difficulty, the settlement of which shall be within the sole discretion of the party involved.

16.2.2 Each party hereto shall give notice promptly to the other of the nature and extent of any Force Majeure claimed to delay, hinder or prevent performance of the services under this Contract. In the event either party is prevented or delayed in the performance of this obligation because of such Force Majeure, there shall be an equitable adjustment of the schedule.

16.2.3 Contractor will not be liable for failure to perform or for delay in performance because of Force Majeure, including the following:

16.2.3.1 any cause beyond its reasonable control;
16.2.3.2 any act of God;
16.2.3.3 inclement weather;
16.2.3.4 earthquake;
16.2.3.5 fire;
16.2.3.6 explosion;
16.2.3.7 flood;
16.2.3.8 strike or other labor dispute;
16.2.3.9 any shortage or disruption of or inability to obtain labor, material, manufacturing facilities, power, fuel or transportation from unusual sources, or any other;
16.2.3.10 delay or failure to act of any governmental or military authority;
16.2.3.11 any war, hostility or invasion;
16.2.3.12 any embargo, sabotage, civil disturbance, riot or insurrection;
16.2.3.13 any legal proceedings; or
16.2.3.14 failure to act by Contractor's suppliers due to any cause which Contractor is not responsible, in whole or in part.

16.2.3.15 any disease, epidemic, or pandemic

16.3 **Commercial Activities**

Neither Contractor nor its employees may establish any commercial activity or issue concessions or permits of any kind to third parties for establishing activities at the Airport.

16.4 **Records and Audit**

Contractor and its subcontractors shall maintain records and accounts in connection with all aspects in the performance of this Contract, including those, which will accurately document incurred costs, both direct and indirect, of whatever nature, during and for a period of three (3) years from the expiration or other termination of this Contract, unless otherwise specified by applicable law. The Owner may examine and copy, at all reasonable times, with advance notification, those records and accounts. Contractor shall maintain all records in a central location in Augusta, Georgia.

16.5 **Contingent Fees**

Contractor warrants that it has not employed or retained any company or person, other than a bona fide employee working for Contractor, to solicit or secure this Contract; and that Contractor has not paid or agreed to pay any company, association, corporation, firm or person, other than a bona fide employee working for Contractor, any fee, commission, percentage, gift or any other consideration contingent upon or resulting from the award or making of this Contract. For the breach or violation of this warranty and upon a finding after notice and hearing, the Owner may terminate the Contract and, at its discretion, may deduct from the Contract sum, or otherwise recover the full amount of any such fee, commission, percentage, gift or consideration.

16.6 **Rights and Remedies**

The rights and remedies of the Owner provided in this paragraph are not exclusive and are in addition to any other rights and remedies provided by law or under this Contract.

16.7 **Non-Appropriations**

Notwithstanding anything contained in this Contract, if sufficient funds have not been appropriated to support continuation of this Contract for an additional calendar year or an additional term of the

Contract, this Contract shall terminate absolutely and without further obligation on the part of the Owner at the close of the calendar year of its execution or if the Owner suspends performance pending the appropriation of funds.

16.8 **Assignment**

Without the prior written consent of the Owner, Contractor may not assign, transfer or convey any of its interests under this Contract, nor delegate any of its obligations or duties under this Contract except as provided herein.

16.8.1 **Consent of the Owner Required**. Any assignment of this Contract or rights under this Contract, in whole or part, without the prior written consent of the Owner will be void, except that, upon ten-(10) calendar days prior written notice to the Owner, Contractor may assign monies due or to become due under this Contract. Any assignment of monies will be subject to proper setoffs in favor of the Owner and to any deductions provided for in this Contract.

16.8.2 **No Relief of Responsibilities**. No assignment will be approved which would relieve Contractor of its responsibilities under this Contract.

16.9 **Parties Bound**. This Contract will be binding upon and inure to the benefit of the Owner and Contractor and their respective successors and assigns.

16.10 **No Partnership or Joint Venture**. Nothing contained in this Contract will be deemed to create a partnership or joint venture between the Owner and Contractor or cause the Owner to be responsible for the debts or obligations of Contractor or any other party. Contractor must not represent to anyone that its relationship to the Owner is other than as the Owner's Contractor. Contractor must act as an independent agent and not as the agent of the Owner in performing this Contract and shall maintain complete control over its employees and all of its lower-tier suppliers and subcontractors. Nothing contained in this Contract or any lower tier purchase order or subcontract awarded by Contractor will create any contractual relationship between any lower-tier supplier or subcontractor and the Owner. No act or direction of the Owner shall be deemed to be the exercise of supervision or control of the Contractor's performance hereunder.

16.11 **Waiver**

The failure of the Owner to seek redress for any violation of or to insist upon the strict performance of, any term of this Contract will not prevent a subsequent violation of this Contract from being actionable by the Owner. The provision in this Contract of any particular remedy will not preclude the Owner from any other remedy.

16.12 **Compliance with Applicable Laws and Regulations**

Contractor covenants and agrees that it, its agents and employees shall comply with all Georgia, county, state, and federal laws, Airport Rules and Regulations, and Augusta, Georgia Ordinances applicable to the work to be performed under this Contract, and that it shall obtain all necessary permits, pay all license fees and taxes to comply therewith. Further, Contractor agrees that it, its agents, and employees will abide by all rules, regulations, and policies of Airport during the term of this Contract, including any renewal periods.

16.13 **Patent Indemnity**

Except as otherwise provided, the Contractor shall indemnify Augusta, Georgia and its Board of Commissioners, officers, agents and employees against liability, including costs and expenses for infringement upon any letters or patent of the United States arising out of the performance of this Contract or out of the use or disposal by or for the account of the Owner of supplies furnished or construction work performed hereunder.

16.14 **Use of Augusta, Georgia Landfill**

Contractor shall dispose of all debris and trash from the Airport will be transported to and disposed of at the Augusta, Georgia Solid Waste Landfill in accordance with local and state regulations. The Contractor shall provide evidence of proper disposal through manifests, which shall include the types of material disposed of, the name and location of the disposal facility, date of disposal and all related fees.

16.15 **Inspection**

The Owner may, at reasonable times, inspect the part of the plant, place of business, or work site of a contractor or subcontractor or subunit thereof which is pertinent to the performance of the contract.

16.16 **Temporary Suspension or Delay of Performance of Contract**

To the extent that it does not alter the scope of this Contract the Owner may unilaterally order a temporary stopping of the work or delaying of the work to be performed by the Contractor under this Contact.

16.17 **Entire Agreement**

This Contract, together with all of the attachments shall constitute the entire agreement between the parties and any prior understanding or representation of any kind preceding the date of this Contract shall not be binding upon either party except to the extent incorporated in this Contract.

16.18 **Governing Law**

This Contract will be construed under Georgia law, including the Georgia Uniform Commercial Code; all remedies available under that code are applicable to this Contract. Contractor and the Owner fix jurisdiction and venue for any action brought with respect to this Contract in Augusta, Georgia.

16.19 **Legal Construction**

If any provision contained in this Contract is held to be invalid, illegal or unenforceable, that invalidity, illegality or unenforceability will not affect any other provision of this Contract and this Contract will be construed as if the invalid, illegal or unenforceable provision had never been contained in this Contract.

16.20 **Prior Contracts Superseded**

This Contract and the attachments constitute the sole and only agreement between Contractor and Owner with respect to the subject matter of this Contract and supersede any prior understandings or written or oral contracts respecting the subject matter of this Contract.

16.21 **Counterparts**

This Contract may be executed concurrently in one or more counterparts, each of which will be deemed an original, but all of which will together constitute one (1) Contract.

16.22 **Further Acts**

Owner and Contractor each agrees to perform any additional acts and execute and deliver any additional documents as may reasonably be necessary in order to carry out the provisions and affect the intent of this Contract.

IN WITNESS WHEREOF, the parties hereto have caused this Contract to be executed by their appropriate officials, as of the date first written above.

[SIGNATURES ON THE FOLLOWING PAGE]

AUGUSTA, GEORGIA

_____
Garnett L. Johnson, Mayor

Attest: _____
Lena J. Bonner, Clerk of Commission

AUGUSTA AVIATION COMMISSION

_____
James Germany, Aviation Commission Chair

Attest: _____
Dereena Harris, Clerk of Augusta Aviation Commission

CONTRACTOR

_____

Sworn to and subscribed before me

this ____ day of _____, 202_.

_____

Notary Public

My commission expires: _____

(NOTARIAL SEAL)

Invitation to Re-Bid

Sealed re-bids will be received at this office until **Wednesday, October 5, 2022 @ 3:00 p.m.** via ZOOM **Meeting ID: 810 3210-6205 Passcode: 150814** for furnishing:

Re-Bid Item #22-244A AGS Fuel Farm Improvements for Augusta, GA – Augusta Regional Airport

Re-Bids will be received by Augusta, GA Commission hereinafter referred to as the OWNER at the offices of:

Geri A. Sams, Director
Augusta Procurement Department
535 Telfair Street - Room 605
Augusta, Georgia 30901

Re-Bid documents may be examined at the office of the Augusta, GA Procurement Department, 535 Telfair Street – Room 605, Augusta, GA 30901 (706-821-2422). Plans and specifications for the project shall be obtained by all prime contractors, subcontractors, and suppliers exclusively from ARC Southern. **The fees for the plans and specifications which are non-refundable are $360.00.**

It is the wish of the Owner that all businesses are given the opportunity to submit on this project. To facilitate this policy the Owner is providing the opportunity to view plans online (www.e-arc.com) at no charge through **ARC Southern (706 821-0405)** beginning **Thursday, August 25, 2022.** Bidders are cautioned that submitting a package without Procurement of a complete set are likely to overlook issues of construction phasing, delivery of goods or services, or coordination with other work that is material to the successful completion of the project. Bidders are cautioned that acquisition of documents through any other source is not advisable. Acquisition of documents from unauthorized sources places the bidder at the risk of receiving incomplete or inaccurate information upon which to base his qualifications.

Pre-Bid Conference will be held on Monday, September 19, 2022 @ 10:00 a.m. Via Zoom – Meeting ID: 858 6084 1906; Passcode: 923646. Optional Site Visit will be held on Tuesday, September 20, 2022 @ 10:00 a.m.

All questions must be submitted in writing by fax to 706 821-2811 or by email to procbidandcontract@augustaga.gov to the office of the Procurement Department by Wednesday, September 21, 2022 @ 5:00 P.M. No bid will be accepted by fax or email, all must be received by mail or hand delivered.

No proposal may be withdrawn for a period of ninety **(90)** days after BIDs have been opened, pending the execution of contract with the successful vendor. **A 10% Bid Bond is required. A 100% performance bond and a 100% payment bond will be required for award.**

Invitation for bids and specifications. An invitation for bids shall be issued by the Procurement Office and shall include specifications prepared in accordance with Article 4 (Product Specifications), and all contractual terms and conditions, applicable to the procurement. **All specific requirements contained in the invitation to bid including, but not limited to, the number of copies needed, the timing of the submission, the required financial data, and any other requirements designated by the Procurement Department are considered material conditions of the bid which are not waiveable or modifiable by the Procurement Director.** All requests to waive or modify any such material condition shall be submitted through the Procurement Director to the appropriate committee of the Augusta, Georgia Commission for approval by the Augusta, Georgia Commission. Please mark BID number on the outside of the envelope.

GEORGIA E-Verify and Public Contracts: The Georgia E-Verify law requires contractors and all sub-contractors on Georgia public contract (contracts with a government agency) for the physical performance of services over $2,499 in value to enroll in E-Verify, **regardless of the number of employees**. They may be exempt from this requirement if they have no employees and do not plan to hire employees for the purpose of completing any part of the public contract. Certain professions are also exempt. All requests for proposals issued by a city must include the contractor affidavit as part of the requirement for their bid to be considered.

Bidders are cautioned that acquisition of BID documents through any source other than the office of the Procurement Department is not advisable. Acquisition of BID documents from unauthorized sources placed the bidder at the risk of receiving incomplete or inaccurate information upon which to base his qualifications.

Correspondence must be submitted via mail, fax or email as follows:

Augusta Procurement Department
Attn: Geri A. Sams, Director of Procurement
535 Telfair Street, Room 605
Augusta, GA 30901
Fax: 706-821-2811 or Email: procbidandcontract@augustaga.gov

No bid will be accepted by fax or email, all must be received by mail or hand delivered.

GERI A. SAMS, Procurement Director

Publish:

Augusta Chronicle	August 25, 2022 and September 1, 8, 15, 2022
Metro Courier	August 25, 2022

Revised: 2/19/2016

RE-BID Opening - RE-BID Item #22-244A
AGS Fuel Farm Improvements
for Augusta, GA –Augusta Regional Airport
Date: Thursday, October 20, 2022 @ 3:00 p.m. via ZOOM

Total Number Specifications Mailed Out: 3
Total Number Specifications Download (Demandstar): 7
Total Electronic Notifications (Demandstar): 232
Georgia Procurement Registry: 2213
Total packages submitted: 2
Total Noncompliant: 0

VENDORS	Attachment "B"	Addendums 1-2	E-Verify Number	SAVE Form	Bid Bond	Base Bid	Bid Alternate 1	Bid Alternate 2	Total	Compliance 4% Goal
R. W. Allen 1015 Broad Street Augusta, GA 30901	Yes	Yes	1188595	Yes	Yes	$2,898,895.00	$401,504.00	$216,554.00	$3,516,953.00	Yes
Contract Management, Inc. 1829 Kinngworth Road Augusta, Ga 30904	Yes	Yes	225306	Yes	Yes	$4,220,383.00	$997,924.00	$254,591.00	$5,472,898.00	Yes

Augusta
GEORGIA

Compliance Department

Phyllis Johnson
Compliance Director

MEMORANDUM

To: Herbert Judon Jr., Executive Director, Augusta Regional Airport
Geri Sams, Director, Procurement Department

From: Phyllis Johnson, Director, Compliance Department Phyllis

Date: October 24, 2022

Subject: Bid Item # 22-244A – AGS Fuel Farm Improvement for ARA Project

☑ This Bidder/Offeror **IS** eligible for award. ☐ This Bidder/Offeror **IS NOT** eligible for award.

This memo is to transmit the review and concurrence of responsiveness and compliance by the bidder/offeror, **RW Allen Construction, LLC** Augusta, Georgia code requires contractor(s) to meet the assigned LSBOP Utilization Goal or provide evidence of completing good faith efforts on state and local funded projects.

The goal established for Bid Item # 22-244A – AGS Fuel Farm Improvement for ARA Project for Augusta, Georgia, is **4%. The bidder/offeror has committed to a minimum of 16.93% and did submit the required forms and is responsive and has satisfied good faith efforts.**

The bidder/offeror is eligible for award.

Should this bidder/offeror be selected for this bid, upon award, the Compliance Department will monitor the Contractor on a monthly basis to ensure that they meet or exceed their committed goal for this project.

Should you have questions, please contact me at (706) 826-1325.

COMPLIANCE DEPARTMENT
535 Telfair Street Suite 530 Augusta, GA 30901
(706) 821-2406 Fax (706) 821-4228
WWW.AUGUSTAGA.GOV

Augusta
GEORGIA

Compliance Department

Phyllis Johnson
Compliance Director

MEMORANDUM

To: Herbert Judon Jr., Executive Director, Augusta Regional Airport
Geri Sams, Director, Procurement Department

From: Phyllis Johnson, Director, Compliance Department Phyllis

Date: October 24, 2022

Subject: Bid Item # 22-244A – AGS Fuel Farm Improvement for ARA Project

☑ This Bidder/Offeror **IS** eligible for award. ☐ This Bidder/Offeror **IS NOT** eligible for award.

This memo is to transmit the review and concurrence of responsiveness and compliance by the bidder/offeror, **PROQUA Corporation** Augusta, Georgia code requires contractor(s) to meet the assigned LSBOP Utilization Goal or provide evidence of completing good faith efforts on state and local funded projects.

The goal established for Bid Item # 22-244A – AGS Fuel Farm Improvement for ARA Project for Augusta, Georgia, is **4%**. **The bidder/offeror has committed to a minimum of 4% and did submit the required forms and is responsive and has satisfied good faith efforts.**

The bidder/offeror is eligible for award.

Should this bidder/offeror be selected for this bid, upon award, the Compliance Department will monitor the Contractor on a monthly basis to ensure that they meet or exceed their committed goal for this project.

Should you have questions, please contact me at (706) 826-1325.

COMPLIANCE DEPARTMENT
535 Telfair Street Suite 530 Augusta, GA 30901
(706) 821-2406 Fax (706) 821-4228
WWW.AUGUSTAGA.GOV

Augusta Regional Airport

(706) 798-3236 • Fax: (706) 798-1551 • 1501 Aviation Way • Augusta, Georgia 30906 • www.flyags.com

OK
per
Geri Sams
phone conversation

Date: November 21, 2022

To: Geri Sams, Procurement Director
Augusta Procurement Department

From: Herbert L. Judon Jr., Airport Executive Director NLJ

RE: Award Recommendation – #22-244A –RW ALLEN CONSTRUCTION, LLC

I am requesting Bid #22-244A, for the AGS Fuel Farm Rehabilitation – Jet A Tanks, for Augusta Regional Airport, be awarded to the apparent lowest bidder RW Allen Construction, LLC., who adequately fulfilled all of the bid requirements. RW Allen's base bid was $2,989,895.

If you have additional questions, please contact me at (706) 796-4040 or via email at hjudon@augustaga.gov.

Augusta Regional Airport
(706) 798-3236 • Fax: (706) 798-1551 • 1501 Aviation Way • Augusta, Georgia 30906 • www.flyags.com

Geri Sams, Director
Augusta, Georgia Procurement Department
535 Telfair Street, Suite 605
Augusta, Georgia 30901

RE: Fuel Farm Rehabilitation Bid #22-244A

Dear Ms. Sams,

Please accept this attached justification letter from Mead & Hunt on behalf of Augusta Regional Airport regarding the Fuel Farm Rehabilitation Bid #22-244A. The qualifying low bid has come in over budget but it is our position that there is justification to award this bid. The engineered estimate for this base bid was ($2,164,013) while the qualifying low bid was ($2,898,894). Due to volatile market conditions, the fact this is a rebid and the critical need for the rehabilitation to be completed by a compliance deadline, I respectfully request approval of this justification.

The airport has funding to cover the overage amount of the bid.

Should you have any questions, please do not hesitate to contact me.

Sincerely,

Herbert L. Judon Jr.

Herbert L. Judon, Jr.
Executive Director.

Mead & Hunt 29406

November 11, 2022

Mr. Herbert L. Judon, Jr. A.A.E., IAP
Executive Director
Augusta Regional Airport
1501 Aviation Way
Augusta, Georgia 30906

Subject: Fuel Farm Improvements

Dear Mr. Judon:

The Augusta Procurement Department has publicly Bid the Plans and Specifications for the proposed Fuel Farm Improvements project (IFB #22-244A). Bids were opened and read publicly on October 20, 2022, at 3:00 pm, local time at the Augusta Procurement Department.

Mead and Hunt, Inc. has reviewed the response to the advertisement for bids for the project. Bids were received from R.W. Allen headquartered in Augusta, GA, and Contract Management Inc. headquartered in Augusta, GA. At the request of Augusta Regional Airport and the Aviation Commission, Mead & Hunt provided a list of potential Contractors to Procurement and reached out to multiple contractors to inform them of the project in order to hopefully increase interest.

All bids received must be reviewed as a whole by the Augusta Procurement Department and compared to the Engineer's estimate. In the event that the apparent responsive and responsible low bid contractor is compliant yet exceeds the engineer's estimate, justification must be provided by the Consultant to the Augusta Regional Airport and the Augusta Procurement Department prior to recommending award to the apparent low-bid contractor.

The total bid submitted by R.W Allen ($3,516,953), was approximately $1,135,000 higher than Engineer's estimate ($2,381,983). The individual bid alternates were as follows: contractor's base bid ($2,898,894) compared to the Engineers estimate ($2,164,013); contractor's bid alternate 1 ($401,505) compared to the Engineer's estimate ($167,969); and contractor's bid alternate 2 ($216,554) compared to the Engineer's estimate ($50,000). The difference between these costs can be attributed to multiple issues. Within the A/E industry, construction prices are reaching an unprecedented level due to oil/gas prices which affect multiple facets of construction, supply chain issues, labor shortages, etc. To address these concerns, Contractor's must try to account for unknown issues within a climate of uncertainty. Specifically with this bid and similar projects in the region, any project task that has hauling/trucking associated with it is coming in more than 25% of the estimate along with any asphalt product or steel (piping). Additionally, this is a much more complicated and intricate project than most contractors are used to bidding therefore

introducing additional unknown and unforeseen costs. After reviewing and evaluating the unit prices associated with the various construction line items, the costs associated seem to fall within the current market averages seen across the country and specifically within the region for similar projects.

In speaking with Airport staff following the bid opening, a discussion was held regarding the options at hand. The current bid could be canceled and re-bid for a second time, or the project's base bid could be awarded with the remaining phases being bid at a separate time. This project was programmed to be funded via the general airport funding. Because of the potential that a rebid of the project would result in project delays and that a rebid would not necessarily provide lower costs with the instability of the existing market, the Airport would like to move forward with the award of only the base bid. A separate Recommendation of Award will be made to Augusta Regional Airport by Mead & Hunt following this Justification.

Should you have any questions, please feel free to contact us.

Sincerely,

MEAD & HUNT, INC.

Edwin J Scott, Jr., P.E.
Project Manager

cc:

Darrell White, City of Augusta Procurement
Nancy Williams, City of Augusta Procurement
Tim Weegar, Augusta Regional Airport
Elizabeth Giles, Augusta Regional Airport

JOB NAME 22-244

CONTRACTOR	CONTACT	EMAIL	PHONE #	DIGITAL	PRINTED
CONSTRUCT CONNECT	HENRI BRADSHAW	HENRI.BRADSHAW@CONSTRUCTCONNECT.COM		Y	N
RD Brown Contractors	Bryce Howie	bhowie@browntrusted.com	706-799-0031	Y	Y
RW ALLEN	MATTHEW PULLIAM	MPULLIAM@RWALLEN.COM	706-733-2800	Y	N
CONTRACT MANAGEMENT	GREG WILLIAMS	gregoryw@contractmtinc.com	706-667-6363	N	Y

MODERN WELDING COMPANY OF GEORGIA, INC.
300 PREP PHILLIPS DRIVE
AUGUSTA, GA 30901

HIGHLAND TANK & MANUFACTURING COMPANY, INC.
ONE HIGHLAND ROAD
STOYSTOWN, PA 15563

SOUTHERN TANK
1501 HAYNES AVENUE
OWENSBORO, KY 42303

INC DBA ENVIROSAFE
1789 EC 48
BUSHNELL, FL 33513

KEAR EAST COAST OFFICE
18 COMMERCE DRIVE
DANBURY, CT 06810

EAGLE TANKS
9055 PORTER WAY
AUMSBILLE, OR 97325

TURNER TANKS
1502 HWY. 1175
GOLDSBORO, NC 27530

GARASITE
539 SOUTH 10TH STREET
KANSAS CITY, KS 66105

CEI
1931 N.W. 150TH AVE #104,
PEMBROKE PINES, FL 33028
RETURNED MAIL

CEI
12981 NW 113TH CT
MEDLEY, FL 33178

FUEL TECH INC
2680 US HWY 1
MIMS, FL 32754

ALLIED AVIATION SERVICES
266 WEST 37TH STREET
3RD FLOOR, SUITE 302
NEW YORK, NY 10018

CORRIGAN COMPANY
3545 GRATIOT STREET
ST. LOUIS, MO 63103

UNITY FUEL SOLUTIONS
11111 KATY FREEWAY
SUITE 910
HOUSTON, TX 77079

MASCOTT EQUIPMENT
435 NE HANCOCK ST
PORTLAND, OR 97212

R. W. Allen
1015 Broad Street
Augusta, GA 30901

R.D BROWN CONSTRUCTION
410 CAROLINA SPRINGS ROAD
NORTH AUGUSTA, SC 29841

CONTRACT MANAGEMENT
1829 KILLINGSWORTH ROAD
AUGUSTA, GA 30904

ALLEN BATCHELOR CONSTRUCTION
1063 FRANKE INDUSTRIAL BLVD
AUGUSTA, GA 30909

RCN CONSTRUCTION
1115 FRANKE INDUSTRIAL BLVD.
AUGUSTA, GA 30909

KUHLKE CONSTRUCTION
3704 BENCHMARK DR.
AUGUSTA, GA 30909

TWO STATE CONSTRUCTION COMPANY
2292 WASHINGTON ROAD
THOMSON, GA 30824

BLOUNT'S COMPLETE HOME
2907 TOBACCO ROAD #C
HEPHZIBAH, GA 30815

PROQUA CORPORATION
1827 KILLINGSWORTH ROAD
AUGUSTA, GA 30904

LARRY PITTMAN AND ASSOCIATES
1249 GORDON PARK RD
AUGUSTA, GA 30901

SOMMERS CONSTRUCTION COMPANY
632 SOUTH OLD BELAIR ROAD
GROVETOWN, GA 30813
RETURNED MAIL

LARRY MCCORD DESIGN BUILD
2016 HIGHLAND AVE
AUGUSTA, GA 30904

BID ITEM #22-244A
AGS FUEL FARM IMPROVEMENTS FOR AUGUSTA, GA – AUGUSTA REGIONAL AIRPORT
DUE: WED., OCT 5, 2022 @ 3:00 P.M.

BID ITEM #22-244A
AGS FUEL FARM IMPROVEMENTS FOR AUGUSTA, GA – AUGUSTA REGIONAL AIRPORT
MAIL: 08/25/2022

Pg 1 of 2

J&B CONSTRUCTION & SRVC INC
3550 GORDON HIGHWAY
GROVETOWN GA 30813

ATTN: LOUIE A. PITTMAN, III
PITTMAN CONSTRUCTION CO
P. O. BOX 155
CONYERS, GA 30012-0155

HORIZON CONSTRUCTION
PO BOX 798
EVANS, GA 30809

CONTINENTAL CONSTRUCTION
4190 CROSSTOWNE COURT
EVANS, GA 30809

HEAVENER & ASSOCIATES CONSTRUCTION
P.O. BOX 14129
AUGUSTA, GA 30919

ACC CONSTRUCTION CO
635 NORTHWEST FRONTAGE
AUGUSTA, GA 30907

AKINS GENERAL CONTRACTORS
PO BOX 941
520 PARK AVENUE
STATESBORO, GA 30458

B.R. WALDEN CONSTRUCTION
2320 WALDEN DRIVE
AUGUSTA, GEORGIA 30904

TWENTIETH CENTURY CONSTRUCTION
2106 KELLY STREET
AUGUSTA, GEORGIA 30904

ROBERTSON RESTORATION
960 HICKMAN ROAD
AUGUSTA, GA 30904

PEACH CONTRACTING
3127 DAMASCUS ROAD
AUGUSTA, GA 30909

TFJ CONSTRUCTION INC
692 WOODWARD LAKE RD
TRENTON, SC 29847

J. E. STEWART BUILDERS, INC
237 CHESTERFIELD STREET
N. AIKEN, SC 29801

S. D. CLIFTON CONSTRUCTION
4324 WHEELER ROAD
AUGUSTA, GA 30907

DABBS-WILLIAMS GC
ATTN JAY JAMES
319 S WALNUT STREET
STATESBORO GA 30459

CONSTRUCTCONNECT
3825 EDWARDS ROAD SUITE 800
CINCINNATI, OH 45209

DIVERSIFIED CONSTRUCTION OF GA INC.OF GA INC.
2104 VISTADALE CT
TUCKER, GA 30084

HERBERT JUDON
AUGUSTA REGIONAL AIRPORT

RISA BINGHAM
AUGUSTA REGIONAL AIRPORT

PHYLLIS JOHNSON
COMPLIANCE

TIM WEEGAR
AUGUSTA REGIONAL AIRPORT

BID ITEM #22-244A
AGS FUEL FARM IMPROVEMENTS FOR AUGUSTA, GA – AUGUSTA REGIONAL AIRPORT
DUE: WED., OCT 5, 2022 @ 3:00 P.M.

BID ITEM #22-244A
AGS FUEL FARM IMPROVEMENTS FOR AUGUSTA, GA – AUGUSTA REGIONAL AIRPORT
MAIL: 08/25/2022

parteevanessa 2022-08-26	essapartee@yahoo.com partee, vanessa	N	NOM
parteevanessa 2022-08-26	vanessapartee@yahoo.com partee, vanessa	N	NOM
rand construction corporation 2022-08-26	agriffin@randcc.com Griffin, Anna	N	NOM
reams enterprises inc 2022-08-26	ahamilton@reamsenterprises.com Hamilton, Alfred	N	NOM
republic diesel 2022-08-26	chris.redden@republicdiesel.com redden, chris	N	NOM
rohadfox Construction Control Services C 2022-08-26	debra.james@rccsc.net James, Debra	Y	AFA
rohadfox Construction Control Services C 2022-08-26	rccsc@rccsc.net Rohadfox, Rebekah J.		
sinc electrical 2022-08-26	lee@sincelectrical.com knight, lee	N	NOM
sinc electrical 2022-08-26	scott@sincelectrica.com key, Joey		
space managementcapi 2022-08-26	dnemec@spaceplan.gatech.edu space management, capital planning	N	NOM
synergy consultants 2022-08-26	gadobson@synergyconsultants.biz Dobson, George	N	NOM

ETHNIC GROUP	COUNT
African American	296
Asian American	29
Native American	12
Hispanic/Latino	22
Pacific Island/American	2
Non Minority	949
Not Classified	0
Total Number of Vendors	1310
Total Number of Contacts	2213

PR_bid_email_list

Planholders

Add Supplier | Export To Excel

Supplier (6)

Supplier	Download Date
American Compliance Technologies, Inc.	08/26/2022
D&S Steel Inc	08/26/2022
Dodge Data	08/27/2022
Gracon LLC	08/26/2022
Guardian Fueling Technologies	09/16/2022
Muns Services, LLC	08/29/2022

Add Supplier

Supplier Details

Supplier Name	American Compliance Technologies, Inc.
Contact Name	Kristin Lawrence
Address	1875 West Main Street , Bartow, FL 33830
Email	estimating@a-c-t.com
Phone Number	863-533-2000
Self Declarations	Small Business

Documents

Filename	Type	Action
22-244A_ITB	Bid Document / Specifications	View History
22-244A_ADD1	Addendum	View History
22-244A_ADD2	Addendum	View History

Commission Meeting

March 7, 2023

HCD Request to Approve Augusta, Georgia's Submission of HUD's HOME ARP Cost Allocation Plan

---

Department: Housing and Community Development

Presenter: Hawthorne E. Welcher, Jr., Director, and/or Staff

Caption: Motion to approve Augusta, Georgia's submission to HUD of the HOME Investment Partnership Program– American Rescue Plan Cost Allocation Plan and request the following:

Authority for the Mayor to execute 1) Standard Form 424, 2) Standard Form 424 D, and 3) Certifications and Assurances required by HUD for HOME ARP funds;

Allow HCD to move forward with implementation of Cost Allocation Plan activities;

Allow HCD to hire one (1) additional FT staff person (concurrent with the term of grant)/provide supplemental pay (where applicable) for all affected employees;

Instruct Finance department to add available funding to HCD's budget for immediate use and implementation. **(Approved by Administrative Services Committee February 28, 2023)**

Background: The American Rescue Plan Act of 2021, Section 3025, appropriated $5 billion to provide housing, services, and shelter to individuals experiencing homeless and other vulnerable populations, under Title II of the Cranston-Gonzalez National Affordable Housing Act (42 U.S.C. 12701 et seq.) ("NAHA") for the HOME Investment Partnerships Program. The Act designated these funds to be allocated by formula to jurisdictions that qualified for HOME Investment Partnerships Program allocations in Fiscal Year 2021.

The United States Department of Housing and Urban Development (HUD) issued regulatory guidance on HOME Investment Partnership – American Rescue Plan cost allocation plan requirements for funds appropriated under section 3205 of the American Rescue Plan Act of 2021 (P.L. 117-2) ("ARP") to provide homelessness assistance and supportive services. The program

established for the use of ARP funds is the HOME-American Rescue Pl
"HOME-ARP" program. The revised HOME-ARP allocation plan requirements include establishing a final deadline of March 31, 2023 for the submission of all HOME-ARP allocation plans.

The Augusta Commission approved receipt of HOME ARP funds in the amount of $3,483,201 at the March 30, 2022 Commission Meeting. Subsequently, HUD published Notice CPD-21-10 entitled, "Requirements for the Use of Funds in the HOME-American Rescue Plan Program," (the "HOME-ARP Notice") which establishes the requirements for the use of HOME-ARP funds, including the requirement that each recipient of HOME ARP funds submit to HUD a "HOME ARP Cost Allocation Plan" outlining the intended uses of the funds to address housing instability in the local community. This agenda item represents Augusta's HOME ARP Cost Allocation Plan to move forward with the construction and rehabilitation of residential dwelling units for the purpose of providing decent, safe and sanitary permanent housing options for residents experiencing, or at-risk of experiencing, homelessness, as defined by Federal statute.
With the growing need for more affordable housing across the local community, Augusta is proposing, through HCD, to utilize these grant funds to construct affordable residential dwelling units to be occupied by persons experiencing or at-risk of experiencing homelessness in Augusta, Georgia. Augusta's Cost Allocation Plan proposes advancing these efforts through a combination of new construction and rehabilitation of existing units to maximize impact and unit diversity in meeting the needs of the local citizenry for affordable housing options for single adults and families experiencing chronic homelessness and other barriers to housing stability.

Analysis:

If approved by the Augusta, Georgia Commission, the submission of Augusta's HOME ARP Cost Allocation Plan will allow HCD to move forward with the development of residential dwelling units occupied by low-income households that are experiencing, or have recently experienced, homelessness in Augusta, Georgia (annual household income restrictions apply, as determined by HUD).

Financial Impact:

HOME ARP Program Grant funding from HUD requires no Matching Funds and the full allocation is dedicated to the project and administrative costs outlined in the plan.

Alternatives:

Do not approve Augusta, Georgia's submission of HUD's HOME ARP Cost Allocation Plan and forfeit $3,483,201 in funding to support the development of affordable permanent housing for residents facing homelessness.

Recommendation:

Approve Augusta, Georgia's submission to HUD of the HOME Inves Partnership Program– American Rescue Plan Cost Allocation Plan and request approval for the following:

a) Authority for the Mayor to execute 1) Standard Form 424, 2) Standard Form 424 D, and 3) Certifications and Assurances required by HUD for HOME ARP funds;
b) Allow HCD to move forward with implementation of Cost Allocation Plan activities;
c) Allow HCD to hire one (1) additional FT staff persons (concurrent with the term of grant)/provide supplemental pay (where applicable) for all affected employees;
d) Instruct Finance department to add available funding to HCD's budget for immediate use and implementation.

Funds are available in the following accounts:

The HUD HOME ARP Program Grant Agreement represents an allocation of $3,483,201 to Augusta, Georgia.
New grant proposal/application has been submitted to Finance.

REVIEWED AND APPROVED BY:

Procurement

Finance

Law

Administrator

Clerk of Commission

U.S. Department of Housing and Urban Development
Atlanta Office
Community Planning and Development
Five Points Plaza
40 Marietta Street, NW, 15th Floor
Atlanta, GA 30303-2806

September 22, 2021

Mr. Odie Donald, II
Administrator
City of Augusta
535 Telfair St. Suite 910
Augusta, GA 30901

Dear Mr. Donald:

The American Rescue Plan Act of 2021 appropriated $5 billion to provide housing, services, and shelter to individuals experiencing homeless and other vulnerable populations, to be allocated by formula to jurisdictions that qualified for HOME Investment Partnerships Program allocations in Fiscal Year 2021. On September 13, 2021, the Department published a notice, titled: *Requirements for the Use of Funds in the HOME-American Rescue Plan Program* (the Notice), which you are encouraged to review to assist in developing your program. Enclosed is the Grant Agreement for the HOME Investment Partnerships – America Rescue Plan (HOME-ARP) program:

In accordance with the Notice, and the HOME ARP Grant Agreement, a Participating Jurisdiction (PJ), as of the Federal Award Date, may use up to five percent of its total award for administrative and planning costs. Once your HOME-ARP Allocation Plan is approved by HUD, the remaining award will be made available.

HOME Investment Partnerships - American Rescue Plan (HOME-ARP) $3,483,201

Transmittal of this Grant Agreement does not constitute approval of the activities described in your HOME-ARP Allocation Plan. You are reminded that you, as the PJ, are responsible for ensuring that all grant funds are used in accordance with all program requirements. An executed Grant Agreement is a legally binding agreement between the Department of Housing and Urban Development and the City of Augusta.

To establish a Line of Credit for the HOME-ARP award, it will be necessary for your agency to sign, execute and return one (1) copy of the Grant Agreement. If there is a need to add or remove individuals authorized to access the Integrated Disbursement Information System (IDIS), please submit an IDIS Online Access Request Form (HUD 27055). Also, please ensure the IDIS Online Access Request Form is notarized and returned to this office with your Grant Agreement. Additionally, if there is a need to establish or change the depository account where these funds are to be wired, a Direct Deposit Sign-Up form (SF-1199A) must be completed by your financial institution and returned to this office with a copy of a voided check.

You are reminded that certain activities are subject to the provisions of 24 CFR Part 58 (**Environmental Review Procedures**). Funds for such activities may not be obligated or expended until HUD has approved the release of funds in writing. A request for release of funds (RROF) must be accompanied by an environmental certification, and until the RROF is approved and notification is received, no HUD funds should be committed. If the project or activity is exempt per 24 CFR 58.34 or categorically excluded (except in extraordinary circumstances), no RROF is required.

Please execute two (2) copies of the HOME-ARP Grant Agreement with electronic signatures. In response to COVID-19, HUD authorizes you to electronically execute the grant agreement with your electronic signature. Return one (1) of the agreements to this office to the attention of CPD Director Adrian Fields at Adrian.M.Fields@hud.gov. Maintain a copy of the agreement with your original signature on site in your program files.

HUD congratulates the City of Augusta on its grant award, and we look forward to assisting you in accomplishing your programs goals. If you have any questions or need further information of assistance, please contact Mr. Basil Beckford, Senior Community Planning and Development Representative at 678-732-2945, or basil.h.beckford@HUD.gov.

Sincerely,

Adrian M. Fields

Adrian M. Fields
Director
Atlanta Office of Community Planning
and Development

Enclosures

cc: Hawthorne Welcher

Augusta
GEORGIA

Office of the City Administrator

Takiyah A. Douse
Interim City Administrator

March 30, 2022

Mr. Hawthorne Welcher
Housing Community & Development Director
510 Fenwick Street
Augusta, GA 30901

Dear Director Welcher:

At the regular meeting held Wednesday, March 30, 2022, The Augusta, Georgia Commission took action on the following:

Addendum #1: Received as information and offer support for the Strategic Plan recommendations from the Homeless Task Force and task Housing and Community Development to move forward with developing recommendations for Commission action related to the Homeless Crisis Response System Coordinator position and HOME-ARP Award Cost Allocation Plan in line with Task Force recommendation for investment in development of Permanent Supportive Housing Units.

22. Approved Augusta-Richmond County's 2021-2026 Language Access Plan (LAP) for the 2021 CDBG-CV project for the Golden Harvest Food Bank.

23. Approved Housing and Community Development Department's (HCD's) request to engage Frye Environmental, LLC to provide training relative to 24 CFR Part 58 Environmental Review process in support of HUD-funded program requirements.

24. Approved Housing and Community Development Department's (HCD's) request to provide Laney Walker/Bethlehem Revitalization Project Funding to contract with Capitalrise, LLC for the new construction of two (2) single family units, identified as 1467 and 1469 Brown Street, within Laney Walker/Bethlehem.

25. Approved HCD's request for 50/50 partnership with VIP, Inc. to identify/develop up to three lots for single-family housing, new construction within the Laney Walker/Bethlehem area.

If you have any questions, please contact me.

In Service,

Takiyah A. Douse
Interim City Administrator

Augusta, Georgia HOME-ARP Allocation Plan
Housing Production Goal Calculation Worksheet

HOME-ARP Housing Production Goal Calculation Worksheet

HCD utilized this worksheet to estimate the number of affordable rental housing units for qualifying populations that Augusta, Georgia will produce or support with its HOME-ARP allocation.

NOTE: This worksheet provides two columns to calculate the number of HOME-ARP units that will be created with Augusta's two rental housing projects, the first column represents New Construction Units. The second column represents Units developed through the Rehabilitation of Existing housing stock.

	HOME-ARP Rental Housing Project (#1) - New Construction	HOME-ARP Rental Housing Project (#2) - Rehabilitation of Existing Units
Housing characteristics required by the qualifying populations		
Average household size	1	3
Unit size needed (number of bedrooms)	1	3
Amenities		
HOME-ARP Funding		
Total amount of HOME-ARP funding allocated to jurisdiction	$ 3,483,201.00	$ 3,483,201.00
Amount of HOME-ARP expected to be used for admin, NFP operating and capacity building	$ 522,480.00	$ 522,480.00
Amount of HOME-ARP available for HOME-ARP eligible activities	**$ 2,960,721.00**	**$ 835,721.00**
Estimated amount for ongoing operating costs or operating cost assistance reserve	$ 25,000.00	$ 25,000.00
Amount of HOME-ARP available for rental housing development	**$ 2,935,721.00**	**$ 810,721.00**
Estimated amount from other housing development funding sources		
Total amount available for rental housing development	$ 2,100,000.00	$ 810,721.00
Average per unit development cost for qualifying population	$ 123,529.41	$ 100,000.00
Estimated HOME-ARP Housing Production Goal	**17**	**8**
Total for all HOME ARP Activities	**$**	**3,483,201.00**

HOME – American Rescue Plan Funding Affordable Rental Housing Development for Qualifying Populations

1. HOME ARP Allocation Plan
2. HOME ARP Housing Production Goals Worksheet
3. Augusta, Georgia HOME-ARP SF424, SF424B and related Certifications

Table of Contents

Augusta, Georgia HOME-ARP Allocation Plan

All guidance referenced in this plan, including questions and tables, reflect requirements for the HOME-ARP allocation plan, as described in HUD CPD Notice CPD-21-10: Requirements of the Use of Funds in the HOME-American Rescue Plan Program.

References to "the ARP" mean the HOME-ARP statute at section 3205 of the American Rescue Plan Act of 2021 (P.L. 117-2).

Executive Summary

The City of Augusta has been allocated $3,483,201 of HOME-American Rescue Plan Act (HOME-ARP funding from the US Department of Housing and Urban Development (HUD). In order to receive the HOME-ARP allocation, the City must develop a HOME-ARP Allocation Plan that will become part of the City's FY2021 HUD Annual Action Plan by substantial amendment.
To ensure broad input into the HOME-ARP Allocation Plan from stakeholders and the public, the City engaged in consultation with stakeholders and the public, including a virtual consultation session, a survey of stakeholders, a 15-day public comment period, and a public hearing.

The needs assessment and gap analysis identified the following needs and gaps within the City:

- In January 2022, the annual Point in Time (PIT) count revealed that 298 people were residing in emergency housing, either in shelter or transitional housing. Another 278 people were unsheltered on the streets, in tents or makeshift shelters, or in cars, vans, RVs or campers.
- The most recent CHAS Data from HUD reported over 25% of households with incomes at or below 30% AMI are at risk of homelessness in the City.
- The most recent HUD CHAS data indicates there are 7,585 renter households with an annual income at or below 30% AMI with a cost burden that are at greatest risk of housing instability.
- The CHAS data reports that there are 4,940 households with incomes more than 30 and but equal to or less than 50% AMI that are at risk of homelessness in the City because of at least one of the housing problems as defined by HUD.
- The greatest need for supportive services is in the areas of were mental health services, landlord/tenant liaison, housing search/counseling services, childcare assistance and financial assistance.

To address these needs within the community, the City will utilize HOME-ARP funds for developing affordable rental housing units and administration and planning for the HOME-ARP program.

The City will solicit applications from developers, service providers, and/or nonprofits to administer eligible activities and/or develop housing. A Request for Proposals (RFP) will be issued. The RFP will, at a minimum, specify eligible activities, eligible applicants, minimum and maximum funding amounts, application thresholds, and will provide instructions on how to submit a proposal.

Introduction

The City of Augusta has been allocated $3,483,201 of HOME-American Rescue Plan Act (HOME-ARP) funding from the US Department of Housing and Urban Development (HUD). To receive the HOME-ARP allocation the City of Augusta must develop a HOME-ARP Allocation Plan that will become a part of the City's PY2021 HUD Annual Action Plan by substantial amendment.

The HOME-ARP Cost Allocation Plan includes the following:

1. A summary of the consultation process and the results of consultation;
2. A summary of comments received through the public participation process and a summary of any comments or recommendations not accepted and the reason why;
3. A description of HOME-ARP qualifying populations within the jurisdiction;
4. An assessment of unmet needs of each qualifying population;
5. An assessment of gaps in housing and shelter inventory, homeless assistance and services, and homelessness prevention service delivery system;
6. A summary of planned use of HOME-ARP funds for eligible activities based on the unmet needs of the qualifying populations;
7. An estimate of the number of housing units for qualifying populations the City will produce or preserve with its HOME-ARP allocation;
8. A description of any preferences for individuals and families in a particular qualifying population or a segment of a qualifying population;
9. HOME-ARP Refinancing Guidelines; and
10. Certifications and SF-424, SF-424B, and SF-424D Forms.

The following entities are responsible for preparing the Cost Allocation Plan and those responsible for administration of the HOME-ARP grant.

Table 1 – Responsible Agencies

Agency Role	Name	Department/Agency
HOME Administrator	City of Augusta	Housing and Community Development Department

HOME-ARP Eligible Qualifying Populations and Activities

HUD's CPD Notice 21-10 Requirements for the Use of Funds in the HOME-American Rescue Plan Program establishes the requirements for funds appropriated under section 3205 of the American Rescue Plan Act of 2021 for the HOME Investment Partnerships Program (HOME) to provide homelessness assistance and supportive services.

The American Rescue Plan Act (ARP) defines qualifying individuals or families, including Veterans, which are:

1. Homeless, as defined in section 103(a) of the McKinney-Vento Homeless Assistance Act;
2. At risk of homelessness, as defined in section 401 of the McKinney-Vento Homeless Assistance Act;
3. Fleeing or attempting to flee domestic violence, dating violence, sexual assault, or stalking (as defined by HUD in 24 CFR 5.2003) or human trafficking (as outlined in the Trafficking Victims Protection Act of 2000 as amended [22 USC 7102]); and
4. Part of other populations, where providing supportive services or assistance under section 212(a) of the National Affordable Housing Act 42 USC 12472(a) would:
    a. Prevent a family's homelessness;
    b. Serve those with the greatest risk of housing instability.

HOME-ARP funds may be used benefit qualifying populations through:

1. Tenant-based Rental Assistance (TBRA);
2. Development and support of affordable housing;
3. Provision of supportive services;
4. Acquisition and development of non-congregate shelter;
5. Nonprofit capacity building and operating assistance; and
6. Program Planning and Administration

Consultation

In accordance with Section V.A of the Notice (page 13), before developing its HOME-ARP allocation plan, at a minimum, a PJ must consult with:

- CoC(s) serving the jurisdiction's geographic area,
- homeless service providers,
- domestic violence service providers,
- veterans' groups,
- public housing agencies (PHAs),
- public agencies that address the needs of the qualifying populations, and
- Public or private organizations that address fair housing, civil rights, and the needs of persons with disabilities.

Stakeholder Consultation and Public Participation

HUD requires each HOME-ARP Participating Jurisdiction to consult with agencies and service providers whose clientele include the HOME-ARP qualifying populations. Agencies that must, at a minimum, be consulted include the Continuum of Care serving the jurisdiction's geographic area, homeless and domestic violence service providers, veterans' groups, public housing agencies (PHAs), public agencies that address fair housing, civil rights, and the needs or persons with disabilities.

HUD also requires that each Participating Jurisdiction provide opportunities for the public to comment on the proposed Allocation Plan, including the amount of HOME-ARP funds that will be received and the range of activities that the City may undertake.

To ensure broad input into the HOME-ARP Allocation Plan from stakeholders and the public, the City engaged in consultation with stakeholders and the public, including a virtual consultation session, a survey of stakeholders, a 15-day public comment period, and a public hearing.

Stakeholder Consultation

The City of Augusta consulted with the stakeholders listed in the following table in the development of the HOME ARP Cost Allocation Plan.

List the organizations consulted:

Agency/Org Consulted	Type of Agency/Org	Method of Consultation
Augusta Housing Authority	Public, addresses needs of qualifying populations, serves as public housing authority	Direct consultation Survey
Augusta Homeless Task Force (CoC)	Private collaborative, addresses needs of qualifying populations including the homeless	Direct consultation Survey
SAFEHOMES Domestic Violence Agency	Non-profit, addresses needs of qualifying populations including homeless	Direct consultation Survey
Salvation Army Augusta Area Command	Non-profit, addresses needs of qualifying populations, including homeless	Direct consultation Survey
CSRA Economic Opportunity Authority, Inc.	Non-profit, addresses needs of qualifying populations, including homeless	Direct consultation Survey

Summary of Feedback Received from Consulted Organizations

Consultation revealed strong support for the following:

Development and support of affordable housing. Participants in these engagements were united in the need for additional affordable housing, specifically permanent supportive housing. Those replying to the survey also all agreed the there was “high need” for this housing. There was discussion of various populations, represented by the agencies assembled, in need of both stable housing and services including case management.

Provision of supportive services. Many examples of supportive services were mentioned in the virtual session including case management, fair housing, mental health services, credit repair services, housing counseling, substance abuse services, and eviction defense. Survey respondents were asked to rank what they believed is the current need for various services eligible under HOME-ARP. The activities with the most rankings for “high need” were mental health services (88%), landlord/tenant liaison (86%), housing search/counseling services (78%), childcare assistance and financial assistance (75%).

Public Participation

In accordance with Section V.B of the Notice (page 13), PJs must provide for and encourage citizen participation in the development of the HOME-ARP allocation plan. Before submission of

the plan, PJs must provide residents with reasonable notice and an opportunity to comment on the proposed HOME-ARP allocation plan of no less than 15 calendar days. The PJ must follow its adopted requirements for "reasonable notice and an opportunity to comment" for plan amendments in its current citizen participation plan. In addition, PJs must hold at least one public hearing during the development of the HOME-ARP allocation plan and prior to submission.

PJs are required to make the following information available to the public:

- The amount of HOME-ARP the PJ will receive, and
- The range of activities the PJ may undertake.

Throughout the HOME-ARP allocation plan public participation process, the PJ must follow its applicable fair housing and civil rights requirements and procedures for effective communication, accessibility, and reasonable accommodation for persons with disabilities and providing meaningful access to participation by limited English proficient (LEP) residents that are in its current citizen participation plan as required by 24 CFR 91.105 and 91.115.

Describe the public participation process, including information about and the dates of the public comment period and public hearing(s) held during the development of the plan:

- ***Date(s) of public notice: 3/6/2023***
- ***Public comment period:*** *start date -* ***3/7/2023*** *end date –* ***3/22/2023***
- ***Date(s) of public hearing:3/23/2023***

Describe the public participation process:

To provide opportunities for public participation, the City of Augusta sent an email to all agencies and individuals on its email list notifying them of the opportunity to participate in the consultation session to be held on April 21, 2022 as part of Augusta's Homeless Task Force Meeting. In addition to attending the HTF consultation session, they were asked to complete an online survey regarding their views of the level of need for the eligible activities and qualifying populations as described by the CPD Notice 21-10. Those unable to attend, or who had further comments after the virtual session were invited to email them directly to City of Augusta staff.

Describe efforts to broaden public participation:

To broaden public participation, members of the public who are on HCD's email list were also invited via email to attend the HTF consultation session held in the formulation of the Allocation Plan.

Summarize the comments and recommendations received through the public participation process either in writing, or orally at a public hearing:

A summary of comments and recommendation received during the public comment period and at the public hearing will be included prior to the submission of this Allocation Plan to HUD.

Summarize any comments or recommendations not accepted and state the reasons why:

A summary of comments and recommendations received but not accepted and the reasons why will be included prior to the submission of this Allocation Plan to HUD.

Needs Assessment and Gaps Analysis

The needs assessment and gap analysis must evaluate the size and demographic composition of HOME-ARP qualifying populations, and unmet needs of HOME-ARP qualifying populations. In addition, the needs assessment and gap analysis must identify any gaps within its current shelter and housing inventory, and service delivery system.

This needs assessment and gap analysis focuses on the following:

1. Sheltered and unsheltered homeless populations;
2. Currently housed populations at risk of homelessness;
3. Other families requiring services or housing to prevent homelessness; and
4. Those at greatest risk of housing instability or unstable housing situations.

Housing Inventory Count

The annual Housing Inventory Count (HIC) provides useful context regarding the number and type of beds and units that are available for individuals and families experiencing on any given night. The following tables summarize beds and units available as of January 2022 in the City of Augusta by bed type.

Emergency housing beds include emergency shelter and transitional housing; emergency shelter generally allows for short-term or nightly stays, while transitional housing generally allows for a stay up to 24 months. Both types of emergency housing may include supportive services designed to facilitate movement to independent living.

DATA TO BE UPDATED WITH 2023 Point in Time PRIOR TO SUBMISSION

Rapid rehousing provides security and utility deposits and/or monthly rental and utility assistance for rental units that rent for less than the fair market rent. Assistance is generally provided for the shortest period of time necessary for a household to gain stable housing and can range from 3 to 24 months. Permanent supportive housing provides for an unlimited lease term; residents receive services necessary to promote continued housing stability.

DATA TO BE UPDATED WITH 2023 Point in Time PRIOR TO SUBMISSION

OPTIONAL Homeless Needs Inventory and Gap Analysis Table

Homeless													
	Current Inventory					Homeless Population				Gap Analysis			
	Family		Adults Only		Vets	Family HH (at least 1 child)	Adult HH (w/o child)	Vets	Victims of DV	Family		Adults Only	
	# of Beds	# of Units	# of Beds	# of Units	# of Beds					# of Beds	# of Units	# of Beds	# of Units
Emergency Shelter	#	#	#	#	#								
Transitional Housing	#	#	#	#	#								
Permanent Supportive Housing	#	#	#	#	#								
Other Permanent Housing	#	#	#	#	#								
Sheltered Homeless						#	#	#	#				
Unsheltered Homeless						#	#	#	#				

Current Gap										#	#	#	#

Suggested Data Sources: 1. Point in Time Count (PIT); 2. Continuum of Care Housing Inventory Count (HIC); 3. Consultation

OPTIONAL Housing Needs Inventory and Gap Analysis Table

Non-Homeless			
	Current Inventory	**Level of Need**	**Gap Analysis**
	# of Units	# of Households	# of Households
Total Rental Units	#		
Rental Units Affordable to HH at 30% AMI (At-Risk of Homelessness)	#		
Rental Units Affordable to HH at 50% AMI (Other Populations)	#		
0%-30% AMI Renter HH w/ 1 or more severe housing problems (At-Risk of Homelessness)		#	
30%-50% AMI Renter HH w/ 1 or more severe housing problems (Other Populations)		#	
Current Gaps			#

Suggested Data Sources: 1. American Community Survey (ACS); 2. Comprehensive Housing Affordability Strategy (CHAS)

Describe the size and demographic composition of qualifying populations within the PJ's boundaries:

Homeless as defined in 24 CFR 91.5

The 2022 Point in Time Count Data for individuals and families in shelters show Augustans who identify as Black of African American are more likely to experience homelessness in Augusta when compared to other racial identities. Further, those who identify as male are more likely to experience homelessness than other gender identities. Augustans with severe mental illnesses, chronic substance abuse issues, and/or are fleeing domestic violence make up a larger proportion of the special needs groups in the sheltered population.

At Risk of Homelessness as defined in 24 CFR 91.5

The number and demographic composition of the extremely low income households (ELI) in Augusta has been used to describe the size and demographic composition of qualifying populations at-risk of homelessness. The ELI households are likely to be a subset of the ELI population, and real-time assessment of actual housing stability status within the ELI demographic is too volatile to ascertain a true representation without including the characteristics of the broader demographic.

Those at greatest risk of homelessness are severely cost burdened, paying more than 50% of gross monthly income for housing, inclusive of utility costs. The table below is included with data for ELI owner and renter households for all demographic groups combined.

Cost Burden > 50%

	Renter				**Owner**			
	0-30% AMI	**>30-50% AMI**	**>50-80% AMI**	**Total**	**0-30% AMI**	**>30-50% AMI**	**>50-80% AMI**	**Total**
NUMBER OF HOUSEHOLDS								
Small Related	3,059	1,197	100	4,356	488	375	265	1,128
Large Related	509	186	0	695	94	0	0	94
Elderly	727	460	124	1,311	615	395	490	1,500
Other	2,140	677	126	2,943	704	339	130	1,173
Total need by income	6,435	2,520	350	9,305	1,970	1,080	780	3,830

Table 1 – Cost Burden > 50%

Data Source: 2012-2016 CHAS

In summary, the majority of ELI renter households experience severe housing cost burden. In addition, a significant proportion of ELI owner households also experience severe cost burden.

Severe cost burden is an indicator that households may be at risk of homelessness or housing instability, since very little is left for other life necessities after paying for housing and utilities each month. A car repair, illness or injury, or other urgent need may push these households into homelessness or housing instability.

During the recovery from the economic impacts of the Covid-19 pandemic has been Augusta's ability to make use of Emergency Rental Assistance provided under both the CARES ACT and the American Rescue Plan, to assist local renter households with arrearages threatening mass eviction with the secession of the Federal Eviction Moratorium in 2021. Operated in Partnership with United Way of the CSRA, the program served as one of the most vital safety nets for at-risk households in the City of Augusta- the 211 Hotline saw the percentage of callers needing housing or shelter assistance grow by 500% relative to need between 2019 and 2020. Like in many metro American communities, in Augusta income does not meet basic needs of many households. The rate of unemployment and local low paying jobs make it challenging for people with disabilities and older adults with fixed incomes to remain stably housed. Low educational attainment throughout the area impacts access to income and creates employment barriers. Many households have a difficult time accessing educational programs that would help them obtain their high school diploma or GED or attend vocational school. Transportation is also a barrier to education both children and adults. The lack of affordable and accessible quality childcare and early childhood programs also impact the Augusta, Georgia region. For employees and people seeking work outside of traditional work hours have the added challenge of lack of extended hour or overnight care for their children.

For residents with criminal backgrounds or with past eviction histories seeking employment or housing, there are even more limited options. The Augusta area lacks a sufficient number of affordable rental properties. The City of Augusta's renter population, whose income is 30-50% AMI, are the greatest at risk population of being homeless due to substandard conditions of existing housing stock. Outside of recent programs derived from Federal Covid-19 related funding, there have traditionally been few rental assistance programs in Augusta that provide rental deposits, home repair assistance, utility assistance, or eviction defense/eviction expungement. Even for families who are able to obtain rental assistance, it is difficult to find property managers or landlords who accept housing vouchers or other forms of third-party (i.e. assistance) payments.

In further complications of inflation related economic instability, many households in the Augusta area are over income for SNAP benefits (formerly known as food stamps), but are still unable to afford the rising costs of food and other necessities. In many parts of Augusta there are food deserts, limited food pantry options, and transportation challenges that make it hard to access affordable, much less healthy, food options. A high percentage of individuals in the City of

Augusta do not have health insurance (15% or one out of 6 individuals). Since Georgia was one of the states that chose not to adopt Medicaid expansion, ELI households lack the social safety net of subsidized medical care. There are very limited treatment options in the area for people with mental health and substance use issues, particularly for people without health coverage. This combination of factors centralizes the need for increased availability and accessibility of affordable housing in Augusta to bring stability to turbulent economic times in the wake of volatile price environments in many other basic needs.

Fleeing, or Attempting to Flee, Domestic Violence, Dating Violence, Sexual Assault, Stalking, or Human Trafficking, as defined by HUD in the Notice

Domestic violence is one of the leading causes of homelessness for women and their children. Although safe housing can provide a pathway to freedom, there are many barriers that prevent survivors from obtaining or maintaining safe and affordable housing. The majority of survivors experience financial abuse, meaning that they have not had access to the family finances, have been prohibited from working, or have had their credit scores destroyed by an abusive partner. Victims may also face discrimination in accessing or maintaining housing based on the violent or criminal actions of perpetrators. Additionally, victims are limited in the locations and types of housing they can access because of their unique safety and confidentiality needs, and many housing or homelessness assistance programs have barriers that inadvertently exclude victims of violence.

Human trafficking is also an issue in Georgia, specifically in Augusta. National research indicates that many of the risk factors and vulnerabilities of human trafficking reflect circumstances faced by HOME-ARP qualifying populations, including caretaker substance use, involvement with the child welfare and/or foster care system, juvenile justice involvement, mental health concerns, runaway or homeless youth, underemployment or unemployment, and unstable housing, among many others. Two of the top five risks/vulnerabilities for human trafficking are homelessness and unstable housing. The majority of statistics about human trafficking are state level data, such as reports from the World Population Review that indicate that the state of Georgia is one of the most extensive hubs of the United States of human trafficking horror. About four of every 100,000 people in Georgia are human trafficking victims, the 7th highest human trafficking rate in the United States. It's important to understand that because sex trafficking is often conducted on the dark web or other secretive platforms, the full scope of the problem isn't known, which means local and national statistics on human trafficking are likely underestimated. Also, survivors of sex trafficking are often manipulated and coerced, so it's an underreported crime. This combination of data and context makes the issue of human / sex trafficking a major concern in the state of Georgia, including within the Augusta area.

Other populations requiring services or housing assistance to prevent homelessness and other populations at greatest risk of housing instability, as defined by HUD in the Notice

The most recently available CHAS data indicates that there were 26,385 households in Augusta at or below the Area Median Household Income that had issues with either housing affordability or substandard housing conditions. Households that had at least 1 of 4 severe housing problems comprised roughly 15% of the total households in the Augusta area. Over 17,000 households were either cost burdened (paying more than 50 % or gross income for housing) or had zero or negative income, regardless of whether they had any substandard housing issues.

Children and youth are a population that faces homelessness, yet they are not always eligible for homelessness services for the CoC and other funding streams. Local community partners shared that approximately 300-400 school-aged students in the 2021/2022 academic year were facing homelessness under the McKinney-Vento Act definition in the Richmond County school district. That group includes students and their families who are couch surfing, doubled up, or in other unstable housing situations that are not considered "homelessness" under may of the other HUD programs, but they do fall under the "other special populations" definition for HOME-ARP purposes.

Other populations, as defined by HOME-ARP, include those who:

1. Are currently housed and at risk of repeat homelessness;
2. Have incomes at or below 30% AMI and are experiencing severe housing cost burden; and
3. Otherwise meet the definition of at risk of homelessness and have incomes of more than 30% and at or below 50% AMI.

Other Populations: At greatest risk of housing instability – Households with incomes30-50% AMI that meet HUD's §91.5 definition of at risk of homelessness

Households in this category are those with incomes more than 30% and at or below 50% AMI that lack sufficient resources or support networks to prevent homelessness, and

- Have moved more than two times due to economic reasons in the past 60 days;
- Are doubled up with another household due to economic hardship;
- Will be evicted within 21 days;
- Live in a hotel or motel without financial assistance from a nonprofit or government entity;
- Live in an efficiency apartment and are overcrowded;

- Are exiting a publicly funded institution or system of care

HUD Comprehensive Housing Affordability Strategy (CHAS) 2014-2018 data Table 10 provides information on households that include more than one family, household income level and overcrowding. The CHAS data indicates that there are approximately over 23,000 renter households with incomes between 30 and 50 % AMI that are at risk of homelessness in the City because of at least one of the housing problems as defined by HUD. In addition, 919 households are living in rental dwellings that are considered "overcrowded" by HUD standards (i.e. 1.5 persons per bedroom, usually with more than one family per unit).

Housing Problems (Households with one of the listed needs)

	Renter					Owner				
	0-30% AMI	**>30-50% AMI**	**>50-80% AMI**	**>80-100% AMI**	**Total**	**0-30% AMI**	**>30-50% AMI**	**>50-80% AMI**	**>80-100% AMI**	**Total**
NUMBER OF HOUSEHOLDS										
Substandard Housing - Lacking complete plumbing or kitchen facilities	205	80	14	80	379	55	20	10	10	95
Severely Overcrowded - With >1.51 people per room (and complete kitchen and plumbing)	120	70	105	0	295	8	19	25	15	67
Overcrowded - With 1.01-1.5 people per room (and none of the above problems)	165	204	230	25	624	10	10	64	130	214

	Renter					Owner				
	0-30% AMI	>30-50% AMI	>50-80% AMI	>80-100% AMI	Total	0-30% AMI	>30-50% AMI	>50-80% AMI	>80-100% AMI	Total
Housing cost burden greater than 50% of income (and none of the above problems)	6,354	2,244	279	10	8,887	1,849	1,110	885	135	3,979
Housing cost burden greater than 30% of income (and none of the above problems)	930	2,359	3,244	475	7,008	434	914	1,985	742	4,075
Zero/negative Income (and none of the above problems)	1,650	0	0	0	1,650	655	0	0	0	655

Table 2 – Housing Problems Table

Data Source: 2014-2018 CHAS

Unmet Service Needs of Qualifying Populations

Based on consultation with service providers in the City, the greatest unmet service needs of qualifying populations, including sheltered and unsheltered homeless populations, currently housed populations at risk of homelessness, other families requiring services or assistance to prevent homelessness, and those at greatest risk of housing instability or in unstable housing situations are:

- mental health services
- landlord/tenant liaison services
- housing search/counseling services
- childcare assistance
- financial assistance

Additional unmet service needs of qualifying populations, including sheltered and unsheltered homeless populations, currently housed populations at risk of homelessness, other families requiring services or assistance to prevent homelessness, and those at greatest risk of housing instability or in unstable housing situations include the following:

- Case management services
- Credit repair services
- Education Services
- Food assistance
- Job training and employment services
- Legal services
- Mediation services
- Outpatient health services
- Outreach services
- Substance abuse treatment
- Services for special populations

Describe the unmet housing and service needs of qualifying populations:

Sheltered and Unsheltered Homeless as defined in 24 CFR 91.5

Data analysis shows a gap of at least 250 adult shelter beds and 50 or more family / child shelter beds. This indicates unmet housing needs among unsheltered homeless adults in Augusta, Georgia. The true number of unsheltered homeless adults is likely to be larger due to the challenges of collecting PIT data. In addition, shelter beds are unavailable to a small but not irrelevant portion of the local unsheltered homeless population based upon their barriers related to criminal status, documentation and other related obstacles to attaining shelter in Augusta.

In terms of services for sheltered and unsheltered homeless populations, survey data and HTF interview results indicate a strong need for supportive services and other assistance such as transportation, mental health care, legal care, and other services. The unsheltered and sheltered homeless population in Augusta also suffer from mental health issues and/or substance abuse problems, which can hinder them from obtaining and retaining employment. They also tend to isolate themselves from the public, making it more challenging for provider outreach to make contact and assist individuals with case management.

People experiencing homelessness who rely on public transportation in Augusta have found transit difficult to navigate, with complicated bus routes and limited stops and time offerings. Buses are currently underutilized and there is no alternative centralized transportation system in the City. For people experiencing homelessness (and others), who need to connect with services, attend school/work/ trainings, or even check available housing listings, the inability to get around the City serves as barrier to accessing critical services that would help facilitate housing stability and permanency, and improve quality of life overall. Moreover, the hours of transportation are limited to traditional work hours, leaving people who work second or third shifts unable to use transportation to get to and from jobs. Most of the transportation lines focus toward downtown, so additional challenges exist for people who need public transportation to access jobs or services outside of the downtown area.

People experiencing homelessness in Augusta also report a lack of available jobs they can fairly compete for, with employment opportunities often going to individuals with more experience/skills. Jobs that are available are often part-time, below living wage, and evening/graveyard shifts. Having to juggle multiple low-wage jobs to make ends meet and cover basic costs, make the availability for extended hour or overnight childcare options all the more essential. In addition, employment agencies were reported to be clustered in one area of the City that is not central to “downtown,” where shelters are located, making it less accessible for people experiencing homelessness to obtain employment.

At Risk of Homelessness as defined in 24 CFR 91.5

- Many formerly homeless and rapid re-housing assistance recipients live from paycheck to paycheck and often need more than twelve months of supportive services and financial assistance to secure decent safe housing that can remain affordable to them. Rent and utility assistance continue to be needed by low-income residents of Augusta, Georgia.
- The lack of health insurance can be a key determinant of health status and housing instability along with inconsistent access to health care, which often results in illness, longer hospitalizations, and increased vulnerability to mental health conditions.
- The limitations of the local transportation system and impact the ability for people at risk of homelessness to retain employment and stable housing. For people at risk of

homelessness, stable employment may be located outside the transportation systems reach and/or buses do not run during their evening or weekend working shifts. For families working late night shifts, they are often forced to resort to taking Ubers back home which are increasingly cost prohibitive for households that are already cost burdened and only earning minimum wage.

Fleeing, or Attempting to Flee, Domestic Violence, Dating Violence, Sexual Assault, Stalking, or Human Trafficking, as defined by HUD in the Notice

Enter narrative response here.

Other populations requiring services or housing assistance to prevent homelessness and other populations at greatest risk of housing instability as defined by HUD in the Notice

Enter narrative response here.

Identify any gaps within the current shelter and housing inventory as well as the service delivery system:

Enter narrative response here.

Under Section IV.4.2.ii.G of the HOME-ARP Notice, a PJ may provide additional characteristics associated with instability and increased risk of homelessness in their HOME-ARP allocation plan. These characteristics will further refine the definition of "other populations" that are "At Greatest Risk of Housing Instability," as established in the HOME-ARP Notice. If including these characteristics, identify them here:

Identify priority needs for qualifying populations:

Priority needs for qualifying populations are:

- Affordable rental housing
- Supportive services including:
  - Landlord/tenant liaison services o mental health services
  - financial assistance services
  - transportation services
  - housing search and housing counseling services
  - childcare assistance
- Tenant-based rental assistance

Explain how the PJ determined the level of need and gaps in the PJ's shelter and housing inventory and service delivery systems based on the data presented in the plan:

Enter narrative response here.

HOME-ARP Activities

Describe the method(s) that will be used for soliciting applications for funding and/or selecting developers, service providers, sub recipients and/or contractors:

The City will solicit applications from developers, service providers, and/or nonprofits to administer eligible activities and/or develop HOME-ARP Rental Housing. A Request for Proposals (RFP) will be issued. The RFP will, at a minimum, specify eligible activities, eligible applicants, minimum and maximum funding amounts, application thresholds, and will provide instructions on how to submit a proposal.

Describe whether the PJ will administer eligible activities directly:

Augusta, Georgia will administer eligible activities related to the acquisition, construction, renovation and rehabilitation of affordable housing units utilizing HOME ARP funding.

If any portion of the PJ's HOME-ARP administrative funds are provided to a sub recipient or contractor prior to HUD's acceptance of the HOME-ARP allocation plan because the sub recipient or contractor is responsible for the administration of the PJ's entire HOME-ARP grant, identify the sub recipient or contractor and describe its role and responsibilities in administering all of the PJ's HOME-ARP program:

Augusta, Georgia will administer eligible activities related to the acquisition, construction, renovation and rehabilitation of affordable housing units utilizing HOME ARP funding and will not provide sub recipient contracts utilizing HOME ARP funds.

In accordance with Section V.C.2. of the Notice (page 4), PJs must indicate the amount of HOME-ARP funding that is planned for each eligible HOME-ARP activity type and demonstrate that any planned funding for nonprofit organization operating assistance, nonprofit capacity building, and administrative costs is within HOME-ARP limits.

Use of HOME-ARP Funding

	Funding Amount	Percent of the Grant	Statutory Limit
Development of Affordable Rental Housing	$ 2,960,721	**85%**	**N/A**
Administration and Planning	$ 522,480	**15 %**	15%
Total HOME ARP Allocation	$ 3,483,201		

Describe how the PJ will distribute HOME-ARP funds in accordance with its priority needs identified in its needs assessment and gap analysis:

Development and renovation of affordable rental housing units. This plan allocates $2,960,721 for the development and renovation of affordable rental housing units using HOME-ARP funds. During the consultation process, the development of other eligible activity resources was discussed and debated. However, the resounding feedback focused on the lack of affordable rental housing units available, specifically to the qualifying populations that this plan aims to serve. Based on the assessments and analysis provided in this plan, the City believes the need is great and should be addressed, and is therefore focusing investment of HOME-ARP funds in to the development of affordable rental housing units.

The City of Augusta has limited affordable rental housing stock. Many of the affordable rental housing units that do exist are old and need updating. According to stakeholder feedback, many landlords or property managers would prefer to rent sub-standard housing to low-income people who are willing to rent, rather than invest in the units to bring them up to code or to update them to be more accessible and eligible to receive housing assistance. Of the units currently in the community's inventory, those that do come on the market and are available for rent to qualifying populations, there are insufficient numbers of the size needed for people on the verge of homelessness. The city lacks studio units or one-bedroom units.

The City of Augusta proposes to use HOME-ARP funds to acquire parcels for, construct and/or rehabilitate existing housing stock for at least 40 units of affordable housing. With the unexpected and unprecedented resources made available through the HOME-ARP allocation, the sustainable investment in increasing the affordable housing stock at this scale will have tremendous long-term impact on the nature of Augusta's housing stock in to the future. The introduction of these affordable housing units will also help to address the unit gap created by local landlords that are often unwilling to rent to the qualifying populations this plan aims to serve. Also not to be understated is that this will also afford the opportunity for some HOME-ARP eligible households to rent housing that is decent, safe and affordable.

Program Administration and Planning. This plan allocates $522,480 towards the administration and planning functions of the HOME-ARP funds, in line with the statutory limit of 15% of the total award.

Describe how the characteristics of the shelter and housing inventory, service delivery system, and the needs identified in the gap analysis provided a rationale for the plan to fund eligible activities:

The gaps analysis reflected Augusta, Georgia has insufficient housing and housing services, limited access to support services and an unstable combination of crisis services. These all leave Augusta at a deficit in meeting the housing needs of residents of the community, particularly those who are low and moderate-income and the qualifying populations that this plan aims to serve. Augusta's recent Homeless Task Force Strategic Plan, in addition to interviews and surveys completed in the composition of both that plan and the HOME-ARP Cost Allocation Plan, reflected the same sentiments that these gaps, specifically the lack of affordable rental housing units, are impediments to Augusta's response to the current housing stability crisis.

HOME-ARP funds represent a "once-in-a-lifetime" opportunity to respond to and intentionally address these gaps. Of the opportunities to use the funding, paired with other community resources, the best use of the funds is to focus on developing affordable rental housing and the services to help people maintain their housing. The community has several sources of funding of tenant-based rental assistance including HCV, CoC, EHV, ESG, HOPWA, state funded behavioral health programs, as well as EHV and Mainstream Vouchers.

Augusta's community partners have continuously expressed the challenges and impediments created with tenant-based rental assistance programs not being able to access decent, safe, affordable units in our community. This creates a systemic inefficiency when there are, unfortunately, large numbers of voucher holders unable to utilize their housing benefit due to this lack of available housing stock. This lack of affordable housing has downstream impacts, not just on residents experiencing or at-risk of experiencing homelessness, but also people fleeing domestic violence and other populations that regularly experience housing instability.

As Augusta continues to grow its economic base with infusion of jobs at Fort Gordon Cyber Command and the downtown Cyber Center campus, the increased local interest in market-rate development has created a stall in the development of affordable housing units, particularly for rental opportunities. In every year's planning process, there is consistent feedback on the insufficient housing stock for those residents that need it most.

The investment of HOME-ARP funds to address the longitudinal issues surrounding affordable rental housing availability is a catalyst in moving these conversations forward an d helping to ensure that Augusta is a community where anyone that wants to can have a stable home. The new affordable rental housing units developed using HOME-ARP funds will be units that can make use of the many tenant-based rental assistance projects and funds already available to low and moderate-income residents of Augusta.

HOME-ARP Housing Production Goals

Estimate the number of affordable rental housing units for qualifying populations that the PJ will produce or support with its HOME-ARP allocation:

The City estimates it will develop up to approximately 40 affordable rental units with the funds allocated by this plan, either through new construction, renovation or rehabilitation. There is not yet a plan on the table for this project, so the City cannot project exact units, or whether they will be new construction or an acquisition and/or rehabilitation of an existing structure.

Describe the specific affordable rental housing production goal that the PJ hopes to achieve and describe how the production goal will address the PJ's priority needs:

With respect to this plan, the goal of the City of Augusta is to increase affordable rental housing stock in the community, specifically smaller units, such as studios and one-bedroom apartments. The HOME-ARP allocation will be used to create affordable rental housing units with 100% of the units developed made available to HOME-ARP qualifying populations. Augusta will look to optimize impact from this funding to support new construction, renovation and rehabilitation; the end goal being the maximum amount of decent, safe and affordable units added to the community's inventory as possible. Through solicitation for the development of these units, Augusta will emphasize efficiency wherever possible, asking potential partners and developers to leverage other resources that may be available from other funding sources to best meet the needs of the HOME-ARP qualifying populations.

All throughout the consultation process, feedback from stakeholders in the community gave the clear impression that there is a desperate need for more units of affordable housing. People mentioned the lack of units available, the substandard condition of some of the units that are being rented currently, the number of abandoned buildings, and the recent closing of facilities that support qualifying populations.

Stakeholders also identified the insufficient number of small units available for people to rent in the City. Given the limited resources available from HOME-ARP and the need for smaller units, the City will leverage the HOME-ARP funds for smaller units, enabling a greater quantity of new affordable housing to come online in the City.

Preferences

A preference provides a priority for the selection of applicants who fall into a specific QP or category (e.g., elderly or persons with disabilities) within a QP (i.e., subpopulation) to receive assistance. A preference permits an eligible applicant that qualifies for a PJ-adopted preference to be selected for HOME-ARP assistance before another eligible applicant that does not qualify for a preference. A method of prioritization is the process by which a PJ determines how two or more eligible applicants qualifying for the same or different preferences are selected for HOME-ARP assistance. For example, in a project with a preference for chronically homeless, all eligible QP applicants are selected in chronological order for a HOME-ARP rental project except that eligible QP applicants that qualify for the preference of chronically homeless are selected for occupancy based on length of time they have been homeless before eligible QP applicants who do not qualify for the preference of chronically homeless.

Please note that HUD has also described a method of prioritization in other HUD guidance. Section I.C.4 of Notice CPD-17-01 describes Prioritization in CoC CE as follows:

"Prioritization. In the context of the coordinated entry process, HUD uses the term "Prioritization" to refer to the coordinated entry-specific process by which all persons in need of assistance who use coordinated entry are ranked in order of priority. The coordinated entry prioritization policies are established by the CoC with input from all community stakeholders and must ensure that ESG projects are able to serve clients in accordance with written standards that are established under 24 CFR 576.400(e). In addition, the coordinated entry process must, to the maximum extent feasible, ensure that people with more severe service needs and levels of vulnerability are prioritized for housing and homeless assistance before those with less severe service needs and lower levels of vulnerability. Regardless of how prioritization decisions are implemented, the prioritization process must follow the requirements in Section II.B.3. and Section I.D. of this Notice."

If a PJ is using a CE that has a method of prioritization described in CPD-17-01, then a PJ has preferences and a method of prioritizing those preferences. These must be described in the HOME-ARP allocation plan in order to comply with the requirements of Section IV.C.2 (page 10) of the HOME-ARP Notice.

In accordance with Section V.C.4 of the Notice (page 15), the HOME-ARP allocation plan must identify whether the PJ intends to give a preference to one or more qualifying populations or a subpopulation within one or more qualifying populations for any eligible activity or project.

- Preferences cannot violate any applicable fair housing, civil rights, and nondiscrimination requirements, including but not limited to those requirements listed in 24 CFR 5.105(a).

- The PJ must comply with all applicable nondiscrimination and equal opportunity laws and requirements listed in 24 CFR 5.105(a) and any other applicable fair housing and civil rights laws and requirements when establishing preferences or methods of prioritization.

While PJs are not required to describe specific projects in its HOME-ARP allocation plan to which the preferences will apply, the PJ must describe the planned use of any preferences in its HOME-ARP allocation plan. This requirement also applies if the PJ intends to commit HOME-ARP funds to projects that will utilize preferences or limitations to comply with restrictive eligibility requirements of another project funding source. If a PJ fails to describe preferences or limitations in its plan, it cannot commit HOME-ARP funds to a project that will implement a preference or limitation until the PJ amends its HOME-ARP allocation plan.
For HOME-ARP rental housing projects, Section VI.B.20.a.iii of the HOME-ARP Notice (page 36) states that owners may only limit eligibility or give a preference to a particular qualifying population or segment of the qualifying population if the limitation or preference is described in the PJ's HOME-ARP allocation plan. Adding a preference or limitation not previously described in the plan requires a substantial amendment and a public comment period in accordance with Section V.C.6 of the Notice (page 16).

Identify whether the PJ intends to give preference to one or more qualifying populations or a subpopulation within one or more qualifying populations for any eligible activity or project:

ARP requires HOME-ARP activities to primarily benefit households in the qualifying populations. To improve the feasibility and maintain the long-term viability of projects with HOME-ARP rental units for qualifying households, a PJ may invest HOME-ARP funds in units that are not restricted for occupancy solely for qualifying populations as described in the HOME ARP regulations.

- Preferences cannot violate any applicable fair housing, civil rights, and nondiscrimination requirements, including but not limited to those requirements listed in 24 CFR 5.105(a).
- PJs are not required to describe specific projects to which the preferences will apply.

Units developed by Augusta, Georgia utilizing the HOME ARP Allocation will be developed with preferences designed to address the housing needs of the qualifying populations described in the HOME ARP regulations, specifically the Chronically Homeless population in the Augusta community.

If a preference was identified, explain how the use of a preference or method of prioritization will address the unmet need or gap in benefits and services received by individuals and families in the qualifying population or subpopulation of qualifying population, consistent with the PJ's needs assessment and gap analysis:

Augusta, Georgia has a large unmet need in the Permanent Supportive Housing inventory available to residents of the community who are experiencing long-term, repetitive episodic homelessness and require intensive service supports to acquire and sustain permanent housing.

Referral Methods

PJs are not required to describe referral methods in the plan. However, if a PJ intends to use a coordinated entry (CE) process for referrals to a HOME-ARP project or activity, the PJ must ensure compliance with Section IV.C.2 of the Notice (page10).

A PJ may use only the CE for direct referrals to HOME-ARP projects and activities (as opposed to CE and other referral agencies or a waitlist) if the CE expands to accept all HOME-ARP qualifying populations and implements the preferences and prioritization established by the PJ in its HOME-ARP allocation plan. A direct referral is where the CE provides the eligible applicant directly to the PJ, sub recipient, or owner to receive HOME-ARP TBRA, supportive services, admittance to a HOME-ARP rental unit, or occupancy of a NCS unit. In comparison, an indirect referral is where a CE (or other referral source) refers an eligible applicant for placement to a project or activity waitlist. Eligible applicants are then selected for a HOME-ARP project or activity from the waitlist.

The PJ must require a project or activity to use CE along with other referral methods (as provided in Section IV.C.2.ii) or to use only a project/activity waiting list (as provided in Section IV.C.2.iii) if:

1. the CE does not have a sufficient number of qualifying individuals and families to refer to the PJ for the project or activity;
2. the CE does not include all HOME-ARP qualifying populations; or,
3. the CE fails to provide access and implement uniform referral processes in situations where a project's geographic area(s) is broader than the geographic area(s) covered by the CE

If a PJ uses a CE that prioritizes one or more qualifying populations or segments of qualifying populations (e.g., prioritizing assistance or units for chronically homeless individuals first, then prioritizing homeless youth second, followed by any other individuals qualifying as homeless, etc.) then this constitutes the use of preferences and a method of prioritization. To implement a CE with these preferences and priorities, the PJ must include the preferences and method of prioritization that the CE will use in the preferences section of their HOME-ARP allocation plan. Use of a CE with embedded preferences or methods of prioritization that are not contained in the PJ's HOME-ARP allocation does not comply with Section IV.C.2 of the Notice (page10).

Identify the referral methods that the PJ intends to use for its HOME-ARP projects and activities. PJ's may use multiple referral methods in its HOME-ARP program. (Optional):

For HOME-ARP Rental Housing Projects, Augusta, Georgia intends to utilize the community's existing Coordinated Entry System (CES) for referral and placement in HOME-ARP Rental Units. Augusta's CES, the Marion Barnes Resource Center, is operated by the local Community Action Agency (CAA) CSRA Economic Opportunity Authority, also known as CSRA EOA, Inc. The CES is overseen by the local Continuum of Care through Augusta's Homeless Task Force's Executive Board.

Referrals to the HOME-ARP Rental Housing Project Sponsor, Augusta Housing and Community Development, shall incorporate all necessary considerations for HOME-ARP Preferences, Fair Housing Rights and Compliance, local service prioritization methodology and other factors to formulate the referrals for placement in HOME-ARP Rental Housing units.

If the PJ intends to use the coordinated entry (CE) process established by the CoC, describe whether all qualifying populations eligible for a project or activity will be included in the CE process, or the method by which all qualifying populations eligible for the project or activity will be covered. (Optional):

For the sheltered, unsheltered, and at risk of homelessness populations, the City will recommend use of the Coordinated Entry System (CES), which assesses each individual or household to identify any immediate, emergent needs and risk factors, and to evaluate their overall level of vulnerability, including basic and housing-related needs. Based on those assessments, the Coordinated Entry System will make referrals to participating agencies. For those requiring services or housing assistance to prevent homelessness, and those at greatest risk of housing instability or unsuitable housing situations who may fall outside CES, the City will also utilize the CES system run by CSRA Economic Opportunity Authority (CSRA EOA) to provide referrals to participating providers.

CSRA EOA is an integral partner working to serve vulnerable populations. They have done a great deal of work to research and identify other qualifying populations, partnering with local organizations that both work within and outside the homeless system of care. HUD, through CSRA EOA, is a primary funder of the CES Information & Referral system. As calls for assistance come into the CES system and through local partners who serve qualifying populations who are not served by CES (e.g., the school district identifies families experiencing housing instability who are "couch surfing" or "doubled up," therefore ineligible for assistance through CES), referrals for affordable housing will be made directly to the HOME-ARP projects. The HOME-ARP providers will develop lists from those referrals based on first come, first served criteria. As units become available, the HOME-ARP provider will make referrals based on the households determined to have the highest service need and largest barriers to traditional affordable housing rental markets.

If the PJ intends to use the CE process established by the CoC, describe the method of prioritization to be used by the CE. (Optional):

Augusta's CoC currently prioritizes placement for Permanent Supportive Housing through a standardized assessment of persons experiencing chronic homelessness and possessing one more disabling conditions. Prioritization for placement is done through the cultivation of an acuity score that is used to ensure that the hardest to serve (i.e. residents with most barriers to housing stability) are prioritized for placement in Permanent Supportive Housing units.

If the PJ intends to use both a CE process established by the CoC and another referral method for a project or activity, describe any method of prioritization between the two referral methods, if any. (Optional):

Augusta intends to utilize an expanded CE process established in partnership with the local Continuum of Care for referral and placement in HOME-ARP Rental Housing Units.

Limitations in a HOME-ARP rental housing or NCS project

Limiting eligibility for a HOME-ARP rental housing or NCS project is only permitted under certain circumstances.

- PJs must follow all applicable fair housing, civil rights, and nondiscrimination requirements, including but not limited to those requirements listed in 24 CFR 5.105(a). This includes, but is not limited to, the Fair Housing Act, Title VI of the Civil Rights Act, section 504 of Rehabilitation Act, HUD's Equal Access Rule, and the Americans with Disabilities Act, as applicable.
- A PJ may not exclude otherwise eligible qualifying populations from its overall HOME-ARP program.
- Within the qualifying populations, participation in a project or activity may be limited to persons with a specific disability only, if necessary, to provide effective housing, aid, benefit, or services that would be as effective as those provided to others in accordance with 24 CFR 8.4(b)(1)(iv). A PJ must describe why such a limitation for a project or activity is necessary in its HOME-ARP allocation plan (based on the needs and gap identified by the PJ in its plan) to meet some greater need and to provide a specific benefit that cannot be provided through the provision of a preference.
- For HOME-ARP rental housing, section VI.B.20.a.iii of the Notice (page 36) states that owners may only limit eligibility to a particular qualifying population or segment of the qualifying population <u>if the limitation is described in the PJ's HOME-ARP allocation plan</u>.
- PJs may limit admission to HOME-ARP rental housing or NCS to households who need the specialized supportive services that are provided in such housing or NCS. However, no otherwise eligible individuals with disabilities or families including an individual with a

disability who may benefit from the services provided may be excluded on the grounds that they do not have a particular disability.

Describe whether the PJ intends to limit eligibility for a HOME-ARP rental housing or NCS project to a particular qualifying population or specific subpopulation of a qualifying population identified in section IV.A of the Notice:

Augusta does not intend to utilize any Limitations to the eligible Qualifying Populations for HOME-ARP Rental Housing units.

If a PJ intends to implement a limitation, explain why the use of a limitation is necessary to address the unmet need or gap in benefits and services received by individuals and families in the qualifying population or subpopulation of qualifying population, consistent with the PJ's needs assessment and gap analysis:

Augusta does not intend to utilize any Limitations to the eligible Qualifying Populations for HOME-ARP Rental Housing units.

If a limitation was identified, describe how the PJ will address the unmet needs or gaps in benefits and services of the other qualifying populations that are not included in the limitation through the use of HOME-ARP funds (i.e., through another of the PJ's HOME-ARP projects or activities):

Augusta does not intend to utilize any Limitations to the eligible Qualifying Populations for HOME-ARP Rental Housing units.

HOME-ARP Refinancing Guidelines

If the PJ intends to use HOME-ARP funds to refinance existing debt secured by multifamily rental housing that is being rehabilitated with HOME-ARP funds, the PJ must state its HOME-ARP refinancing guidelines in accordance with 24 CFR 92.206(b). The guidelines must describe the conditions under with the PJ will refinance existing debt for a HOME-ARP rental project, including:

The City of Augusta does not plan to use HOME-ARP funds to refinance existing debt secured by multifamily housing that is rehabilitated with HOME funds. Therefore, refinancing guidelines pursuant to 24 CFR 92.206(b) are not applicable to this HOME-ARP Allocation Plan.

APPENDIX A: CITIZEN PARTICIPATION

Summary of Citizen Participation Comments

xxx-xxx, 2023 Allocation Plan Public Review and Comment Period

A summary of comments and recommendation received during the public comment period and at the public hearing will be included prior to the submission of this Allocation Plan to HUD.

Public Hearing on xxxx, 2023

A summary of comments and recommendation received during the public comment period and at the public hearing will be included prior to the submission of this Allocation Plan to HUD.

APPENDIX B:

SF-424 Grant Applications, SF-424D Assurances and Allocation Plan Certifications

Detailed Budget Breakdown

Name and Address of Applicant:
Grant Agreement Number: M21- MP130206 Augusta, Georgia Housing and Community Development 510 Fenwick Street Augusta, GA 30901

HOME Investment Partnership Program- American Resue Plan Cost Allocation Plan

1. Personnel (Direct Labor) Salary &	Budget	Salary & Fringe	FTE	Admin	FY 2023	FY 2024	FY 2025	FY 2026	Total Cost	Percentage of Total
Homeless Coordination (Vacant) 1 Concurrent with the term of the Grant	**202,844.00**	50,711.00 .	1	100%	50,711.00	50,711.00	50,711.00	50,711.00	202,844.00	**6%**
2. Supplemental Pay Provide where applicable, supplemental pay for all affected HCD employees	**319,636.00**	**n/a**		**n/a**	79,909.00	79,909.00	79,909.00	79,910.00	319,637.00	**9%**
3. Construction Services New Construction and Rehabiliation of Exisiting Units	**2,960,720.00**	**n/a**		**n/a**	740,180.00	740,180.00	740,180.00	740,180.00	2,960,720.00	**85%**
					870,800.00	**870,800.00**	**870,800.00**	**870,801.00**	**3,483,201.00**	**100%**

Commission Meeting

March 7, 2023

Purchase Of Meter Registers

Department:	Utilities
Presenter:	N/A
Caption:	Motion to **approve** purchase of 300 meter registers for Augusta Utilities. **(Approved by Engineering Services Committee February 28, 2023)**
Background:	Purchase Order already approved by Procurement
Analysis:	N/A
Financial Impact:	$37,500
Alternatives:	N/A
Recommendation:	N/A
Funds are available in the following accounts:	Funds already encumbered P450614
REVIEWED AND APPROVED BY:	Wes Byne

Item 9.

PURCHASE ORDER

AUGUSTA, GEORGIA

SUITE 605, PROCUREMENT DEPARTMENT
535 TELFAIR STREET, MUNICIPAL BUILDING 1000
AUGUSTA, GEORGIA 30901-2377
PHONE: (706) 821-2422

PURCHASE ORDER NO. P450614

DATE	DEPARTMENT	VENDOR PHONE #	REQUISITION/QUOTE NO.
01/25/23	000000		R371044

VENDOR #	E-VERIFY #	EMAIL
17558		

PURCHASE ORDER NUMBER ABOVE MUST APPEAR ON ALL INVOICES, SHIPPING PAPERS, AND PACKAGES.

VENDOR
CONSOLIDATED PIPE
P O BOX 2153
BIRMINGHAM, AL 35287

ATTN: EMERGENCY
BID NUMBER:
CONTRACT #:
BUYER:

SHIP TO:
UTILITIES WAREHOUSE WYLDS RD.
1840 WYLDS RD.
AUGUSTA, GA 30909

BILL TO:
AUGUSTA, GEORGIA
ACCOUNTING DEPARTMENT, SUITE 800
535 TELFAIR STREET, MUNICIPAL BUILDING 1000
AUGUSTA, GA 30901-2379
(706) 821-2335

ALL INVOICES AND CORRESPONDENCE MUST BE SENT TO ABOVE ADDRESS REGARDLESS OF SHIPPING DESTINATION.

ITEM #	QUANTITY	UNIT	PRODUCT ID	DESCRIPTION	UNIT PRICE	AMOUNT
0001	300	EACH		ELINX METER REGISTER W/ITRON CONNECTOR W/BADGER METER PLASTIC KIT 5/8X3/4 506-00-0000/11-34211	125.00	37,500.00

CONDITIONS - READ CAREFULLY

1. The purchaser is exempt by statue from payment of Federal, State, and Municipal sales, excise and other taxes.
2. Shipping charges prepaid by vendor.
3. Payment will be made on complete shipments only, unless otherwise requested.
4. **DELIVERY TICKET MUST ACCOMPANY GOODS.**
5. No back orders. We will reorder if available.
6. Please make deliveries between 9 A.M. and 4 P.M.
7. All goods received with subsequent privilege to inspect and return at Vendor's expense if defective or not in compliance with our specifications.
8. Indoor delivery if necessary.
9. Payment Net 30 or according to contract.

NET TOTAL..... 37,500.00

APPROVED FOR ISSUE

G A Sims

PROCUREMENT DIRECTOR

VENDOR COPY

Commission Meeting

March 7, 2023

AUD Phinizy Hunting Resolution

Department:	Utilities
Presenter:	Wes Byne
Caption:	Motion to **approve** resolution regarding hunting around the Phinizy Swamp Nature Park and the Constructed Wetlands. **(Approved by Engineering Services Committee February 28, 2023)**
Background:	Augusta Utilities would like to allow Ga DNR to patrol and regulate permitted outdoor activities around the constructed wetlands and Phinizy Swamp Nature Park. This document grants DNR permission to act on our behalf.
Analysis:	None Required
Financial Impact:	None
Alternatives:	None Recommended
Recommendation:	Approve a resolution regarding hunting around the Phinizy Swamp Nature Park and Constructed Wetlands.
Funds are available in the following accounts:	N/A
REVIEWED AND APPROVED BY:	Wes Byne

GEORGIA
DEPARTMENT OF NATURAL RESOURCES

LAW ENFORCEMENT DIVISION
Law Enforcement *Off The Pavement*

MARK WILLIAMS
COMMISSIONER

THOMAS BARNARD
COLONEL

COUNTY OF RICHMOND
STATE OF GEORGIA

1.

I, Takiyah Douse, as Augusta's Interim Administrator, being duly sworn on oath, depose and say:

That Augusta, Georgia is [redacted] the owner/lessee of the land in RICHMOND County, Georgia described in the attached deed/plat/survey, a copy of which is attached hereto as Exhibit "A" and incorporated herein by reference.

2.

That I have granted permission to or am willing to allow the people named in Exhibit "B" attached hereto and incorporated herein by reference to;

- ❑ Hunt
- ❑ Fish
- ❑ Trap
- ❑ Take Shellfish
- ❑ Take Artifacts
- ❑ Hunt Deer Over Bait in Southern Zone (Landowner Only)

on any part of said land.

3.

Any person not named on Exhibit "B" does not have my permission to hunt/trap/fish/take shellfish/ take artifacts or hunt deer over bait (Southern Zone) from said land. I will consider any person not listed who is found engaged in such activity (ies) on said land to be a trespasser and hereby request any officer on the Department of Natural Resources having arrest power, to charge such person with a violation of GA. Code: 27-3-1/27-4-2/27-3-63, as applicable.

Sworn to and subscribed

before me this ____ Day

of _____, 20___.

Notary Public

_____

_____

Affiant

_____

Takiyah Douse, Interim Administrator for Augusta, Georgia

Street Address/P. O. Box

535 Telfair Street, Suite 910

City, State, Zip

Augusta, Georgia

Phone Number

(706) 821-2400

EXHIBIT "B"

NAME ADDRESS CITY & ZIP

1. _____

2. _____

3. _____

4. _____

5. _____

6. _____

7. _____

8. _____

9. _____

10. _____

11. _____

12. _____

13. _____

14. _____

15. _____

*Be sure to list the names of **all** persons, including family members that have permission to hunt or fish on the property. Those persons with written permission on their person signed by the "Affiant" do not have to be listed above. Members of hunting clubs with membership cards will be considered to have permission when hunting/fishing/trapping on club property and do not have to be listed above. Please print or type only.

Instructions for Landowner Affidavit:

1. Complete form.

2. Have the form signed by a notary public.

3. Include a hand drawn map, surveyor's map, or aerial photograph showing the landlines of the property.

4. Include a list of names of persons that have permission to hunt or fish on the property. If membership cards are issued, submit a copy of the card, which is carried by the individual.

5 Return the completed form, map and list of names to the following address:

Department of Natural Resources
Law Enforcement Division
Address
City, State, Zip
Office Phone Number

Augusta Utilities Department

Property lines for 136-0-001-00-0 & 159-0-001-00-0

Created: Michele Bryce on 18 January, 2023

Augusta, GA Disclaimer
This data represented on this map has been compiled by the best method available. Accuracy is contingent upon the source information as compiled by various agencies and departments both internal and external to the consolidated government of Augusta, GA.

Augusta, GA and the companies contracted to develop this data assume no legal responsibilities for the information or accuracy contained on this map.

It is strictly forbidden to sell or reproduce these maps or data for any reason without the written consent of the Augusta-Richmond County Commission.

RESOLUTION TO AUTHORIZE GEORGIA DEPARTMENT OF NATURAL RESOURCES TO PATROL AND REGULATE PHINIZY SWAMP AND CONSTRUCTED WETLANDS.

WHEREAS, Augusta, Georgia is the owner of property that is constructed wetlands and the Phinizy Swamp Nature Park; and

WHEREAS, the property is located along the property lines for Map and Parcel 136-6-001-00-0 and 159-0-001-00-0 located in Augusta, Georgia; and

WHEREAS, the Georgia Department of Natural Resources Law Enforcement Division has authorities granted pursuant to O.C.G.A. §27-3-1, §27-4-2 and §27-3-63; and

WHEREAS, Augusta would request the Georgia Department of Natural Resources to patrol and regulate permitted outdoor activities on said identified property; and

WHEREAS, it is necessary and appropriate for a resolution be adopted authorizing the execution of the Landowner Affidavit by the Mayor and the Clerk of Commission.

NOW THEREFORE, it is hereby resolved as follows:

1. That Augusta request the Georgia Department of Natural Resources to patrol and regulate permitted outdoor activities on Map and Parcel 136-6-001-00-0 and 159-0-001-00-0 located in Augusta, Georgia.
2. It is further resolved that the Mayor and Clerk of Commission of Augusta, Georgia are hereby authorized to execute the Landowner Affidavit and any additional documents necessary as may reasonably be required, in form approved by counsel for Augusta.
3. This Resolution shall be recorded in the Minutes of the Augusta, Georgia Commission.

Adopted this ____ day of _____, 2023.

_____
Garnett L. Johnson
As its Mayor

Attest:

_____
Lena J. Bonner, Clerk of Commission

Seal:

CERTIFICATION

The undersigned Clerk of Commission, Lena J. Bonner, hereby certifies that the foregoing Resolution was duly adopted by the Augusta, Georgia Board of Commission on_____, 2023 and that such Resolution has not been modified or rescinded as of the date hereof and the undersigned further certifies that attached hereto is a true copy of the Resolution which was approved and adopted in the foregoing meeting(s).

_____
Lena J. Bonner, Clerk of Commission

Commission Meeting

March 7, 2023

Change Order AUD Software Upgrade

Department:	Utilities
Presenter:	Frank W. Byne, Director
Caption:	Motion to **approve** Change Order to Extend AUD Billing Software Upgrade Go Live date by two months and add CO 1 in the amount of $41,000.00 to Systems & Software – PO #22AUA041**(Approved by Engineering Services Committee February 28, 2023)**
Background:	Commission approved the upgrade of the AUD Billing Software in 2021 and work began in early 2022 with an original projected Go Live of October, 2022. One of the options selected by AUD as part of the agreement was to move the billing software to the cloud with the vendor, as AUD's server was reaching end of life, and nearing full capacity. For a multitude of reasons, the two parties agreed that more time was needed and the new Go Live date was extended to January of 2023 without additional cost to AUD. However, due to issues that were out of the control of the vendor, the timing of the Go Live had to be moved again to the first week of March, 2023. While this process was happening, the current version of the software was having significant performance issues, forcing AUD to engage the vendor to research the issue in order to make sure the software was functioning properly to efficiently serve our customers.
Analysis:	The vendor was asked to spend a significant amount of time trying to help us solve performance issues in the old version that eventually turned out to be overloaded server issues on our end. In addition, extending the Go Live date by two months, mainly due to factors beyond their control, caused them to not only duplicate some steps in the upgrade process but added additional time spent in reallocating their resources, project planning, additional meetings with AUD and other things that AUD feels are reasonable costs associated with their additional time. They also gave us a discounted hourly rate on these additional hours. In the amount of $41,000.00.
Financial Impact:	Total additional cost is $41,000.00
Alternatives:	None. The problems had to be resolved immediately in order to finish the upgrade on time and solve the server issues.
Recommendation:	Approve the Change Order to Extend AUD Billing Software Upgrade Go Live and add an addition $41,000.00 for related cost.
Funds are available in the following accounts:	506043210-5424320

REVIEWED AND APPROVED BY: Steve Little, AD Fin & Admin, Utilities

AUGUSTA - RICHMOND COUNTY
REQUISITION

CHECK ALL THAT APPLY:

FUND# 506 - Operating

DATE: 2/6/2023
Department: Utilities

☐ WATER ☐ ENGINEERING ☑ COMMISSION APPROVAL Date 02/15/2022
☐ SEWER ☐ CONSTRUCTION ☐ ADMINISTRATIVE APPROVAL Date
☑ BOTH ☐ PROFESSIONAL SERVICES ☐ CHANGE ORDER Date

GL#: 506043210 - 5424320
JL#: AUA -

BID ITEM #

VENDOR:	SYSTEMS AND SOFTWARE	VENDOR#13922		
ADDRESS:				
PHONE #:				
QUOTED BY:				

ITEM #	ITEM DESCRIPTION	QUANTITY	UNIT PRICE	TOTAL PRICE	UNIT PRICE	TOTAL PRICE	UNIT PRICE	TOTAL PRICE
1.	UPGRADE OF WEB			0.00		0.00		0.00
2.	SERVICES SOFTWARE			0.00		0.00		0.00
3.	TO CAPRICORN			0.00		0.00		0.00
4.	CO#2 22AUA041			0.00		0.00		0.00
5.	INV#CT000004704			0.00		0.00		0.00
6.	DATED 01/31/2023			0.00		0.00		0.00
7.				0.00		0.00		0.00
8.	506043210-5424320	1	41,000.00	41,000.00		0.00		0.00
9.				0.00		0.00		0.00
10.	APPROVED BY			0.00		0.00		0.00
11.	COMMISSION			0.00		0.00		0.00
12.	02/15/2022 #19			0.00		0.00		0.00
13.	(COPY ATTACHED)			0.00		0.00		0.00
14.				0.00		0.00		0.00
	SHIPPING CHARGES			0.00		0.00		0.00
	TOTAL			41,000.00		0.00		0.00

JUSTIFICATION AND EXPLANATION FOR PURCHASE:

REQUESTED BY: STEVE LITTLE

APPROVED BY: COMMISSION 02/15/2022

Directors Signature:

Rev. 5/2/2013

Systems & Software

Please remit to:
62130 Collections Center Drive
Chicago, IL 60693-0621

Invoice	CT000004704
Date	1/31/2023
Page	1 of 1

Bill To

Augusta Utilities Department
452 Walker St. Suite 200
Augusta, GA 30901
United States

Ship To

Augusta Utilities Department
452 Walker St. Suite 200
Augusta, GA 30901
United States

PO Number	Customer No.	Salesperson ID	Shipping Method	Payment Terms
21UTIO84	AUG100		LOCAL DELIVERY	Receipt

Ordered	Item Number	Description	Unit Price	Ext Price
1.00	CUST DEP - PS	MS14 - CO06 enQuesta v6 and Capricorn upgrade Project Timeline Extension - due on signing	US$ 41,000.00	US$ 41,000.00

Subtotal	US$ 41,000.00
Misc	US$ 0.00
Tax	US$ 0.00
Freight	US$ 0.00
Trade Discount	US$ 0.00
Total	US$ 41,000.00

Invoice Questions? Please call Lisa Ross at 613-226-5511 ext 2192 or email LRoss@harriscomputer.com

Augusta
GEORGIA

Office of the City Administrator

Odie Donald, II MBA
Administrator

February 15, 2022

Mr. Wes Byne
Utilities Director
452 Walker Street
Augusta, GA 30901

Dear Director Byne:

At the regular meeting held Tuesday, February 15, 2022, the Augusta, Georgia Commission took action on the following:

19. Approved upgrade of web services software to Capricorn as Sole Source Procurement. (Approved by Engineering Services Committee February 8, 2022)

If you have any questions, please contact me.

In service,

Odie Donald II
Administrator

AUGUSTA, GEORGIA

PURCHASE ORDER

SUITE 605, PROCUREMENT DEPARTMENT
535 TELFAIR STREET, MUNICIPAL BUILDING 1000
AUGUSTA, GEORGIA 30901-2377
PHONE: (706) 821-2422

Page 1 of 1

DATE	DEPARTMENT	VENDOR PHONE #	PURCHASE ORDER NO.
03/29/22	043210	(802) 655-4400	22AUA041
			REQUISITION/QUOTE NO. R359100

VENDOR #	E-VERIFY #	EMAIL
13922	401203	

PURCHASE ORDER NUMBER ABOVE MUST APPEAR ON ALL INVOICES, SHIPPING PAPERS, AND PACKAGES.

VENDOR
SYSTEMS & SOFTWARE INC
1 ANTARES DRIVE
SUITE 400
OTTAWA, ONTARIO, CN K2E 8C4

ATTN: SOLE SOURCE
BID NUMBER:
CONTRACT #: 22AUA041
BUYER: NANCY

SHIP TO:
AUGUSTA UTILITIES ADMIN
452 WALKER STREET
SUITE 200
AUGUSTA, GA 30901

BILL TO:
AUGUSTA, GEORGIA
ACCOUNTING DEPARTMENT, SUITE 800
535 TELFAIR STREET, MUNICIPAL BUILDING 1000
AUGUSTA, GA 30901-2379
(706) 821-2336

ALL INVOICES AND CORRESPONDENCE MUST BE SENT TO ABOVE ADDRESS REGARDLESS OF SHIPPING DESTINATION.

ITEM #	QUANTITY	UNIT	PRODUCT ID	DESCRIPTION	UNIT PRICE	AMOUNT
0001	1	EACH		UPGRADE OF WEB SERVICES SOFTWARE TO CAPRICORN INV: MN0000002029 CT000004350 CT000004349 CUST AUG100 SIGING 100% LIC50% SVC $70,000 DELIVERY 25% $15,000 GO-LIVE 25% $15,000 MAINTENANCE $20,000 SPLIT FUNDING APPROVED BY COMMISSION 2/15/22, ITEM #19 506-04-3210/54-24320	100,000.00	100,000.00
0002	1	EACH		UPGRADE OF WEB SERVICES SOFTWARE TO CAPRICORN - SPLIT ACCOUNT 506-04-3210/53-19130	20,000.00	20,000.00

APPROVED BY COMMISION
2/15/22, ITEM #19

CONDITIONS - READ CAREFULLY

1. The purchaser is exempt by statue from payment of Federal State and Municipal sales, excise and other taxes
2. Shipping charges prepaid by vendor
3. Payment will be made on complete shipments only unless otherwise requested
4. DELIVERY TICKET MUST ACCOMPANY GOODS.
5. No back orders. We will reorder if available
6. Please make deliveries between 9 A.M. and 4 P.M.
7. All goods received with subsequent privilege to inspect and return at Vendors expense if defective or not in compliance with our specifications
8. Indoor delivery if necessary
9. Payment Net 30 or according to contract

Sent by:
MAR 30 2022
Tess Thompson

REQUISITIONER

NET TOTAL..... 120,000.00

APPROVED FOR ISSUE
G A Sams
PROCUREMENT DIRECTOR

Commission Meeting

March 7, 2023

Greene Street Improvements Project

TIA Project Number: RC07-000117 / PI#0011389

RFP Item: 22-294

File Reference: 23-014(T)

Department: Engineering & Environmental Services

Presenter: Hameed Malik, Director

Caption: Motion to **approve** award of Construction Contract to Reeves Construction subject to Value Engineering and in the amount of $12,198,593.15 for Phase I of the Transportation Investment Act (TIA) Projects, Greene Street Improvements Project-Road Segment 5th St. to East Boundary, subject to receipt of signed contracts and proper bonds. RFP 22-294 / requested by Engineering. **(Approved by Engineering Services Committee February 28, 2023)**

Background: The Greene Street Improvements is a project from the "Approved Investment List" of TIA that was approved by voters of the CSRA in July 31, 2012 referendum. The Greene Street is a Band 3 project. The project improvements consist of improving roadway safety by resurfacing, reconstructing the existing curb and gutter, replacing sidewalks and improving the storm water system. The project will improve pedestrian safety at intersections with new high visibility crosswalks. New street landscaping will be provided, where possible, to enhance pedestrian use and improvement of roadway aesthetics. Project is divided into two Segments; Phase one is 5th Street to East Boundary and other is 13th Street to 5th Street.

Analysis: RFP's were received on November 2, 2022 and were evaluated based on criteria outlined in RFP document. Following contractors submitted proposals.

1. E R Snell Contractor, Inc.

2. Reeves Construction Co

Reeves Construction received the highest score on the evaluation. Engineering Department requested to enter into negotiations with Reeves and has negotiated a fee in the amount of $12,198,593.15 for segment 1.

Financial Impact:	Funds are available in Project TIA funds ($11,184,225.15), Streetlighting ARAP funds ($366,368.00), and TIA-Discretionary ($648,000.00).
Alternatives:	No alternate proposed
Recommendation:	Approve award of Construction Contract to Reeves Construction subject to Value Engineering and in the amount of $12,198,593.15 for Transportation Investment Act (TIA) Projects, Greene Street Improvements Project-Road Segment 5th St. to East Boundary, subject to receipt of signed contracts and proper bonds. RFP 22-294 / requested by Engineering
Funds are available in the following accounts:	($11,184,225.15) 371-041110-54.14110 / T15040117-54.14110 Project TIA Funds; ($366,368) Streetlighting ARPA funds & ($648,000) 235-041110-54.14110 TIA-Discretionary Funds
REVIEWED AND APPROVED BY:	HM/SR

Request for Proposals

Request for Proposals will be received at this office until **Wednesday, November 2, 2022 @ 3:00 p.m. via ZOOM Meeting ID: 816 9364 8227; Passcode: 486928 for furnishing:**

RFP Item #22-294 **Construction Services for Greene Street Improvements (13th St. to East Boundary St.) Project for Augusta, GA – Engineering Department**

RFPs will be received by: The Augusta Commission hereinafter referred to as the OWNER at the offices of:

Geri A. Sams, Director
Augusta Procurement Department
535 Telfair Street - Room 605
Augusta, Georgia 30901

RFP documents may be examined at the office of the Augusta, GA Procurement Department, 535 Telfair Street – Room 605, Augusta, GA 30901 (706-821-2422). Plans and specifications for the project shall be obtained by all prime contractors, subcontractors, and suppliers exclusively from Augusta Blueprint. **The fees for the plans and specifications which are non-refundable are $450.00.**

It is the wish of the Owner that all businesses are given the opportunity to submit on this project. To facilitate this policy the Owner is providing the opportunity to view plans online (www.augustablue.com) at no charge through **Augusta Blueprint (706-722-6488)** beginning **Thursday, September 22, 2022.** Proponents are cautioned that submitting a package without Procurement of a complete set are likely to overlook issues of construction phasing, delivery of goods or services, or coordination with other work that is material to the successful completion of the project. Bidders are cautioned that acquisition of documents through any other source is not advisable. Acquisition of documents from unauthorized sources places the bidder at the risk of receiving incomplete or inaccurate information upon which to base his qualifications.

Pre-Proposal Conference will be held on Monday, October 17, 2022 @ 2:00 p.m. Via Zoom – Meeting ID: 856 6864 7205; Passcode: 877430.

All questions must be submitted in writing by fax to 706 821-2811 or by email to procbidandcontract@augustaga.gov to the office of the Procurement Department by Tuesday, October 18, 2022 @ 5:00 P.M. No RFP will be accepted by fax or email, all must be received by mail or hand delivered.

No RFP may be withdrawn for a period of **90** days after bids have been opened, pending the execution of contract with the successful bidder(s). **A 10% Bid Bond is required. A 100% performance bond and a 100% payment bond will be required for award.**

***Request for proposals (RFP) and specifications*.** An RFP shall be issued by the Procurement Office and shall include specifications prepared in accordance with Article 4 (Product Specifications), and all contractual terms and conditions, applicable to the procurement. **All specific requirements contained in the request for proposal including, but not limited to, the number of copies needed, the timing of the submission, the required financial data, and any other requirements designated by the Procurement Department are considered material conditions of the bid which are not waivable or modifiable by the Procurement Director.** All requests to waive or modify any such material condition shall be submitted through the Procurement Director to the appropriate committee of the Augusta, Georgia Commission for approval by the Augusta, Georgia Commission. Please mark RFP number on the outside of the envelope.

GEORGIA E-Verify and Public Contracts: The Georgia E-Verify law requires contractors and all sub-contractors on Georgia public contract (contracts with a government agency) for the physical performance of services over $2,499 in value to enroll in E-Verify, **regardless of the number of employees**. They may be exempt from this requirement if they have no employees and do not plan to hire employees for the purpose of completing any part of the public contract. Certain professions are also exempt. All requests for proposals issued by a city must include the contractor affidavit as part of the requirement for their bid to be considered.

Proponents are cautioned that acquisition of RFP documents through any source other than the office of the Procurement Department is not advisable. Acquisition of RFP documents from unauthorized sources places the proponent at the risk of receiving incomplete or inaccurate information upon which to base their qualifications.

Correspondence must be submitted via mail, fax or email as follows:

Augusta Procurement Department
Attn: Geri A. Sams, Director of Procurement
535 Telfair Street, Room 605
Augusta, GA 30901
Fax: 706-821-2811 or Email: procbidandcontract@augustaga.gov

GERI A. SAMS, Procurement Director

Publish:

Augusta Chronicle	September 22, 29, 2022 and October 6, 13, 2022
Metro Courier	September 22, 2022

Revised: 3/22/21

RFP Opening - RFP Item #22-294 Construction Services for Greene Street Improvements (13th St. to East Boundary St.) - for Augusta, GA – Engineering Department
RFP Date: Wednesday, November 2, 2022 @ 3:00 p.m.

Total Number Specifications Mailed Out: 2
Total Number Specifications Download (Demandstar): 6
Total Electronic Notifications (Demandstar): 219
Georgia Procurement Registry: 2456
Total packages submitted: 2
Total Noncompliant: 0

VENDORS	Attachment "B"	E-Verify #	SAVE Form	Addendum 1	Original	7 Copies	Fee Proposal	Bond
E. R. Snell Contractor, Inc. 1785 Oak Road Snellville, GA 30078	Yes	22114	Yes	Yes	Yes	Yes	Yes	Yes
Reeves Construction Company 1 APAC Industrial Way Augusta, GA 30907	Yes	667047	Yes	Yes	Yes	Yes	Yes	Yes

RFP Item #RFP Item #22-294
Construction Services for Greene Street Improvements (13th St. to East Boundary St.)
Project for Augusta, GA – Engineering Department
RFP Date: Wednesday, November 2, 2022 @ 3:00 p.m
Evaluation Date: Monday, November 7, 2022 @ 2:00 p.m. via ZOOM

Vendors			ER Snell Contractor Inc 1785 Oak Rd. Snellville, GA 30078	Reeves Construction 1 Apac Industrial Way Augusta, GA 30907	ER Snell Contractor Inc 1785 Oak Rd. Snellville, GA 30078	Reeves Construction 1 Apac Industrial Way Augusta, GA 30907
Phase 1			**Ranking of 0-5 (Enter a number value between 0 and**			
Evaluation Criteria	**Ranking**	**Points**	**Scale 0 (Low) to 5 (High)**		**Weighted Scores**	
1. Completeness of Response • Package submitted by the deadline • Package is complete (includes requested information as required per this solicitation) • Attachment B is complete, signed and notarized	N/A	**Pass/Fail**	**PASS**	**PASS**	**PASS**	**PASS**
2. Qualifications & Experience	(0-5)	**20**	**5.0**	**5.0**	**100.0**	**100.0**
3. Organization & Approach	(0-5)	**10**	**4.5**	**5.0**	**45.0**	**50.0**
4.Scope of Services Roadway construction, storm drainage construction, curb and gutter construction, sidewalk construction, traffic signal modifications and installation, street light installation on these corridors. The contractor shall be able to self- perform majority 50% of the required work.	(0-5)	**25**	**3.5**	**5.0**	**87.5**	**125.0**
5. Schedule of Work	(0-5)	**5**	**4.5**	**5.0**	**22.5**	**25.0**
6. References	(0-5)	**5**	**5.0**	**5.0**	**25.0**	**25.0**
7. Proximity to Area (only choose 1 line according to location of the company - enter the ranking value for the one line only)						
Within Richmond County	5	**10**		**5.0**	**0.0**	**50.0**
Within CSRA	5	**6**			**0.0**	**0.0**
Within Georgia	5	**4**	**5.0**		**20.0**	**0.0**
Within SE United States (includes AL, TN, NC, SC, FL)	5	**2**			**0.0**	**0.0**
• All Others	5	**1**			**0.0**	**0.0**
Phase 1 Total - (Total Maximum Ranking 30 - Maximum Weighted Total Possible 375)			**27.5**	**30.0**	**300.0**	**375.0**
Phase 2 (Option - Numbers 8-9) (Vendors May Not Receive Less Than a 3 Ranking in Any Category to be Considered for Award)						
8. Presentation by Team	(0-5)	**10**			**0.0**	**0.0**
9. Q&A Response to Panel Questions	(0-5)	**5**			**0.0**	**0.0**
10. Cost/Fee Proposal Consideration (only choose 1 line according to dollar value of the proposal in relation to all fee proposals - enter the point value for the one line only)					**Cost/Fee Proposal Consideration**	
Lowest Fees	5	**10**		**5.0**	**0.0**	**50.0**
Second	5	**6**	**5.0**		**30.0**	**0.0**
Third	5	**4**			**0.0**	**0.0**
Forth	5	**2**			**0.0**	**0.0**
Fifth	5	**1**			**0.0**	**0.0**
Total Phase 2 - (Total Maximum Ranking 15 - Maximum Weighted Total Possible 125)			**5.0**	**5.0**	**30.0**	**50.0**
Total (Total Possible Score 500) Total (May not Receive Less Than a 3 Ranking in Any Category						
Total Cumulative Score (Maximum point is 500)			**32.5**	**35.0**	**330.0**	**425.0**

Internal Use Only

Evaluator: Cumulative Date: 11/7/2022

Procurement DepartmentRepresentative:_____Nancy Williams_____

Procurement Department Completion Date: 11/7/2022

Augusta GEORGIA

ENGINEERING & ENVIR. SVCS. DEPARTMENT

Hameed Malik, Ph.D., P.E., Director

MEMORANDUM

TO: Ms. Geri Sams, Director - Procurement

FROM: Hameed Malik, Ph.D., PE, Director- Engineering & Environmental Services

DATE: Monday, December 26, 2022

SUBJECT: TIA PI# 0011389/ Greene Street Improvements Project
for Augusta, GA -Engineering Department
RFP 22-294
File Reference: 22-014(T)

Augusta Engineering is making the following two-part supplemental recommendations for awarding RFP 22-294 - Greene Street Improvements project (Project). Project consists of two segments: i) Segment between 5th Street & East Boundary (Local Road Segment (Segment 1)), and ii) Segment between 13th Street & 5th Street (State Route Segment (Segment 2)).

Segment 1 (5th Street to East Boundary):
Augusta Engineering (AE) is recommending releasing this segment for award to Reeves Construction Company (Reeves) subject to further Value Engineering during construction phase, specifically Traffic Control, Grading Complete, Lighting, and Landscaping items. This segment construction completion duration is 548 calendar days (18 months) from Notice to Proceed (NTP) date. Award recommendation is contingent upon receipt of signed contract, insurance documentation and proper bonds relevant to segment 1 improvements.

Segment 2 (13th Street to 5th Street):
Augusta Engineering (AE) is recommending delaying this segment award until project is rescoped. AE is further recommending rescoping this segment's improvements followed by fee negotiation with Reeves Construction (presently the lowest fee proposer). At completion of these efforts, AE will make its recommendations at completion of these efforts.

In case Reeves opt not to accept award as recommended then Augusta Engineering recommending entering fee negotiation and value engineering with second lowest fee proposer, E R Snell Construction.

Should you require additional information, please do not hesitate to contact me at (706)796-5040.

Thank you.

/hm
cc: Darrell White & Nancy Williams, Procurement Department
Compliance Department
John Ussery & June Hamal, Augusta Engineering
Program File

Augusta GEORGIA

ENGINEERING & ENVIR. SVCS. DEPARTMENT

Hameed Malik, Ph.D., P.E., Director

MEMORANDUM

TO: Ms. Geri Sams, Director - Procurement

FROM: Hameed Malik, Ph.D., PE, Director- Engineering

DATE: Monday, December 26, 2022

SUBJECT: Greene Street Improvements Project
for Augusta, GA -Engineering Department
Cost Variance Justification
GDOT PI# 0011389
RFP 22-294
File Reference: 22-014(T)

Ms Sams, this memo is to render a justification for cost variance between the "Estimated Cost" and the received Fee Proposal reference the subject project. This project construction consists of road reconstruction, storm sewer, sidewalks, streetlighting, landscaping and traffic operation improvements. Received lowest fee amount is $36,419,053.95. Fee was subject to value engineering (VE) and negotiation that yielded final fee amount $31,527,619.78. Augusta Engineering initial estimated cost was around $25,251,928 and revised estimate is $29,625,273.77. Internal Estimate was adjusted due to current construction market several uncontrolled variables such as significant increase in material production cost, severe shortage of skilled workforce and significant increase in construction work at present. Accordingly, responsible bidders are adjusting unit process and are not offering similar work last few years pricing. In addition, that is the reason only two (2) fee proposals received.

There is variance of around 6% between received VE fee and adjusted Internal Estimate. In our professional opinion, noted cost variance is acceptable due to current construction market uncertainty. Hence, it is Augusta Engineering recommendation to accept received fee with further VE consideration during construction.

Thank you.

/:*hm*

cc: Darrell White & Nancy Williams, Procurement Department
John Ussery,PE., AE Assistant Director-Traffic Engineering
June Hamal, AE Associate Director Construction & Program Delivery
Program File

Augusta Engineering Administration
452 Walker Street, Suite 110 – Augusta, GA 30901
Office: (706) 796 – 5040 Fax: (706) 796 -5045
www.augustaga.gov

GREENE STREET IMPROVEMENTS

5th Street To East Boundary

ITEM	ITEM NO.	DESCRIPTION	QTY	UNIT	NEGOTIATION 01/19/2023 REEVES QTY	UNIT PRICE	TOTAL
		FORCE ACCOUNT	1	LS	1	$400,000.00	$400,000.00
1	150-1000	TRAFFIC CONTROL - 0011409	1	LS	1	$492,735.00	$492,735.00
2	207-0203	FOUND BKFILL MATL, TP II	5500	CY	5500	$82.00	$451,000.00
3	210-0100	GRADING COMPLETE - 0011409	1	LS	1	$3,710,560.00	$3,710,560.00
		DEMO SIDEWALK		SY	0	$0.00	$0.00
4	213-1000	LOCAL SAND OR SAND-GRAVEL BACKFILL	2170	CY	0	$0.00	$0.00
5	310-1101	GR AGGR BASE CRS, INCL MATL	2800	TN	2800	$74.40	$208,320.00
6	402-1801	RECYCLED ASPH CONC 12.5 MM SUPERPAVE, GP 2 ONLY, INCL BITUM MATL & H LIME	80	TN	80	$250.00	$20,000.00
7	402-1812	RECYCLED ASPH CONC LEVELING, INCL BITUM MATL & H LIME	496	TN	496	$155.00	$76,880.00
8	402-3130	RECYCLED ASPH CONC 12.5 MM SUPERPAVE, GP 2 ONLY, INCL BITUM MATL & H LIME	2450	TN	2450	$147.00	$360,150.00
9	413-0750	TACK COAT	1450	GL	1450	$4.00	$5,800.00
10	432-0206	MILL ASPH CONC PVMT, 1 1/2 IN DEPTH	28900	SY	28900	$4.40	$127,160.00
11	441-0104	CONC SIDEWALK, 4 IN	8600	SY	9184	$55.00	$505,120.00
12	441-3999	CONCRETE GUTTER, 6 IN	1000	LF	1000	$23.00	$23,000.00
13	441-4040	CONC VALLEY GUTTER WITH CURB, 6 IN	3200	SY	3200	$65.00	$208,000.00
14	441-6012	CONC CURB & GUTTER, 6 IN X 24 IN, TP 2	350	LF	350	$34.00	$11,900.00
15	441-6022	CONC CURB & GUTTER, 6 IN X 30 IN, TP 2	15000	LF	15000	$37.00	$555,000.00
16	500-3101	CLASS A CONCRETE	40	CY	40	$600.00	$24,000.00
17	500-9999	CLASS B CONC, BASE OR PVMT WIDENING	500	CY	500	$275.00	$137,500.00
18	611-5280	RESET GRANITE CURB	1000	LF	0	$0.00	$0.00
	611-5360	RESET HIGHWAY SIGN	41	EA	41	$250.00	$10,250.00
		THERMO XD ON CONCRETE			33955	$20.00	$679,100.00
		THERMO XD ON ROADWAY			4125	$20.00	$82,500.00
19	900-0039	BRICK PAVERS	40000	SF	0	$0.00	$0.00
20	900-0040	BRICK PAVERS (RESET)	12918	SF	0	$0.00	$0.00
		ROADWAY					**$8,088,975.00**
22	550-1180	STORM DRAIN PIPE, 18 IN, H 1-10	3202	LF	3202	$106.00	$339,412.00
23	550-1240	STORM DRAIN PIPE, 24 IN, H 1-10	2747	LF	2747	$127.00	$348,869.00
24	550-1300	STORM DRAIN PIPE, 30 IN, H 1-10	324	LF	324	$156.00	$50,544.00
	550-1360	STORM DRAIN PIPE, 36 IN, H 1-10	186	LF	186	$190.00	$35,340.00
25	573-2006	UNDDR PIPE INCL DRAINAGE AGGR, 6 IN	400	LF	400	$45.00	$18,000.00
	550-2999	PIPE ARCH, 36IN X 28IN, CLASS III	163	LF	163	$280.00	$45,640.00
26	600-0001	FLOWABLE FILL	60	CY	60	$400.00	$24,000.00
27	611-3000	RECONSTR CATCH BASIN, GROUP 1	5	EA	5	$7,600.00	$38,000.00
28	611-3030	RECONSTR STORM SEW MANHOLE, TYPE 1	1	EA	1	$4,400.00	$4,400.00
29	611-8050	ADJUST MANHOLE TO GRADE	10	EA	10	$900.00	$9,000.00
	660-0001	SEWER PIPE, VARIOUS SIZES, PVC	100	LF	100	$225.00	$22,500.00
31	668-1100	CATCH BASIN, GP 1	72	EA	72	$7,650.00	$550,800.00

32	668-1110	CATCH BASIN, GP 1, ADDL DEPTH	4	LF	4	$725.00	$2,900.00
35	668-2100	DROP INLET, GP 1	4	EA	4	$5,600.00	$22,400.00
36	668-4300	STORM SEWER MANHOLE, TP 1	35	EA	35	$5,600.00	$196,000.00
50	668-4301	STORM SEWER MANHOLE, TP 1, UTILITY CONFLICT BOX	1	EA	1	$5,600.00	$5,600.00
37	668-4311	STORM SEWER MANHOLE, TP 1, ADDL DEPTH, CL 1	7	LF	7	$720.00	$5,040.00
	668-4312	STORM SEWER MANHOLE, TP 1, ADDL DEPTH, CL 2	5	LF	5	$720.00	$3,600.00
41	668-7001	YARD DRAIN INLET, VARIOUS SIZES	10	EA	10	$5,600.00	$56,000.00
		DRAINAGE					**$1,778,045.00**
		CLASS A CONCRETE BASE			36	$4,000.00	$144,000.00
	680-4110	LIGHTING STD, 12FT MH, POST TOP	255	EA	0	$3,200.00	$0.00
	682-1306	CABLE, TP THHN STRANDED COPPER, AWG NO 6, ALL WIRE MUST BE STRANDED	148020	LF	0	$3.25	$0.00
80	682-2110	ELECTRICAL SERVICE POINT	5	EA	3	$11,000.00	$33,000.00
	682-6221	CONDUIT, NONMETAL, TP 2, 1 1/2 IN	37005	LF	12,600.00	$12.08	$152,208.00
	682-9020	ELECTRICAL JUNCTION BOX	65	EA	36	$900.00	$32,400.00
	682-9950	DIRECTIONAL BORE - 3 IN	885	LF	425	$11.20	$4,760.00
		LIGHTING					**$366,368.00**
58	636-1033	HIGHWAY SIGNS, TP 1 MATL, REFL SHEETING, TP 9	151	SF	151	$24.00	$3,624.00
59	636-1036	HIGHWAY SIGNS, TP 1 MATL, REFL SHEETING, TP 11	248	SF	248	$26.00	$6,448.00
60	636-2070	GALV STEEL POSTS, TP 7	896	LF	896	$12.00	$10,752.00
64	653-0120	THERMOPLASTIC PVMT MARKING, ARROW, TP 2	10	EA	10	$100.00	$1,000.00
66	653-0210	THERMOPLASTIC PVMT MARKING, WORD, TP 1	2	EA	2	$200.00	$400.00
68	653-1704	THERMOPLASTIC SOLID TRAF STRIPE, 24 IN, WHITE	499	LF	499	$12.00	$5,988.00
	653-1804	THERMOPLASTIC SOLID TRAF STRIPE, 24 IN, WHITE	5065	LF	5065	$4.00	$20,260.00
69	653-2501	THERMOPLASTIC SOLID TRAF STRIPE, 5 IN, WHITE	2.2	LM	2.2	$3,000.00	$6,600.00
70	653-4501	THERMOPLASTIC SKIP TRAF STRIPE, 5 IN, WHITE	1.2	GLM	1.2	$1,950.00	$2,340.00
71	653-6004	THERMOPLASTIC TRAF STRIPING, WHITE	312	SY	312	$6.90	$2,152.80
73	654-1003	RAISED PVMT MARKERS TP 3	181	EA	181	$6.90	$1,248.90
		SIGNING, MARKING AND SIGNAL					**$60,813.70**
	636-1041	HIGHWAY SIGNS, TP 2 MATL, REFL SHEETING, TP 9	42	SF	42	$73.00	$3,066.00
	682-2140	PULL BOX ASSEMBLY, TYPE 4	1	EA	1	$1,300.00	$1,300.00
	639-3004	STEEL STRAIN POLE, TP IV, W/35 FT MAST ARM	1	EA	1	$24,500.00	$24,500.00
	639-3004	STEEL STRAIN POLE, TP IV, W/60 FT & 60 FT MAST ARMS	1	EA	1	$60,000.00	$60,000.00
	647-1000	TRAFFIC SIGNAL INSTALLATION NO. 1	1	LS	1	$215,000.00	$215,000.00
	647-1030	RRFB INSTALLATION NO-1	1	LS	1	$10,000.00	$10,000.00
	647-1030	RRFB INSTALLATION NO-2	1	LS	1	$10,000.00	$10,000.00
	647-1030	RRFB INSTALLATION NO-3	1	LS	1	$10,000.00	$10,000.00
	647-1030	RRFB INSTALLATION NO-4	1	LS	1	$10,000.00	$10,000.00
	647-1300	EMERGENCY VEHICLE PREEMPTION (EMTRAC S7-9252 PRIORITY DETECTOR)	1	EA	1	$15,000.00	$15,000.00
	682-6233	CONDUIT, NONMETL, TP 3, 2 IN	1475	LF	1475	$13.50	$19,912.50
	682-9950	DIRECTIONAL BORE, 3 IN	1075	LF	1075	$10.95	$11,771.25
	682-9950	DIRECTIONAL BORE, 5 IN	100	LF	100	$14.50	$1,450.00
	935-1117	OUTSIDE PLANT FIBER OPTIC CABLE, LOOSE TUBE, SINGLE MODE, 96 FIBER	1100	LF	1100	$9.00	$9,900.00
	935-1511	OUTSIDE PLANT FIBER OPTIC CABLE, DROP, SINGLE MODE, 6 FIBER	110	LF	110	$10.00	$1,100.00

	935-3107	FIBER OPTIC CLOSURE, UNDERGROUND, 96 FIBER	1	EA	1	$1,050.00	$1,050.00
	935-3402	FIBER OPTIC CLOSURE, FDC (RACK MOUNTED), 12 FIBER	1	EA	1	$1,300.00	$1,300.00
	935-4010	FIBER OPTIC SPLICE, FUSION	12	EA	12	$170.00	$2,040.00
	935-5050	FIBER OPTIC PATCH CORD SM ST/LC	2	EA	2	$130.00	$260.00
	937-6050	ITERIS VANTAGE NEXT PLATFORM WITH VINTAGE VECTOR	1	EA	1	$33,000.00	$33,000.00
	939-2300	FIELD SWITCH TYPE A (Cisco Catalyst 1E-3200-8T2S-E and Cisco Power-1E-3000-ac power supply) Switch and power supply shall be din rail mounted)	1	EA	1	$6,400.00	$6,400.00
	939-2237	GBIC TYPE D	2	EA	2	$180.00	$360.00
	936-4000	CCTV CAMERA SYSTEM, TYPE 1 (AXIS Q6075-E)	1	EA	1	$7,500.00	$7,500.00
		SIGNAL					**$454,909.75**
	318-3000	AGG SURF CRS	50	TN	50	$90.00	$4,500.00
93	702-0044	ALLIUM X 'MILLENIUM' - MILLENIUM ORNAMENTAL ONION	701	EA	701	$4.50	$3,154.50
94	702-0063	AZALEA X 'GEORGE L TABER' - GEORGE L. TABER SOUTHERN INDICA AZALEA	100	EA	100	$21.00	$2,100.00
95	702-0063	AZALEA X 'MARTHA HITCHCOCK' - MARTHA HITCHCOCK AZALEA	104	EA	104	$27.00	$2,808.00
96	702-0063	AZALEA X 'PRIDE OF MOBILE' - PRIDE OF MOBILE SOUTHERN INDICA AZALEA	26	EA	26	$27.00	$702.00
97	702-0178	COREOPSIS LANCEOLATA - LANCELEAF TICKSEED	2626	EA	2626	$5.25	$13,786.50
98	702-0195	CYNODON DACTYLON 'TIF 419' - TIF 419 BERMUDA GRASS - SOD	13025	SY	13025	$6.00	$78,150.00
99	702-0236	DISTYLIUM X 'VINTAGE JADE' - VINTAGE JADE DISTYLIUM	341	EA	341	$33.00	$11,253.00
100	702-0283	LAGERSTROEMIA INDICA X FAURIEI 'NATCHEZ' - NATCHEZ CRAPE MYRTLE	6	EA	6	$200.00	$1,200.00
101	702-0363	ILEX CORNUTA 'CARISSA' - CARISSA CHINESE HOLLY	110	EA	110	$21.00	$2,310.00
104	702-0529	LAGERSTROEMIA INDICA X FAURIEI 'SIOUX' - SIOUX CRAPE MYRTLE	4	EA	4	$200.00	$800.00
105	702-0559	LIRIOPE MUSCARI 'DENSIFLORA' - DENSIFLORA LILYTURF	5255	EA	5255	$5.50	$28,902.50
107	702-0678	MUHLENBERGIA CAPILLARIS - PINK MUHLY GRASS	226	EA	226	$23.00	$5,198.00
108	702-0682	NARCISSUS MINOR - DAFFODIL	10064	EA	10064	$2.00	$20,128.00
109	702-0700	NYSSA SYLVATICA 'WILDFIRE' - WILDFIRE TUPELO	14	EA	14	$700.00	$9,800.00
110	702-0897	QUERCUS NUTTALII - NUTTALL OAK	27	EA	27	$525.00	$14,175.00
111	702-0905	QUERCUS PHELLOS - WILLOW OAK	22	EA	22	$550.00	$12,100.00
112	702-1081	ULMUS AMERICANA 'JEFFERSON' - JEFFERSON AMERICAN ELM	11	EA	11	$700.00	$7,700.00
113	766-7020	IRRIGATION SYSTEM	1	LS	1	$455,000.00	$455,000.00
		LANDSCAPING					**$673,767.50**
81	163-0232	TEMPORARY GRASSING	4	AC	4	$1,800.00	$7,200.00
82	163-0240	MULCH	8	TN	8	$800.00	$6,400.00
83	163-0550	CONSTRUCT AND REMOVE INLET SEDIMENT TRAP	141	EA	141	$200.00	$28,200.00
84	165-0010	MAINTENANCE OF TEMPORARY SILT FENCE, TP A	3122	LF	3122	$1.00	$3,122.00
85	165-0105	MAINTENANCE OF INLET SEDIMENT TRAP	141	EA	141	$190.00	$26,790.00
86	167-1000	WATER QUALITY MONITORING AND SAMPLING	2	EA	0	$0.00	$0.00
87	167-1500	WATER QUALITY INSPECTIONS	12	MO	12	$500.00	$6,000.00
88	171-0010	TEMPORARY SILT FENCE, TYPE A	3122	LF	3122	$4.10	$12,800.20
89	603-7000	PLASTIC FILTER FABRIC	261	SY	261	$2.00	$522.00
90	643-8200	BARRIER FENCE (ORANGE), 4 FT	1500	LF	1500	$2.00	$3,000.00
91	700-7000	AGRICULTURAL LIME	8	TN	8	$350.00	$2,800.00
92	700-8000	FERTILIZER MIXED GRADE	0.8	TN	0.8	$1,100.00	$880.00
		EROSION CONTROL					**$97,714.20**

42	611-8050	ADJUST MANHOLE TO GRADE - SAN SEWER	9	EA	9	$900.00	$8,100.00
43	611-8120	ADJUST WATER METER BOX TO GRADE	90	EA	90	$675.00	$60,750.00
44	611-8140	ADJUST WATER VALVE BOX TO GRADE	31	EA	31	$850.00	$26,350.00
45	611-8150	ADJUST SEWER LATERAL CLEANOUT TO GRADE	12	EA	12	$750.00	$9,000.00
46	660-1150	CUT & PLUG EXISTING SEWER MAIN	2	EA	2	$1,100.00	$2,200.00
47	660-2045	UTILITY CONFLICT ADJUSTMENT - SEWER MAIN, PVC (8 IN TO 15 IN)	30	LF	30	$225.00	$6,750.00
48	660-2050	UTILITY CONFLICT ADJUSTMENT - SEWER LATERAL (ALL SIZES)	500	LF	500	$170.00	$85,000.00
51	670-2060	GATE VALVE, 6 IN	8	EA	8	$2,200.00	$17,600.00
52	670-3066	TAPPING SLEEVE & VALVE ASSEMBLY, 6 IN X 6 IN	8	EA	8	$32,500.00	$260,000.00
53	670-4000	FIRE HYDRANT ASSEMBLY, INCL TAPPING SLEEVE & VALVE	8	EA	8	$11,250.00	$90,000.00
54	670-5000	UTILITY CONFLICT ADJUSTMENT - WATER MAIN (6 IN TO 8 IN)	540	LF	540	$200.00	$108,000.00
55	670-9730	RELOCATE BACKFLOW PREVENTIN ASSEMBLY	3	EA	3	$750.00	$2,250.00
56	670-9731	RELOCATE EXIST WATER VALVE, INCL BOX	1	EA	1	$2,000.00	$2,000.00
		UTILITY					**$678,000.00**
							$12,198,593.15

FYI: Process Regarding Request for Proposals

Sec. 1-10-51. Request for proposals.

Request for proposals shall be handled in the same manner as the bid process as described above for solicitation and awarding of contracts for goods or services with the following exceptions:

(a) Only the names of the vendors making offers shall be disclosed at the proposal opening.

(b) Content of the proposals submitted by competing persons shall not be disclosed during the process of the negotiations.

(c) Proposals shall be open for public inspection only after the award is made.

(d) Proprietary or confidential information, marked as such in each proposal, shall not be disclosed without the written consent of the offeror.

(e) Discussions may be conducted with responsible persons submitting a proposal determined to have a reasonable chance of being selected for the award. These discussions may be held for the purpose of clarification to assure a full understanding of the solicitation requirement and responsiveness thereto.

(f) Revisions may be permitted after submissions and prior to award for the purpose of obtaining the best and final offers.

(g) In conducting discussions with the persons submitting the proposals, there shall be no disclosure of any information derived from the other persons submitting proposals.

Sec. 1-10-52. Sealed proposals.

(a) *Conditions for use*. In accordance with O.C.G.A. § 36-91-21(c)(1)(C), the competitive sealed proposals method may be utilized when it is determined in writing to be the most advantageous to Augusta, Georgia, taking into consideration the evaluation factors set forth in the request for proposals. The evaluation factors in the request for proposals shall be the basis on which the award decision is made when the sealed proposal method is used. Augusta, Georgia is not restricted from using alternative procurement methods for

obtaining the best value on any procurement, such as Construction Management at Risk, Design/Build, etc.

(b) *Request for proposals*. Competitive sealed proposals shall be solicited through a request for proposals (RFP).

(c) *Public notice*. Adequate public notice of the request for proposals shall be given in the same manner as provided in section 1-10- 50(c)(Public Notice and Bidder's List); provided the normal period of time between notice and receipt of proposals minimally shall be fifteen (15) calendar days.

(d) *Pre-proposal conference*. A pre-proposal conference may be scheduled at least five (5) days prior to the date set for receipt of proposals, and notice shall be handled in a manner similar to section 1-10-50(c)-Public Notice and Bidder's List. No information provided at such pre-proposal conference shall be binding upon Augusta, Georgia unless provided in writing to all offerors.

(e) *Receipt of proposals*. Proposals will be received at the time and place designated in the request for proposals, complete with bidder qualification and technical information. No late proposals shall be accepted. Price information shall be separated from the proposal in a sealed envelope and opened only after the proposals have been reviewed and ranked.

The names of the offerors will be identified at the proposal acceptance; however, no proposal will be handled so as to permit disclosure of the detailed contents of the response until after award of contract. A record of all responses shall be prepared and maintained for the files and audit purposes.

(f) *Public inspection*. The responses will be open for public inspection only after contract award. Proprietary or confidential information marked as such in each proposal will not be disclosed without written consent of the offeror.

(g) *Evaluation and selection*. The request for proposals shall state the relative importance of price and other evaluation factors that will be used in the context of proposal evaluation and contract award. (Pricing proposals will not be opened until the proposals have been reviewed and ranked). Such evaluation factors may include, but not be limited to:

(1) The ability, capacity, and skill of the offeror to perform the contract or

provide the services required;

(2) The capability of the offeror to perform the contract or provide the service promptly or within the time specified, without delay or interference;

(3) The character, integrity, reputation, judgment, experience, and efficiency of the offeror;

(4) The quality of performance on previous contracts;

(5) The previous and existing compliance by the offeror with laws and ordinances relating to the contract or services;

(6) The sufficiency of the financial resources of the offeror relating to his ability to perform the contract;

(7) The quality, availability, and adaptability of the supplies or services to the particular use required; and

(8) Price.

(h) *Selection committee*. A selection committee, minimally consisting of representatives of the procurement office, the using agency, and the Administrator's office or his designee shall convene for the purpose of evaluating the proposals.

(i) *Preliminary negotiations*. Discussions with the offerors and technical revisions to the proposals may occur. Discussions may be conducted with the responsible offerors who submit proposals for the purpose of clarification and to assure full understanding of, and conformance to, the solicitation requirements. Offerors shall be accorded fair and equal treatment with respect to any opportunity for discussions and revision of proposals and such revisions may be permitted after submission and prior to award for the purpose of obtaining best and final offers. In conducting discussions, there shall be no disclosure of information derived from proposals submitted by competing offerors.

(j) From the date proposals are received by the Procurement Director through the date of contract award, no offeror shall make any substitutions, deletions,

additions or other changes in the configuration or structure of the offeror's teams or members of the offeror's team.

(k) *Final negotiations and letting the contract.* The Committee shall rank the technical proposals, open and consider the pricing proposals submitted by each offeror. Award shall be made or recommended for award through the Augusta, Georgia Administrator, to the most responsible and responsive offeror whose proposal is determined to be the most advantageous to Augusta, Georgia, taking into consideration price and the evaluation factors set forth in the request for proposals. No other factors or criteria shall be used in the evaluation. The contract file shall contain a written report of the basis on which the award is made/recommended. The contract shall be awarded or let in accordance with the procedures set forth in this Section and the other applicable sections of this chapter.

Augusta Blueprint

#22-294 Construction Services for Greene Street Improvements (13th St to Boundary St) for Augusta, Georgia Engineering Dept

Planholders List

Set #	Received By	Delivered	Shipped	Picked-Up /Email	Address	Phone	Fax #
1	Reeves Construction Company			X	ghamilton@reevescc.com	770-702-6346	
2	E.R, Snell Contractor, Inc.			X	kpollard@ersnell.com	770-985-0600	

KIEWIT INFRASTRUCTURE
SOUTH CO.
450 DIVIDEND DRIVE
PEACHTREE CITY, GA 30269

ATTN BARRETT BOWDEN
CONTRACT MANAGEMENT INC
1829 KILLINGSWORTH
AUGUSTA GA 30904

ATTN: DAVID WHEATLEY
COLUMBIA DIVERSIFIED INC.
6677 EUBANKS DRIVE
APPLING, GA 30802

SUMMERS CONCRETE
CONTRACTING, INC.
5538 COPPAGE ROAD
HAHIRA, GA 31632

CAROLINA PAVEMENT
209 DEVONHALL LANE
CARY, NC 27518

BLAIR CONSTRUCTION
PO BOX 770
EVANS, GA 30809

C.W. MATTHEWS CONTRACTING
1600 KENVIEW DRIVE
MARIETTA, GA 30060

J & H GRADING & PAVING
1579 EDGEFIELD HIGHWAY
AIKEN, SC 29801

HORIZON CONSTRUCTION
PO BOX 798
EVANS, GA 30809

PAVEWAY OF AUGUSTA/AIKEN
306 SILVER BLUFF RD.
AIKEN, SC 29803

J&B CONSTRUCTION & SRVC
INC
3550 GORDON HIGHWAY
GROVETOWN GA 30813

BEAM'S CONTRACTING
15030 ATOMIC ROAD
BEECH ISLAND, SC 29842

SITEC
ATTN; DAVID MCGHEE
522 RAILROAD AVE
NORTH AUGUSTA, SC 29841

REEVES CONSTRUCTION
ATTN: GREG HAMILTON
1 APAC INDUSTRIAL WAY
AUGUSTA, GA 30907

JHC CORPORATION
1029 PEACHTREE CITY N #359
PEACHTREE CITY, GA 30269

WINSAY CONSTRUCTION INC.
6499 CARRIAGE LN
HARLEM, GA 30814

ER SNELL CONTRACTOR
1785 OAK ROAD
SNELLVILLE, GA 30078

C&H PAVING
204 MAIN STREET
THOMSON, GA 30824

ATC SITE CONSTRUCTION
614 BRIGHAM ROAD
NORTH AUGUSTA, SC 29841

SACK CO
3302 ZELL MILLER PARKWAY
STATESBORO, GA 30458

GRIFFIN CONTRACTING
ATTN: TROY DAVIS
122 PIPEMAKERS CIR.,
SUITE 207
POOLER, GA 31322

JUNE HAMAL
ENGINEERING DEPARTMENT

HAMEED MALIK
ENGINEERING DEPARTMENT

PHYLLIS JOHNSON
COMPLIANCE

RFP ITEM #22-294
CONSTRUCTION SERVICES FOR GREENE STREET IMPROVEMENTS(13TH ST. TO E. BOUNDARY ST.) FOR AUGUSTA, GA – ENGINEERING DEPARTMENT
DUE: WED., NOVEMBER 2, 2022 @ 3:00 P.M.

RFP Item #22-294
CONSTRUCTION SERVICES FOR GREENE STREET IMPROVEMENTS(13TH ST. TO E. BOUNDARY ST.) FOR AUGUSTA, GA – ENGINEERING DEPARTMENT
MAIL:

2022-09-23	p. .ee, vanessa		
parteevanessa 2022-09-23	vanessapartee@yahoo.com partee, vanessa	N	NOM
rand construction corporation 2022-09-23	agriffin@randcc.com Griffin, Anna	N	NOM
reams enterprises inc 2022-09-23	ahamilton@reamsenterprises.com Hamilton, Alfred	N	NOM
rohadfox Construction Control Services C 2022-09-23	debra.james@rccsc.net James, Debra	Y	AFA
rohadfox Construction Control Services C 2022-09-23	rccsc@rccsc.net Rohadfox, Rebekah J.		
sacyr construccion sa 2022-09-23	jcaparros@sacyr.com Caparros, Jose Maria	N	NOM
sacyr construccion sa 2022-09-23	stique@sacyr.com Tique, Sandra		
sinc electrical 2022-09-23	lee@sincelectrical.com knight, lee	N	NOM
sinc electrical 2022-09-23	scott@sincelectrica.com key, Joey		
space managementcapi 2022-09-23	dnemec@spaceplan.gatech.edu space management, capital planning	N	NOM
stanley gray 2022-09-23	stanley.gray@dnr.ga.gov gray, stanley	N	NOM
synergy consultants 2022-09-23	gadobson@synergyconsultants.biz Dobson, George	N	NOM

ETHNIC GROUP	COUNT
African American	365
Asian American	26
Native American	16
Hispanic/Latino	30
Pacific Island/American	2
Non Minority	1089
Not Classified	0
Total Number of Vendors	1528
Total Number of Contacts	2456

PR_bid_email_list

Commission Meeting

March 7, 2023

Engineering Services for Drainage Study, Stormwater System Assessment and Drainage Improvement Projects – RFQ 19-148

Cranston Engineering – Task Order Three

File Reference: 23 – 014(A)

Department: Engineering & Environmental Services

Presenter: Hameed Malik, Director

Caption: Motion to **approve** Task Order funding for Stormwater System Assessment and Drainage Improvements Engineering Services Agreement to Cranston Engineering (Cranston) in the amount of $33,150.00 for John C Calhoun/Ellis Street Drainage Conveyance System Improvements Final Design & Construction plans. Requested by the Engineering. RFQ 19-148 **(Approved by Engineering Services Committee February 28, 2023)**

Background: Stormwater conveyance concerns are wide spread and particularly in older developed areas. The objective of Drainage Improvements projects in areas experiencing localized flooding is to provide infrastructure improvements that mitigate the flooding conditions in these areas. Frequent, severe flooding creates threatening and hazardous conditions for residents of the area, impact local commercial operation and businesses. Contributing factors to the flooding conditions include undersized drainage conveyance system, limited or no roadside curbing, restricted access for system maintenance and deficient integrated storm conveyance system. On May 7, 2019 Commission approved award of the Engineering Services for Drainage Study, Stormwater System Assessment and Drainage Improvement Projects Engineering Services Agreement to four qualified firms including Cranston. Work is released as Phased Task Order. Captioned Task Order covers completion of engineering and construction plan for drainage conveyance system improvements along John C Calhoun Ellis Street on-ramp location.

Analysis: It is continuity of ongoing assessment being conducted by Cranston. System improvements and capacity evaluation initial assessment is complete. Approval of this Task Order is needed for competing final phases of the engineering and construction plans preparation.

Financial Impact: Funds are available in amount of $33,150.00 in Stormwater Utility Funds.

Alternatives: 1). Do not approve and find alternative to complete needed work.

Recommendation:	Approve Task Order funding for Stormwater System Assessment and Drainage Improvements Engineering Services Agreement to Cranston Engineering (Cranston) in the amount of $33,150.00 for John C Calhoun/Ellis Street Drainage Conveyance System Improvements Final Design & Construction plans. Requested by the Engineering. RFQ 19-148.
Funds are available in the following accounts:	($33,150) 581-044320-52.11120 - Stormwater Utility Funds
REVIEWED AND APPROVED BY:	HM/SR

CRANSTON
ENGINEERS - PLANNERS - SURVEYORS
452 Ellis Street, Augusta, Georgia 30901
P.O. Box 2546, Augusta, Georgia 30903
706.722.1588
CranstonEngineering.com

November 19, 2022

Hameed Malik, Ph.D., P.E.
Director of Engineering
Augusta Engineering Department
452 Walker St. Suite 110
Augusta, GA 30901

Re: Ellis Street Drainage Improvements
Augusta-Richmond County, Georgia
Our File No. 2022-0539

Dear Dr. Malik:

In accordance with your request, we are pleased to offer the following proposal for engineering design services for the Ellis Street Drainage Improvements project in Augusta, Georgia. The approximate limits of the project area are shown on the attached exhibit. The following project description and scope, as we understand them, are based upon information provided by you during our recent discussion.

PROJECT DESCRIPTION:

The City of Augusta has received complaints relating to recurring flooding within properties located on Ellis Street between Eve Street and Metcalf Street. On August 15, 2022, Cranston visited the area and documented our observations of the existing conditions. This information was provided to you by email on August 16, 2022. Subsequently, Cranston completed an Engineering Study of the project area and documented our findings in an Engineering Report dated November 2, 2022. The report recommended infrastructure upgrades that will improve the collection and conveyance of runoff within the project area.

This proposal outlines the engineering services associated with the development of construction drawings for the recommended infrastructure improvements.

SCOPE OF WORK:

Work under this proposal involves the design of infrastructure improvements in the project area as shown in the attached exhibit. A topographic and utility survey is included in the scope of work.

Cranston will prepare construction drawings for roadway and drainage improvements in the project area. The proposed drainage improvements will be designed to the 25-year storm event. Calculations for the 2-100 year storm events will be completed and documented. We will submit final drawings to the City of Augusta along with a bid schedule and construction cost estimate. Specifications will be included in the drawings and will reference the City of Augusta, Georgia and Georgia Department of Transportation standards and specifications. Subject to your final review comments, we will furnish "issued for construction" drawings.

Drawings will be prepared in ink at an appropriate scale. Portions of the site plan may need to be enlarged and sectional drawings may be needed to show sufficient detail. The site plan sheets will be accomplished using computer assisted design and drafting (CADD) equipment, and these will be available in AutoCAD Civil 3D computer disc format, if desired, at no additional fee. In the event of difference between the CADD drawings and the original tracing, the hard copy tracing will govern.

We propose our services based on the flowing tasks:

Basic Services

Task 1: **Survey Services** - Perform utility location services and topographic/feature survey of the proposed improvement area as indicated on the attached Exhibit. The contour interval will be one foot and will be based upon the North American Vertical Datum of 1988, commonly called Mean Sea Level. The horizontal datum will be the Georgia State Plane Coordinate System, East Zone (North American Datum of 1983).

Task 2: **Final Engineering Design (100%) and Permitting** - Prepare (100%) Construction Drawings including Erosion & Sediment Control Plans (ESPC) with notes and details. Coordinate Augusta Engineering Department and Georgia Department of Transportation (GDOT) permit applications and review process.

At your request, we can assist with the development of easement maps, NPDES inspections and reporting, the bid process, and construction administration. An estimated fee is included in the additional services for the following:

Additional Services

Task 3: **Easement Maps –** Prepare recordable drawings illustrating easements required for construction or permanent maintenance. Easement maps will be signed by a registered land surveyor in the State of Georgia.

Task 4: **NPDES Monitoring and Inspections** – Complete routine weekly Erosion, Sedimentation and Pollution Control inspections and reporting for NPDES record keeping. Provide post-rainfall event Erosion, Sedimentation and Pollution Control inspections and reporting for NPDES record keeping. Turbidity sampling and reporting after qualifying rainfall events for NPDES record keeping.

Task 5: **Bidding Assistance** – Attend pre-bid meeting, respond to Requests for Information, and issue addenda as necessary.

Task 6: **Construction Administration** – Attend pre-construction meeting, contractor submittal reviews, attend bi-weekly meetings during site construction activities, periodic site observations (4 maximum), review applications for payment, and attend final inspection and punch list walkthrough. We estimate the construction phase will require 3 months, which is the duration of which our construction administration services are based.

ASSUMPTIONS:

1. A Land Disturbance Permit and GDOT Permit are the only permits necessary for this project.
2. Coordination with GDOT will be required for the work to be performed on the John C. Calhoun Expressway.
3. Augusta Engineering Department will pay any fees for plan review and/or permits to be obtained from the City or other agencies, as needed, or provided as a reimbursable fee.
4. Geotechnical borings and analysis will be provided by Augusta Engineering Department in order to provide subsurface conditions and a recommendation for new pavement sections at the proposed asphalt addition locations.

EXCLUSIONS:

1. Construction staking.
2. Construction materials or other testing services not included.
3. Improvements to onsite features outside the area as outlined on Exhibit 1.
4. The scope of work does not extend to designing such public utility services as electrical power distribution, telephone / cable, gas, or telecommunications.
5. Any services not expressly included in this proposal are excluded; however, any additional services may be provided on a time and material basis or as a separate agreement upon request.

FEE PROPOSAL:

We propose to provide the engineering and survey services based on the per task breakdown below. Additional services can be provided through a supplemental services proposal or on a time and material (T&M) basis at our standard hourly rates that are in effect at that time. A breakdown of these fees are as follows:

Basic Services (Lump Sum)	**Proposed Fee**
Task 1: Survey Services	$9,280
Task 2: Final Engineering Design (100%)	$21,870
Basic Services Total:	**$31,150**
Additional Services	
Task 3: Easement Maps ($750 / Easement Map). Three (3) assumed	$2,250
Task 4: NPDES Monitoring & Inspections ($700/Month @ 3 months)	$2,100
Task 5: Bidding Assistance (Lump Sum)	$3,420
Task 6: Construction Phase Services *(Time & Matl. estimate for 3 month duration)**	$12,000

We expect to submit periodic invoices as the work progresses and to receive payment within thirty (30) days thereafter.

TIME OF COMPLETION:

We are prepared to begin work upon receipt of your approval of this proposal. The survey can commence within 14 days. We anticipate that final construction drawings will be completed within 4-weeks following completion of the survey.

We appreciate the opportunity to submit this proposal and trust that you find it satisfactory. We stand ready to proceed based on your written direction. Should you have any questions concerning this proposal, please do not hesitate to call.

Sincerely,

CRANSTON ENGINEERING GROUP, P.C.

Tom Dunaway, P.E., MBA

WTD/mko
enclosures

ACCEPTED:

AUGUSTA ENGINEERING DEPARTMENT

BY:_____

TITLE:_____

DATE:_____

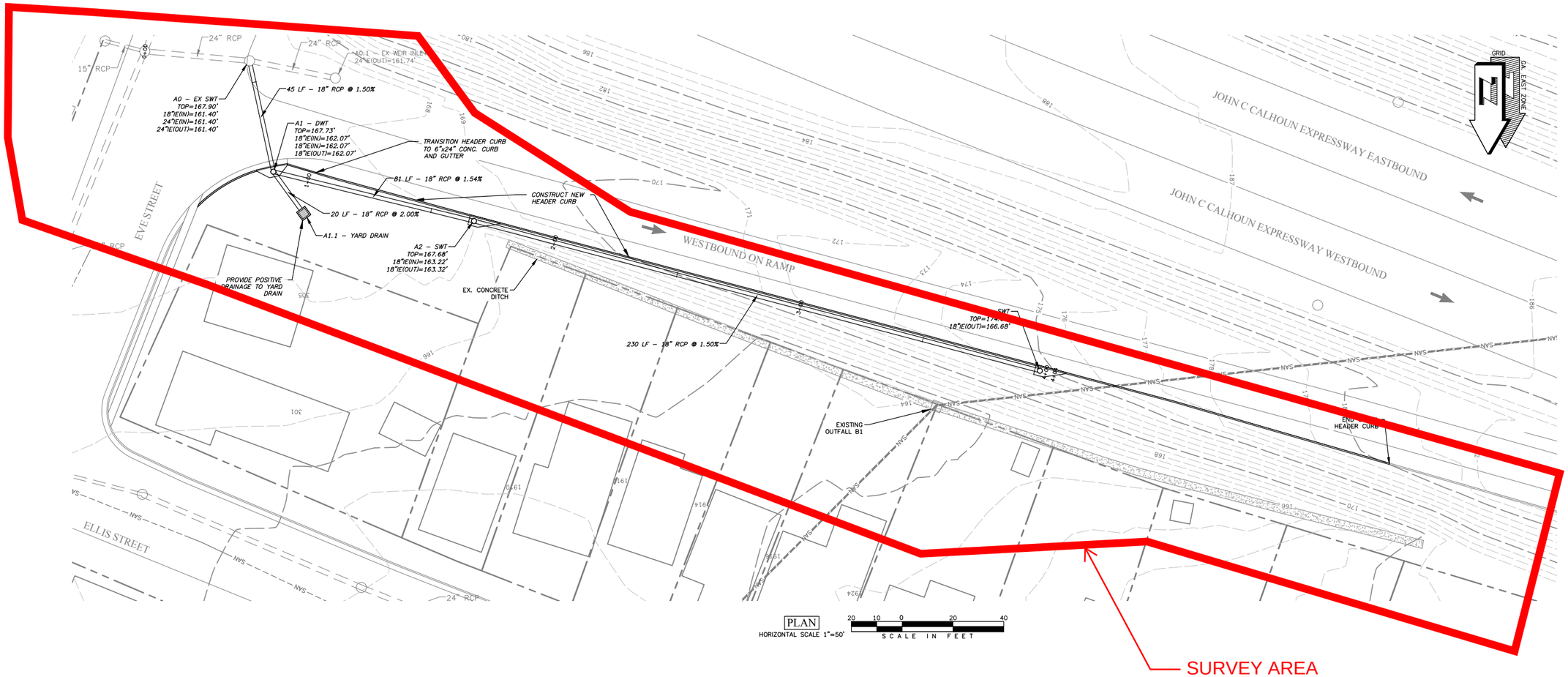

PLAN
HORIZONTAL SCALE 1"=50'
20 10 0 20 40
SCALE IN FEET

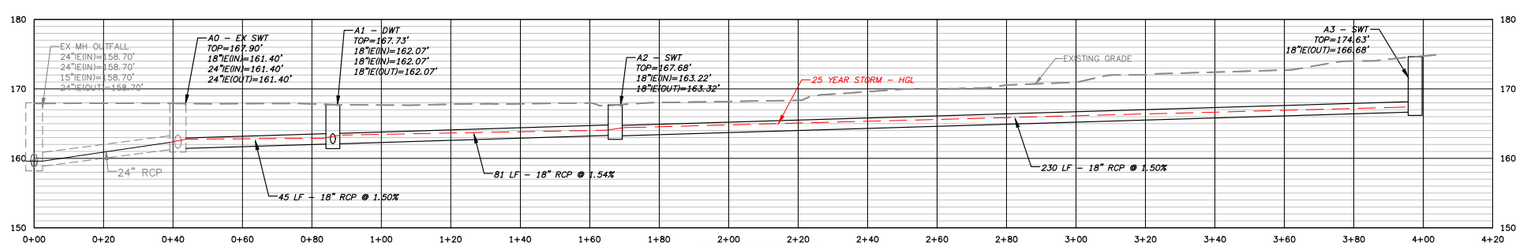

FINAL CONCEPT
HORIZONTAL SCALE: 1"=20'
VERTICAL SCALE: 1"=10'

CONCEPT PLAN

- CONSTRUCT NEW HEADER CURB, YARD DRAIN AND CATCH BASINS TO COLLECT & CONVEY SURFACE WATER RUNOFF FROM TO THE EXISTING STORM SEWER SYSTEM ON EVE STREET.
- THE PROPOSED IMPROVEMENTS REDUCE THE CONTRIBUTING AREA TO EXISTING OUTFALL B1 FROM 2.75 ACRES TO 2.07 ACRES. THE IMPERVIOUS AREA TRIBUTARY TO EXISTING OUTFALL B1 IS ALSO REDUCED FROM 0.79 ACRES TO 0.19 ACRES.

CRANSTON

REV #	DATE	DESCRIPTION

ELLIS STREET DRAINAGE IMPROVEMENTS

CONCEPT PLAN

DRAWN BY:	MKO
CHECKED BY:	MKO
APPROVED BY:	WTD
DATE:	10/20/22
SCALE:	1" = 20'
JOB No.	202
DRAWING No.	C201

RFQ Opening - RFQ Item #19-148
Engineering Services for Drainage Study, Stormwater System Assessment and Drainage Improvements Project for the Augusta, GA – Engineering Department
RFQ Due: Thursday, February 21, 2019 @ 11:00 a.m.

Total Number Specifications Mailed Out: 24
Total Number Specifications Download (Demandstar): 5
Total Electronic Notifications (Demandstar): 103
Pre Qualifications Conference Attendees: 20
Total packages submitted: 10
Total Noncompliant: 0

VENDORS	Attachment "B"	E-Verify Number	SAVE Form	Original	7 Copies
BENESCH 1005 BROAD STREET SUITE 200 AUGUSTA, GA 30901	Yes	307873	Yes	Yes	Yes
GOODWYN, MILLS, AND CAWOOD, INC 6120 POWERS FERRY RD NW SUITE 350 ATLANTA, GA 30339	Yes	425070	Yes	Yes	Yes
MORELAND ALTOBELLI ASSOCIATES, LLC 2450 COMMERCE AVENUE SUITE 100 DULUTH, GA 30096	Yes	53328	Yes	Yes	Yes
EMC-ENGINEERING SERVICES 4424 COLUMBIA RD SUITE B MARTINEZ, GA 30907	Yes	324745	Yes	Yes	Yes
HUSSEY, GAY, BELL & DEYOUNG, INC, CONSULTING ENGINEERS 329 COMMERCIAL DR SUITE 200 SAVANNAH, GA 31406	Yes	398475	Yes	Yes	Yes
CONSTANTINE ENGINEERING, INC 1570 BROAD STREET SUITE C AUGUSTA, GA 30904	Yes	104087	Yes	Yes	Yes
JOHNSON, LASCHOBER & ASSOCIATES, P.C. 1296 BROAD STREET AUGUSTA, GA 30901	Yes	226309	Yes	Yes	Yes
W. K. DICKSON & CO. 1450 GREENE STREET SUITE 225 AUGUSTA, GA 30901	Yes	110665	Yes	Yes	Yes
CRANSTON ENGINEERING GROUP. P.C. 452 ELLIS STREET AUGUSTA, GA 30903	Yes	64684	Yes	Yes	Yes
ZIMMERMAN, EVANS AND LEOPOLD, INC 435 TELFAIR STREET AUGUSTA, GA 30901	Yes	257101	Yes	Yes	Yes

Commission Meeting

March 7, 2023

Augusta's Grounds and Landscape Improvements and Maintenance – Augusta Engineering

RFP 22-301

File Reference: 23-014 (A)

Department: Engineering & Environmental Services

Presenter: Hameed Malik, Director

Caption: Motion to **approve** Award of "Augusta's Grounds and Landscaped Improvements Maintenance" Contract to Augusta Quality LLC for Groups 1, 2 and 3 - Attached EXHIBIT A Contract Services, subject to receipt of signed contract and proper insurance documents. The Contract is effective 1/1/2023 for four years with an option to renew for two additional one-year terms. Also, approve $330,000/year to fund these contracted services. Requested by Engineering. RFP 22-301**(Approved by Engineering Services Committee February 28, 2023)**

Background: Contract services are integral part of Augusta Engineering Services Program delivery. Augusta Engineering is utilizing contract services since 2019 to manage and maintain highly visible and entryways right-of-way landscaped areas under its storm water services program. This contract will be the continuity of existing services under the 2019 contract as it ends soon. Supplementing Augusta Engineering maintenance resources with contract services such as landscaped area upkeep & maintenance is a practical approach to complete and sustain much needed maintenance services in a cost effective and timely manner. Such services are essential to minimizing public safety risk and associated potential hazard liabilities, enhancing surrounding aesthetic and improving quality of life.

Analysis: An RFP was issued though the Procurement Department. Proposals were received on November 28, 2022. 4 vendors responded with 2 being deemed non-compliant. Augusta Quality LLC and Pond Maintenance of Augusta were the two firms that were evaluated. Firms were evaluated based on qualifications, relevant experience, and ability to provide requested services. Fee schedule and landscaped areas list is attached as EXHIBIT A.

The award is only for Groups 1, 2 and 3 for the Engineering Department. Group 4 is still under evaluation pending funding availability and will be presented for award once funding is available.

Financial Impact: Funds are available in Stormwater Utility funds in amount of $330,000.00

Alternatives:	Do not approve and find in-house forces to keep up with needed maintenance work.
Recommendation:	Approve Award of "Augusta's Grounds and Landscaped Improvements Maintenance" Contract to Augusta Quality LLC for Groups 1, 2 and 3 - Attached EXHIBIT A Contract Services, subject to receipt of signed contract and proper insurance documents. The Contract is effective 1/1/2023 for four years with an option to renew for two additional one-year terms. Also, approve $330,000/year to fund these contracted services. Requested by Engineering. RFP 22-301
Funds are available in the following accounts:	($330,000) 581-044320-52.11120 - Stormwater Funds
REVIEWED AND APPROVED BY:	HM/SR

Request for Proposals

Request for Proposals will be received at this office until **Monday, November 28, 2022 @ 3:00 p.m. via ZOOM Meeting ID: 873 6253 1690; Passcode: 760954 for furnishing:**

RFP Item #22-301 **Augusta's Grounds and Landscaped Improvements Maintenance for Augusta, GA – Engineering Department**

RFPs will be received by: The Augusta Commission hereinafter referred to as the OWNER at the offices of:

Geri A. Sams, Director
Augusta Procurement Department
535 Telfair Street - Room 605
Augusta, Georgia 30901

RFP documents may be examined at the office of the Augusta, GA Procurement Department, 535 Telfair Street – Room 605, Augusta, GA 30901 (706-821-2422). Plans and specifications for the project shall be obtained by all prime contractors, subcontractors, and suppliers exclusively from ARC Southern. **The fees for the plans and specifications which are non-refundable are $20.00.**

It is the wish of the Owner that all businesses are given the opportunity to submit on this project. To facilitate this policy the Owner is providing the opportunity to view plans online (www.e-arc.com) at no charge through **ARC Southern (706-821-0405)** beginning **Thursday, October 20, 2022.** Proponents are cautioned that submitting a package without Procurement of a complete set are likely to overlook issues of construction phasing, delivery of goods or services, or coordination with other work that is material to the successful completion of the project. Proponents are cautioned that acquisition of documents through any other source is not advisable. Acquisition of documents from unauthorized sources places the bidder at the risk of receiving incomplete or inaccurate information upon which to base his qualifications.

Pre-Proposal Conference will be held on Monday, November 14, 2022 @ 10:00 a.m. Via Zoom – Meeting ID: 882 2343 5645; Passcode: 761108.

All questions must be submitted in writing by fax to 706 821-2811 or by email to procbidandcontract@augustaga.gov to the office of the Procurement Department by Tuesday, November 15, 2022 @ 5:00 P.M. No RFP will be accepted by fax or email, all must be received by mail or hand delivered.

No RFP may be withdrawn for a period of **90** days after bids have been opened, pending the execution of contract with the successful bidder(s).

***Request for proposals (RFP) and specifications*.** An RFP shall be issued by the Procurement Office and shall include specifications prepared in accordance with Article 4 (Product Specifications), and all contractual terms and conditions, applicable to the procurement. **All specific requirements contained in the request for proposal including, but not limited to, the number of copies needed, the timing of the submission, the required financial data, and any other requirements designated by the Procurement Department are considered material conditions of the bid which are not waivable or modifiable by the Procurement Director.** All requests to waive or modify any such material condition shall be submitted through the Procurement Director to the appropriate committee of the Augusta, Georgia Commission for approval by the Augusta, Georgia Commission. Please mark RFP number on the outside of the envelope.

GEORGIA E-Verify and Public Contracts: The Georgia E-Verify law requires contractors and all sub-contractors on Georgia public contract (contracts with a government agency) for the physical performance of services over $2,499 in value to enroll in E-Verify, **regardless of the number of employees**. They may be exempt from this requirement if they have no employees and do not plan to hire employees for the purpose of completing any part of the public contract. Certain professions are also exempt. All requests for proposals issued by a city must include the contractor affidavit as part of the requirement for their bid to be considered.

Proponents are cautioned that acquisition of RFP documents through any source other than the office of the Procurement Department is not advisable. Acquisition of RFP documents from unauthorized sources places the proponent at the risk of receiving incomplete or inaccurate information upon which to base their qualifications.

Correspondence must be submitted via mail, fax or email as follows:

Augusta Procurement Department
Attn: Geri A. Sams, Director of Procurement
535 Telfair Street, Room 605
Augusta, GA 30901
Fax: 706-821-2811 or Email: procbidandcontract@augustaga.gov

GERI A. SAMS, Procurement Director

Publish:

Augusta Chronicle	October 20, 27, 2022 and November 3, 10, 2022
Metro Courier	October 20, 2022

Revised: 3/22/21

RFP 22-301 Augusta's Grounds and Landscaped Improvements Maintenance for Augusta, GA – Engineering Department
RFP Due: Monday, November 28, 2022 @ 3:00 p.m.

Total Number Specifications Mailed Out:
Total Number Specifications Download (Demandstar): 11
Total Electronic Notifications (Demandstar): 280
Georgia Procurement Registry: 1920
Total packages submitted: 4
Total Noncompliant: 2

VENDORS	Attachment "B"	E-Verify #	Save Form	Addendum 1	Original	7 Copies	Fee Proposal
Augusta Quality LLC 3904 Wrightsboro Rd. Suite C Augusta, GA 30909	Yes	639585	Yes	Yes	Yes	Yes	Yes
Pond Maintenance of Augusta 3707 Colbert Street Augusta, GA 30906	Yes	67036	Yes	Yes	Yes	Yes	Yes
S&S Lawncare 5009 Deer Trail Dr. Hephzibah, GA 30815	Yes	1850157	Yes	No / Non-Compliant	Yes	Yes	Yes
Wood's Commercial & Residential Lawn Services, Inc 3541 Biltmore Pl. Augusta, GA 30906	Yes	1808457	Yes	No / Non-Compliant	Yes	Yes	Yes

Evaluation Sheet RFP 22-301 Augusta's Grounds and Landscaped Improvements Maintenance
for Augusta, GA – Engineering Department
Evaluation Date: Wednesday, December 28, 2022 @ 3:00 p.m. via ZOOM
Group 1, 2 and 3

Vendors			Augusta Quality LLC 3904 Wrightsboro Rd. Suite C Augusta, GA 30909	Pond Maintenance of Augusta 3707 Colbert Street Augusta, GA 30906	S&S Lawncare 5009 Deer Trail Dr. Hephzibah, GA 30815	Wood's Commercial & Residential Lawn Services, Inc 3541 Biltmore Pl. Augusta, GA 30906	Augusta Quality LLC 3904 Wrightsboro Rd. Suite C Augusta, GA 30909	Pond Maintenance of Augusta 3707 Colbert Street Augusta, GA 30906	S&S Lawncare 5009 Deer Trail Dr. Hephzibah, GA 30815	Wood's Commercial & Residential Lawn Services, Inc 3541 Biltmore Pl. Augusta, GA 30906
Phase 1			**Ranking of 0-5 (Enter a number value between 0 and 5)**							
Evaluation Criteria	**Ranking**	**Points**	**Scale 0 (Low) to 5 (High)**				**Weighted Scores**			
1. Completeness of Response • Package submitted by the deadline • Package is complete (includes requested information as required per this solicitation) • Attachment B is complete, signed and notarized	N/A	Pass/Fail	PASS	PASS	FAIL	FAIL	PASS	PASS	FAIL	PASS
2. Qualifications & Experience	(0-5)	20	5.0	3.8			100.0	75.0	0.0	0.0
3. Organization & Approach	(0-5)	15	5.0	4.0			75.0	60.0	0.0	0.0
4.Scope of Services 1. Project Specific Experience – three (3) years of recent experience in similar to this scope of work. 2. Past performance on project in similar nature 3. Evidence that firm fully understands Owner's goals and project scope	(0-5)	25	5.0	4.0			125.0	100.0	0.0	0.0
5.Financial Stability	(0-5)	5	5.0	5.0			25.0	25.0	0.0	0.0
6. References	(0-5)	5	5.0	5.0			25.0	25.0	0.0	0.0
7. Proximity to Area (only choose 1 line according to location of the company - enter the ranking value for the one line only)										
Within Richmond County	5	10	5.0	5.0			50.0	50.0	0.0	0.0
Within CSRA	5	6					0.0	0.0	0.0	0.0
Within Georgia	5	4					0.0	0.0	0.0	0.0
Within SE United States (includes AL, TN, NC, SC, FL)	5	2					0.0	0.0	0.0	0.0
• All Others	5	1					0.0	0.0	0.0	0.0
Phase 1 Total - (Total Maximum Ranking 30 - Maximum Weighted Total Possible 400)			30.0	26.8			400.0	335.0	0.0	0.0
Phase 2 (Option - Numbers 8-9) (Vendors May Not Receive Less Than a 3 Ranking in Any Category to be Considered for Award)										
8. Presentation by Team	(0-5)	5					0.0	0.0	0.0	0.0
9. Q&A Response to Panel Questions	(0-5)	5					0.0	0.0	0.0	0.0
10. Cost/Fee Proposal Consideration (only choose 1 line according to dollar value of the proposal in relation to all fee proposals - enter the point value for the one line only)							**Cost/Fee Proposal Consideration**			
Lowest Fees	5	10	5.0				50.0	0.0	0.0	0.0
Second	5	6		5.0			0.0	30.0	0.0	0.0
Third	5	4					0.0	0.0	0.0	0.0
Forth	5	2					0.0	0.0	0.0	0.0
Fifth	5	1					0.0	0.0	0.0	0.0
Total Phase 2 - (Total Maximum Ranking 15 - Maximum Weighted Total Possible 100)			5.0	5.0			50.0	30.0	0.0	0.0
Total (Total Possible Score 500) Total (May not Receive Less Than a 3 Ranking in Any										
Total Cumulative Score (Maximum point is 500)			35.0	31.8			450.0	365.0	0.0	0.0

Internal Use Only

Evaluator: Cumulative Date: 12/28/2022

Procurement DepartmentRepresentative:_____Nancy Williams_____
Procurement Department Completion Date: 12/28/2022

Augusta GEORGIA

ENGINEERING DEPARTMENT

Hameed Malik, Ph.D., P.E., Director

MEMORANDUM

TO: Ms. Geri Sams, Director - Procurement

FROM: Hameed Malik, Ph.D., PE, Director- Engineering

DATE: February 16, 2023

SUBJECT: **Augusta's Grounds and Landscaped Improvements Maintenance**
Augusta, GA-Engineering Department
RFP 22-301
File Reference: 23-014(A)

It is recommendation of Augusta Engineering (AE) to award the Augusta's Grounds and Landscaped Improvements Maintenance contract to Augusta Quality LLC (AQL) for services listed as Group 1 - 3 in RFP 22-301. These recommendations only include Group 1-3 and associated fee schedule. Please note that Group 4 is still under evaluation and will be awarded later.

AE has taken into consideration all submitted information, services delivery team, and overall score secured by these firms to make this recommendation. In addition, AE reviewed submitted fees by both firms and compared among each other, and to AE similar projects unit rates. Also, RFP 22-301 states that i) Listed Group **1,** Group 2, Group 3 will be awarded to only one vendor. Accordingly, AE is recommending awarding the contract to AQL and accepting unit rates as submitted by AQL for Groups 1-3 ground and landscaped improvements maintenance for duration of this contract.

AE is preparing a contract award agenda item for Augusta Commission action. Award is contingent upon receipt of signed contract and proper Insurance document.

Should you require additional information, please do not hesitate to contact me at (706)796-5040.

Thank you.

/hm

cc: Darrell White & Nancy Williams, Procurement Department
Compliance Department
Lewis Avery, CPA, Engineering Assistant Director – Finance & Admin
Charlie Gay, Engineering Assistant Director - Maintenance
June Hamal, Associate Director Construction & Program Delivery
Program File

Augusta Engineering Administration
452 Walker Street, Suite 110 – Augusta, GA 30901
Office: (706) 796 – 5040 Fax: (706) 796 -5045
www.augustaga.gov

Original

EXHIBIT A

GROUP 1

Roadway and Roundabout Landscaped Improvements Maintenance ***						
	ITEM NO.	DESCRIPTION	UNIT	PERIOD	UNIT PRICE	EXTENDED PRICE
	001-1000	Force Account	LS	LUMP	100,000	$100,000
ROADWAY Landscaped Improvements Maintenance						
Riverwatch Parkway (River Shoals to I-20 - Median Islands and I-20 Off-Ramp Landscape Side Slope)					Yearly Cost	
	A	Full Grounds Maintenance	Yearly Cost	Base Year 1	37572.00	
	B	Full Ground Maintenance	Yearly Cost	Option Year 1	37572.00	
	C	Full Grounds Maintenance	Yearly Cost	Option Year 2	37572.00	
	D	Full Grounds Maintenance	Yearly Cost	Option Year 3	37572.00	
					SUBTOTAL	150288.00
John C Calhoun -Landscaped Islands & area in between these Islands; Ramps Landscaped Area					Yearly Cost	
	A	Full Grounds Maintenance	Yearly Cost	Base Year 1	17400.00	
	B	Full Ground Maintenance	Yearly Cost	Option Year 1	17400.00	
	C	Full Grounds Maintenance	Yearly Cost	Option Year 2	17400.00	
	D	Full Grounds Maintenance	Yearly Cost	Option Year 3	17400.00	
					SUBTOTAL	69600.00
Windsor Spring Rd-Landscaped Median (Tobacco to Hwy 88)					Yearly Cost	
	A	Full Grounds Maintenance	Yearly Cost	Base Year 1	31500.00	
	B	Full Grounds Maintenance	Yearly Cost	Option Year 1	31500.00	
	C	Full Grounds Maintenance	Yearly Cost	Option Year 2	31500.00	
	D	Full Grounds Maintenance	Yearly Cost	Option Year 3	31500.00	
					SUBTOTAL	126000.00

SECTION 4 Fee Proposal shall be submitted in a separate sealed envelope with the following information on the outside of it: RFP # 22-301 - Augusta Roadway, Roundabout, & Other Areas Landscaped Improvements Maintenance

EXHIBITA

RFP #22-301 Augusta's Grounds and Landscaped Improvements Maintenan...

Augusta Engineering

	ITEM NO.	DESCRIPTION	UNIT	PERIOD	Yearly Cost
15th Street-Landscaped Median (John Calhoun to Laney Walker)					
	A	Full Grounds Maintenance	Yearly Cost	Base Year 1	30480.00
	B	Full Grounds Maintenance	Yearly Cost	Option Year 1	30480.00
	C	Full Grounds Maintenance	Yearly Cost	Option Year 2	30480.00
	D	Full Grounds Maintenance	Yearly Cost	Option Year 3	30480.00
					SUBTOTAL 121920.00
Wrightsboro Rd -Landscaped Median (Mark Church Rd to I-520)					**Yearly Cost**
	A	Full Grounds Maintenance	Yearly Cost	Base Year 1	14300.00
	B	Full Grounds Maintenance	Yearly Cost	Option Year 1	14300.00
	C	Full Grounds Maintenance	Yearly Cost	Option Year 2	14300.00
	D	Full Grounds Maintenance	Yearly Cost	Option Year 3	14300.00
					SUBTOTAL 57200.00
Gordon Hwy -Landscaped Median (Bayvale Rd to North Leg)					**Yearly Cost**
	A	Full Grounds Maintenance	Yearly Cost	Base Year 1	14580.00
	B	Full Grounds Maintenance	Yearly Cost	Option Year 1	14580.00
	C	Full Grounds Maintenance	Yearly Cost	Option Year 2	14580.00
	D	Full Grounds Maintenance	Yearly Cost	Option Year 3	14580.00
					SUBTOTAL 58320.00
Walton Way -Landscaped Median (St. Sebastian Way to 11th St.)					**Yearly Cost**
	A	Full Grounds Maintenance	Yearly Cost	Base Year 1	11412.00
	B	Full Grounds Maintenance	Yearly Cost	Option Year 1	11412.00
	C	Full Grounds Maintenance	Yearly Cost	Option Year 2	11412.00
	D	Full Grounds Maintenance	Yearly Cost	Option Year 3	11412.00
					SUBTOTAL 45648.00

SECTION 4 Fee Proposal shall be submitted in a separate sealed envelope with the following information on the outside of it: RFP # 22-301 - Augusta Roadway, Roundabout, & Other Areas Landscaped Improvements Maintenance

EXHIBIT A

RFP #22-301 Augusta's Grounds and Landscaped Improvements Maintenance
Augusta Engineering

ROUNDABOUT Landscaped Improvements Maintenance						
Druid Park Ave Roundabout (including adjacent landscaped ROW and Fountain maintenance)					**Yearly Cost**	
	A	Full Grounds Maintenance	Yearly Cost	Base Year 1	6600.00	
	B	Full Ground Maintenance	Yearly Cost	Option Year 1	6600.00	
	C	Full Grounds Maintenance	Yearly Cost	Option Year 2	6600.00	
	D	Full Grounds Maintenance	Yearly Cost	Option Year 3	6600.00	
					SUBTOTAL	26400.00
	ITEM NO.	**DESCRIPTION**	**UNIT**	**PERIOD**	**UNIT PRICE**	**EXTENDED PRICE**
ROUNDABOUT Landscaped Improvements Maintenance						
Twiggs/Old Savannah Road Roundabout – Two (including adjacent landscaped ROW)					**Yearly Cost**	
	A	Full Grounds Maintenance	Yearly Cost	Base Year 1	24500.00	
	B	Full Ground Maintenance	Yearly Cost	Option Year 1	24500.00	
	C	Full Grounds Maintenance	Yearly Cost	Option Year 2	24500.00	
	D	Full Grounds Maintenance	Yearly Cost	Option Year 3	24500.00	
					SUBTOTAL	98000.00
Wheeler Rd/Aumond Rd Roundabout (including adjacent landscaped ROW)					**Yearly Cost**	
	A	Full Grounds Maintenance	Yearly Cost	Base Year 1	4900.00	
	B	Full Ground Maintenance	Yearly Cost	Option Year 1	4900.00	
	C	Full Grounds Maintenance	Yearly Cost	Option Year 2	4900.00	
	D	Full Grounds Maintenance	Yearly Cost	Option Year 3	4900.00	
					SUBTOTAL	19600.00

SECTION 4 Fee Proposal shall be submitted in a separate sealed envelope with the following information on the outside of it: RFP # 22-301 - Augusta Roadway, Roundabout, & Other Areas Landscaped Improvements Maintenance

EXHIBIT A

RFP #22-301 Augusta's Grounds and Landscaped Improvements Maintenance
Augusta Engineering

	ITEM NO.	DESCRIPTION	UNIT	PERIOD	Yearly Cost	
Milledge Rd/N Leg Rd Roundabout (Including adjacent ROW)						
	A	Full Grounds Maintenance	Yearly Cost	Base Year 1	4900.00	
	B	Full Ground Maintenance	Yearly Cost	Option Year 1	4900.00	
	C	Full Ground Maintenance	Yearly Cost	Option Year 2	4900.00	
	D	Full Ground Maintenance	Yearly Cost	Option Year 3	4900.00	
					SUBTOTAL	19600.00
Old Waynesboro Landscaped Entryway (at HWY 56)					Yearly Cost	
	A	Full Grounds Maintenance	Yearly Cost	Base Year 1	4560.00	
	B	Full Grounds Maintenance	Yearly Cost	Option Year 1	4560.00	
	C	Full Grounds Maintenance	Yearly Cost	Option Year 2	4560.00	
	D	Full Grounds Maintenance	Yearly Cost	Option Year 3	4560.00	
					SUBTOTAL	18240.00
					TOTAL	810816.00

GROUP 2

	ITEM NO.	DESCRIPTION	UNIT	PERIOD	Yearly Cost
Linear Park Maintenance					
Fifth Street Bridge Linear Park (Landscaped Planters full maintenance, Weekly Bridge Deck & Deck fixture cleaning)					
	A	Full Ground Maintenance	Yearly Cost	Base Year 1	10776.00
	B	Full Grounds Maintenance	Yearly Cost	Option Year 2	10776.00
	C	Full Grounds Maintenance	Yearly Cost	Option Year 3	10776.00
	D	Full Grounds Maintenance	Yearly Cost	Option Year 3	10776.00
				TOTAL	43104.00

SECTION 4 Fee Proposal shall be submitted in a separate sealed envelope with the following information on the outside of it: RFP # 22-301 - Augusta Roadway, Roundabout, & Other Areas Landscaped Improvements Maintenance

EXHIBIT A

GROUP 3

ADDITIONAL ROADWAYS & ROUNABOUTS Landscaped Improvements Maintenance					
Additional Roundabout (assume similar to Wheeler/Aumond)					**Yearly Cost**
	A	Full Ground Maintenance	Yearly Cost	Base Year 1	4900.00
	B	Full Grounds Maintenance	Yearly Cost	Option Year 2	4900.00
	C	Full Grounds Maintenance	Yearly Cost	Option Year 3	4900.00
	D	Full Grounds Maintenance	Yearly Cost	Option Year 3	4900.00
				SUBTOTAL	19600.00

ADDITIONAL ROADWAYS & ROUNABOUTS Landscaped Improvements Maintenance					
Additional Roadways (assume similar to 15th Street Landscaped Median)					**Yearly Cost**
	A	Full Ground Maintenance	Yearly Cost	Base Year 1	30480.00
	B	Full Grounds Maintenance	Yearly Cost	Option Year 2	30480.00
	C	Full Grounds Maintenance	Yearly Cost	Option Year 3	30480.00
	D	Full Grounds Maintenance	Yearly Cost	Option Year 3	30480.00
				SUBTOTAL	121920.00

ADDITIONAL ROADWAYS & ROUNABOUTS Landscaped Improvements Maintenance					
Additional Roadways (assume similar to Riverwatch/I20 Ramp)					**Yearly Cost**
	A	Full Ground Maintenance	Yearly Cost	Base Year 1	37572.00
	B	Full Grounds Maintenance	Yearly Cost	Option Year 2	37572.00
	C	Full Grounds Maintenance	Yearly Cost	Option Year 3	37572.00
	D	Full Grounds Maintenance	Yearly Cost	Option Year 3	37572.00
				SUBTOTAL	150288.00

SECTION 4 Fee Proposal shall be submitted in a separate sealed envelope with the following information on the outside of it: RFP # 22-301 - Augusta Roadway, Roundabout, & Other Areas Landscaped Improvements Maintenance

EXHIBIT A

ADDITIONAL ROADWAYS & ROUNABOUTS Landscaped Improvements Maintenance					
Additional Roadways (assume similar to Gordon Hwy (North Leg))					**Yearly Cost**
	A	Full Ground Maintenance	Yearly Cost	Base Year 1	14580.00
	B	Full Grounds Maintenance	Yearly Cost	Option Year 2	14580.00
	C	Full Grounds Maintenance	Yearly Cost	Option Year 3	14580.00
	D	Full Grounds Maintenance	Yearly Cost	Option Year 3	14580.00
				SUBTOTAL	58320.00
				TOTAL	343968.00

Special Note for Groups 1 to 3:

Augusta's intent is to select one qualified contractor for the services listed above. Contract award will be based on negotiated annual price per location. However, based on the Evaluation Criteria, Augusta reserves the right to select more than one firm to provide the requested services.

Totals Group 1: 810816.00

Total Group 2: 43104.00

Total Group 3: 343968.00

Grand Total (Group 1 – 3): 1197888.00

TERM: The term of the contract is for 4 years period (Base year and three options years) with an option to extend of an additional one (1) one (1) year terms.

Georgia Commercial Herbicide/Pesticide Applicator License number:

Commercial Pesticide License #100438

(Vendors are required to supply a copy of their license for commercial herbicide/pesticide application with your bid submittal.)

SECTION 4 Fee Proposal shall be submitted in a separate sealed envelope with the following information on the outside of it: RFP # 22-301 - Augusta Roadway, Roundabout, & Other Areas Landscaped Improvements Maintenance

RISE AND SHINE LAWN CARE AND
LANDSCAPING, LLC
1159 WALTONS TRAIL
HEPHZIBAH, GA 30815

M & C LAWN CARE
& MAINTENANCE SERVICES, LLC
3958 WRIGHTSBORO RD., SUITE C
AUGUSTA, GA. 30909

GREEN KEEPER LANDSCAPING
342 BOY SCOUT ROAD
AUGUSTA, GA 30909

ATTN: IVORY WHITFIELD
LIVING WATER
3019 TOBACCO RD
HEPHZIBAH, GA 30815

CLEAN CUT LANDSCAPING
2712 DAVIS MILL RD.
HEPHZIBAH, GA 30815

PEACH STATE LAWNCARE
2307 OVERLOOK RD
AUGUSTA, GA 30901

BARRETT WALKER LANDSCAPING
1830 BEAVER CREEK LANE
HEPHZIBAH, GA 30815

LUMBER JACK LAWN
ATTN: COREY HUFF
3315 LIMBER TWIG LANE
AUGUSTA, GA 30906

PIEDMONT LANDSCAPE
2013 FRANKE CT.
AUGUSTA, GA 30909

RFP ITEM 22-301
AUGUSTA'S GROUNDS AND
LANDSCAPED IMPROVEMENTS
MAINTENANCE FOR ENGINEERING
DEPARTMENT
RFP DUE: MON NOV 28, 2022 @ 3:00 P.M.

JACOBS LAND MANAGEMENT
733 SCOTT NIXON MEMORIAL DRIVE
AUGUSTA, GA 30907

EDGE LANDSCAPE MANAGEMENT
2010 KEW COURT
GROVETOWN GA 30813

AUGUSTA LAWN & TURF
3618 PHILLIPS DRIVE
MARTINEZ, GA 30907

SCOTTS LAWN SERVICE
2013 FRANKE CT,
AUGUSTA, GA 30909

ATTN: TONY ROBINSON
CSRA LANDSCAPING
2321-H PEACH ORCHARD ROAD
AUGUSTA, GA 30906

TYLER LAWN CARE
1159 WALTON'S TRAIL
HEPHZIBAH, GA 30815

GEORGIA GREEN LAWNCARE
2204 RICHARDS RD.
AUGUSTA, GA 30906

LARRY MCCORD DESIGN BUILD
2016 HIGHLAND AVE.
AUGUSTA, GA 30904

ROBERT FORMANS LAWN CARE
LANDSCAPING
2815 LUMPKIN RD.
AUGUSTA, GA 30906

RFP ITEM 22-301
AUGUSTA'S GROUNDS AND
LANDSCAPED IMPROVEMENTS
MAINTENANCE FOR ENGINEERING
DEPARTMENT
RFP MAILED: 10/20/22

HOME DETOX
2002 LANIER DR.
AUGUSTA, GA 30904

T. GARRETT ENTERPRISE
2326 WALDEN DR.
SUITE B
AUGUSTA, GA 30909

AUGUSTA QUALITY LLC
3904 WRIGHTSBORO RD. STE. C
AUGUSTA, GA 30909

BULLDOGS CUTS
ATTN: KEITH HARRISON
907 PARK AVE.
AUGUSTA, GA 30901

PLM OF AUGUSTA CORP.
DBA/PIEDMONT LANDSCAPE MGMT.
1048 FRANKE INDUSTRIAL DRIVE
AUGUSTA, GA. 30909

YELLOWSTONE LANDSCAPE COMPANY
702 MCKNIGHT INDUSTRIAL BLVD.
MARTINEZ, GA. 30907

STEVE'S LAWN SERVICE
14287 TWIGGS STREET
AUGUSTA, GA 30901

POND MAINTENANCE OF AUGUSTA
3707 COLBERT STREET
AUGUSTA, GEORGIA 30906

JENKINS & JONES ENTERPRISE
3002 HOLLINS DRIVE
HEPHZIBAH, GA 30815

1 OF 2

BELLS LAWN MAINTENANCE
3202 WARWICK PLACE
HEPHZIBAH, GA 30815

S&S LAWNCARE
5009 DEER TRAIL DR.
HEPHZIBAH, GA 30815

ANYTHING OUTDOORS
885 SEQUOIA DRIVE
LEXINGTON, SC 29073

TYLER LAWN CARE
1159 WALTON'S TRAIL
HEPHZIBAH, GA 30815

RON LAMPKIN
CENTRAL SERVICES

MARIA RIVERA-RIVERA
CENTRAL SERVICES

PHYLLIS JOHNSON
COMPLIANCE DEPARTMENT

RFP ITEM 22-301
AUGUSTA'S GROUNDS AND
LANDSCAPED IMPROVEMENTS
MAINTENANCE FOR ENGINEERING
DEPARTMENT
RFP DUE: MON NOV 28, 2022 @ 3:00 P.M.

RFP ITEM 22-301
AUGUSTA'S GROUNDS AND
LANDSCAPED IMPROVEMENTS
MAINTENANCE FOR ENGINEERING
DEPARTMENT
RFP MAILED: 10/20/22

2 OF 2

Planholders

Add Supplier | Export To Excel

Supplier (11)

Supplier	Download Date
Anything Outdoors	10/21/2022
Atlas Technical Consultants LLC	10/25/2022
David Dunagan	10/21/2022
Dodge Data	10/22/2022
H & H Concrete Finishing	10/24/2022
JC Lawn Care	10/21/2022
JNR Equipment	11/01/2022
Jordan Solutions, LLC	10/24/2022
Transcendent Consulting Group	11/17/2022
you've just been served lawn care	10/23/2022
Your Neighborhood Builder, LLC	10/24/2022

Add Supplier

Supplier Details

Supplier Name	Anything Outdoors
Contact Name	Kajmon Odom
Address	885 Sequoia Drive , Lexington, SC 29073
Email	anythingoutdoorsofficial@gmail.com
Phone Number	864-602-1834

Documents

Filename	Type	Action
22-301_RFP	Bid Document / Specifications	View History

Item 14.

2022-10-21	atkinson, alan		
santiagomartin 2022-10-21	ms3staffy@gmail.com santiago, martin	Y	HIA
southern landscapes 2022-10-21	denham2000@charter.net denham, kevin	N	NOM
spanglergilbert 2022-10-21	gilbert.spangler74@gmail.com spangler, gilbert	N	NOM
tifton turf farms 2022-10-21	paul@tiftonturf.com massey, paul	N	NOM
tranish llc 2022-10-21	tranishllc@ymail.com preyer, tracy	N	NOM
tvsdesign 2022-10-21	chaislip@tvsdesign.com Haislip, Corrie	N	NOM
united contract management 2022-10-21	info@icontracting.net Bunn, David	Y	AFA
universal landscaping llc 2022-10-21	ulandscapes@yahoo.com spires, chalandria	N	NOM
whiddon landscaping, llc 2022-10-21	whiddonlandscaping@yahoo.com mccranie, kevin	N	NOM
woodman tree&land services 2022-10-21	woodmantree@live.com wood, anthony	N	NOM
woods total lawn care, llc 2022-10-21	Tyrisiawoods@gmail.com Woods, Tyrisia	N	NOM
woods total lawn care, llc 2022-10-21	Woodstlc@yahoo.com Woods Jr, Ronald		

ETHNIC GROUP	COUNT
African American	286
Asian American	15
Native American	9
Hispanic/Latino	26
Pacific Island/American	0
Non Minority	998
Not Classified	0
Total Number of Vendors	1334
Total Number of Contacts	1920

PR_bid_email_list

FYI: Process Regarding Request for Proposals

Sec. 1-10-51. Request for proposals.

Request for proposals shall be handled in the same manner as the bid process as described above for solicitation and awarding of contracts for goods or services with the following exceptions:

(a) Only the names of the vendors making offers shall be disclosed at the proposal opening.

(b) Content of the proposals submitted by competing persons shall not be disclosed during the process of the negotiations.

(c) Proposals shall be open for public inspection only after the award is made.

(d) Proprietary or confidential information, marked as such in each proposal, shall not be disclosed without the written consent of the offeror.

(e) Discussions may be conducted with responsible persons submitting a proposal determined to have a reasonable chance of being selected for the award. These discussions may be held for the purpose of clarification to assure a full understanding of the solicitation requirement and responsiveness thereto.

(f) Revisions may be permitted after submissions and prior to award for the purpose of obtaining the best and final offers.

(g) In conducting discussions with the persons submitting the proposals, there shall be no disclosure of any information derived from the other persons submitting proposals.

Sec. 1-10-52. Sealed proposals.

(a) *Conditions for use*. In accordance with O.C.G.A. § 36-91-21(c)(1)(C), the competitive sealed proposals method may be utilized when it is determined in writing to be the most advantageous to Augusta, Georgia, taking into consideration the evaluation factors set forth in the request for proposals. The evaluation factors in the request for proposals shall be the basis on which the award decision is made when the sealed proposal method is used. Augusta, Georgia is not restricted from using alternative procurement methods for

obtaining the best value on any procurement, such as Construction Management at Risk, Design/Build, etc.

(b) *Request for proposals*. Competitive sealed proposals shall be solicited through a request for proposals (RFP).

(c) *Public notice*. Adequate public notice of the request for proposals shall be given in the same manner as provided in section 1-10- 50(c)(Public Notice and Bidder's List); provided the normal period of time between notice and receipt of proposals minimally shall be fifteen (15) calendar days.

(d) *Pre-proposal conference*. A pre-proposal conference may be scheduled at least five (5) days prior to the date set for receipt of proposals, and notice shall be handled in a manner similar to section 1-10-50(c)-Public Notice and Bidder's List. No information provided at such pre-proposal conference shall be binding upon Augusta, Georgia unless provided in writing to all offerors.

(e) *Receipt of proposals*. Proposals will be received at the time and place designated in the request for proposals, complete with bidder qualification and technical information. No late proposals shall be accepted. Price information shall be separated from the proposal in a sealed envelope and opened only after the proposals have been reviewed and ranked.

The names of the offerors will be identified at the proposal acceptance; however, no proposal will be handled so as to permit disclosure of the detailed contents of the response until after award of contract. A record of all responses shall be prepared and maintained for the files and audit purposes.

(f) *Public inspection*. The responses will be open for public inspection only after contract award. Proprietary or confidential information marked as such in each proposal will not be disclosed without written consent of the offeror.

(g) *Evaluation and selection*. The request for proposals shall state the relative importance of price and other evaluation factors that will be used in the context of proposal evaluation and contract award. (Pricing proposals will not be opened until the proposals have been reviewed and ranked). Such evaluation factors may include, but not be limited to:

(1) The ability, capacity, and skill of the offeror to perform the contract or

provide the services required;

(2) The capability of the offeror to perform the contract or provide the service promptly or within the time specified, without delay or interference;

(3) The character, integrity, reputation, judgment, experience, and efficiency of the offeror;

(4) The quality of performance on previous contracts;

(5) The previous and existing compliance by the offeror with laws and ordinances relating to the contract or services;

(6) The sufficiency of the financial resources of the offeror relating to his ability to perform the contract;

(7) The quality, availability, and adaptability of the supplies or services to the particular use required; and

(8) Price.

(h) *Selection committee*. A selection committee, minimally consisting of representatives of the procurement office, the using agency, and the Administrator's office or his designee shall convene for the purpose of evaluating the proposals.

(i) *Preliminary negotiations*. Discussions with the offerors and technical revisions to the proposals may occur. Discussions may be conducted with the responsible offerors who submit proposals for the purpose of clarification and to assure full understanding of, and conformance to, the solicitation requirements. Offerors shall be accorded fair and equal treatment with respect to any opportunity for discussions and revision of proposals and such revisions may be permitted after submission and prior to award for the purpose of obtaining best and final offers. In conducting discussions, there shall be no disclosure of information derived from proposals submitted by competing offerors.

(j) From the date proposals are received by the Procurement Director through the date of contract award, no offeror shall make any substitutions, deletions,

additions or other changes in the configuration or structure of the offeror's teams or members of the offeror's team.

(k) *Final negotiations and letting the contract.* The Committee shall rank the technical proposals, open and consider the pricing proposals submitted by each offeror. Award shall be made or recommended for award through the Augusta, Georgia Administrator, to the most responsible and responsive offeror whose proposal is determined to be the most advantageous to Augusta, Georgia, taking into consideration price and the evaluation factors set forth in the request for proposals. No other factors or criteria shall be used in the evaluation. The contract file shall contain a written report of the basis on which the award is made/recommended. The contract shall be awarded or let in accordance with the procedures set forth in this Section and the other applicable sections of this chapter.

Commission Meeting

March 7, 2023

Approve Funding of Capital, Operating & Encumbrance Carryovers

---

Department:	Finance
Presenter:	Donna B. Williams, CGFM
Caption:	Motion to **approve** funding of operating, capital & encumbrance carryovers. **(Approved by Finance February 28, 2023)**
Background:	Operational appropriations are encumbered as a result of purchase orders, contracts or other forms of legal commitments. Encumbrances outstanding at year end are reported as a reservation of fund balance. Operational appropriations lapse at year end while capital projects typically extend over several years and may require budget amendments; however, reappropriations of amounts to cover significant encumbrances are made by the Commission during the subsequent fiscal year as an amendment to the budget.
Analysis:	Several projects, programs and large contracts for services were approved and awarded in 2022; funding for these contracts and projects/programs was appropriated in 2022. In accordance with budgetary policy, Commission approval is required to carry over funding from prior years. Approval will allow the programs to continue without any disruption of service.
Financial Impact:	Funding is available in related funds' fund balance.
Alternatives:	Require use of current year's funding
Recommendation:	Approve use of fund balance for carryovers

Funds are available in the following accounts:	101-00-0000/39-52110	$157,500
	217-00-0000/39-52110	$117,120
	274-00-0000/39-52110	$561,910
	276-00-0000/39-52110	$23,470
	541-00-0000/39-52110	$7,018,050
	542-00-0000/39-52110	$276,050
	581-00-0000/39-52110	$1,529,190

REVIEWED AND APPROVED BY: N/A

Augusta Richmond County
Operating/Encumbrance Carryover Requests
2023

Fund	Org Key	Object	Description	Department	Carryover Amount Requested	Recommended Encumbrance Carryover (3951110)	Recommended Operating/Capital Carryover (3951120)	Total	Notes
	101-01-1310	5234110	Printing & Binding	Clerk of Commission	27,240	27,240	-	27,240	P443481 MCCI and P443304 PF Pettibone & Co electronic/digitalizing scanning project of permanent public records for RC and City
	101-01-6223	5319120	R&M Building	B&G Craig Houghton	64,240	-	64,240	64,240	Servpro of Augusta - mold remediation
	101-02-1112	5316150	Furniture under $5,000	Circuit Court	2,020	2,020	-	2,020	P442333 Weinberger's - Judge's chair
	101-02-2611	5422110	Vehicles	Marshal's Forfeiture Account	22,100	22,100	-	22,100	P443469 Thomson Motor Center
	101-04-1710	5319160	R&M Pavement	Traffic Engineering	41,900	41,900	-	41,900	22ENG175 Beam's Pavement Co - speed humps
101				**General Fund Total**	**157,500**	**93,260**	**64,240**	**157,500**	
	217-07-2210	5213110	Data Processing	Building Inspections	54,720	54,720	-	54,720	P442247 MCCI - scanning historical building plans
	217-07-2210	5422110	Vehicles		62,400	62,400	-	62,400	P439663 Allan Virgil Ford - F150 pickup
217				**Building Inspections Fund**	**117,120**	**117,120**	**-**	**117,120**	
	274-03-4110	5422110	Vehicles	Fire-Administration	40,000	-	40,000	40,000	vehicles budgeted in 2022, but not available per Fleet
		5422210	Trucks, All Sizes		330,000	-	330,000	330,000	2022 funds for air truck but insufficient; will be used to increase 2023 budgeted funds
		5426120	Safety Equipment		51,480	-	51,480	51,480	thermal imaging cameras
	274-03-5120	5319140	R&M Vehicles	Fire-Vehicle Maintenance	140,430	140,430	-	140,430	P439111 ETR - Med 4 repairs
274				**Fire Protection Total**	**561,910**	**140,430**	**421,480**	**561,910**	
	276-04-1610	5311640	Replacement Lights	Street Lighting	23,470	23,470	-	23,470	22ENG161 McCord Design, P443004 GEXPRO infrastructure and LED lights
276				**Street Lights Fund**	**23,470**	**23,470**	**-**	**23,470**	
	541-04-4210	5211120	Contract Services	Solid Waste Disposal	2,203,180	-	2,203,180	2,203,180	
		5212115	Engineering		715,430	450,690	264,740	715,430	ten (10) POs make up the encumbrance carryover
		5422510	Heavy Equipment		2,515,310	2,038,230	477,080	2,515,310	three (3) POs for excavator & compactor make up the encumbrance carryover
		5432221	2C Closure Post Closure		1,584,130	1,584,130	-	1,584,130	20ENG197 SCS Engineers & P417430 Morgan Corp
541				**Waste Management Fund**	**7,018,050**	**4,073,050**	**2,945,000**	**7,018,050**	
	542-04-4110	5213119	Other Technical Services	Garbage Collection	64,660	64,660	-	64,660	22LFL089 SCS Engineers
		5222110	Garbage		134,390	134,390	-	134,390	P422930 & P430752 Coleman Sanitation
		5239110	Contract Labor		77,000	77,000	-	77,000	22ENG135 SCS Engineers & P393614 Augusta Quality LLC
542				**Garbage Collection**	**276,050**	**276,050**	**-**	**276,050**	

Augusta Richmond County
Operating/Encumbrance Carryover Requests
2023

Fund	Org Key	Object	Description	Department	Carryover Amount Requested	Recommended Encumbrance Carryover (3951110)	Recommended Operating/Capital Carryover (3951120)	Recommended Total	Notes
	581-04-4320	5211120	Contractual Services	Stormwater Utility	929,490	929,490	-	929,490	nineteen (19) various purchase orders
		5212115	Engineering		8,600	8,600	-	8,600	19ENG796 Alfred Benesch & Co - drainage study
		5212999	Other Professional Services		124,800	124,800	-	124,800	21ENG137 MOU Stormwater Program Phinizy Center match
		5421110	Machinery/Equipment		175,300	-	175,300	175,300	mowers
		5422210	Trucks, All Sizes		178,000	-	178,000	178,000	bucket truck
		5424120	Software		113,000	-	113,000	113,000	enQuesta software updates
581				**Stormwater Utility**	**1,529,190**	**1,062,890**	**466,300**	**1,529,190**	

Commission Meeting

March 7, 2023

Fund Balance Policy

Department: Finance

Presenter: Donna B. Williams, Finance Director

Caption: Motion to **approve** update of fund balance policy and goals. **(Approved by Finance February 28, 2023)**

Background: The current General Fund fund balance policy was adopted on June 5, 2012. Unassigned fund balance was recommended to be maintained between 90 and 120 days of operations. At the budget planning workshop in 2021 the commission revised the goal to 180 days of operations. There was no formal action taken and subsequent discussion indicated that there was opportunity for further discussion. This item was postponed from a December 2022 meeting.

Analysis: While there are general industry wide goals and practices in setting fund balance levels, the level of fund balance needed is unique to each government and each fund within that government.

Using operational requirements, industry best practices and matrices developed by bond rating firm, fund balance policies are being presented for:

General Fund

- Operating and Emergency Reserve Policy

Special Revenue Funds

- Fire
- Streetlights
- E911

Fund balance – Cash Reserve policies are being presented for:

Enterprise Funds

- Water & Sewer
- Augusta Regional Airport
- Landfill
- Garbage Collection
- Stormwater Utility

Financial Impact: No immediate budgetary impact. Periodic review ang updating of fund balance policies is viewed as a positive management practice by bond rating firms.

Alternatives:	N/A
Recommendation:	Approve as presented
Funds are available in the following accounts:	N/A
REVIEWED AND APPROVED BY:	N/A

Augusta Georgia Fund Balance Policy

Current policy was updated and adopted on June 5, 2012. Unassigned fund balance was recommended to be maintained at a level between 90 and 120 days of operations. At the budget planning workshop in 2021 the commission revised the goal to 180 of operations.

For Governmental General Funds Bond rating agencies use a methodology of Operating (Unassigned) fund balance as a % of Operating Revenues:

Moody's Thresholds	Percent	Equivalent	in Days	in Months
AAA - > 30%	100%	equals	365 Days	12 Months
AA1 – 30% > N > 15%	75%	equals	274 Days	9 Months
AA2 – 15% > n > 5%	50%	equals	182 Days	6 Months
AA3 – 5% > n > 0%	42%	equals	150 Days	5 Months
A1 – 0% > n> -2.5%	33%	equals	120 Days	4 Months
A2 - < -2.85%	25%	equals	90 Days	3 Months

General Fund Unassigned Fund Balance at 12-31-2021 - $40,980,125
# of Days – 103 days

Recommendations:

A. **Conditions for Use of Reserves** - It is the intent of the Government to limit use of General Fund Operating Reserve to address unanticipated, Non-Recurring (one-time) needs. Reserves shall not normally be applied to recurring annual operating expenditures. Reserves may, however, be used to allow time for the Government to restructure its operations in a deliberate manner (as might be required in an economic downturn or an emergency), but such use will only take place in the context of an adopted financial recovery plan.

The Economic Uncertainty/Emergency Reserve may be used at the discretion of the Board of Commissions to:

- Provide resources to meet emergency expenditures in the case of flood, fire, tornado or other natural disaster.
- Provide resources to make up for temporary decreased revenues resulting from loss of major revenue sources.

GOAL : maintain the current AA2 bond rating, implement process to achieve AAA bond rating

Recommendation: set minimum days of fund balance at 120 days of operations with a targeted goal of 150 days of operations.

Process: until targeted number of days goal is reached a minimum of $1,000,000 budget increase in unassigned fund balance will be included in annual budget. Increases to fund balance to be allocated 80% to unassigned, 20% to emergency reserve.

Once the targeted number of days goal has been reached, excess fund balance shall be allocated as follows:

B. Excess of Reserves - In the event Reserves exceed the minimum balance requirements, at the end of each fiscal year, any excess Reserves may be used in the following ways:

a) Fund accrued liabilities, including but not limited to debt service, workers' compensation benefits, pension, employee health benefits and other post-employment benefits as directed and approved within the long-term financial plan and the annual budget resolution. Priority will be given to those items that relieve budget or financial operating pressure in future periods.

b) Appropriated to lower the amount of outstanding general obligation bonds, temporary notes or contributions needed to fund capital projects in the Governments' CMIP.

c) One-time expenditures that do not increase recurring operating costs that cannot be funded through current revenues. Emphasis will be placed on one-time uses that reduce future operating costs; or

d) Start-up expenditures for new programs, provided that such action is approved by the Board of Commissioners and is considered in the context of multi-year projections of revenue and expenditures as prepared by the Finance Department.

e) Property tax mill rate and/or charges for services fee reductions. These actions may happen only following a full evaluation of impact to rollback rates and tax cap implications from a mill rates reduction.

Augusta Georgia Enterprise Funds
Fund Balance / Cash on Hand

For Enterprise funds a more meaningful metric is Number of Days of Cash on Hand. This metric determines how many days the system(s) can operate with no cash inflows from operations.

Recommendations

Water & Sewer Funds

Minimum: meet bond requirements
Goal – 250 days

Augusta Regional Airport

Minimum: meet bond requirements
Goal – 400 days

Landfill

Minimum: meet bond requirements
Goal – 250 days

Garbage Collection

Minimum: meet bond requirements
Goal – 300 days –
Higher requirement due to billing cycle of fees. Fees are billed annually on Property tax statements. Cash is needed to fund operations until 4th quarter.

Stormwater Utility

Minimum: meet bond requirements
Goal – 90 days

Augusta Georgia Special Revenue Funds
Fund Balance

As special revenue funds typically do not issue debt, there are no rating agency metric to use as guides. Fund balance requirements are based on operational needs, which are determined by the government and address specific circumstances related to operational levels.

Fire Department

Fund Balance – 300 days

Since the measurement date occurs when the resources are at peak level, the need for a higher balance is due to timing for receipt of the two main revenue sources of the fund: Ad Valorem Taxes and Insurance Premium Tax. Both revenues are received in the 4th Quarter of the year. Cash is needed for operations until current year Revenues are received.

Unassigned Fund balance in excess of 300 days should be allocated to an assigned fund balance for capital needs.

12-31-2021 Fund balance: $24,941,877
# of Days operations - 295

Streetlights *need to fix the fee structure first*

Fund Balance – 300 days

Since the measurement date occurs when the resources are at peak level, the need for a higher balance is due to timing for receipt of the main revenue source of the fund: Ad Valorem Taxes. Revenue is received in the 4th Quarter of the year. Cash in needed for operations until current year revenues is received.

12-31-2021 Fund balance: $235,894
# of Days operations - 32

E911

Fund Balance – 210 days

Revenue is received throughout the year. Reserve will allow for continued essential service operations should there be a significant economic downturn.

Unassigned Fund balance in excess of 210 days should be allocated to an assigned fund balance for capital needs.

12-31-2021 Fund balance: $3,479,683
# of Days operations – 269

General Fund Operating and Emergency Reserve Policy

I. Authority:

The Mayor and the Board of Commissioners are responsible for legislation, policy formulation, and overall direction setting of the government. This includes the approval of financial policies which establish and direct the operations of Government. The Administrator is responsible for carrying out the policy directives of the Board of Commissioners and managing the day-to-day operations of the executive departments, including the Finance Department. This policy shall be administered on behalf of the Administrator by the Finance Director.

II. Purpose:

The Government desires to maintain a prudent level of financial resources to guard its stakeholders against service disruption in the event of unexpected temporary revenue shortfalls or unpredicted one-time expenditures. In addition, this policy is intended to document the appropriate Reserve level to protect the Government's credit worthiness. The General Fund Operating and Emergency Reserves are accumulated and maintained to provide stability and flexibility in response to unexpected adversity and/or opportunities. The Government desires to maintain a prudent level of financial resources to guard against services disruption in the event of unexpected temporary revenue shortfalls or unpredicted one-time expenditures in the General Fund. This policy serves as framework to provide the capacity to:

1) Provide sufficient cash flow for daily financial needs
2) Provide funds for unforeseen expenditures
3) Offset significant economic downturns and revenue shortfalls
4) Maintain stable tax/fee rates
5) Provide for renewal and replacement of long-lived assets, and
6) Secure and maintain investment grade credit ratings.

This policy establishes amounts the Government will strive to maintain in its General Fund Operating and Emergency Reserves, how the Reserves will be funded, and the conditions under which Reserves may be used.

III. Applicability and Scope:

This policy shall apply to the Augusta Georgia General Fund referred to combined as the "General Fund".

IV. Policy:

A. Reserve Levels - The Government seeks to maintain a minimum level of Unrestricted Fund Balance (per the annual comprehensive financial report (ACFR) on a modified accrual basis of accounting) in the General Fund equivalent to Five months of regular, on-going operating expenditures (including transfers out). Of this

five-month reserve, four-months will be maintained to meet general operating needs and to allow for budgetary uncertainty (named as the "Operating Reserve") and one-month may be targeted to be assigned to provide resources during economic downturns or to address vulnerabilities to extreme events, and emergencies impacting public safety concerns (named the "Emergency Reserve").

The two reserve categories are represented below as a percentage of regular, on-going operating expenditures (including transfers out):

- Operating Reserve: 33% (four-months)
- Emergency Reserve: 8% (one-month)
- Total Reserve Level 43% (five-months)

B. Compliance - The Government will measure its compliance with this policy as of December 31st each year, as soon as practical after final year-end account information becomes available as part of the annual financial audit. During the course of the year the Finance Department shall closely monitor the Government's revenues and expenditures to ensure the Operating Reserve is not used beyond any planned. For the purposes of this policy, current year's actual expenditures will exclude significant Non-Recurring (one-time) Items. The Emergency Reserve is a target the Commission seeks to accumulate in the future 10 years.

If, based on staff's analysis and forecasting, the target level of Operating Reserve is not being met or likely to not be met at some point within a ten-year time horizon, then during the annual budget process, Fund Balance levels will be provided to the Mayor and Board of Commissioners. Should the projected year-end Fund Balance be below the Operating Reserve amount established by this policy, a minimum of $1,000,000 increase in unassigned fund balance will be included in the annual budget. Increases to fund balance will be allocated 80% to Operating Reserve and 20% to Emergency Reserve until reserves are in compliance with policy.

C. Cash Balance - To provide liquidity adequate to meet the demands of government service provision including budgetary uncertainty, unanticipated reductions in revenues or unplanned expenditure increases, Cash Balances will be maintained and managed through the Pooled Cash method in such a way as to minimize short-term borrowing. This reduces overall cost to taxpayers by minimizing interest expense. The four-month Operating Reserve is intended to support this effort and counterbalance the tax collection cycle.

D. Funding the Reserves - Funding of General Fund Reserve targets will generally come from excess revenues over expenditures or one-time revenues. The reserve will be funded in the following priority order: Operating Reserve followed by the Emergency Reserve.

E. Conditions for Use of Reserves - It is the intent of the Government to limit use of General Fund Operating Reserve to address unanticipated, Non-Recurring (one-

time) needs. Reserves shall not normally be applied to recurring annual operating expenditures. Reserves may, however, be used to allow time for the Government to restructure its operations in a deliberate manner (as might be required in an economic downturn or an emergency), but such use will only take place in the context of an adopted long-term financial plan.

The Emergency Reserve may be used at the discretion of the Board of Commissions to:

- Provide resources to meet emergency expenditures in the case of flood, fire, tornado or other natural disaster.
- Provide resources to make up for temporary decreased revenues resulting from loss of major revenue sources or economic uncertainties.

F. Authority over Reserves - The Board of Commissioners may authorize the use of Reserves.

G. Fund Balance Classification - The Government desires to establish a fund balance classification policy consistent with the needs of the Government, and in a manner consistent with governmental accounting standards. The following classifications serve to enhance the usefulness of fund balance information. It shall be the policy to reduce restricted fund balance first, followed by unrestricted fund balance. For unrestricted fund balance, committed amounts should be reduced first, followed by assigned amounts, followed by unassigned amounts.

<u>*Restricted Fund Balance*</u>

a) *Non-spendable Balance:* Assets legally or contractually required to be maintained or are not in spendable form. Such constraint is binding until the legal requirement is repealed or the amounts become spendable.

b) *Restricted Balance:* Assets with externally imposed constraints, such as those mandated by creditors, grantors and contributors, or laws and regulations. Such constraint is binding unless modified or rescinded by the applicable external body, laws, or regulations.

<u>*Unrestricted Fund Balance*</u>

c) *Committed:* Assets with a purpose formally imposed by resolution by the Governing Body of the Government, binding unless modified or rescinded by the Governing Body.

d) *Assigned:* Assets constrained by the government's intent as expressed by the Governing Body, Administrator or designee. Encumbrances shall be considered as assigned, unless they specifically meet the requirements to be committed or restricted.

e) *Unassigned:* All amounts not included in other fund balance classifications.

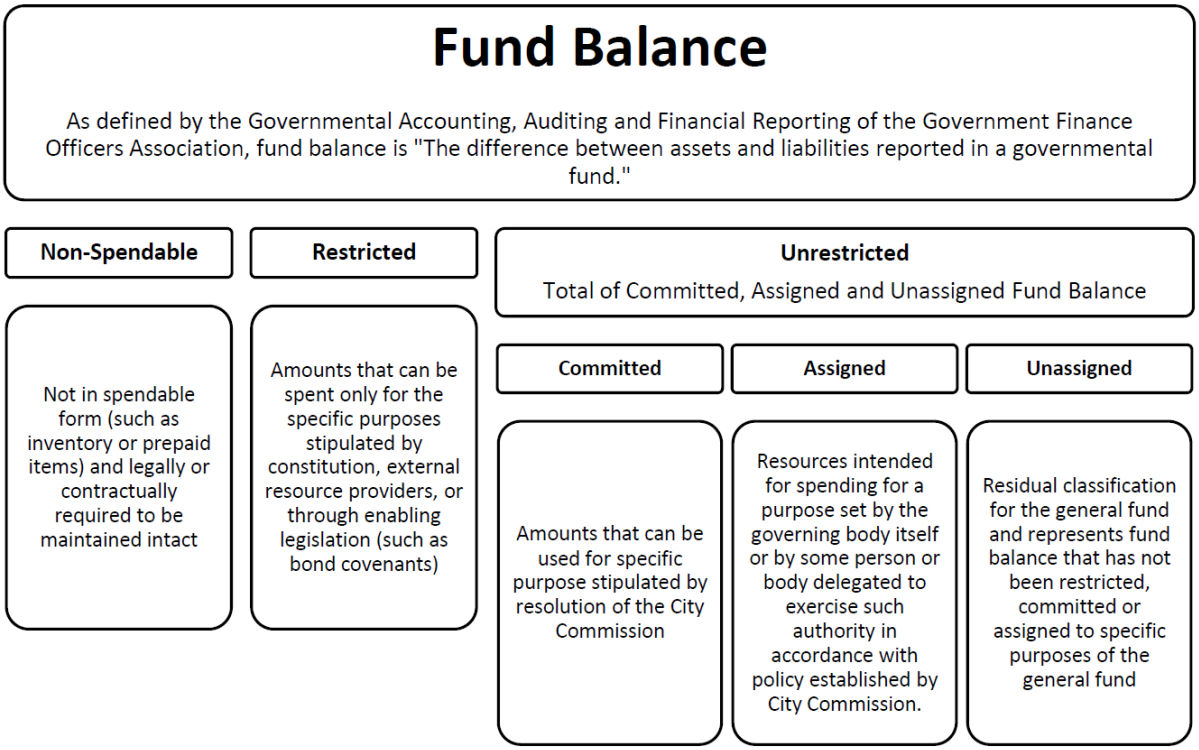

H. Assigning Fund Balance - The Administrator and Finance Director, collectively, are hereby authorized to assign Fund Balance for specific purposes in accordance with the intent of the Administration and actions of the Board of Commissioners. This policy expresses the intent to assign one-month of regular, on-going operating expenditures (including transfers out) for the "Emergency Reserve" to address vulnerabilities to extreme events, emergencies impacting public safety concerns or to temporarily offset unanticipated reduced revenues during economic downturns.

I. Replenishment of Reserves - In the event that Reserves are used resulting in a balance below the four-months minimum, a plan will be developed and included in the formulation of the five-year forecast presented during the annual budget process.

J. Excess of Reserves - In the event Reserves exceed the minimum balance requirements, at the end of each fiscal year, any excess Reserves may be used in the following ways:

a) Fund accrued liabilities, including but not limited to debt service, workers' compensation benefits, pension, employee health benefits and other post-employment benefits as directed and approved within the long-term financial plan and the annual budget resolution. Priority will be given to those items that relieve budget or financial operating pressure in future periods;

b) Appropriated to lower the amount of outstanding general obligation bonds, temporary notes or contributions needed to fund capital projects in the Governments' CMIP;

c) One-time expenditures that do not increase recurring operating costs that cannot be funded through current revenues. Emphasis will be placed on one-time uses that reduce future operating costs; or

d) Start-up expenditures for new programs, provided that such action is approved by the Board of Commissioners and is considered in the context of multi-year projections of revenue and expenditures as prepared by the Finance Department.

e) Property tax mill rate and/or charges for services fee reductions.

K. Periodic Review of the Targets - Compliance with this section will be reviewed in conjunction with the annual budget process. At a minimum, during the annual budget process staff shall review the current and five-year projected Reserves to ensure they are appropriate given the economic and financial risk factors to which the Government is subject.

V. Quality Control and Quality Assurance:

It is the responsibility of the Finance Director to ensure the presence of procedures that provide sufficient guidance to affected Government personnel to fulfill the intent of this policy.

These policies will be reviewed at least annually and updated on an as-needed basis.

VI. Metrics:

To be developed and managed accordingly.

VII. Definitions and Acronyms:

A. Capital Maintenance and Improvement Plan (CMIP) - A plan that describes the capital projects and associated funding sources the Government intends to undertake in the current year plus five additional future years, including the acquisition or construction of capital facilities, equipment and assets, and the maintenance thereof.

B. Cash Balance - The sum of cash and Cash Equivalents of an accounting fund.

C. Cash Equivalent - In the context of cash flows reporting, short-term, highly liquid investments that are both 1) readily convertible to known amounts of cash and 2) so near their maturity that they present insignificant risk of changes in value because of changes in interest rates. Generally, only investments with original maturities of three months or less meet this definition. For this purpose, "original maturity" means maturity as of the date the investment is acquired.

D. Fund Balance - Fund Balance is the difference between (a) assets and deferred outflows of resources and (b) liabilities and deferred inflows of resources in a governmental fund as reported in the Annual Comprehensive Financial Report (ACFR).

E. Fund Balance (Budgetary) – Fund Balance for Budgetary Purposes begins with the beginning of the year unencumbered fund balance as reported in the ACFR's Schedule of Budgetary Accounts, Budget and Actual Budgetary Basis (non-GAAP) for the respective fund, plus revenues less all expenditures recorded on a cash basis for the respective fiscal year.

F. General Fund - One of five governmental fund types. The General Fund typically serves as the chief operating fund of a government. The General Fund is used to account for all financial resources not accounted for in some other fund.

G. Non-Recurring Item - An expenditure that has not occurred in the previous two years and is not expected to occur in the following year.

H. Pooled Cash - The sum of unrestricted cash and investments of several accounting funds that are consolidated for cash management and investment purposes. Investment income or expenditure is allocated to the various funds based on their respective participation and in accordance with generally accepted accounting principles.

I. Reserve - Reserve refers only to the portion of Fund Balance that is intended to provide stability and respond to unplanned events or opportunities.

J. Unrestricted Fund Balance - The difference between total Fund Balance in a governmental fund and its nonspendable and restricted components.

Commission Meeting

March 7, 2023

Finance Bond Work Session 2023

Department:	Administration / Finance
Presenter:	N/A
Caption:	Motion to **approve** a Bond and Fiscal Health work session with Augusta's Financial advisor, Davenport & Company, on March 20, 2023 at 2:00pm in the Linda Beazley Room of the Municipal Building. **(Approved by Finance February 28, 2023)**
Background:	Davenport & Company has provided periodic updates to the commission regarding the municipal bond market, Augusta's fiscal health and upcoming bond issuances. This work session will include an update to the commission regarding current market conditions, upcoming bond issuances, Augusta's bond ratings, debt capacity, Augusta's fiscal health and trends in the economy that may influence the bond market. It is anticipated that Augusta will go to the bond market twice in the 2023. This presentation will include a review of the process and is not tied to a specific bond offering. This allows Davenport to present a global picture of Augusta's presence in the bond markets and current market trends.
Analysis:	N/A
Financial Impact:	N/A
Alternatives:	N/A
Recommendation:	Approve a Bond and Fiscal Health work session with Augusta's Financial advisor, Davenport & Company, on March 20, 2023 at 2:00pm in the Linda Beazley Room of the Municipal Building.
Funds are available in the following accounts:	N/A
<u>REVIEWED AND APPROVED BY:</u>	N/A

Augusta Commission Meeting

March 7, 2023

Appointment of Mr. John Clarke

Department:	Augusta Commission
Presenter:	Commissioner Sean Frantom
Caption:	Motion to **approve** the appointment of Mr. John Clarke to the General Aviation Commission representing **District 7**.
Background:	N/A
Analysis:	N/A
Financial Impact:	N/A
Alternatives:	N/A
Recommendation:	N/A
Funds are available in the following accounts:	N/A
REVIEWED AND APPROVED BY:	N/A

Lena Bonner

From: Commissioner Sean Frantom
Sent: Tuesday, February 21, 2023 2:03 PM
To: Lena Bonner
Subject: Daniel field aviation committee

Ms. Bonner,

Please add John Clarke to be the new District 7 appointee for the Daniel field aviation committee on next full Commission agenda.

Thanks,
Sean

Get Outlook for iOS

Clerk of Commission

Commission, Authorities, & Boards Talent Bank Application

Title	Mr.
First Name *	John
Middle Name *	E.
Last Name *	Clarke
Suffix	Junior
Date Of Birth *	8/23/1946
Address *	Street Address 3308 Sandpiper Lane Address Line 2 City Augusta State / Province / Region Georgia Postal / Zip Code 30907 Country United States
Home Phone *	706-863-0962
Work Phone	706-306-1350
Registered Voter *	District 1 District 2 District 3 District 4 District 5 District 6 District 7 District 8 None
Marital Status *	Single
Education *	Some College
Race *	White
Gender *	Male
Occupation *	Environmental Engineer
Interests	blogging/ writing/ researching/

Commissions, Authorities, & Boards

Volunteer For *	Augusta Richmond County Planning Commission Click add below to apply for more than one board.

* I currently have relatives working for the City of Augusta

- ○ Yes
- ◉ No

* I currently server on an Augusta Board, Commission, or Authority

- ○ Yes
- ◉ No

I would like to receive an email confirmation of my submission.

- ◉ Yes
- ○ No

Email johnneinow@aol.com

Augusta Commission Meeting

March 7, 2023

Reappointment of Mr. James Scott to RCBOA

Department:	Augusta Commission
Presenter:	Commissioners Frantom, Garrett, Lewis and Guilfoyle
Caption:	Motion to **approve** the reappointment of **Mr. James Scott** to the Richmond County Board of Assessors representing **District 10**. **(Requested by Commissioner Wayne Guilfoyle)**
Background:	N/A
Analysis:	N/A
Financial Impact:	N/A
Alternatives:	N/A
Recommendation:	N/A
Funds are available in the following accounts:	N/A
REVIEWED AND APPROVED BY:	N/A

Lena Bonner

From:	Neita Coleman
Sent:	Friday, February 3, 2023 10:09 AM
To:	Lena Bonner
Cc:	S. Renee D'Antignac (dantignac22@gmail.com); Commissioner Wayne Guilfoyle; Natasha L. McFarley; Nancy Morawski
Subject:	Richmond County Board of Assessors - Notification to County Commission
Attachments:	Reappointment Letter of Intent - Richmond Co. BOA_2023.02.03.pdf

Good Morning Ms. Bonner,

At the request of Ms. Renee D'Antignac, Richmond County Board of Assessors Chair, I have attached a letter addressed to the full Commission regarding the reappointment of Mr. William Mills and ~~Mr. James Scott to~~ the Board of Assessors. Please accept this notification as a courtesy to the Commission; a formal request for consideration will be submitted as an agenda item at a later date. If you have any questions, please contact Chair D'Antignac at your convenience by email reply or call (706) 993-7590.

Thank you, in advance, for your time and attention to this matter.

Mrs Bonner, Can you add Mr. James Scott to the Next Commission Meeting. Thanks

Wyn.

Kindest Regards,

Neita Coleman
Executive Assistant to the Chief Appraiser
Board of Assessors Secretary
Richmond County Assessors Office
535 Telfair Street, Suite 120
Augusta, GA 30901
Phone: (706) 821-1765
Fax: (706) 821-2569
www.augustarichmondtaxassessor.com

TALENT BANK INFORMATION QUESTIONNAIRE

To be completed by persons desiring to volunteer their services on the _____ Authority, Board or Commission for Augusta-Richmond County.

NOTE: Any information entered on this questionnaire would become public information upon your appointment.

****

Date April 11, 2007

1. Name James W Scott

   Home Phone 706-798-1427 Bus Phone 706-592-6672

2. Address 3846 Mike Padgett Highway, Augusta, GA 30906
   Street County State Zip

3. Date of Birth 03/15/1938 Sex: Male X Female ____

4. Registered Voter: Yes X No ____

5. Voting District 805

6. Martial Status: Single ____ Married X Separated ____ Engaged ____ Divorced ____

7. Education: High School Richmond Academy

   College University Of Georgia

8. Relatives working for the City or County: None

9. Occupation: Realtor / Certified Appraiser

10. Race: White X African American ____ Asian American ____

    Spanish Surnamed ____ American Indian ____ Other ____

11. List Boards you presently serve on:
    1. Richmond County Tax Assessors Borad

Augusta
GEORGIA

BOARD OF ASSESSORS

TAX ASSESSORS OFFICE
SUITE 120
535 TELFAIR ST. AUGUSTA, GA 30901
(706) 821-2310 – FAX (706) 821-2569
www.augustaga.gov

SHARON RENEE D'ANTIGNAC

January 30, 2023

Greetings Augusta-Richmond County Commission:

As you are aware, there are eight members of the Board of Assessors of Richmond County (BOA). The Augusta-Richmond County Commission appoints six and the Legislative Delegation appoints two. Each serves a four-year term.

The terms expire on April 24, 2023 for two of the current members of the Board: William Mills (District 9) and James Scott (District 10).

In accordance with Georgia law, to be certified to serve on the Board of Assessors (BOA), each person must satisfactorily complete two forty-hour courses and two twenty-hour courses required by the Georgia Department of Revenue (DOR). Additionally, to maintain certification, each member completes twenty hours of Continuing Education each year through workshops or courses approved by the DOR. Due to COVID-19, some current assessor certifications may be completed online for the required credit hours.

Commission appointees William Mills and James Scott are currently certified; and wish to continue another term of service to the Board of Assessors.

We respectfully request your consideration of the aforementioned two persons for reappointment, as they cannot continue to serve past the term expiration date unless reappointed.

Thank you very much for your consideration of this request.

S. Renee D'Antignac
Chair, Board of Assessors

UPDATED 01/03/23

NAME OF BOARD Augusta-Richmond Board of Tax Assessors

Members	Term	Appointed	Effective	Expires	Dist.
Renee D'Antignac	4-yr	05/19/20	Immediately	4/24/24	9 (22)
James W. Scott	4-yr	03/19/19	04/24/19	4/24/23	10 (23)
Juanita L. Burney	4-yr	01/21/20	04/25/20	4/24/24	10(23)
William Mills	4-yr	05/07/19	05/07/19	4/24/23	9(22)
*Lekendrea N. Frazier	4-yr	5/03/22	05/03/22	4/24/25	10(23)
Frank Middleton	4-yr	4/25/21	04/25/21	4/24/25	9(22)

EX-OFFICIO:
Commissioner Wayne Guilfoyle

LEGISLATIVE APPOINTMENTS:

Bryan Simpkins	04/24/23
Bob O'Neal	04/24/23

MEETING DATE: Second Monday of each month 4:00 P.M.

WHERE: Tax Assessor's Office

FUNCTION: Assess all real estate and personal property.

CREATED: 1973 Ga. L. p. 2813; 1974 Ga. L., p.3069; 1993 Ga. L. p. 4482

CONTACT: Renee D'Antignac at 706-821-1765

COMPENSATION: Chairman $875, members $625.00 per month

***Mura Dial- resigned effective May 1, 2022 and Lekendrea N. Frazier appointed to the unexpired term**

Augusta Commission Meeting

March 7, 2023

Minutes Augusta Commission Meeting held February 21, 2023 and February 28, 2023

Department:	Office of the Clerk of Commission
Presenter:	Office of the Clerk of Commission
Caption:	Motion to **approve** the minutes of the Commission Meeting held, Tuesday, February 21, 2023 and Special Called Meeting held February 28, 2023.
Background:	N/A
Analysis:	N/A
Financial Impact:	N/A
Alternatives:	N/A
Recommendation:	N/A
Funds are available in the following accounts:	N/A
REVIEWED AND APPROVED BY:	N/A

Augusta
GEORGIA

COMMISSION MEETING MINUTES

Commission Chamber
Tuesday, February 21, 2023
2:00 PM

INVOCATION

Pastor Sharon Caldwell, Belle-Terrace Presbyterian Church.

PLEDGE OF ALLEGIANCE TO THE FLAG OF THE UNITED STATES OF AMERICA

RECOGNITION(S)

A. Congratulations! Commissioner Francine Scott on her appointment to the National Association of County Officials (NaCo) Justice and Public Safety Steering Committee.

Recognition of Commissioner Scott on her appointment to the National Association of County Officials (NaCo) Justice and Public Safety Steering Committee.

B. Congratulations! January 2023 Years of Service Recipients

Presentations are made to the January 2023 Years of Service recipients.

DELEGATION(S)

C. Ms. Shalanda Morris regarding Diamond Lakes Scoring Towers (storm water drainage issues).

Presentation is made by Ms. Shalanda Morris and Mr. Larry Jones.

CONSENT AGENDA

(Items 1-35)

PUBLIC SERVICES

1. Motion to **approve** a five-year contract with Tailwind AGS, LLC for Food, Beverage & Merchandise Concession Program at Augusta Regional Airport. Approved by the Augusta Aviation Commission on January 26, 2023. RFP 22-279 - The agreement is for a five (5) year initial term with a five (5) year option for renewal.**(Approved by Public Services Committee February 14, 2023)**

   Motion to approve.

   Motion made by Garrett, Seconded by Frantom.
   Voting Yea: Garrett, Johnson, Williams, Frantom, Scott, Smith-McKnight, Pulliam, Lewis, Guilfoyle

2. Motion to **approve** a Not-To-Exceed Purchase Order in the amount of **$3,000,000.00** with JBT Aero Tech Corporation (JBT) for the purchase of two (2) Passenger Boarding Bridges. Approv

by Augusta Aviation Commission on May 26, 2022.**(Approved by Public Services Com February 14, 2023)**

Motion to approve.

Motion made by Garrett, Seconded by Frantom.
Voting Yea: Garrett, Johnson, Williams, Frantom, Scott, Smith-McKnight, Pulliam, Lewis, Guilfoyle

3. Motion to **approve $850,000** for the repairs of the drain pipes and bathrooms in the Diamond Lakes Scoring Towers with a funding source to be identified at the Commission meeting next week. **(Approved by Public Services Committee February 14, 2023)**

   Motion to approve $850,000 for the repairs to the drain pipes and bathrooms at the Diamond Lakes Scoring Towers with $788,359.58 going to Change Order #1 from Horizon Construction to complete repairs and $86,055.94 going to ACC Restoration for the remediation prior to repairs and with the Administrator recommending that $350,000 come from SPLOST 7 which covers Diamond Lakes Scoring Towers interest revenue and $500,000 from SPLOST 8 Diamond Lakes.

   Motion made by Frantom, Seconded by Smith-McKnight.
   Voting Yea: Garrett, Johnson, Williams, Frantom, Scott, Smith-McKnight, Pulliam, Lewis, Guilfoyle

4. Motion to **approve** the lease agreements for art installations for the 2023 - 2024 Augusta Sculpture Trail.**(Approved by Public Services Committee February 14, 2023)**

   Motion to approve.

   Motion made by Garrett, Seconded by Frantom.
   Voting Yea: Garrett, Johnson, Williams, Frantom, Scott, Smith-McKnight, Pulliam, Lewis, Guilfoyle

ADMINISTRATIVE SERVICES

5. Motion to **approve** and update Augusta Georgia's DBE Program for federally assisted contracts in order to comply with the Department of Transportation's program and update DBE rule 49 CFR Part 23.**(Approved by Administrative Services Committee February 14, 2023)**

   Motion to approve.

   Motion made by Frantom, Seconded by Williams.
   Voting Yea: Garrett, Johnson, Williams, Frantom, Scott, Smith-McKnight, Pulliam, Lewis, Guilfoyle

6. Motion to **approve** annual bid award for 23-129 Maintenance Services for Environmental Services Department to include 2 CNG stations. Services is to include pesticide application. Award is for one year to expire 12/31/23 – has an option to extend for one additional year.**(Approved by Administrative Services Committee February 14, 2023)**

   Motion to approve.

Motion made by Garrett, Seconded by Frantom.
Voting Yea: Garrett, Johnson, Williams, Frantom, Scott, Smith-McKnight, Pulliam, Lewis, Guilfoyle

7. Motion to **approve** acceptance of Grant Award for the Summer 2023 Georgia County Internship Program.**(Approved by Administrative Services Committee February 14, 2023)**

   Motion to approve.

   Motion made by Garrett, Seconded by Frantom.
   Voting Yea: Garrett, Johnson, Williams, Frantom, Scott, Smith-McKnight, Pulliam, Lewis, Guilfoyle

8. Motion to **approve** the purchase of one Dodge Durango at a total cost of $45,578 to Thomson Motor Center for the District Attorney's Office. **(Approved by Administrative Service Committee February 14, 2023)**

   Motion to approve.

   Motion made by Garrett, Seconded by Frantom.
   Voting Yea: Garrett, Johnson, Williams, Frantom, Scott, Smith-McKnight, Pulliam, Lewis, Guilfoyle

9. Motion to **approve** annual bid award for 23-129 Maintenance Services for Environmental Services Department to include 2 CNG stations. Services is to include pesticide application. Award is for one year to expire 12/31/23 – has an option to extend for one additional year. **(Approved by Administrative Services Committee February 14, 2023)**

   Motion to approve.

   Motion made by Garrett, Seconded by Frantom.
   Voting Yea: Garrett, Johnson, Williams, Frantom, Scott, Smith-McKnight, Pulliam, Lewis, Guilfoyle

10. Motion to **approve** presentation by Augusta Tomorrow, Inc to include a financial request in the amount of **$150,000** for upcoming Urban Area Master Plan. **(Approved by Administrative Services Committee February 14, 2023)**

    Motion to approve with the funding source to be from the Fiscal Year '23 Capital Allocation as recommended by the Administrator.

    Motion made by Smith-McKnight, Seconded by Frantom.
    Voting Yea: Garrett, Johnson, Williams, Frantom, Scott, Smith-McKnight, Pulliam, Lewis, Guilfoyle

ENGINEERING SERVICES

11. Motion to **approve** bid award Bid Item 22-287 for Water Well Pumps and Motors to the Lowest Bidder - Wastewater Solutions LLC. **(Approved by Engineering Services Committee February 14, 2023)**

    Motion to approve.

Motion made by Garrett, Seconded by Frantom.
Voting Yea: Garrett, Johnson, Williams, Frantom, Scott, Smith-McKnight, Pulliam, Lewis, Guilfoyle

12. Motion to **approve** Duke's Root Control Bid 23-262 Chemical treatment of sanitary sewer lines for grease and roots. The initial term of the contract shall be for the period of one year to expire on December 31, 2023. The contract may be extended for four additional one-year periods with the mutual consent of the Owner and Contractor.**(Approved by Engineering Services Committee February 14, 2023)**

    Motion to approve.

    Motion made by Garrett, Seconded by Frantom.
    Voting Yea: Garrett, Johnson, Williams, Frantom, Scott, Smith-McKnight, Pulliam, Lewis, Guilfoyle

13. Motion to **approve** Sole Source Procurement of quarterly inspection and preventive maintenance of Hypochlorite Generation Equipment at an annual cost of $29,275.00.**(Approved by Engineering Services Committee February 14, 2023)**

    Motion to approve.

    Motion made by Garrett, Seconded by Frantom.
    Voting Yea: Garrett, Johnson, Williams, Frantom, Scott, Smith-McKnight, Pulliam, Lewis, Guilfoyle

14. **Motion to approve and authorize** Reallocation of Right of Way Maintenance Quick Strike $1miillion ARPA funds allocation as; i) $550,000.00 to Windsor Spring Landscaped segment Irrigation System Installation, ii) $265,000 to RCCI for Augusta Engineering Roadway & Drainage Vegetation Maintenance FY2023 Services (charge as service provided), and iii) $185,000 to Vacant Lot Cleanup Program. Also, approve directing Augusta Finance Department issuing Job Ledgers accordingly. **(Approved by Engineering Services Committee February 14, 2023)**

    Motion to approve.

    Motion made by Garrett, Seconded by Smith-McKnight.
    Voting Yea: Garrett, Johnson, Williams, Frantom, Scott, Smith-McKnight, Pulliam, Lewis, Guilfoyle

15. Motion to **approve** and Authorize allocating $800,000 from Street Lighting Program ARPA designated funds to Greene Street Lighting Reconstruction at segment between 5th Street & East Boundary. Requested by Engineering. **(Approved by Engineering Services Committee February 14, 2023)**

    Motion to approve.

    Motion made by Garrett, Seconded by Frantom.
    Voting Yea: Garrett, Johnson, Williams, Frantom, Scott, Smith-McKnight, Pulliam, Lewis, Guilfoyle

16. Motion to **approve** Purchase of Real Property located in the City of Augusta, Georgia comm known as 3305 Walton Way to be funded by Engineering Stormwater Program Funds and authorized by the Mayor and Clerk of Commission to execute all necessary documents under the direction of Augusta Law Department. Requested by Engineering.**(Approved by Engineering Services Committee February 14, 2023).**

    Motion to approve.

    Motion made by Garrett, Seconded by Frantom.
    Voting Yea: Garrett, Johnson, Williams, Frantom, Scott, Smith-McKnight, Pulliam, Lewis, Guilfoyle

17. Motion to **approve** Award of On-Call Professional Services for Field Engineering, Regulatory Compliance, Filed Operation Improvements, and Emergency Site Work Contract to Infrastructure Management Systems, subject to receipt of signed contract and proper insurance documents. The Contract is effective 1/1/2023 for three years with an option to renew for two additional one-year terms. Also, approve $250,000 to fund these Services. Requested by Engineering. RFP 22-304**(Approved by Engineering Services Committee February 14, 2023)**

    Motion to approve.

    Motion made by Garrett, Seconded by Frantom.
    Voting Yea: Garrett, Johnson, Williams, Frantom, Scott, Smith-McKnight, Pulliam, Lewis, Guilfoyle

18. Motion to **approve** of Change Order No. 1 to Blair Construction, Inc.'s contract to construct the Fort Gordon 15th Street Collector Sanitary Sewer.**(Approved by Engineering Services Committee February 14, 2023)**

    Motion to approve.

    Motion made by Garrett, Seconded by Frantom.
    Voting Yea: Garrett, Johnson, Williams, Frantom, Scott, Smith-McKnight, Pulliam, Lewis, Guilfoyle

19. **Motion to approve** and **receive as information** attached Exhibit A listed Emergency procured rental equipment for continuity of Environmental Services Operations and keep Solid Waste Facility in compliance (Landfill & Waste Collection) with its regulatory permit Operation & Maintenance requirements. **Requested by Engineering.(Approved by Engineering Services Committee February 14, 2023)**

    Motion to approve.

    Motion made by Garrett, Seconded by Frantom.
    Voting Yea: Garrett, Johnson, Williams, Frantom, Scott, Smith-McKnight, Pulliam, Lewis, Guilfoyle

20. **Approve** and **receive as information** attached Exhibit A listed Emergency procured equipment purchases & repairs for continuity of Environmental Services Operations and keep Solid Waste Facility in compliance (Landfill & Waste Collection) with its regulatory permit Operation & Maintenance requirements. **Requested by Engineering**

Motion to approve.

Motion made by Garrett, Seconded by Frantom.
Voting Yea: Garrett, Johnson, Williams, Frantom, Scott, Smith-McKnight, Pulliam, Lewis, Guilfoyle

21. Motion to **approve** Supplement funding (SA1) to Pond Company (Pond) in the amount of $22,884.40 for Sandpiper Lane and Morningside Drive Streambank Stabilization Construction Phase Services. **Requested by Engineering / RFP 19-152.(Approved by Engineering Services Committee February 14, 2023)**

    Motion to approve.

    Motion made by Garrett, Seconded by Frantom.
    Voting Yea: Garrett, Johnson, Williams, Frantom, Scott, Smith-McKnight, Pulliam, Lewis, Guilfoyle

22. **Motion to approve** attached Exhibit A listed Emergency procured Services for continuity of Environmental Services Operations and keep Solid Waste Facility in compliance (Landfill & Waste Collection) with its regulatory permit Operation & Maintenance requirements and maintain desirable level of service. **Requested by Engineering (Approved by Engineering Services Committee February 14, 2023)**

    Motion to approve.

    Motion made by Garrett, Seconded by Frantom.
    Voting Yea: Garrett, Johnson, Williams, Frantom, Scott, Smith-McKnight, Pulliam, Lewis, Guilfoyle

23. Motion **approve** Supplementing Downtown Receptacles Waste Hauling Contract for Removal & Disposal of "Contracted Non-Compliance Waste, Illegal Dumping and Recyclable Waste" Services to Coleman Sanitation. Also, approve **$150,000** to fund these Services. Requested by Engineering. Bid 19-135. Supplemental Agreement to expire 12/31/2025.**(Approved by Engineering Services Committee February 14, 2023)**

    Motion to approve.

    Motion made by Garrett, Seconded by Frantom.
    Voting Yea: Garrett, Johnson, Williams, Frantom, Scott, Smith-McKnight, Pulliam, Lewis, Guilfoyle

FINANCE

24. Motion **approve** Excess Workers' Compensation Insurance with Safety National Casualty with statutory limits and a $1,000,000 Self Insured Retention (SIR – otherwise known as the deductible) to cover all positions for a premium of $510,620.**(Approved by Finance Committee February 14, 2023)**

    Motion to approve.

    Motion made by Garrett, Seconded by Frantom.
    Voting Yea: Garrett, Johnson, Williams, Frantom, Scott, Smith-McKnight, Pulliam, Lewis

Guilfoyle

25. Motion to **approve** continued service with Workers Compensation Provider, CorVel, for renewal for Year 4.**(Approved by Finance Committee February 14, 2023).**

    Motion to approve.

    Motion made by Garrett, Seconded by Frantom.
    Voting Yea: Garrett, Johnson, Williams, Frantom, Scott, Smith-McKnight, Pulliam, Lewis, Guilfoyle

26. Motion to **approve** Augusta Commercial Property Insurance coverage for 2023 offered through Affiliated FM, current carrier, for a premium of $815,966 for full blanket coverage and limited flood coverage in flood prone areas.**(Approved by Finance Committee February 14, 2023).**

    Motion to approve.

    Motion made by Garrett, Seconded by Frantom.
    Voting Yea: Garrett, Johnson, Williams, Frantom, Scott, Smith-McKnight, Pulliam, Lewis, Guilfoyle

27. Motion to **approve** Insurance Brokerage Services for 2023 RFQ item #22-274 offered through Marsh McLennan Agency, to include Commercial Property Insurance (including Boiler and Machinery), Public Officials Liability /Employment Practices Liability (POL/EPL), and maintain the Surety Bond for Augusta, GA and additional services as requested.**(Approved by Finance Committee February 14, 2023).**

    Motion to approve.

    Motion made by Garrett, Seconded by Frantom.
    Voting Yea: Garrett, Johnson, Williams, Frantom, Scott, Smith-McKnight, Pulliam, Lewis, Guilfoyle

PUBLIC SAFETY

28. Motion to **approve** Accountability Court applying for FY 23 SAMHSA gran t**(Approved by Public Safety Committee February 14, 2023).**

    Motion to approve.

    Motion made by Garrett, Seconded by Frantom.
    Voting Yea: Garrett, Johnson, Williams, Frantom, Scott, Smith-McKnight, Pulliam, Lewis, Guilfoyle

29. Motion to **approve** the Agreement with Georgia Emergency Management & Homeland Security Agency and approve acceptance of the grant award in the amount of $30,000 (Grant No. 14) and authorized the Mayor to execute all required documents.**(Approved by Public Safety Committee February 14, 2023).**

    Motion to approve.

Motion made by Garrett, Seconded by Frantom.
Voting Yea: Garrett, Johnson, Williams, Frantom, Scott, Smith-McKnight, Pulliam, Lewis, Guilfoyle

30. Motion to **approve** award of Data Capture Contract to Kucera International Inc. in the amount of $179,180.00 for the capture of Light Detection and Ranging (LiDAR) Data & Mapping under Bid #23-128 **(Approved by Public Safety Committee February 14, 2023).**.

    Motion to approve.

    Motion made by Garrett, Seconded by Frantom.
    Voting Yea: Garrett, Johnson, Williams, Frantom, Scott, Smith-McKnight, Pulliam, Lewis, Guilfoyle

31. Motion to **approve** the award of Bid Item #22-291A Early Site Package for Soil Remediation – New Fire Station 3 to Kuhlke Construction & Associates, Inc.**(Approved by Public Safety Committee February 14, 2023).**

    Motion to approve.

    Motion made by Garrett, Seconded by Frantom.
    Voting Yea: Garrett, Johnson, Williams, Frantom, Scott, Smith-McKnight, Pulliam, Lewis, Guilfoyle

32. Motion to **approve** Accountability Court applying for FY 24 CACJ Grant.**(Approved by Public Safety Committee February 14, 2023).**

    Motion to approve.

    Motion made by Garrett, Seconded by Frantom.
    Voting Yea: Garrett, Johnson, Williams, Frantom, Scott, Smith-McKnight, Pulliam, Lewis, Guilfoyle

33. Motion to **approve** the acceptance of a $50,000 Learning Loss Grant from the United Way of Greater Atlanta for youth served through the Department of Family and Children Services.**(Approved by Public Safety Committee February 14, 2023).**

    Motion to approve.

    Motion made by Garrett, Seconded by Frantom.
    Voting Yea: Garrett, Johnson, Williams, Frantom, Scott, Smith-McKnight, Pulliam, Lewis, Guilfoyle

PETITIONS AND COMMUNICATIONS

34. Motion to approve the minutes of the Regular Commission Meeting held on February 7, 2023 and the Special Called Commission Meetings held on February 9 and 14, 2023.

    Motion to approve.

    Motion made by Garrett, Seconded by Frantom.
    Voting Yea: Garrett, Johnson, Williams, Frantom, Scott, Smith-McKnight, Pulliam, Lewis

Guilfoyle

APPOINTMENT(S)

35. Motion to **approve** the appointment of Mr. **Zelwin Davis** to the Augusta Planning Commission Representing District 4.

    Motion to approve.

    Motion made by Garrett, Seconded by Frantom.
    Voting Yea: Garrett, Johnson, Williams, Frantom, Scott, Smith-McKnight, Pulliam, Lewis, Guilfoyle

*******END CONSENT AGENDA*******
AUGUSTA COMMISSION

AUGUSTA COMMISSION
REGULAR AGENDA

(Items 36-39)

PLANNING

36. **Z-23-04** –A request for concurrence with the Augusta Georgia Planning Commission to **approve** a petition by Bobby Bagwell on behalf of Charles M. White – requesting a rezoning from **Zone R-1 (One-family Residential) to Zone R-3B** (Multi-family Residential) affecting properties containing approximately 7.6-acres located at 4449, 4451, 4453, 4455, 4457, 4459, 4461, 4463, 4465, 4467, and 4469 Windsor Spring Road. Tax Map #179-0-002-08-0, 179-0-002-07-0, 179-0-002-09-0, 179-0-002-10-0, 179-0-002-06-0, 179-0-002-05-0, 179-0-002-04-0, 179-0-002-11-0, 179-0-002-12-0, 179-0-002-13-0, and 179-0-002-03-0. **DISTRICT 5**

Motion to approve with the 22 foot lot widths to include the additional planning condition whereby the installation of all utilities must be consistent with the civil plans as submitted and that in the event that the plans and the installation are not consistent, the Engineering and the Utilities Departments reserve the right to request that the builder agrees to remove at their expense all improperly installed material.

Motion made by Garrett, Seconded by Smith-McKnight.
Voting Yea: Garrett, Johnson, Williams, Frantom, Scott, Smith-McKnight, Pulliam, Lewis, Guilfoyle

Substitute motion to maintain the 25 foot widths as recommended by Planning and Development. Motion made by Williams, Seconded by Johnson. This motion is withdrawn without objection by Mr. Williams due to the inclusion of the added condition in the original motion.

37. Motion to **approve** a request for concurrence with the Augusta Georgia Planning Commission to **approve** one amendment and one addition to the Planning Commission Bylaws & Rules of Procedure Section II:

    Motion to approve.

    Motion made by Garrett, Seconded by Frantom.
    Voting Yea: Garrett, Johnson, Williams, Frantom, Scott, Smith-McKnight, Pulliam, Lewis, Guilfoyle

OTHER BUSINESS

38. Motion to **ratify** Commission action at the **Special Called Meeting on February 14, 2023** relative to the motion regarding the Resolution for the settlement of claims for Ms. Adrienna Tolbert in the amount of $150,000.00.

    Motion to approve.

    Motion made by Garrett, Seconded by Frantom.
    Voting Yea: Garrett, Johnson, Williams, Frantom, Scott, Smith-McKnight, Pulliam, Lewis, Guilfoyle

LEGAL MEETING

A. Pending and Potential Litigation

B. Real Estate

C. Personnel

39. Motion to authorize execution by the Mayor of the affidavit of compliance with Georgia's Open Meeting Act.

    Motion to approve the execution of the closed meeting affidavit.

    Motion made by Frantom, Seconded by Lewis.
    Voting Yea: Garrett, Johnson, Williams, Frantom, Scott, Smith-McKnight, Pulliam, Lewis, Guilfoyle

ADDENDUM ITEMS:

1. Motion to go into an executive session.

Motion to go into an executive session for the discussion of pending or potential litigation.

Motion made by Williams, Seconded by Garrett.

Voting Yea: Garrett, Johnson, Williams, Frantom, Scott, Smith-McKnight, Pulliam, Lewis

Voting Abstain: Guilfoyle

2. Discuss Sequential Intercept Mapping Report. (Requested by Commissioner Jordan Johnson)

It was the consensus of the Commission that this item be added to the agenda without objection.

Motion to approve receiving this item as information.

Motion made by Johnson, Seconded by Garrett.

Voting Yea: Garrett, Johnson, Williams, Frantom, Scott, Smith-McKnight, Pulliam, Lewis, Guilfoyle.

CALLED MEETING

COMMISSION CHAMBER
February 28, 2023

Augusta Richmond County Commission convened at 11:00 a.m., Tuesday, February 28, 2023, the Honorable Garnett Johnson, Mayor, presiding.

PRESENT: Hons. Johnson, Williams, Mason, Frantom, Garrett, Scott, McKnight, Pulliam, Lewis and Guilfoyle, members of Augusta Richmond County Commission.

Mr. Mayor: I'd like to go ahead and call this meeting to order. Attorney Brown.

1. **LEGAL MEETING**
   A. **Pending and potential litigation**
   B. **Real estate**
   C. **Personnel**

Mr. Brown: Good morning, Mayor and Commissioners. We request a motion to go into executive session for the discussion of pending or potential litigation, personnel and real estate.

Ms. McKnight: So move.

Mr. Johnson: Second.

Mr. Mayor: I have a motion and a second, Madam Clerk. Voting.

Mr. Frantom out.
Motion carries 9-0.

Mr. Mayor: Thank you, Madam Clerk. We'll now move into executive session. Thank you.

[EXECUTIVE SESSION]

The Mayor called the meeting back to order.

2. **Motion to authorize execution by the Mayor of the affidavit of compliance with Georgia's Open Meeting Act.**

Mr. Brown: Thank you, Mayor Johnson, Commissioners. We request a motion to execute the closed meeting affidavit.

Mr. Frantom: So moved.

Ms. McKnight: Second.

Mr. Mayor: We have a motion and second. Voting.

Motion carries 10-0.

[MEETING ADJOURNED]

Lena J. Bonner
Clerk of Commission

CERTIFICATION:

I, Lena J. Bonner, Clerk of Commission, hereby certify that the above is a true and correct copy of the minutes of the Augusta Richmond Commission meeting held on February 28, 2023.

_____
Clerk of Commission

Augusta Commission Meeting

Tuesday, March 7, 2023

Strategic Planning Session Augusta's Stepping Up Initiative

Department:	Augusta Commission
Presenter:	Commissioner Jordan Johnson
Caption:	Motion to **approve** hosting Strategic Planning Session with UGA CVIOG relative to Augusta's Stepping Up Initiative and associated fees.
Background:	N/A
Analysis:	N/A
Financial Impact:	N/A
Alternatives:	N/A
Recommendation:	N/A
Funds are available in the following accounts:	N/A
REVIEWED AND APPROVED BY:	N/A

Lena Bonner

From: Commissioner Jordan Johnson
Sent: Monday, February 27, 2023 5:13 AM
To: Lena Bonner
Cc: Natasha L. McFarley; Nancy Morawski; Takiyah A. Douse
Subject: Full Commission Agenda Item

Good Morning,

Can you add to the agenda for next full commission,

"Motion to host Strategic planning session with the University of Georgia's Carl Vinson Institute of Government at a date deemed appropriate by both parties in regards to Augusta's Stepping Up Initiative and approve fees associated."

Please feel free to clean up the motion.

In Solidarity,

Jordan Johnson

Augusta Commission, District 1

Finance Committee - Chair

Administrative Services - Member

Downtown Development Authority - Ex-Officio

Liasion to the Richmond County School System

706-564-9356

augustaga.gov

"Our problems are manmade; therefore, they can be solved by man. No problem of human destiny is beyond human beings." - President John F. Kennedy

Commission Meeting

March 7, 2023

Band of Brothers Annual Juneteenth Celebration

Department:	N/A
Presenter:	N/A
Caption:	Discuss support for Band of Brothers Annual Juneteenth Celebration. (Requested by Commissioner Jordan Johnson)
Background:	N/A
Analysis:	N/A
Financial Impact:	N/A
Alternatives:	N/A
Recommendation:	N/A
Funds are available in the following accounts:	N/A
REVIEWED AND APPROVED BY:	N/A

Natasha L. McFarley

From: Commissioner Jordan Johnson
Sent: Monday, February 27, 2023 11:23 AM
To: Lena Bonner
Cc: Nancy Morawski; Natasha L. McFarley
Subject: Full Commission Agenda Item Request

Good Morning,

Will you please add to the next full commission meeting agenda

"Discuss support for Band of Brothers annual Juneteenth Celebration"

In Solidarity,

Jordan Johnson

Augusta Commission, District 1

Finance Committee - Chair

Administrative Services - Member

Downtown Development Authority - Ex-Officio

Liasion to the Richmond County School System

706-564-9356

augustaga.gov

"Our problems are manmade; therefore, they can be solved by man. No problem of human destiny is beyond human beings." - President John F. Kennedy

Augusta Commission Meeting

Tuesday, March 7, 2023

Request for financial support from the Irish Heritage Society

Department:	N/A
Presenter:	Mr. Sean Mooney
Caption:	Consider a request from **Mr. Sean Mooney** for financial support on behalf of the Irish Heritage Society in association with the 2023 St. Patrick's Day Parade. **(No Recommendation from Finance Committee on February 28, 2023)**
Background:	N/A
Analysis:	N/A
Financial Impact:	N/A
Alternatives:	N/A
Recommendation:	N/A
Funds are available in the following accounts:	N/A
REVIEWED AND APPROVED BY:	N/A

AGENDA ITEM REQUEST FORM

Commission meetings: First and third Tuesdays of each month – 2:00 p.m.
Committee meetings: Second and last Tuesdays of each month – 1:00 p.m.

Commission/Committee: (Please check one and insert meeting date)

____	Commission	Date of Meeting ____
X	Public Safety Committee	Date of Meeting 2/28/2023
____	Public Services Committee	Date of Meeting ____
____	Administrative Services Committee	Date of Meeting ____
____	Engineering Services Committee	Date of Meeting ____
____	Finance Committee	Date of Meeting ____

Contact Information for Individual/Presenter Making the Request:

Name: Sean Mooney on behalf of the Irish American Heritage Society
Address: 3307 Andover Ln. Augusta GA 30909
Telephone Number: 706 267 9735
Fax Number: —
E-Mail Address: sean@showpony.co (net.com)

Caption/Topic of Discussion to be placed on the Agenda:

Request of support of the Irish American Heritage Society's vibrant community and cultural outreach by waiving security fees associated with the annual St. Patrick's Day Parade.

Please send this request form to the following address:

Ms. Lena J. Bonner
Clerk of Commission
Suite 220 Municipal Building
535 Telfair Street
Augusta, GA 30901

Telephone Number: 706-821-1820
Fax Number: 706-821-1838
E-Mail Address: nmorawski@augustaga.gov

Requests may be faxed, e-mailed or delivered in person and must be received in the Clerk's Office no later than 9:00 a.m. on the Thursday preceding the Commission and Committee meetings of the following week. A five-minute time limit will be allowed for presentations.

Commission Meeting

March 7, 2023

Affidavit

Department:	N/A
Presenter:	N/A
Caption:	Motion to authorize execution by the Mayor of the affidavit of compliance with Georgia's Open Meeting Act.
Background:	N/A
Analysis:	N/A
Financial Impact:	N/A
Alternatives:	N/A
Recommendation:	N/A
Funds are available in the following accounts:	N/A
REVIEWED AND APPROVED BY:	N/A