CITY OF ANGLETON
ANGLETON BETTER LIVING CORPORATION AGENDA
120 S. CHENANGO STREET, ANGLETON, TEXAS 77515
MONDAY, OCTOBER 18, 2021 AT 5:30 PM

NOTICE IS HEREBY GIVEN PURSUANT TO V.T.C.A., GOVERNMENT CODE, CHAPTER 551, THAT THE ANGLETON BETTER LIVING CORPORATION WILL CONDUCT A MEETING, OPEN TO THE PUBLIC, ON MONDAY, OCTOBER 18, 2021, AT 5:30 P.M., AT THE CITY OF ANGLETON COUNCIL CHAMBERS LOCATED AT 120 S. CHENANGO STREET ANGLETON, TEXAS 77515.

1. Declaration of a quorum and call to order.

2. Discussion and possible action to approve the minutes of the Angleton Better Living Corporation meeting of June 28, 2021.

3. Discussion drainage updates.

4. Discussion on the ABLC and Recreation Center Preliminary YTD Financial Statements September 2021.

5. Discussion and possible action on projects for future Angleton Better Living Corporation bond capacity.

6. Discussion on Park and Recreation Administrative updates.

7. Discussion on Recreation Division updates.

8. Discussion on Parks Division updates.

9. Discussion and possible action on the proposed preliminary design services from Burditt Consultant LLC for Freedom Park and authorize the City Manager to execute the document upon legal review.

10. Discussion and possible action on an agreement with Kimley-Horn to develop Angleton's Park Design Standards and authorize the City Manager to execute the document upon legal review.

11. Discussion on an earthen hill to be included in the Freedom Park design.

12. Discussion on preliminary tree planting plan in collaboration with Trees for Houston.

13. Discussion and possible action on future park development.

14. Discussion and possible action on park development on Anderson, Kiber and other south side alternatives.

15. Discussion and possible action on closing Chenango between County parking lot access and egress allowing for Veterans Park expansion.

16. Discussion and possible action on funding field five lights at Bates Park softball complex.

ADJOURNMENT

CERTIFICATION

I, Frances Aguilar, City Secretary, do hereby certify that this Notice of a Meeting was posted on the City Hall bulletin board, a place convenient and readily accessible to the general public at all times and to the City's website, www.angleton.tx.us, in compliance with Chapter 551, Texas Government Code. The said Notice was posted on the following date and time: Friday, October 15, 2021 by 5:30 p.m. and remained so posted continuously for at least 72 hours proceeding the scheduled time of said meeting.

/S/ Frances Aguilar
Frances Aguilar, TRMC, MMC
City Secretary

In compliance with the Americans with Disabilities Act, the City of Angleton will provide reasonable accommodations for persons attending City Council meetings. The facility is wheelchair accessible and accessible parking spaces are available. Please contact the City Secretary at 979-849-4364, extension 2115 or email citysecretary@angleton.tx.us.

AGENDA ITEM SUMMARY FORM

MEETING DATE: October 18, 2021

PREPARED BY: Frances Aguilar

AGENDA CONTENT: Discussion and possible action to approve the minutes of the Angleton Better Living Corporation meeting of June 28, 2021.

AGENDA ITEM SECTION: Regular Agenda

BUDGETED AMOUNT: EnterTextHere **FUNDS REQUESTED:** EnterTextHere

FUND: EnterTextHere

EXECUTIVE SUMMARY:

Staff is presenting the following minutes for approval: Angleton Better Living Corporation meeting of June 28, 2021.

RECOMMENDATION:

Staff recommends Council approve the minutes as presented.

CITY OF ANGLETON
ANGLETON BETTER LIVING CORPORATION MINUTES
120 S. CHENANGO STREET, ANGLETON, TEXAS 77515
MONDAY, JUNE 28, 2021 AT 6:00 PM

THE FOLLOWING REPRESENTS THE ACTIONS TAKEN BY ANGLETON BETTER LIVING CORPORATION IN THE ORDER THEY OCCURRED DURING THE MEETING. THE CITY COUNCIL OF ANGLETON, TEXAS CONVENED IN A SPECIAL MEETING ON TUESDAY, AUGUST 10, 2021, AT 6:00 P.M., IN THE ANGLETON CITY HALL COUNCIL CHAMBERS, 120 S. CHENANGO, ANGLETON, TEXAS.

DECLARATION OF A QUORUM AND CALL TO ORDER

With a quorum present, Vice Chair Wright called the Council Meeting to order at 6:02 P.M

PRESENT
Vice Chair John Wright
Director Ellen Eby
Director Chris Peltier
Director Charlyn Rogers

ABSENT
Chairman Jason Perez
Director William Jackson
Director George Rau

REGULAR AGENDA

1. Discussion on installation of the Henderson Road 48" Culverts and upgrades to Levy at Sewer Plant.

   Update was provided by Chris Whittaker, City Manager.

2. Discussion on the ABLC and Recreation Center YTD Financial Statements May 2021.

   Update was provided by Chris Hill, Director of Finance.

3. Discussion on Recreation Division updates.

   Update was provided by Geri Gonzales, Recreation Superintendent.

4. Discussion on Parks Division updates.

   Update was provided by Stewart Crouch, Parks Superintendent.

5. Discussion on the Parks & Recreation Department personnel.

   Update was provided by Megan Mainer, Director of Parks & Recreation.

6. Discuss and provide comment on the draft Capital Improvements Plan (CIP).

   Update was provided by Chris Whittaker, City Manager.

7. Discuss and provide comment on the preliminary Parks, Right-of-Way, and Recreation division budgets for fiscal years 2021-2022.

   Update was provided by Chris Whittaker, City Manager.

8. Discussion and possible action on Angleton Recreation Center Plaza renovations and other projects through the ABLC contingency fund.

   Upon a motion by Director Eby and seconded by Director Rogers, ABLC approved to fund the resurface of the pavilion at BG Peck and to renovate the plaza, pool manager's office and kitchen out of contingency fund. The motion passed on a 5-0 vote.

9. Discussion and possible action on park land use for future park development.

   No action taken.

ADJOURNMENT

The meeting was adjourned at 8:30 P.M.

These minutes were approved by Angleton City Council on this the 18th day of October 2021, upon a motion by XX, seconded by XX. The motion passed on a 6-0 vote.

CITY OF ANGLETON, TEXAS

_____
Jason Perez
Chair

ATTEST:

_____
Frances Aguilar, TRMC, MMC
City Secretary

AGENDA ITEM SUMMARY FORM

MEETING DATE: 10/18/2021

PREPARED BY: Jeff Sifford, Director of Public Works

AGENDA CONTENT: Discussion drainage updates.

AGENDA ITEM SECTION: Regular Agenda

BUDGETED AMOUNT: $0 **FUNDS REQUESTED:** $0

FUND: NA

EXECUTIVE SUMMARY:

Staff will update ABLC on drainage updates throughout the City.

RECOMMENDATION:

NA

AGENDA ITEM SUMMARY FORM

MEETING DATE: 10/18/2021

PREPARED BY: Chris Hill, Finance Director

AGENDA CONTENT: Discussion on the ABLC and Recreation Center Preliminary YTD Financial Statements September 2021

AGENDA ITEM SECTION: Discussion only

BUDGETED AMOUNT: N/A **FUNDS REQUESTED:** N/A

FUND: N/A

EXECUTIVE SUMMARY:

Sales Tax is received 2 months behind resulting in ABLC deficit. YTD Sales tax is up .07% over last year after August payment. The last sales tax payment for 2021 will be received in November 2021.

Recreation Center revenue was down early in this year due to COVID; however, the current revenue trends are positive, and expenses are down YTD to partially offset shortfall compared to budget. Recreation Fund Balance was transferred to cover the roof project of $217,127. However, repairs to Recreation Center and Center Exit Doors that were previously approved have not yet been funded due to insufficient fund balance.

ATTACHMENTS:

Sales Tax History; Fund Balance unaudited; ABLC and Recreation Center Preliminary YTD 2021 Financials; Debt Schedule.

RECOMMENDATION:

Staff recommends Board review and provide any feedback or questions on the Preliminary Financial Statements through September 2021.

ANGLETON SALES TAX HISTORY UNADJUSTED

	2015-2016	2016-2017	2017-2018	2018-2019	2019-2020	2020-2021	Pct. Inc.
DECEMBER	$314,817.06	$304,908.30	$347,354.43	$434,749.51	$385,792.83	$395,348.74	
		-3.15%	*13.92%*	*25.16%*	*-11.26%*	*2.48%*	2.48%
JANUARY	$273,656.20	$296,996.27	$329,777.44	$403,846.68	$338,172.05	$354,845.49	
		8.53%	*11.04%*	*22.46%*	*-16.26%*	*4.93%*	3.62%
FEBRUARY	**$356,075.87**	**$415,244.01**	**$492,147.05**	**$453,394.60**	**$502,313.60**	**$548,392.34**	
		16.62%	*18.52%*	*-7.87%*	*10.79%*	*9.17%*	5.90%
MARCH	$309,730.23	$312,233.83	$317,117.11	$342,054.74	$313,328.18	$340,598.43	
		0.81%	*1.56%*	*7.86%*	*-8.40%*	*8.70%*	6.47%
APRIL	$297,144.05	$303,767.07	$310,708.52	$282,052.01	$406,685.75	$342,899.91	
		2.23%	*2.29%*	*-9.22%*	*44.19%*	*-15.68%*	1.84%
MAY	**$400,719.77**	**$373,951.85**	**$435,287.54**	***$368,579.42***	**$419,504.03**	**$514,532.66**	
		-6.68%	*16.40%*	*-15.33%*	*13.82%*	*22.65%*	**5.53%**
JUNE	$425,295.40	$333,984.63	$345,348.15	*$317,905.52*	$404,805.22	$430,962.90	
		-21.47%	*3.40%*	*-7.95%*	*27.34%*	*6.46%*	**5.67%**
JULY	$309,325.50	$330,412.36	$378,810.31	*$307,993.53*	$402,028.15	$389,114.38	
		6.82%	*14.65%*	*-18.69%*	*30.53%*	*-3.21%*	**4.54%**
AUGUST	**$401,219.73**	**$369,257.32**	**$432,811.12**	***$460,450.05***	**$695,431.21**	**$480,908.02**	
		-7.97%	*17.21%*	*6.39%*	*51.03%*	*-30.85%*	**-1.82%**
SEPTEMBER	$310,412.80	$339,260.34	$388,718.53	*$377,286.02*	$363,041.73	$398,830.06	
		9.29%	*14.58%*	*-2.94%*	*-3.78%*	*9.86%*	**-0.82%**
OCTOBER	$353,383.54	$289,957.54	$386,110.84	*$359,596.83*	*$366,433.12*	$404,326.78	
		-17.95%	*33.16%*	*-6.87%*	*1.90%*	*10.34%*	0.07%
NOVEMBER	**$ 390,214.75**	**$ 410,226.68**	**$400,639.93**	**$ 428,916.34**	**$ 443,840.94**	$476,685.17	***estimate***
		5.13%	*-2.34%*	*7.06%*	*3.48%*	*7.40%*	
Total	$4,141,994.90	$4,080,200.20	$4,564,830.97	$4,536,825.25	$5,041,376.81	$5,077,444.88	
Pct. Increase		-1.49%	11.88%	-0.61%	11.12%	0.72%	
Dollar Increase		-$61,794.70	$484,630.77	-$28,005.72	$504,551.56	$36,068.07	
General Fund	$2,761,329.94	$2,720,133.47	$3,043,220.65	$3,024,550.17	$3,360,917.87	$3,384,963.25	
Increase		($41,196.47)	$323,087.18	($18,670.48)	$336,367.71	$24,045.38	
ABLC Fund	$1,380,664.97	$1,360,066.73	$1,521,610.32	$1,512,275.08	$1,680,458.94	$1,692,481.63	
Increase		($20,598.23)	$161,543.59	($9,335.24)	$168,183.85	$12,022.69	

ANGLETON SALES TAX HISTORY ADJUSTED FOR AUDIT AUGUST, 2021

	2015-2016	2016-2017	2017-2018	2018-2019	2019-2020	2020-2021	Pct. Inc.	5YR AVG
DECEMBER	$314,817.06	$304,908.30	$347,354.43	$434,749.51	$385,792.83	$395,348.74		$357,524.43
		-3.15%	*13.92%*	*25.16%*	*-11.26%*	*2.48%*	2.48%	
JANUARY	$273,656.20	$296,996.27	$329,777.44	$403,846.68	$338,172.05	$354,845.49		$328,489.73
		8.53%	*11.04%*	*22.46%*	*-16.26%*	*4.93%*	3.62%	
FEBRUARY	**$356,075.87**	**$415,244.01**	**$492,147.05**	**$453,394.60**	**$502,313.60**	**$548,392.34**		$443,835.03
		16.62%	*18.52%*	*-7.87%*	*10.79%*	*9.17%*	5.90%	
MARCH	$309,730.23	$312,233.83	$317,117.11	$342,054.74	$313,328.18	$340,598.43		$318,892.82
		0.81%	*1.56%*	*7.86%*	*-8.40%*	*8.70%*	6.47%	
APRIL	$297,144.05	$303,767.07	$310,708.52	$282,052.01	$406,685.75	$342,899.91		$320,071.48
		2.23%	*2.29%*	*-9.22%*	*44.19%*	*-15.68%*	1.84%	
MAY	**$400,719.77**	**$373,951.85**	**$435,287.54**	***$368,579.42***	**$419,504.03**	**$514,532.66**		$399,608.52
		-6.68%	*16.40%*	*-15.33%*	*13.82%*	*22.65%*	5.53%	
JUNE	$425,295.40	$333,984.63	$345,348.15	*$317,905.52*	$404,805.22	$430,962.90		$365,467.78
		-21.47%	*3.40%*	*-7.95%*	*27.34%*	*6.46%*	5.67%	
JULY	$309,325.50	$330,412.36	$378,810.31	*$307,993.53*	$402,028.15	$389,114.38		$345,713.97
		6.82%	*14.65%*	*-18.69%*	*30.53%*	*-3.21%*	4.54%	
AUGUST	**$401,219.73**	**$369,257.32**	**$432,811.12**	***$460,450.05***	**$468,858.23** *	**$480,908.02**		$426,519.29
		-7.97%	*17.21%*	*6.39%*	*1.83%*	*2.57%*	4.29%	
SEPTEMBER	$310,412.80	$339,260.34	$388,718.53	*$377,286.02*	$363,041.73	$398,830.06		$355,743.88
		9.29%	*14.58%*	*-2.94%*	*-3.78%*	*9.86%*	4.79%	
OCTOBER	$353,383.54	$289,957.54	$386,110.84	*$359,596.83*	*$366,433.12*	$404,326.78		$351,096.37
		-17.95%	*33.16%*	*-6.87%*	*1.90%*	*10.34%*	5.26%	
NOVEMBER	**$ 390,214.75**	**$ 410,226.68**	**$400,639.93**	**$428,916.34**	**$443,840.94**	$476,685.17	***estimate***	$414,767.73
		5.13%	*-2.34%*	*7.06%*	*3.48%*	*7.40%*		
Total	$4,141,994.90	$4,080,200.20	$4,564,830.97	$4,536,825.25	$4,814,803.83	$5,077,444.88		$4,427,731.03
Pct. Increase		-1.49%	11.88%	-0.61%	6.13%	5.45%		
Dollar Increase		-$61,794.70	$484,630.77	-$28,005.72	$277,978.58	$262,641.05		
General Fund	$2,761,329.94	$2,720,133.47	$3,043,220.65	$3,024,550.17	$3,209,869.22	$3,384,963.25		
Increase		($41,196.47)	$323,087.18	($18,670.48)	$185,319.05	$175,094.03		
ABLC Fund	$1,380,664.97	$1,360,066.73	$1,521,610.32	$1,512,275.08	$1,604,934.61	$1,692,481.63		
Increase		($20,598.23)	$161,543.59	($9,335.24)	$92,659.53	$87,547.02		

BALANCE SHEET
AS OF: SEPTEMBER 30TH, 2021

40 -ANGLETON BETTER LIVING

ACCOUNT#	TITLE			
ASSETS				
CASH				
100-100	BANK ACCOUNT	0.00		
100-101	INVESTMENT-LONE STAR	54,277.60		
100-103	ABLC-FSB-LOUISE	1,035,496.71		
100-121	DUE FROM GENERAL FUND	0.00		
100-199	DUE FROM POOLED CASH	(670,167.32)		
			419,606.99	
RECEIVABLES				
100-470	ACCT RECEIVABLE-SALES TAX	134,775.59		
			134,775.59	
TOTAL ASSETS				554,382.58

BALANCE SHEET
AS OF: SEPTEMBER 30TH, 2021

40 -ANGLETON BETTER LIVING

ACCOUNT#	TITLE			
LIABILITIES & FUND BALANCE				
VENDORS PAYABLE				
200-100	ACCOUNTS PAYABLE	0.00		
200-101	DUE TO GENERAL FUND	0.00		
200-119	DUE TO LAKESIDE PARK	0.00		
			0.00	
	TOTAL LIABILITIES			0.00
EQUITY				
400-999	FUND BALANCE	738,022.16		
	SURPLUS (DEFECIT)	(183,639.58)		
	TOTAL EQUITY		554,382.58	
	TOTAL LIABILITIES & FUND EQUITY			554,382.58

BALANCE SHEET
AS OF: SEPTEMBER 30TH, 2021

60 -ANGLETON ACTIVITY CENTER

ACCOUNT#	TITLE			
ASSETS				
CASH				
100-104	DUE FROM ABLC	0.00		
100-145	FEMA (IKE) PAYROLL REIMBUR	0.00		
100-199	DUE FROM POOL CASH	14,952.62		
			14,952.62	
INVESTMENTS				
100-200	A/R LOAN PROCEEDS	0.00		
			0.00	
RECEIVABLES				
100-466	A/R EMPLY FICA&MED OWED	0.00		
			0.00	
TOTAL ASSETS				14,952.62

BALANCE SHEET
AS OF: SEPTEMBER 30TH, 2021

60 -ANGLETON ACTIVITY CENTER

ACCOUNT#	TITLE			
LIABILITIES & FUND BALANCE				
VENDORS PAYABLE				
200-100	ACCOUNTS PAYABLE	0.00		
200-151	ACCURED WAGES & EXP	27,657.66		
200-199	DUE TO OTHER FUNDS	0.00		
			27,657.66	
COMPENSATION PAYABLE				
200-200	RETAINAGE PAYABLE	0.00		
200-205	TAXES PAYABLE	2,566.93		
200-210	TMRS PAYABLE	0.00		
200-213	VISION INSURANCE PAYABLE	0.00		
200-215	HEALTH INS. PAYABLE	0.00		
200-216	DENTAL INSURANCE PAYABLE	0.00		
200-217	LIFE INSURANCE PAYABLE	0.00		
200-218	LEGAL INSURANCE PAYABLE	0.00		
200-220	CHILD SUPPORT PAYABLE	0.00		
200-260	GARNISHMENT	0.00		
200-275	MISCELLANEOUS PAYABLE	0.00		
			2,566.93	
MISCELLANEOUS PAYABLES				
200-485	REC-LEAGUE-CONTRACTS PAYAB	5,057.95		
200-486	ARC MEMBERSHIP CREDITS	62.00		
			5,119.95	
	TOTAL LIABILITIES			35,344.54
EQUITY				
400-999	FUND BALANCE	50,429.06		
	SURPLUS (DEFECIT)	(70,820.98)		
	TOTAL EQUITY		(20,391.92)	
	TOTAL LIABILITIES & FUND EQUITY			14,952.62

C I T Y O F A N G L E T O N
STATEMENT OF REVENUES & EXPENDITURES
ANGLETON BETTER LIVING
AS OF:SEPTEMBER 30TH, 2021

	BUDGET	Y-T-D ACTUAL	% BUDGET
REVENUES			
MISCELLANEOUS	1,746,321.00	1,535,868.06	87.95
FUND TOTAL REVENUES	1,746,321.00	1,535,868.06	87.95
OTHER SOURCES			
TRANSFER FROM FUND BALANCE	150,000.00	150,000.00	100.00
2018 DEBT ISSUE	0.00	0.00	0.00
TOTAL OTHER SOURCES	150,000.00	150,000.00	100.00
TOTAL RESOURCES	1,896,321.00	1,685,868.06	88.90
EXPENDITURES			
06-MAINTENANCE DEPT.	1,896,321.00	1,869,507.64	98.59
TOTAL EXPENDITURES	1,896,321.00	1,869,507.64	98.59
TOTAL SURPLUS OR (DEFICIT)	0.00	(183,639.58)	0.00

C I T Y O F A N G L E T O N
STATEMENT OF REVENUES & EXPENDITURES
ANGLETON ACTIVITY CENTER
AS OF:SEPTEMBER 30TH, 2021

	BUDGET	Y-T-D ACTUAL	% BUDGET
REVENUES			
PARKS & RECREATION	1,081,059.00	1,048,558.82	96.99
MISCELLANEOUS	83,370.00	44,585.80	53.48
FUND TOTAL REVENUES	1,164,429.00	1,093,144.62	93.88
OTHER SOURCES			
TRANSFER FROM FUND BALANCE	44,631.00	217,127.00	486.49
TRANSFER FROM WATER	0.00	0.00	0.00
TOTAL OTHER SOURCES	44,631.00	217,127.00	486.49
TOTAL RESOURCES	1,209,060.00	1,310,271.62	108.37
EXPENDITURES			
06-MAINTENANCE DEPT.	1,209,060.00	1,381,092.60	114.23
TOTAL EXPENDITURES	1,209,060.00	1,381,092.60	114.23
TOTAL SURPLUS OR (DEFICIT)	0.00	(70,820.98)	0.00

REVENUE & EXPENSE REPORT (UNAUDITED)

AS OF: SEPTEMBER 30TH, 2021

40 -ANGLETON BETTER LIVING

% OF YEAR COMPLETED: 100.00

REVENUES	CURRENT BUDGET	CURRENT PERIOD	YEAR TO DATE ACTUAL	TOTAL ENCUMBERED	BUDGET BALANCE	% YTD BUDGET
MISCELLANEOUS						
40-300-800 INTEREST INCOME	3,900	0.00	2,281.50	0.00	1,618.50	58.50
40-300-801 SALES TAX PORTION	1,742,421	428,021.61	1,533,586.56	0.00	208,834.44	88.01
40-300-899 MISCELLANEOUS INCOME	0	0.00	0.00	0.00	0.00	0.00
TOTAL MISCELLANEOUS	1,746,321	428,021.61	1,535,868.06	0.00	210,452.94	87.95
TRANSFERS						
40-300-900 TRANSFER FROM FUND BALANCE	150,000	37,500.00	150,000.00	0.00	0.00	100.00
40-300-921 2018 DEBT ISSUE	0	0.00	0.00	0.00	0.00	0.00
TOTAL TRANSFERS	150,000	37,500.00	150,000.00	0.00	0.00	100.00
TOTAL REVENUE	1,896,321	465,521.61	1,685,868.06	0.00	210,452.94	88.90

REVENUE & EXPENSE REPORT (UNAUDITED)

AS OF: SEPTEMBER 30TH, 2021

40 -ANGLETON BETTER LIVING

DEPARTMENT - 06-MAINTENANCE DEPT. % OF YEAR COMPLETED: 100.00

DEPARTMENTAL EXPENDITURES		CURRENT BUDGET	CURRENT PERIOD	YEAR TO DATE ACTUAL	TOTAL ENCUMBERED	BUDGET BALANCE	% YTD BUDGET
SERVICES							
40-506-415	ABL-LEGAL & PROFESSIONAL	2,500	0.00	1,234.00	0.00	1,266.00	49.36
40-506-425	TRAVEL AND TRAINING	1,500	0.00	0.00	0.00	1,500.00	0.00
40-506-498	TRANSFER TO FUND BALANCE	0	0.00	0.00	0.00	0.00	0.00
TOTAL SERVICES		4,000	0.00	1,234.00	0.00	2,766.00	30.85
MISCELLANEOUS							
40-506-520	ABL-CONTINGENCY	54,107	30,059.64	30,059.64	5,938.80	18,108.56	66.53
40-506-599	MISCELLANEOUS EXPENSE	0	0.00	0.00	0.00	0.00	0.00
TOTAL MISCELLANEOUS		54,107	30,059.64	30,059.64	5,938.80	18,108.56	66.53
CAPITAL EXPENDITURES							
40-506-605	LAND ACQUISITION	0	0.00	0.00	0.00	0.00	0.00
40-506-615	ABL-INFRASTRUCTURE	0	0.00	0.00	0.00	0.00	0.00
TOTAL CAPITAL EXPENDITURES		0	0.00	0.00	0.00	0.00	0.00
OTHER							
40-506-700	TRANSFER TO FUND BALANCE	0	0.00	0.00	0.00	0.00	0.00
40-506-701	TRANSFER TO GENERAL FUND	378,414	94,914.00	378,414.00	0.00	0.00	100.00
40-506-705	TRANSFER TO DEBT SERVICE	681,336	0.00	681,336.00	0.00	0.00	100.00
40-506-719	TRANSF-LAKESIDE PARK CAPI	0	0.00	0.00	0.00	0.00	0.00
40-506-743	TRANSFER TO PARKS FUND	0	0.00	0.00	0.00	0.00	0.00
40-506-751	TRANSFER TO REC CENTER IN	0	0.00	0.00	0.00	0.00	0.00
40-506-752	TRANSFER TO REC-MO CAPITA	0	0.00	0.00	0.00	0.00	0.00
40-506-760	TRANSFER TO ACT CTR OP FU	778,464	194,619.00	778,464.00	0.00	0.00	100.00
40-506-762	TRANSFER TO FREEDOM PARK	0	0.00	0.00	0.00	0.00	0.00
TOTAL OTHER		1,838,214	289,533.00	1,838,214.00	0.00	0.00	100.00
TOTAL 06-MAINTENANCE DEPT.		1,896,321	319,592.64	1,869,507.64	5,938.80	20,874.56	98.90
TOTAL EXPENDITURES		1,896,321	319,592.64	1,869,507.64	5,938.80	20,874.56	98.90
REVENUE OVER/(UNDER) EXPENDITURES		0	145,928.97	(183,639.58)	(5,938.80)	189,578.38	0.00

REVENUE & EXPENSE REPORT (UNAUDITED)

AS OF: SEPTEMBER 30TH, 2021

60 -ANGLETON ACTIVITY CENTER

% OF YEAR COMPLETED: 100.00

REVENUES	CURRENT BUDGET	CURRENT PERIOD	YEAR TO DATE ACTUAL	TOTAL ENCUMBERED	BUDGET BALANCE	% YTD BUDGET
PARKS & RECREATION						
60-300-711 FAMILY MEMBERSHIP	55,500	0.00	49,764.94	0.00	5,735.06	89.67
60-300-712 INDIVIDUAL MEMBERSHIP	43,500	0.00	28,813.94	0.00	14,686.06	66.24
60-300-713 SENIOR MEMBERSHIPS	48,750	257.00	35,821.19	0.00	12,928.81	73.48
60-300-715 ROOM RENTAL FEES	37,500	0.00	22,826.00	0.00	14,674.00	60.87
60-300-716 DAILY ENTRY FEE	112,500	0.00	125,992.25	0.00	(13,492.25)	111.99
60-300-717 OTHER	948	0.00	561.50	0.00	386.50	59.23
60-300-718 MEMBERSHIP YOUTH	1,500	0.00	2,410.00	0.00	(910.00)	160.67
60-300-719 MILITARY MEMBERSHIPS	2,400	0.00	3,905.00	0.00	(1,505.00)	162.71
60-300-740 TRANSFER FROM ABLC	778,461	194,619.00	778,464.00	0.00	(3.00)	100.00
60-300-741 TRANSFER FROM ABL-MO CAPITAL	0	0.00	0.00	0.00	0.00	0.00
60-300-750 LOAN PROCEEDS	0	0.00	0.00	0.00	0.00	0.00
60-300-751 TRANSFER FROM ABLC-INFRACT	0	0.00	0.00	0.00	0.00	0.00
TOTAL PARKS & RECREATION	1,081,059	194,876.00	1,048,558.82	0.00	32,500.18	96.99
MISCELLANEOUS						
60-300-800 INTEREST	75	0.00	136.85	0.00	(61.85)	182.47
60-300-801 TRANSFER FROM SWIMMING POOL	0	0.00	0.00	0.00	0.00	0.00
60-300-802 FEMA REIMBURSEMENTS-HARVEY	0	0.00	0.00	0.00	0.00	0.00
60-300-805 DONATIONS	0	0.00	0.00	0.00	0.00	0.00
60-300-811 GENERAL PROGRAMS	3,750	0.00	518.75	0.00	3,231.25	13.83
60-300-813 YOUTH CAMPS	53,224	0.00	34,866.50	0.00	18,357.50	65.51
60-300-814 COMMUNITY SPECIAL/EVENTS	1,775	0.00	165.00	0.00	1,610.00	9.30
60-300-815 FATHER DAUGHTER DANCE	3,546	0.00	0.00	0.00	3,546.00	0.00
60-300-816 HEALTH AND WELLNESS	5,625	0.00	0.00	0.00	5,625.00	0.00
60-300-817 SENIOR PROGRAMS	10,875	0.00	2,796.00	0.00	8,079.00	25.71
60-300-818 MICELLANEOUS PROGRAMS	2,250	0.00	981.75	0.00	1,268.25	43.63
60-300-820 CASH OVER/SHORT	0	0.00	118.73	0.00	(118.73)	0.00
60-300-899 MISCELLANEOUS	2,250	0.00	5,002.22	0.00	(2,752.22)	222.32
TOTAL MISCELLANEOUS	83,370	0.00	44,585.80	0.00	38,784.20	53.48
TRANSFERS						
60-300-900 TRANSFER FROM FUND BALANCE	44,631	0.00	217,127.00	0.00	(172,496.00)	486.49
60-300-903 TRANSFER FROM WATER	0	0.00	0.00	0.00	0.00	0.00
TOTAL TRANSFERS	44,631	0.00	217,127.00	0.00	(172,496.00)	486.49

REVENUE & EXPENSE REPORT (UNAUDITED)

AS OF: SEPTEMBER 30TH, 2021

60 -ANGLETON ACTIVITY CENTER

DEPARTMENT - 06-MAINTENANCE DEPT. % OF YEAR COMPLETED: 100.00

DEPARTMENTAL EXPENDITURES		CURRENT BUDGET	CURRENT PERIOD	YEAR TO DATE ACTUAL	TOTAL ENCUMBERED	BUDGET BALANCE	% YTD BUDGET
PERSONNEL SERVICES							
60-506-105	REC CENTER - SALARIES	320,005	46,352.49	355,879.19	0.00	(35,874.19)	111.21
60-506-106	REC CENTER - PT SALARIES	243,006	17,876.76	216,317.39	0.00	26,688.61	89.02
60-506-108	REC CENTER - STEP RAISE	0	0.00	0.00	0.00	0.00	0.00
60-506-109	REC CENTER - STIPEND	0	0.00	0.00	0.00	0.00	0.00
60-506-110	REC CENTER - OVERTIME	3,500	1,332.96	4,409.58	0.00	(909.58)	125.99
60-506-115	REC CENTER - LONGEVITY	1,560	0.00	1,020.00	0.00	540.00	65.38
60-506-120	REC CENTER - HURRICANE OT	0	0.00	0.00	0.00	0.00	0.00
60-506-121	REC CENTER - HURRICANE	0	0.00	0.00	0.00	0.00	0.00
60-506-126	REC CENTER - CERTIFICATIO	7,200	778.92	5,264.85	0.00	1,935.15	73.12
60-506-135	REC CENTER - FICA	43,529	5,075.43	44,228.50	0.00	(699.50)	101.61
60-506-140	REC CENTER - HEALTH INS	104,982	6,288.44	75,529.74	0.00	29,452.26	71.95
60-506-141	REC CENTER - INS SUBSIDY	3,971	0.00	0.00	0.00	3,971.00	0.00
60-506-142	REC CENTER - INS COMMISSI	1,266	0.00	0.00	0.00	1,266.00	0.00
60-506-143	REC CENTER- PHONE ALLOWAN	720	180.00	300.00	0.00	420.00	41.67
60-506-145	REC CENTER - WORKER'S COM	12,000	0.00	4,213.54	0.00	7,786.46	35.11
60-506-150	REC CENTER - UNEMPLOYMENT	0	0.00	1,787.54	0.00	(1,787.54)	0.00
60-506-155	REC CENTER - RETIREMENT	40,163	6,084.69	42,250.18	0.00	(2,087.18)	105.20
60-506-165	REC CENTER - MEDICAL EXPE	1,192	460.00	2,075.00	0.00	(883.00)	174.08
60-506-185	REC CENTER - PAYROLL ACCR	0	0.00	0.00	0.00	0.00	0.00
TOTAL PERSONNEL SERVICES		783,094	84,429.69	753,275.51	0.00	29,818.49	96.19
SUPPLIES							
60-506-203	REC CENT - APPAREL	2,600	2,228.48	2,330.45	0.00	269.55	89.63
60-506-205	GENERAL SUPPLIES	5,500	382.21	3,317.17	0.00	2,182.83	60.31
60-506-206	CHEMICAL SUPPLIES	21,000	4,520.30	21,298.53	0.00	(298.53)	101.42
60-506-210	OFFICE SUPPLIES	6,500	757.02	5,101.70	0.00	1,398.30	78.49
60-506-212	CLEANING SUPPLIES	11,000	565.16	8,714.53	27.88	2,257.59	79.48
60-506-215	POOL SUPPLIES	3,000	266.41	1,316.29	0.00	1,683.71	43.88
60-506-216	VEHICLE SUPPLY(GAS)	2,500	(118.03)	970.07	0.00	1,529.93	38.80
60-506-220	EQUIPMENT SUPPLIES	4,500	84.50	3,572.89	0.00	927.11	79.40
TOTAL SUPPLIES		56,600	8,686.05	46,621.63	27.88	9,950.49	82.42
REPAIR & MAINTENANCE							
60-506-310	EQUIPMENT	0	0.00	0.00	0.00	0.00	0.00
60-506-315	POOL MAINTENANCE	29,500	2.20	6,792.69	1,403.00	21,304.31	27.78
60-506-316	COMPUTER MAINTENANCE	16,200	1,683.19	14,327.94	500.00	1,372.06	91.53

REVENUE & EXPENSE REPORT (UNAUDITED)

AS OF: SEPTEMBER 30TH, 2021

60 -ANGLETON ACTIVITY CENTER

DEPARTMENT - 06-MAINTENANCE DEPT. % OF YEAR COMPLETED: 100.00

DEPARTMENTAL EXPENDITURES		CURRENT BUDGET	CURRENT PERIOD	YEAR TO DATE ACTUAL	TOTAL ENCUMBERED	BUDGET BALANCE	% YTD BUDGET
SERVICES							
60-506-405	TELEPHONE	850	60.00	840.00	0.00	10.00	98.82
60-506-410	UTILITIES	90,000	13,839.54	70,738.44	0.00	19,261.56	78.60
60-506-412	GENERAL PROGRAMS	4,746	0.00	2,576.47	0.00	2,169.53	54.29
60-506-413	YOUTH CAMPS	19,200	0.00	11,986.91	0.00	7,213.09	62.43
60-506-414	COMMUNITY EVENTS	2,750	469.75	2,462.73	0.00	287.27	89.55
60-506-415	FATHER DAUGHTER DANCE	0	0.00	0.00	0.00	0.00	0.00
60-506-416	HEALTH AND WELLNESS	2,000	0.00	919.96	0.00	1,080.04	46.00
60-506-417	SENIOR PROGRAMS	12,000	1,703.08	4,950.20	0.00	7,049.80	41.25
60-506-418	MISCELLANEOUS/GEN PROGRAM	1,290	217.98	614.01	41.47	634.52	50.81
60-506-420	DUES & SUBSCRIPTIONS	6,000	393.34	4,246.60	0.00	1,753.40	70.78
60-506-425	TRAVEL & TRAINING	8,000	1,361.63	4,727.23	0.00	3,272.77	59.09
60-506-446	ADVERTISING	10,000	2,372.88	9,389.35	0.00	610.65	93.89
60-506-455	AAC - CONTRACT LABOR	0	0.00	0.00	0.00	0.00	0.00
60-506-456	CONTRACT LABOR-CLEANING	0	0.00	0.00	0.00	0.00	0.00
60-506-457	CONTRACT LABOR-INSTRUCTOR	35,880	2,310.00	32,755.00	0.00	3,125.00	91.29
60-506-458	CONTRACT LABOR-MISC	4,000	0.00	2,602.38	0.00	1,397.62	65.06
60-506-460	REC-BUS SERVICES	0	0.00	0.00	0.00	0.00	0.00
60-506-476	BANK CREDIT CARD CHARGES	6,000	0.00	6,007.91	0.00	(7.91)	100.13
60-506-477	SCHOLARSHIP FUND	0	0.00	0.00	0.00	0.00	0.00
TOTAL SERVICES		202,716	22,728.20	154,817.19	41.47	47,857.34	76.39
MISCELLANEOUS							
60-506-503	SURETY & NOTARY INS	0	0.00	0.00	0.00	0.00	0.00
60-506-505	INSURANCE	7,500	0.00	3,838.98	0.00	3,661.02	51.19
60-506-506	VEHICLE INSURANCE	1,700	0.00	1,700.00	0.00	0.00	100.00
60-506-507	BUILDING INSURANCE	48,000	0.00	43,091.42	0.00	4,908.58	89.77
60-506-508	INSURANCE COMMISSION	0	0.00	0.00	0.00	0.00	0.00
60-506-510	EMPLOYEE APPRECIATION	250	0.00	210.01	0.00	39.99	84.00
60-506-511	TUITION REIMBURSEMENT	4,000	0.00	3,000.00	0.00	1,000.00	75.00
60-506-520	CONTINGENCY	10,000	42,428.59	318,939.29	0.00	(308,939.29)	3,189.39
60-506-525	REC CENTER REFUNDS	3,000	782.00	1,052.00	100.00	1,848.00	38.40
60-506-599	REC-MISCELLANEOUS	0	40.37	40.37	0.00	(40.37)	0.00
TOTAL MISCELLANEOUS		74,450	43,250.96	371,872.07	100.00	(297,522.07)	499.63
CAPITAL EXPENDITURES							
60-506-626	CE-Equipment	0	0.00	0.00	0.00	0.00	0.00
60-506-627	CAPITAL PROJECT	0	0.00	0.00	0.00	0.00	0.00

REVENUE & EXPENSE REPORT (UNAUDITED)

AS OF: SEPTEMBER 30TH, 2021

60 -ANGLETON ACTIVITY CENTER

DEPARTMENT - 06-MAINTENANCE DEPT. % OF YEAR COMPLETED: 100.00

DEPARTMENTAL EXPENDITURES		CURRENT BUDGET	CURRENT PERIOD	YEAR TO DATE ACTUAL	TOTAL ENCUMBERED	BUDGET BALANCE	% YTD BUDGET
OTHER							
60-506-700	TRANSFER TO FUND BALANCE	0	0.00	0.00	0.00	0.00	0.00
60-506-701	TRANS TO GF FOR CARDIO E	0	0.00	0.00	0.00	0.00	0.00
60-506-702	TRANSFER TO CAPT LEASE PA	0	0.00	0.00	0.00	0.00	0.00
60-506-714	TANSFER TO SF CAP REP FUN	0	0.00	0.00	0.00	0.00	0.00
60-506-719	TRANS TO CAP REV LOAN	0	0.00	0.00	0.00	0.00	0.00
60-506-741	TRANS TO UNEMPLOYMENT FUN	0	0.00	0.00	0.00	0.00	0.00
TOTAL OTHER		0	0.00	0.00	0.00	0.00	0.00
TOTAL 06-MAINTENANCE DEPT.		1,209,060	169,762.00	1,381,092.60	9,021.22	(181,053.82)	114.97
TOTAL EXPENDITURES		1,209,060	169,762.00	1,381,092.60	9,021.22	(181,053.82)	114.97
REVENUE OVER/(UNDER) EXPENDITURES		0	25,114.00	(70,820.98)	(9,021.22)	79,842.20	0.00

ABLC DEBT SERVICE PAYMENTS BY SERIES
ANNUAL BUDGET - FISCAL YEAR 2020/2021

Fiscal	2016 Refunding Tax & Rev. Cert		2018 Debt		2013 Refunding		2020 Comb tax		Annual Total			
Year	Principal	Interest	Principal	Interest	Principal	Interest	Principal	Interest	Principal	Interest	Admin Exp.	Total
FY 20/21	$ 110,000	$ 19,950	$ 45,000	$ 25,173	$ 228,773	$ 9,953	$ 130,000	$ 54,005	$ 513,773	$ 109,080	$ 2,625	$ 625,478
FY 21/22	$ 65,000	$ 18,200	$ 45,000	$ 23,598	$ 179,597	$ 5,949	$ 150,000	$ 67,100	$ 439,597	$ 114,847	$ 2,625	**$ 557,069**
FY 22/23	$ 70,000	$ 16,500	$ 50,000	$ 21,698	$ 160,355	$ 2,806	$ 150,000	$ 62,600	$ 430,355	$ 103,604	$ 2,625	$ 536,583
FY 23/24	$ 135,000	$ 13,425	$ 50,000	$ 19,698			$ 150,000	$ 58,100	$ 335,000	$ 91,223	$ 2,625	$ 428,848
FY 24/25	$ 145,000	$ 8,500	$ 50,000	$ 17,948			$ 150,000	$ 53,600	$ 345,000	$ 80,048	$ 2,625	$ 427,673
FY 25/26	$ 140,000	$ 2,800	$ 50,000	$ 16,448			$ 150,000	$ 49,100	$ 340,000	$ 68,348	$ 2,625	$ 410,973
FY 26/27			$ 50,000	$ 14,948			$ 150,000	$ 44,600	$ 200,000	$ 59,548	$ 2,625	$ 262,173
FY 27/28			$ 45,000	$ 13,523			$ 150,000	$ 40,100	$ 195,000	$ 53,623	$ 2,625	$ 251,248
FY 28/29			$ 45,000	$ 12,173			$ 150,000	$ 35,600	$ 195,000	$ 47,773	$ 2,625	$ 245,398
FY 29/30			$ 45,000	$ 10,823			$ 145,000	$ 31,175	$ 190,000	$ 41,998	$ 2,625	$ 234,623
FY 30/31			$ 45,000	$ 9,473			$ 145,000	$ 27,550	$ 190,000	$ 37,023	$ 2,625	$ 229,648
FY 31/32			$ 45,000	$ 8,123			$ 145,000	$ 24,650	$ 190,000	$ 32,773	$ 2,625	$ 225,398
FY 32/33			$ 45,000	$ 6,716			$ 145,000	$ 21,750	$ 190,000	$ 28,466	$ 2,625	$ 221,091
FY 33/34			$ 45,000	$ 5,254			$ 145,000	$ 18,850	$ 190,000	$ 24,104	$ 2,625	$ 216,729
FY34/35			$ 45,000	$ 3,791			$ 145,000	$ 15,950	$ 190,000	$ 19,741	$ 2,625	$ 212,366
FY [illegible]/36			$ 45,000	$ 2,295			$ 145,000	$ 13,050	$ 190,000	$ 15,345	$ 2,625	$ 207,970
FY 36/37			$ 45,000	$ 765			$ 145,000	$ 10,150	$ 190,000	$ 10,915	$ 2,625	$ 203,540
FY 37/38							$ 145,000	$ 7,250	$ 145,000	$ 7,250	$ 750	$ 153,000
FY 38/39							$ 145,000	$ 4,350	$ 145,000	$ 4,350	$ 750	$ 150,100
FY 39/40							$ 145,000	$ 1,450	$ 145,000	$ 1,450	$ 750	$ 147,200
									$ -	$ -		$ -
									$ -	$ -		$ -
									$ -	$ -		$ -
TOTAL	$ 665,000	$ 79,375	$ 790,000	$ 212,441	$ 568,725	$ 18,708	$ 2,925,000	$ 640,980	$ 4,948,725	$ 951,504	$ 46,875	$ 5,947,104

Original 2-16	ABLC	Original 2-18	ABLC	Original	ABLC	Original 11-20	ABLC
Total 4,555,000	1,615,000	Total 9,640,000	900,000	Total 5,265,000	2,251,381	Total 2,925,000	2,925,000
Refund Series 2005,2007,2008		HVAC System, Lake Side Park Match		Refunding of 2001,2002,2003		Funding Lake Side Park	
Construction of Freedom Park (2007)			400,000 500,000	Construction of Rec Center(2003)			

AGENDA ITEM SUMMARY FORM

MEETING DATE: 10/18/2021

PREPARED BY: Megan Mainer, Director of Parks & Recreation

AGENDA CONTENT: Discussion and possible action on projects for future Angleton Better Living Corporation bond capacity.

AGENDA ITEM SECTION: Regular Agenda

BUDGETED AMOUNT: $0.00 **FUNDS REQUESTED:** $2.8M - $3M

FUND: ABLC Capital Account

EXECUTIVE SUMMARY:

ABLC requested staff provide a future bond capacity to address upcoming CIP projects. If ABLC issued debt in March 2022, future bond capacity could be approximately $2.8M to $3M.

RECOMMENDATION:

Staff recommends ABLC approve debt issuance of up to $3M in March 2022, review prioritized CIP park, recreation, and drainage projects, and make a recommendation on projects to pursue.

DEPARTMENT	PROJECT NAME	FY 20-21	FY 21-22	FY 22-23	FY 23-24	FY 24-25	FY 25-26	FY 22-26 PROJECT TOTAL:
POLICE	APD DISPATCH CONSOLE UPGRADE PROJECT	$ 70,000						$ -
FIRE	6 AIR PACK REPLACEMENTS	$ 38,000						$ -
PARKS	FREEDOM PARK BLEACHER SHADES	$ 59,392						$ -
PARKS	ADA TRANSITION PLAN & CONSTRUCTION	$ 44,440						$ -
PARKS/ABLC	LAKESIDE PARK DESIGN & CONSTRUCTION	$ 3,650,000	$ -					$ -
ABLC	BACKUP GENERATOR CONNECTION FOR REC CENTER	$ 44,587						$ -
I.T.	WWTP FIBER- BATES PARK TO WWTP	$ 142,000						$ -
UTILITY	WASTEWATER TREATMENT PLANT LAB	$ 124,000						$ -
UTILITY	NORTHSIDE WWTP	$ 243,000	$ -					$ -
UTILITY	LIFT STATION REHABILITATION	$ 73,000	$ 600,000	$ -	$ -	$ -		$ 600,000
KAB	GATEWAY MASTER PLAN & IMPLEMENTATION	$ 75,000	$ -	$ 750,000				$ 750,000
PUB WRKS	TRANSITION PLAN & CONSTRUCTION FOR SIDEWALKS	$ 42,960						$ -
PUB WRKS	SOLAR LIGHTS	$ 75,000	$ -	$ 100,000	$ 100,000	$ 100,000	$ 100,000	$ 400,000
PUB WRKS	ANNUAL SIDEWALK PROJECTS	$ 80,000	$ -	$ 100,000	$ 100,000	$ 100,000	$ 100,000	$ 400,000
DVLPMNT SRVCS	CITY HALL HVAC SYSTEM REPLACEMENT	$ 40,000	$ -	$ 60,000	$ 60,000			$ 120,000
								$ -
POLICE	COMMUNICATIONS RADIO PROJECT		$ -	$ 120,000				$ 120,000
DVLPMNT SRVCS	COMPREHENSIVE MASTER PLAN		$ -	$ 165,000	$ 165,000			$ 330,000
DVLPMNT SRVCS	SUBSTANDARD BUILDING DEMO		$ -	$ 116,000	$ 34,500	$ 34,500		$ 185,000
ADMIN/NON-DEPT	NEW SERVICE CENTER (PARKS, PUBLIC WORKS, IT)		$ 6,870,524					$ 6,870,524
ADMIN/NON-DEPT	CITY HALL RENOVATIONS		$ -	$ 200,000				$ 200,000
ADMIN/NON-DEPT	LIVABLE CENTER IMPROVEMENT PROJECTS		$ -	$ 500,000	$ 500,000	$ 500,000	$ 500,000	$ 2,000,000
PARKS/ABLC	MUNICIPAL POOL DESIGN & CONSTRUCTION		$ 2,000,000	$ -	$ -			$ 2,000,000
PARKS/ABLC	VETERANS PARK DESIGN & CONSTRUCTION		$ -	$ 750,000				$ 750,000
PARKS/ABLC	FREEDOM PARK MASTER PLAN	$ 400,000	$ -		$ 3,000,000			$ 3,000,000
I.T.	NETWORK INFRASTRUCTURE (HARDWARE ONLY)		$ -	$ 65,253				$ 65,253
I.T.	SERVER AND STORAGE REPLACEMENT		$ -	$ 80,000				$ 80,000
UTILITY	TEXAN TRAIL STORM SEWER		$ 300,000					$ 300,000
UTILITY	HENDERSON TRANSMISSION MAIN LINE TRANSFER		$ -	$ 1,500,000				$ 1,500,000
UTILITY	FIRE HYDRANT REPLACEMENTS		$ -	$ 25,000	$ 25,000	$ 25,000	$ 25,000	$ 100,000
UTILITY	WATER LINE PROJECT		$ -	$ 50,000	$ 50,000	$ 50,000	$ 50,000	$ 200,000
UTILITY	SEWER LINE PROJECT		$ -	$ 50,000	$ 50,000	$ 50,000	$ 50,000	$ 200,000
UTILITY	EXCAVATOR		$ -	$ 50,000	$ -	$ -	$ -	$ 50,000
UTILITY	WATER TREATMENT MEMBRANE		$ -	$ -	$ 150,000		$ 150,000	$ 300,000
KAB	LOOP 274 MEDIAN LANDSCAPE		$ -	$ 230,000				$ 230,000
EMERGENCY MNGMT	NEW EMERGENCY SUPPLIES FACILITY			$ 2,759,313				$ 2,759,313
POLICE	DISPATCH 3RD CONSOLE PROJECT			$ 95,000				$ 95,000
POLICE	TEN HAND-HELD TICKET WRITERS			$ 65,187				$ 65,187
POLICE	APD 4 PATROL CAR REPLACEMENT			$ 200,462				$ 200,462
FIRE	STATION 1 UPGRADE/EXTENSION			$ 50,000	$ 50,000		$ 1,000,000	$ 1,100,000
FIRE	STATION 1 OVERFLOW ADD ON			$ 160,000				$ 160,000
PARKS/ABLC	DOG PARK DESIGN & CONSTRUCTION			$ 60,000	$ 600,000			$ 660,000
PARKS/ABLC	RUEBEN WELCH PLAN, DESIGN & CONSTRUCTION			$ 25,000	$ 200,000	$ 2,000,000		$ 2,225,000
UTILITY	SANITARY SEWER (HERITAGE OAKS)			$ 300,000	$ 300,000	$ 300,000		$ 900,00

DEPARTMENT	PROJECT NAME	FY 20-21	FY 21-22	FY 22-23	FY 23-24	FY 24-25	FY 25-26	FY 22-26 PROJECT TOTAL:
UTILITY	CHENANGO WATER PLANT #2		$ 1,500,000	$ -				$ 1,500,000
UTILITY	OYSTER CREEK WWTP IMPROVEMENTS			$ 1,000,000	$ 11,000,000			$ 12,000,000
UTILITY	RIDGECREST (BOND)			$ 1,500,000				$ 1,500,000
POLICE	APD 4 PATROL CAR REPLACEMENT				$ 202,467			$ 202,467
POLICE	RECORDS MANAGEMENT PROJECT				$ 500,000			$ 500,000
FIRE	ENGINE 2 REPLACEMENT				$ 110,000	$ 75,000	$ 75,000	$ 260,000
PARKS/ABLC	DICKEY & BATES PARK MASTER P,D, & CONSTRUCTION				$ 70,000	$ 300,000	$ 3,000,000	$ 3,370,000
PARKS/ABLC	TRAILS MASTER PLAN, DESIGN & CONSTRUCTION				$ 50,000	$ 200,000	$ 2,000,000	$ 2,250,000
PARKS/ABLC	MASTERSON DESIGN & CONSTRUCTION				$ 50,000	$ 1,000,000		$ 1,050,000
UTILITY	NEW WATER TOWER				$ 3,500,000			$ 3,500,000
UTILITY	SAN FELIPE (BOND)				$ 1,500,000			$ 1,500,000
UTILITY	CITY WIDE PIPE UPGRADES				$ 57,810,480			$ 57,810,480
POLICE	APD 4 PATROL CAR REPLACEMENT					$ 204,492		$ 204,492
PARKS/ABLC	BG PECK DESIGN & CONSTRUCTION					$ 50,000	$ 1,000,000	$ 1,050,000
PARKS/ABLC	BRUSHY BAYOU DESIGN & CONSTRUCTION					$ 100,000	$ 1,000,000	$ 1,100,000
POLICE	APD 4 PATROL CAR REPLACEMENT						$ 206,537	$ 206,537
POLICE	APD/MUNICAL COURT BUILDING CONSTRUCTION						$ 5,000,000	$ 5,000,000
FIRE	REPLACE BRUSH 3						$ 210,000	$ 210,000
FIRE	FIRE DEPT RESCUE TRUCK REPLACEMENT						$ 760,000	$ 760,000
PARKS/ABLC	REC CENTER EXPANSION CONCEPT, DESIGN, & CONSTRUCTION							
PARKS/ABLC	SKATE PARK DESIGN & CONSTRUCTION							
	TOTAL	$ 5,201,379	$ 11,270,524	$ 11,126,215	$ 80,177,447	$ 5,088,992	$ 15,226,537	$ 122,889,715
		$ -	$ -	$ -	$ -	$ -	$ -	
UTILITY	TOTALS	$ 440,000	$ 2,400,000	$ 2,925,000	$ 74,385,480	$ 425,000	$ 275,000	$ 80,410,480
GENERAL	TOTALS	$ 1,316,792	$ 6,870,524	$ 6,386,215	$ 1,991,967	$ 2,663,992	$ 14,951,537	$ 32,864,235
KAB	TOTALS	$ 75,000	$ -	$ 980,000				$ 980,000
ABLC	TOTALS	$ 3,369,587	$ 2,000,000	$ 835,000	$ 3,800,000	$ 2,000,000	$ -	$ 8,635,000

AGENDA ITEM SUMMARY FORM

MEETING DATE: 10/1/2021

PREPARED BY: Kyle Livesay, Assistant Director of Parks & Recreation

AGENDA CONTENT: Discussion on Park and Recreation Administrative updates.

AGENDA ITEM SECTION: Regular Agenda

BUDGETED AMOUNT: N/A **FUNDS REQUESTED:** N/A

FUND: N/A

EXECUTIVE SUMMARY:

TPWD CO-OP Grant – Staff is working to complete the Texas Parks and Wildlife Department's Community Outdoor Outreach Programs grant application. This application is being completed to acquire funding to procure program supplies for paddling, angling, camping, and other outdoor education program to provide to the Angleton community. Staff is seeking council approval of a resolution to pursue the grant on Tuesday, October 12. The grant application is for $47,309.13 and planned submission will be prior to the November 1, 2021 deadline.

KAB Fall Sweep Event – Staff is working to coordinate Keep Angleton Beautiful' s 2021 Fall Sweep Event. The event is scheduled to take place at the Angleton Jr. High parking lot on Saturday, November 13 from 8 am – 12 pm. The event will allow for large household waste disposal, paper shredding, electronic recycling, and include a tree giveaway. To date, all vendors have been confirmed and a communication plan to promote the event has been activated. The total sponsorship dollars for the event are $3,500. Confirmed sponsors include HDR Engineering and Union Pacific. Partners for the event include Angleton ISD, Waste Connections, and Trees for Houston.

Special Event Permitting – Parks & Recreation staff are working in conjunction with other city departments to develop ordinance drafts, standard operating procedures, and a public application process for obtaining a Special Event Permit within the City of Angleton. This project is being conducted to address a need for more comprehensive vetting of applications for local special events. In addition, specific special event permitting ordinance and application procedures will allow for improved enforcement of proper execution of special events within the city.

RECOMMENDATION:

N/A

THE HEART OF BRAZORIA COUNTY ANGLETON

AGENDA ITEM SUMMARY FORM

MEETING DATE: 10/18/2021

PREPARED BY: Geri Gonzales, Recreation Superintendent

AGENDA CONTENT: Discussion on Recreation Division updates.

AGENDA ITEM SECTION: Regular Agenda

BUDGETED AMOUNT: N/A **FUNDS REQUESTED:** N/A

FUND: N/A

EXECUTIVE SUMMARY:

Pool Slide – Lorraine Construction finished the project in early August and TML was able to complete inspection by mid-August. TML submitted paperwork for certificate approval and staff received documentation early September. Staff purchased certification sticker which was received and installed on 10/5/2021.

Pool Doors – NABCO completed the emergency exit doors in late August. NABCO also replaced the pool entrance slider door in late August. Staff is currently working with the vendor regarding aesthetics of door placement and possible alternatives.

Recreation Center Renovations: With CARES and ABLC funding, staff are working with Award Homes on renovating the aquatic area lifeguard, Aquatics Manager office, as well as the Multipurpose Room 1 kitchen. The manager and lifeguard offices were completed in late September. Staff are currently waiting on cabinets to arrive for renovations in the kitchen to begin.

Recreation Center Plaza – With ABLC funding, staff have been working to renovate the courtyard plaza. Renovations are set to include strand lighting, picnic tables and umbrellas, and concrete games, including cornhole and ping pong. Staff also plans to remove the concrete wall around the plaza as a parks winter project.

Hurricane Nicholas – On 9/13, staff prepared the Recreation Center for potential storm impacts by bringing outdoor items in, assessing existing conditions inside and out, and closing early. The storm was upgraded to a hurricane and hit the Angleton area. On 9/14, staff assessed all parks and recreation facilities. The Recreation Center had no power and suffered from water damage in various areas including hallways, women's locker room, gymnasium and both multipurpose rooms. Staff worked to clean all areas and sought the services of Blackmon Mooring to eliminate moisture and prevent future issues. Additionally, once power was restored, the cooling center opened on 9/15 through 9/ 19 from 9AM – 6PM. The facility served as a cooling comfort center that offered air conditioning, showers, charging stations, snacks, and water. The Angleton Recreation Center

had about 65 citizens who utilized these resources. Staff also delivered water and snack boxes to 10 senior citizens at Magnolia Acres who sought help due to no power. The Recreation Center returned to normal operations on Monday, 9/20. Staff are working with the Human Resources Director on insurance claims.

Heart of Christmas – Staff has initiated the planning process for the Heart of Christmas event scheduled to be held on Saturday, 12/4. Staff is working to relocate event attractions due to recent County construction at the former First Baptist Church. Consideration is being made to utilize the county parking lot for rides and the BBQ cookoff.

Events & Programs – 1st quarter events and programs begin this October. This month will bring back the Fall Campout and Movie in the Park at Freedom Park on 10/30. A Kids Pumpkin Break will take place the week of Angleton ISD's fall break on 10/20 – 10/22. This will be a three half-day camp with fall themed activities and swimming. Other activities include a Halloween themed POUND workout, Stars & STEM winter camp, and Mini Athletes. Senior activities will increase this October, including lunches, crafts, movies, and physical activities. The inaugural Miss Silver Heart Pageant will take place on 11/13.

RECOMMENDATION:

N/A

AGENDA ITEM SUMMARY FORM

MEETING DATE: 10/18/2021

PREPARED BY: Stewart Crouch, Parks Superintendent

AGENDA CONTENT: Discussion on Parks Division updates.

AGENDA ITEM SECTION: Parks

BUDGETED AMOUNT: N/A **FUNDS REQUESTED:** N/A

FUND: N/A

EXECUTIVE SUMMARY:

Nicholas Storm Damage Report: Staff cut 6 downed trees in Bates & Dickey Park and delivered countless trailer loads of tree limbs and brush to Welch Park.

We allowed citizens to go through out the park and take any wood that was cut for their personal use.

Additional Information

Dickey Park – New playground is being installed.

Bates Park – Staff is working with Kraftsman for Bates Pavilion install as well as light removal and new basketball goal installation. Demolition preparation has begun.

New disc golf tee signs are in production, hopefully we can have them install before end of year.

BG Peck – We have secured a contractor to address the pavilion concrete. The first contractor fell through and so we went with our second choice. This application will be the same surface as a tennis court.

Staff completed instillation of wheel stops on front row and handicap spaces.

BG Peck playground is up for replacement this year and will be ordered in October. Anticipated install date is early 2022.

Freedom Park – Staff repaired 8 parking lot lights. Staff replaced 14 playground boarders.

Contacted solar lighting contractor to complete Freedom Trail Lighting project.

Staff is working with Costello Engineering and Concourse development regarding a tree survey and mitigation. Excavation likely won't begin until mid-January.

Welch Park – Park is being used as storage for Nicholas debris and will be mulched on site. Mulch will be used for dune restoration by the county.

Lakeside Park Updates – Construction contracts have been executed and DL Meacham plans to begin construction on October 11. Staff is working with elected officials for a groundbreaking ceremony where boards, City Council, elected officials, TPWD, DL Meacham, and Clark Condon will be invited to attend. Staff will inform The Facts and the local Chamber of Commerce once a date and time is set. Project timeline is enclosed.

Miscellaneous: has order new picnic tables and benches, they are scheduled to be shipped mid-December**.**

RECOMMENDATION: NA

THE HEART OF BRAZORIA COUNTY ANGLETON

AGENDA ITEM SUMMARY FORM

MEETING DATE: 10/18/2021

PREPARED BY: Megan Mainer, Director of Parks & Recreation

AGENDA CONTENT: Discussion and possible action on the proposed preliminary design services from Burditt Consultant LLC for Freedom Park and authorize the City Manager to execute an agreement after legal review.

AGENDA ITEM SECTION: Regular Agenda

BUDGETED AMOUNT: $400,000 **FUNDS REQUESTED:** $320,512.50

FUND: 40-506-625

EXECUTIVE SUMMARY:

After City Council approved the final Freedom Park Master Plan on July 27, 2021, staff requested a proposal from Burditt Consultants LLC for design development services. Due to budget deadlines, staff estimated design costs to be approximately $400,000 and submitted this number for the FY2021-2022 budget. A proposal for preliminary design services was provided on August 23, 2021 and is enclosed.

RECOMMENDATION:

Staff recommends ABLC approve the proposed preliminary design services for Freedom Park from Burditt Consultants LLC and authorize the City Manager to execute and agreement after legal review.

SUGGESTED MOTION:

I move we approve the proposed preliminary design services from Burditt Consultants LLC for Freedom Park and authorize the City Manager to execute and agreement after legal review.

BURDITT
Land | Place
LAND | PLACE STUDIO
PLANNING + LANDSCAPE ARCHITECTURE + ARCHITECTURE

August 23, 2021

Megan Mainer
Parks & Recreation Director
City of Angleton
1601 N. Valderas Street
Angleton, TX 77515

Re: Freedom Park Expansion Project; Proposed Basic Services Scope of Work and Fee Proposal for Design

Dear Ms. Mainer,

Let me begin by thanking you and other members of the City's staff, City Council, ABLC, and Parks Board for the opportunity to work together in preparing the 2021 Freedom Park Master Plan. It was a rewarding assignment for all of us and we greatly appreciate the responsive input and focus City's representatives provided. Good decisions were made by the collaborating stakeholders resulting in an excellent master plan for Freedom Park expansion.

We are excited about the next phase of the project wherein you have requested a proposal for our team to provide schematic design through construction documents and construction administration services. Once again, we now stand ready to deliver on the City's behalf.

Attached is our proposed Scope of Basic Services and Fee Proposal for your review. We have structured this proposal in direct response to the Final Master Plan and the established the initial budget based upon the most recently approved Opinion of Probable Cost (OPC) of $6,475,000 wherein an additional baseball field has been added and the amphitheater has been deleted. Our team is prepared to proceed expeditiously upon execution of this proposal for services or a mutually approved Professional Services Agreement. In the case of a PSA being the City's preference, we would be pleased to prepare a draft for you and legal to review or to utilize the City's standard agreement format.

Please advise of any revisions you see that improve upon the Scope of Work, Fee structure, or agreement document style and wording. On behalf of all of us at Burditt, thank you again for the opportunity to collaborate with you on this important project for the community.

Very Sincerely,

Charles Burditt

Charles Burditt

CB/ek
cc: Claudia Walker, RLA, Director of Landscape Architecture Project Manager
J. Shane Howard, Sr. Vice President

Attachments: Exhibit "A" Basic Services - Scope of Work
Exhibit "B" Burditt Consultants - Hourly Rate Sheet 2021
Exhibit "C" Terms and Conditions

Statement of Jurisdiction:

The Texas Board of Architectural Examiners has jurisdiction over complaints regarding a registrant's professional practices. The Board may be contacted at:

TEXAS BOARD OF ARCHITECTURAL EXAMINERS
P. O. BOX 12337
AUSTIN, TEXAS 78711-2337

Approval and Notice to Proceed:

_____**Date**_____

By:

CITY OF ANGLETON

"EXHIBIT A"

Basic Services Scope of Work

PROJECT UNDERSTANDING

The Freedom Park Expansion Project presents a unique opportunity for the City to expand on the current Freedom Park amenities, provide for additional storm water capacity necessary to adhere to a private developer agreement, and to expand the park by utilizing the previously undeveloped 40 +/- acre parcel located immediately north of the current park. The project program provides for attention given to the undeveloped land, expansion of baseball and/or softball activities, multi-use pavilion, connected walking trails, family and child play areas, additional parking, restrooms, storage building and shade, all determined during the recently completed Freedom Park Master Plan. During the master planning project, overall budgets, design intentions, and a hierarchy of options were documented to guide City Staff and Elected leaders through future funding, design, and construction efforts of the park expansion.

Services provided will proceed according to the tasks outlined below and as identified in a Burditt work plan to be developed upon commencement of the project.

The Consultant will take City approved program intentions from the new Master Plan to develop design and construction documentation for construction of park amenities consistent with the City's goals and financial constraints.

Based upon the selected options in the Final Master Plan document and additional discussions with City staff, the Project Construction Budget (including allowances and contingencies) is initial agreed to be Six Million Four Hundred Seventy-Five Thousand Dollars ($ 6,475,000.00 USD) and may be adjusted as required and authorized by the City as the project is finalized.

The overall Project requirements and associated services are a detailed and iterative process; therefore, the following is not intended to be exhaustive. Rather, it serves to establish a basis of agreement on certain project parameters and an understanding of significant elements to be included in the Project Scope of Work. Following are certain facts, understanding of City expectations, and initial *Project Requirements* as we understand them:

- Parking, sidewalks, and trail(s)
- Outdoor nature play and learning areas (covered and/or uncovered)
- Picnic Shelters
- Bus Drop off
- Stormwater Detention System
- New fencing and screening as required
- Landscaping, hardscape, and irrigation
- Site Lighting and Utilities
- Detention facility enhancement and reforestation.
- Nature and walking trail expansion
- Additional shade through structures and tree canopy
- Multi-use pavilion for rentable space, stage, and movie in the park opportunities
- Multi-purpose open lawn / gathering space
- Pavilion / restroom facility
- Improved/enlarged family play with accessible play, splashpad and picnic areas.
- Volleyball and washer stations.
- 2 – 200' baseball fields
- 1 – 325' baseball field with seating and parking expansion

SCOPE OF BASIC SERVICES

I. **PRELIMINARY DESIGN PHASE:**
Revisit Master Plan Study, Schematic Design, and Design Development of facilities, site structures, landscape, hardscape, and development of revised Opinion of Probable Cost (OPC). Meetings as listed are intended to be *virtual*.

A. SCHEMATIC DESIGN

1. Conduct initial Project Kickoff Meeting with City and Design Team. During this meeting, a recommended Project Schedule will be presented for consideration. Tasks will be addressed, and project goals and objectives reaffirmed.

2. During initial meetings with City, the Design Team will confirm previous design intentions and preliminary program needs, improvements, limits of work, and team member roles.

3. Review and affirm recommendations with City from the Freedom Park Master Plan and latest City-approved target budget (Opinion of Probable Cost - OPC) from which to initiate the project. Conduct new discussion of design intentions and City's desired program.

4. Review the preliminary site assessment of the subject property, including, confirming preliminary site attributes, such as topography, floodplain data, accessibility, Traffic Impact Analysis (TIA provided by City or as a Supplemental Service), drainage features, existing landscape features/vegetation, tree canopy requirements, and suitability for intended use.

5. Initiate a preliminary review of relevant and current regulatory Zoning Ordinances and Code requirements adopted by Authorities Having Jurisdiction (AHJ).

6. Review previous conceptual plans and program to further develop Schematic Design plans and renderings.

7. Receive feedback on goals and vision from City staff and City recommended stakeholders, if any.

8. Develop schematic views of the proposed park expansion and new development.

9. Develop schematic designs of desired site improvements, including landscaping, architecture, hardscape, parking (and overflow), and any selected amenities such as trails, playgrounds, etc.

10. Confirm sustainable development opportunities and associated natural systems to be considered as part of the Schematic Design.

11. Develop rendered illustrations of proposed park amenities and improvements.

12. Update OPC in association with more fully developed Schematic Design of facilities, site structures, landscapes, and other drainage improvements.

13. Meet with City staff for review and comment of Schematic Designs, rendered illustrations, and updated OPC.

14. Upon staff's direction, present selected rendered illustrations of Schematic Designs to City's elected officials, Parks Board, ABLC, City boards or committees, and selected stakeholders.

15. Revise Schematic designs as directed by staff.

16. Upon request, prepare and present revised Schematic Designs to additional City-selected audience(s).

17. Upon approval of Schematic Design and OPC by City, proceed with Final Design Phase.

B. DESIGN DEVELOPMENT – PHASE I

1. Proceed with Design Development services (Architecture, Civil Engineering, Structural Engineering, MEP Engineering, Landscape Architecture, and Irrigation) to further develop staff- approved Final Schematic Design to prepare Design Development Drawings.

2. Prepare Preliminary Civil Engineering, Structural Engineering, MEP Engineering, Architecture, Landscape Architecture Drawings and Irrigation Design Development Drawings.

3. Facilitate a pre-development meeting with the City of Angleton to confirm relevant development, zoning and code requirements, including fire lane access requirements, tree planting or preservation requirements, driveway access, etc.

4. Prepare Draft/Outline Specifications which include the following: lighting/plumbing fixtures, door hardware, exterior/interior finishes, equipment, and furnishings for review and approval by City staff.

5. Meet with key City staff to review Design Development drawings and Outline Specifications at regular intervals.

6. Revise drawings, details, Outline Specifications, and updated OPC as applicable.

7. Present Final Design Development Drawings, Outline Specifications, and updated OPC.

8. Upon approval of Design Development Phase and OPC by City, proceed with Construction Document Phase.

II. FINAL DESIGN PHASE:

Final Design is comprised of *Construction Documents* (i.e. drawings, equipment schedules, specifications), and Permit Review

A. CONSTRUCTION DOCUMENTS

1. Revise and update Design Development drawings from Landscape Architect, Architect, Civil/MEP/Structural Engineers, Licensed Irrigation Designer, as required to prepare Construction Documents.

2. Review bidding requirements (front end documents) with staff/team.

3. Conduct initial assessment and preliminary accessibility review discussions with Burditt's Architect and Registered Accessibility Specialist (RAS).

4. Review Construction Documents with the City at specific progress review milestones (30%, 60%, 90%, and 100%) as approved by appropriate City staff members with professional oversight.

5. Update OPC at each progress review.

6. Produce Final Sealed Architecture Plans, Details and Specifications.

7. Produce Final Sealed Engineering (Civil, Structural, MEP) Plans, Details and Specifications.

8. Produce Final Sealed Landscape Architecture Plans, Details and Specifications.

9. Produce Final Sealed Irrigation Plans, Details and Specifications.

10. Submit for TDLR (TAS 2012) Review to Registered Accessibility Specialist (RAS). Registration Fee shall be reimbursed to Burditt by the City as the registrant.

11. Submit construction documents to Authorities Having Jurisdiction (AHJ) for Permit Review and address any review comments.

III. BIDDING AND CONSTRUCTION PHASE SERVICES:

Project Manual (i.e., bidding requirements), Bidding/Contract Award Management Support, and Construction Contract Administration services.

1. Prepare Project Manual (bidding requirements and specifications) and assist staff with Bidding, Requests for Information (RFI), and Addendums as needed.

2. Prepare electronic copies of the bid package (sealed drawings and project manual) for distribution to potential bidders.

3. Participate with City staff in pre-bid meeting to review project scope, instructions to bidders, bidding dates, and probable construction timelines/deadlines.

4. Respond to Requests for Information (RFI), questions from bidding contractors in the form of Addenda.

5. Assist with bid evaluation and provide contract award recommendations to staff.

6. Coordinate (or in coordination with City) and Attend the Project Pre-Construction Conference.

7. Attend scheduled construction progress meetings at regular intervals.

8. Provide Construction Observation reviews appropriate to the stage of construction to:

   a) Become generally familiar and remain so with, and keep City staff generally informed about, the progress and quality of the portion of the construction completed.

   b) Make reasonable efforts to identify and document defects and deficiencies in the construction.

   c) Determine generally whether the construction is being performed in a manner indicating that the project, when fully completed, will be in accordance with the plans and specifications.

   d) Notify the City in writing of any observed substantial deviation from plans and specifications that may prevent facility from being occupied or utilized for its intended use.

9. Issue Observation Reports to Contractor and City staff following site visits.

10. Review Change Orders and provide recommendations to address changed or unforeseeable conditions that may arise during construction.

11. Issue Architect's Supplemental Instructions (ASI) to modify the contract documents as required due to unforeseen conditions or demonstrably insufficient information to complete the Work.

12. Perform up to two (2) General Contractor Submittal Reviews for conformance of information provided with the design intent of the Contract Documents, including shop drawings, product submittals, test results, and other submittals from vendors and contractors. Review of submittals shall not be for the purpose of

determining the accuracy and completeness of other information such as dimensions, quantities, and installation or performance of equipment or systems, which are the Contractor's responsibility.

13. Perform Substantial Completion review of the project to prepare punch list items for completion.

14. Submit Substantial Completion Report to Contractor and City staff.

15. Review and certify construction progress Pay Applications as submitted by Contractor.

16. Communicate and direct contractor to prepare and deliver "As- Built" drawings, specifications, and other Close-out documents per General Requirements.

17. Review Contractor provided "As-Built" Record drawings and specifications and Close-out documents. Submit final Close-out documents to City and Contractor.

18. Coordinate Registered Accessibility Specialist (RAS) inspection for obtaining Certificate of Substantial Compliance (TAS 2012).

19. Conduct Final Completion Observation and Closeout; develop and deliver final report to City staff.

20. Walk through the project with Contractor and City staff to review relevant warranty issues within the contract scope to be corrected by the Contractor approximately 11 months after the date of Substantial Completion.

V. BASIC SERVICES:

A. Basic Services includes the following technical and design disciplines and are included in the Basic Services Fee as depicted in the Fee section of this proposal:

1. Landscape Architectural Design
2. Architectural Design
3. Civil Engineering Design
4. Structural Engineering Design
5. MEP Engineering Design

Any services falling outside of those listed above or changes to the Scope of Services will be treated as Additional or Supplemental Services.

B. Additional Services include, but are not limited to, any changes due to revisions in the base data relating to this matter, additional design changes following approval by the City, and any other services requested by the City or previously not contemplated in the services defined under Basic Services. Additional services will be undertaken only with prior written authorization from City.

Substantive changes or increases to the Project Scope and Program beyond those identified in Project Understanding and Scope of Basic Services may be considered Additional Services and require mutually agreed upon fee adjustments.

Additional Services would include, but are not limited to, the following specialties as they are uniquely determined by individual project needs in highly specific circumstances and not contemplated in Basic Services Fees, including, but not limited to, the following:

1. Cost Recovery Analysis
2. Life Cycle Cost Analysis
3. Archaeological Studies or Services

4. Ecological/Environmental or Hazardous Assessment
5. Hazard remediation for Asbestos, Brownfield Sites, site contamination, and other hazardous elements
6. Tree Survey
7. Historic Preservation
8. Fast-Track Design Services
9. Re-design of key elements of project after prior receipt of Owner Approval
10. Commercial Food Service Design
11. Fire Suppression System Design (Performance Specification will be provided if required by Code)
12. Lightning Protection Design
13. Telecommunications/Data Design
14. Audio/Video systems Design
15. Security systems Design
16. Emergency Power Generation Systems/Design
17. Off-site utility infrastructure Engineering/Design
18. Construction Materials Testing
19. Design of off-site utility infrastructure improvements
20. Design of ancillary, offsite drainage impact mitigation
21. As-Built Plans
22. Measured Drawings of Existing Facilities
23. Existing Facilities Survey/3D Scanning
24. Traffic Impact Analysis (TIA)
25. LEED Design or Application/Audit
26. Building Information Models for post construction use
27. Commissioning
28. Fire Hydrant Flow Test for Fire Suppression and/or Plumbing Design
29. USACE 404 Permitting or other Wetland and Endangered Species Mitigation

C. Supplemental Services include certain project requirements necessary for the fulfillment of Basic Services but which are treated separately from Basic Services or will be provided by the City. Such requirements would be determined collaboratively between the City and Burditt. Any of these services which the City determines should be addressed as Supplemental Services by Burditt will be followed by formal proposals from subconsultants to be approved by the City with costs reimbursed to Burditt plus applicable administrative markup fees. For this project, the potential additional project requirements are anticipated to include:

1. Surveying by a licensed surveyor (metes & bounds, easements, utilities, existing improvements, etc.)
2. Geotechnical engineering report
3. Traffic Impact Analysis (TIA)
4. All permits and/or fees as required by Authorities Having Jurisdiction

Final Deliverables include printed copies as requested by City and electronic copies in portable document format (PDF).

FEE PROPOSAL

Based on the proposed Exhibit "A" Scope of Basic Services and general program as currently understood, we propose the following lump sum fees:

I. BASIC SERVICES FEE:

A. Methodology - Basic Services Fees are based upon a total lump sum fee of ELEVEN PERCENT (11%) of the initial City approved budget of **SIX MILLION FOUR HUNDRED SEVENTY-FIVE THOUSAND DOLLARS ($6,475,000).**

Adjustments to the project budget will be made throughout the project based upon the City's most recently approved OPINION OF PROBABLE COST (OPC) as developed and approved at the conclusion of each Phase. Opinion of Probable Costs are required to be approved in writing by City at the end of each Phase. The fee for the next phase will be adjusted commensurate with the agreed upon lump sum fee of Eleven Percent (11%) of the OPC of Cost of Work and proportionally allocated to the individual phase fee increment shown in the fee schedule below.

B. Basic Services Fee Development -
Fixed Fee / Lump Sum amounts are billed according to the percentage of completion of each phase task as depicted in the Fee Schedule below. The following fee schedule is provided based upon the current program requirements.

1. Preliminary Design Services:

   i. Schematic Design (20% of Fee)……$142,450.00

   ii. Design Development (25% of Fee)……$178,062.50

2. Final Design Services:

   i. Construction Documents (35% of Fee)……$249,287.50

3) Bidding and Construction Phase Services (20% of Fee)……$142,450.00

Total Basic Fee Schedule (100% of Fee)……$712,250.00

II. ADDITIONAL SERVICES & SUPPLEMENTAL SERVICES FEES:

Any relevant Additional Services or Supplemental Services will be discussed with City and followed by a scope and cost proposal from the proposed subconsultant. This proposal will be submitted to the City for approval prior to engaging the subconsultant.

Supplemental Services Fees are invoiced to City at actual cost plus an administrative markup fee of 10% to account for tort and performance risk, coordination costs, and administrative costs. These costs will be invoiced to the City upon receipt of subconsultant invoices with copies of subconsultant invoices included for transparency.

III. EXPENSES:

All anticipated expenses are included in the Basic Services Fees. Therefore, no anticipated expenses are included within the fees for the current project scope. Additional sub-consultants or services that may be requested by the City in addition to those currently required for the project shall be provided as an Additional Service and shall be invoiced as described in Item II, Additional Services & Supplemental Services above.

Exhibit "B"

BURDITT CONSULTANTS, LLC 2021 HOURLY RATES

***HOURLY RATES APPLY ONLY TO ADDITIONAL SERVICES OR FOR REQUESTS MADE OUTSIDE OF BASIC* SERVICES**. Professional Services requested and approved by Client shall be provided at the following rates:

CLASSIFICATION	HOURLY RATE
Principal	$200
Program Manager	$180
Project Manager	$165
Project Architect/Landscape Architect	$145
Senior Planner	$145
Wetland Scientist	$145
Senior Urban Forester	$145
Natural Resource Planner	$135
Licensed Irrigator	$135
Geographic Information Systems (GIS) Planner	$130
Planning Associate	$130
Architecture/Landscape Architecture Associate	$110
Natural Resource/Forester Associate	$110
CAD Designer II	$ 90
CAD Designer I	$ 80
Administrative Assistant II	$ 70
Administrative Assistant I	$ 55

Invoices are prepared monthly with payments due 30 days from receipt. Interest at the rate of 1.5 % per month will be charged on all accounts not paid by the 30th day following the billing date. Necessary sub- consultants not currently required by project authorized and approved by Client shall be invoiced at cost plus ten percent (10%).

EXHIBIT "C"

TERMS AND CONDITIONS

ADDITIONAL SERVICES

Additional assignments outside the scope of work will be invoiced at the Burditt established hourly rates. Additional assignments include, but are not limited to, any changes due to revisions in the original scope of work, base data relating to this matter, any additional meetings or services and any such services requested by Client. Additional services will be provided, with prior written authorization from Client, and will be invoiced as additional services.

PAYMENT OF FEES

For the scope of services stated herein, Client agrees to pay Consultant the compensation stated in this agreement. Consultant agrees to submit invoices monthly for services rendered. Invoices shall be forwarded upon completion or, based upon the percentage of completion, or in the event projects is delayed beyond the control of Consultant, invoices will be forwarded based upon the percentage of completion. Invoices are due and payable, in Conroe, Texas, within 30 days of receipt. Any invoice payment due past 30 days will be subject to interest at the rate of the lesser of (i) one and one-half percent (1 1/2%) per month or (ii) the maximum rate allowed by law.

REIMBURSABLE EXPENSES

There will be no expenses for Basic Services. Necessary expenses, such as copies (CAD plots), blue or blackline prints, xerox enlargements, shipping, etc., are already calculated into the Basic Services Fees; Additional sub-consultants beyond those currently required for Basic Service that are requested and authorized by Client shall be paid at cost plus ten percent (10%) after prior approval by City Staff.

FORCE MAJEURE

Circumstances or events may occur that are outside the control of either party. Neither party shall be deemed in default of this Agreement to the extent that any delay or failure in the performance of its obligations results from any cause beyond its reasonable control and without its negligence.

STANDARD OF CARE

The standard of care for all professional services performed or furnished by Consultant under this Agreement will be the skill and care used by members of Consultant's profession practicing under similar circumstances at the same time and in the same locality. Consultant makes no warranties, express or implied, under this Agreement or otherwise, in connection with Consultant's services.

INDEMNIFICATION

Client and Consultant each agree, to the fullest extent permitted by law, to indemnify and hold the other harmless, and their respective officers, employees, agents and representatives, from and against liability for all claims, losses, damages and expenses, including reasonable attorneys' fees, to the extent such claims, losses, damages, or expenses are caused by the indemnifying party's negligent acts, errors or omissions. In the event claims, losses, damages or expenses are caused by the joint or concurrent negligence of Client and Consultant, they shall be borne by each party in proportion to its negligence.

RISK ALLOCATION

Burditt Consultants, LLC agrees to carry out and perform the services herein agreed to in a professional and competent manner. In recognition of the relative risks, rewards, and benefits of the project both to the Client and Burditt, the risks have been allocated so that the Client agrees that, to the fullest extent permitted by law, Burditt's total liability to the Client, for any and all claims, losses, expenses, damages or claim expenses arising out of this agreement, from any cause or causes, shall not exceed the total amount of Burditt's fee or other amount agreed upon when added under Special Conditions. Such causes include, but are not limited to, Burditt's negligence, errors, omissions, strict liability, breach of contract or breach of warranty.

OWNERSHIP OF DOCUMENTS

All documents prepared or furnished by Consultant pursuant to this Agreement are instruments of Consultant's professional service, and Consultant shall retain an ownership and property interest therein. Consultant grants Client a license to use instruments of Consultant's professional service for the purpose of constructing, occupying and maintaining the Project. Reuse or modification of any such documents by Client, without Consultant's written permission, shall be at Client's sole risk, and Client agrees to indemnify

and hold Consultant harmless from all claims, damages and expenses, including attorneys' fees, arising out of reuse by Client or by others acting through Client.

USE OF ELECTRONIC MEDIA

Copies of documents that may be relied upon by Client are limited to the printed copies (also known as hard copies) that are signed or sealed by Consultant. Files in electronic media format or text, data, graphic or other types that are furnished by Consultant to Client are only for convenience of Client. Any conclusion or information obtained or derived from such electronic files will be at the user's sole risk. When transferring documents in electronic media format, Consultant makes no representations to long-term compatibility, usability, or readability of documents resulting from the use of software application packages, operating systems or computer hardware differing from those in use by Consultant at the beginning of this assignment.

HAZARDOUS ENVIRONMENTAL CONDITIONS

It is acknowledged by both parties that Consultant's scope of services does not include any services related to the presence at the site of asbestos, PCBs, petroleum, hazardous waste or radioactive materials. Client acknowledges that Consulting is performing professional services for Client and Consultant is not and shall not be required to become an "arranger," "operator," "generator" or "transporter" of hazardous substances, as defined in the Comprehensive Environmental Response, Compensation, and Liability Act of 1990 (CERCLA).

OPINIONS OF COST

When included in Consultant's scope of service, opinions or estimates of probable construction cost are prepared on the basis of Consultant's experience and qualifications and represent Consultant's judgment as a professional general familiar with the industry. However, since Consultant has no control over the cost of labor, materials, equipment or services furnished by others, over contractor's methods of determining prices, or over competitive bidding or market conditions, Consultant cannot and does not guarantee that proposals, bids, or actual construction cost will not vary from Consultant's opinions or estimates of probable construction cost.

TERMINATION OF CONTRACT

Client may terminate this Agreement with seven days prior written notice to Consultant for convenience or cause. Consultant may terminate this Agreement for cause with seven days prior written notice to Client for cause. Failure of Client to make payments when due shall be cause for suspension of services or, ultimately, termination, unless and until Consultant has been paid in full all amounts due for services, expenses and other related charges.

CONSTRUCTION PHASE SERVICES

If this Agreement provides for any construction phase services by Consultant, it is understood that the Contractor, not Consultant, is responsible for the construction of the project, and that Consultant is not responsible for the acts or omissions of any contractor, subcontractor or material supplier; for safety precautions, programs or enforcement; or for construction means, methods, techniques, sequences and procedures employed by the Contractor.

INSURANCE

Consultant shall maintain in force insurance in the following amounts
$1,000,000 – General Liability
$1,000,000 – Professional Liability
Commercial Automobile and Worker's Compensation in the amount required by state law.

TO BE PROVIDED BY CLIENT

Client shall provide the following information if needed:

1. Legal descriptions of property and available Plat(s)
2. Any available site plans, relevant documents impacting design, drainage maps, existing utilities or easements.

AGENDA ITEM SUMMARY FORM

MEETING DATE: 10/18/2021

PREPARED BY: Megan Mainer, Director of Parks & Recreation

AGENDA CONTENT: Discussion and possible action authorizing the City Manager to execute an agreement after legal review with Kimley-Horn to develop Angleton's Park Design Standards.

AGENDA ITEM SECTION: Regular Agenda

BUDGETED AMOUNT: $80,000 **FUNDS REQUESTED:** NA

FUND: 40-506-625

EXECUTIVE SUMMARY:

On June 14, staff met with the Parks and Recreation board to discuss the development of a park standards manual. This manual will act as a resource for staff, boards and commissions, and developers regarding minimum park standards. Staff has referenced City of Virgina Beach and City of Alexandria Design Standards Manual as templates but would like to solicit assistance from Kimley-Horn who has experience developing similar manuals, templates enclosed.

Also, design development for Freedom Park Master Plan has come under budget.

Additionally, on Monday, October 11, 2021, the Parks & Recreation Board made a motion to recommend that ABLC fund the proposal from Kimley-Horn to develop Angleton's Design Standards Manual.

Kimley-Horn representative, Kristina Malek, is here to speak to ABLC regarding Angleton's Design Standards Manual.

RECOMMENDATION:

Staff recommends additional funds in 40-506-625 be used to contract Kimley-Horn to develop Angleton's Design Standards Manual.

SUGGESTED MOTION:

I move we use funds in 40-506-625 to contract Kimley-Horn to develop Angleton's Design Standards Manual and authorize the City Manager to execute an agreement after legal review.

Kimley»Horn

July 6, 2021

Megan Mainer
Director of Parks & Recreation
City of Angleton
121 S. Velasco
Angleton, TX 77515

Re: Professional Services Agreement
Park Standards

Dear Mrs. Mainer,

Kimley-Horn and Associates, Inc. ("Kimley-Horn" or "Consultant") is pleased to submit this letter agreement (the "Agreement") to The City of Angleton ("Client") for providing Professional Services associated with the above referenced project.

PROJECT UNDERSTANDING

Kimley-Horn understands that the Client seeks professional assistance in the development of Park Standards to guide developers, consultants and staff on future park improvements. Tasks may include coordination and meetings, developing or modifying standards in an effort to prepare a Park Standards document. Our understandings and assumptions which this Agreement is based include:

- The Client has directed Kimley-Horn to utilize the City of Virginia Beach, VA "Design Standards Manual" and the City of Alexandria, VA "Park Facility Standards Manual" as a template for formatting and content on replica and modified park standards.
- We shall be entitled to rely on the completeness and accuracy of all information provided by the Client or the Client's consultants or representatives. The Client shall provide all information requested by Kimley-Horn during the project, including but not limited to the following:
    - List of Parks
    - Lakeside Park Construction Documents
    - Bates Park Construction Documents
    - Dickey Park Construction Documents
    - KAB Plant List
    - Gateway Master Plan
    - Corporate ID Package
    - Applicable details, specifications, and standards to reference
- The Consultant will rely upon the timely response and participation of the Client.

SCOPE OF SERVICES

Kimley-Horn will provide the services specifically set forth below. The approach to developing the Park Standards includes two phases: Evaluation Phase and Development Phase.

Task 1 Evaluation Phase $10,000 Lump Sum

The Consultant will attend a Kickoff Meeting with the City to discuss the City's current standards, confirm new standards to include, review documents to reference in development of modified and replica park standards, and provide the Consultant with the applicable documents to utilize. During this meeting, the Consultant will also confirm which parks to include in the Park Development Standards section.

Based on initial discussions with the Client, it is our understanding the following Park Standards will be included:

- Disc Golf
- Restroom Building
- Parking lots (concrete, asphalt, gravel, pervious)
- Trails (concreted, aggregate, natural)
- Baseball / Softball (field, backstop, dugout cover)
- Soccer (field, goal)
- Basketball (court, goal system)
- Horseshoe Pit
- Tennis Court (court, netting)
- Volleyball (court, netting, sand)
- Football (field, goal)
- General Fields
- Court Surfacing
- Bleachers
- Playground (site considerations, equipment, surfacing: wood fiber or poured in place rubber, drainage)
- Pedestrian Prefabricated Bridge
- Decks/Boardwalks
- Shelters (wood, fabric)
- Lighting (street, parking lot, pathways, areas, athletic fields, ground recessed, historic pole)
- Fencing (chain link, metal, wood)
- Signage (Entry, educational, wayfinding, regulatory)
- Site furnishings (bench, bike rack, grill, picnic table, trash receptacle, pet waste disposal, drinking fountain, pet fountain, flagpole, bollards)
- Park Utilities
- Planting Design
- Irrigation
- Site prep and clean up

The Consultant will review the information provided in the Kickoff Meeting, evaluate the information, and develop a spreadsheet outline for the Park Standards. Outline to include references to modified park standards (based on information provided by the City), new park standards (based on limited to

no information provided by the City), and replica park standards (based on the same standard developed by Virginia Beach and/or Alexandria's Park Standards without any modifications). Upon completion of the outline, Kimley-Horn will meet with staff to confirm the document direction and incorporate any feedback into the Development Phase.

This task includes project management effort for the preparation of progress reports, meeting notes, project workplan, schedule, administration, and coordination with staff.

Meetings: Two (2) in person
Deliverables: Outline of Park Standards spreadsheet

Task 2 Development Phase $75,000 Lump Sum

The Consultant will prepare a Park Standards document in accordance with the Outline of Park Standards from the Evaluation Phase. Anticipated sections include:

- Cover page
- Table of Contents
- Introduction
- Park Development Standards
- User Guide / Park Standard Template
- Park Standards

Park Standards content to include:

- Definition / Purpose – scope and functionality of each component
- General information – as applicable: jurisdictional requirements, special conditions, preferred manufacturer, related sections, design criteria
- Materials / Finish – as applicable: treatment, fabrication requirements, color
- Features – components, options
- Installation – method, specific site requirements
- Life cycle – warranty requirements, site requirements
- Standard detail / Example Photo

The Consultant will develop up to 30 modified park standards (based on information provided by the City), up to 20 new park standards (based on limited to no information provided by the City), and up to 15 replica park standards (based on the same standards developed by Virginia Beach and/or Alexandria's Park Standards). The Consultant shall rely on all information supplied by the Client as accurate and correct. Consultant is not responsible for additional work required due to inaccurate, incorrect, or incomplete information supplied by the Client.

Kimley-Horn will prepare a Draft Park Standards Document to review with the Client up to 3 times at 30%, 60%, and 90% completion. Upon 60% completion, Kimley-Horn will meet with the Parks Board to gather feedback. Feedback to be incorporated into the subsequent deliverable. A Final Park Standards document will be prepared and printed to hardcopy. Additional revisions following the Final Park Standards document will be considered an additional service.

This task includes project management effort for the preparation of progress reports, meeting notes,

project workplan, schedule, administration, and coordination with staff.

Meetings: Four (4) in person
Deliverables: Draft Park Standards pdf, Final Park Standards pdf/hardcopy (up to 3)

SERVICES NOT INCLUDED

Any other services, including but not limited to the following, are not included in this Agreement:

- Additional meetings, stakeholder coordination, or presentations
- Additional standards above the quantities identified herein
- Developing Construction Specifications
- Developing Bidding or Construction Documents
- Cost estimates
- Website creation

ADDITIONAL SERVICES

Any items requested that are not specifically noted in the above scope will be considered additional services and will be provided as requested and authorized by the Client at our then current hourly rates.

SCHEDULE

The Consultant will work to prepare a mutually agreed upon schedule with the City.

FEE AND EXPENSES

Kimley-Horn will perform the services in Tasks 1-2 for the total lump sum labor fee below. Individual task amounts are informational only.

Task 1	Evaluation Phase		$10,000	LS
Task 2	Development Phase		$75,000	LS
		Total	***$85,000***	

Lump sum fees will be invoiced monthly based upon the overall percentage of services performed. Payment will be due within 25 days of your receipt of the invoice and should include the invoice number and Kimley-Horn project number.

CLOSURE

In addition to the matters set forth herein, our Agreement shall include and be subject to, and only to, the attached Standard Provisions, which are incorporated by reference. As used in the Standard Provisions, "Consultant" shall refer to Kimley-Horn and Associates, Inc., and "Client" shall refer to The City of Angleton.

Kimley-Horn, in an effort to expedite invoices and reduce paper waste, submits invoices via email in an Adobe PDF format. We can also provide a paper copy via regular mail if requested. Please include the invoice number and Kimley-Horn project number with all payments. Please provide the following information:

____ Please email all invoices to _____

____ Please copy _____

If you want us to proceed with the services, please have an authorized person sign this Agreement below and return to us. We will commence services only after we have received a fully-executed agreement. Fees and times stated in this Agreement are valid for sixty (60) days after the date of this letter.

To ensure proper set up of your projects so that we can get started, please complete and return with the signed copy of this Agreement the attached Request for Information. Failure to supply this information could result in delay in starting work on your project.

We appreciate the opportunity to provide these services to you. Please contact me if you have any questions.

Very truly yours,

KIMLEY-HORN AND ASSOCIATES, INC.

Kristina Malek, P.L.A.

Associate / Project Manager

Mark Kirkland, P.E.

Vice President

Attachment: Request for Information, Standard Provisions

Agreed to on this _____day of _____, 2021.

City of Angleton

By: _____
Signature

_____
Title

_____
Print Name

_____
Date

Kimley»Horn

Request for Information

Please return this information with your signed contract; failure to provide this information could result in delay in starting your project

Client Identification

Full, Legal Name of Client						
Mailing Address for Invoices						
Contact for Billing Inquiries						
Contact's Phone and e-mail						
Client is (check one)	Owner		Agent for Owner		Unrelated to Owner	

Property Identification

	Parcel 1	Parcel 2	Parcel 3	Parcel 4
Street Address				
County in which Property is Located				
Tax Assessor's Number(s)				

Property Owner Identification

	Owner 1	Owner 2	Owner 3	Owner 4
Owner(s) Name				
Owner(s) Mailing Address				
Owner's Phone No.				
Owner of Which Parcel #?				

Project Funding Identification – List Funding Sources for the Project

Attach additional sheets if there are more than 4 parcels or more than 4 owners

KIMLEY-HORN AND ASSOCIATES, INC.
STANDARD PROVISIONS

(1) **Consultant's Scope of Services and Additional Services.** The Consultant will perform only the services specifically described in this Agreement. If requested by the Client and agreed to by the Consultant, the Consultant will perform Additional Services, which shall be governed by these provisions. Unless otherwise agreed to in writing, the Client shall pay the Consultant
for any Additional Services an amount based upon the Consultant's then-current hourly rates plus an amount to cover certain direct expenses including telecommunications, in-house reproduction, postage, supplies, project related computer time, and local mileage. Other direct expenses will be billed at 1.15 times cost.

(2) **Client's Responsibilities.** In addition to other responsibilities herein or imposed by law, the Client shall:
(a) Designate in writing a person to act as its representative, such person having complete authority to transmit instructions, receive information, and make or interpret the Client's decisions.
(b) Provide all information and criteria as to the Client's requirements, objectives, and expectations for the project and all standards of development, design, or construction.
(c) Provide the Consultant all available studies, plans, or other documents pertaining to the project, such as surveys, engineering data, environmental information, etc., all of which the Consultant may rely upon.
(d) Arrange for access to the site and other property as required for the Consultant to provide its services.
(e) Review all documents or reports presented by the Consultant and communicate decisions pertaining thereto within a reasonable time so as not to delay the Consultant.
(f) Furnish approvals and permits from governmental authorities having jurisdiction over the project and approvals and consents from other parties as may be necessary.
(g) Obtain any independent accounting, legal, insurance, cost estimating and feasibility services required by Client.
(h) Give prompt written notice to the Consultant whenever the Client becomes aware of any development that affects the Consultant's services or any defect or noncompliance in any aspect of the project.

(3) **Period of Services.** Unless otherwise stated herein, the Consultant will begin work after receipt of a properly executed copy of this Agreement. This Agreement assumes conditions permitting continuous and orderly progress through completion of the services. Times for performance shall be extended as necessary for delays or suspensions due to circumstances that the Consultant does not control. If such delay or suspension extends for more than six months, Consultant's compensation shall be renegotiated.

(4) **Method of Payment.** Client shall be pay Consultant as follows:
(a) Invoices will be submitted periodically for services performed and expenses incurred. Payment of each invoice will be due within 25 days of receipt. The Client shall also pay any applicable sales tax. All retainers will be held by the Consultant and applied against the final invoice. Interest will be added to accounts not paid within 25 days at the rate of 12% per year beginning on the 25th day. If the Client fails to make any payment due under this or any other agreement within 30 days after the Consultant's transmittal of its invoice, the Consultant may, after giving notice to the Client, suspend services and withhold deliverables until all amounts due are paid.
(b) If the Client relies on payment or proceeds from a third party to pay Consultant and Client does not pay Consultant's invoice within 60 days of receipt, Consultant may communicate directly with such third party to secure payment.
(c) If the Client objects to an invoice, it must advise the Consultant in writing giving its reasons within 14 days of receipt of the invoice or the Client's objections will be waived, and the invoice shall conclusively be deemed due and owing. If the Client objects to only a portion of the invoice, payment for all other portions remains due within 25 days of receipt.
(d) If the Consultant initiates legal proceedings to collect payment, it may recover, in addition to all amounts due, its reasonable attorneys' fees, reasonable experts' fees, and other expenses related to the proceedings. Such expenses shall include the cost, at the Consultant's normal hourly billing rates, of the time devoted to such proceedings by its employees."
(e) The Client agrees that the payment to the Consultant is not subject to any contingency or condition. The Consultant may negotiate payment of any check tendered by the Client, even if the words "in full satisfaction" or words intended to have similar effect appear on the check without such negotiation being an accord and satisfaction of any disputed debt and without prejudicing any right of the Consultant to collect additional amounts from the Client."

(5) **Use of Documents.** All documents and data prepared by the Consultant are related exclusively to the services described in this Agreement, and may be used only if the Client has satisfied all of its obligations under this Agreement. They are not intended or represented to be suitable for use or reuse by the Client or others on extensions of this project or on any other project. Any modifications by the Client to any of the Consultant's documents, or any reuse of the documents without written authorization by the Consultant will be at the Client's sole risk and without liability to the Consultant, and the Client shall indemnify, defend and hold the Consultant harmless from all claims, damages, losses and expenses, including but not limited to attorneys' fees, resulting therefrom. The Consultant's electronic files and source code remain the property of the Consultant and shall be provided to the Client only if expressly provided for in this Agreement. Any electronic files not containing an electronic seal are provided only for the convenience of the

Client, and use of them is at the Client's sole risk. In the case of any defects in the electronic files or any discrepancies between them and the hardcopy of the documents prepared by the Consultant, the hardcopy shall govern.

(6) **Opinions of Cost.** Because the Consultant does not control the cost of labor, materials, equipment or services furnished by others, methods of determining prices, or competitive bidding or market conditions, any opinions rendered as to costs, including but not limited to the costs of construction and materials, are made solely based on its judgment as a professional familiar with the industry. The Consultant cannot and does not guarantee that proposals, bids or actual costs will not vary from its opinions of cost. If the Client wishes greater assurance as to the amount of any cost, it shall employ an independent cost estimator. Consultant's services required to bring costs within any limitation established by the Client will be paid for as Additional Services.

(7) **Termination.** The obligation to provide further services under this Agreement may be terminated by either party upon seven days' written notice in the event of substantial failure by the other party to perform in accordance with the terms hereof, or upon thirty days' written notice for the convenience of the terminating party. The Consultant shall be paid for all services rendered and expenses incurred to the effective date of termination, and other reasonable expenses incurred by the Consultant as a result of such termination.

(8) **Standard of Care.** The standard of care applicable to Consultant's services will be the degree of care and skill ordinarily exercised by consultants performing the same or similar services in the same locality at the time the services are provided. No warranty, express or implied, is made or intended by the Consultant's performance of services, and it is agreed that the Consultant is not a fiduciary with respect to the Client.

"(9) **LIMITATION OF LIABILITY.** IN RECOGNITION OF THE RELATIVE RISKS AND BENEFITS OF THE PROJECT TO THE CLIENT AND THE CONSULTANT, THE RISKS ARE ALLOCATED SUCH THAT, TO THE FULLEST EXTENT ALLOWED BY LAW, AND NOTWITHSTANDING ANY OTHER PROVISIONS OF THIS AGREEMENT OR THE EXISTENCE OF APPLICABLE INSURANCE COVERAGE, THAT THE TOTAL LIABILITY, IN THE AGGREGATE, OF THE CONSULTANT AND THE CONSULTANT'S OFFICERS, DIRECTORS, EMPLOYEES, AGENTS, AND SUBCONSULTANTS TO THE CLIENT OR TO ANYONE CLAIMING BY, THROUGH OR UNDER THE CLIENT, FOR ANY AND ALL CLAIMS, LOSSES, COSTS OR DAMAGES WHATSOEVER ARISING OUT OF OR IN ANY WAY RELATED TO THE SERVICES UNDER THIS AGREEMENT FROM ANY CAUSES, INCLUDING BUT NOT LIMITED TO, THE NEGLIGENCE, PROFESSIONAL ERRORS OR OMISSIONS, STRICT LIABILITY OR BREACH OF CONTRACT OR ANY WARRANTY, EXPRESS OR IMPLIED, OF THE CONSULTANT OR THE CONSULTANT'S OFFICERS, DIRECTORS, EMPLOYEES, AGENTS, AND SUBCONSULTANTS, SHALL NOT EXCEED TWICE THE TOTAL COMPENSATION RECEIVED BY THE CONSULTANT UNDER THIS AGREEMENT OR $50,000, WHICHEVER IS GREATER. HIGHER LIMITS OF LIABILITY MAY BE NEGOTIATED FOR ADDITIONAL FEE. THIS SECTION 9 IS INTENDED SOLELY TO LIMIT THE REMEDIES AVAILABLE TO THE CLIENT OR THOSE CLAIMING BY OR THROUGH THE CLIENT, AND NOTHING IN THIS SECTION 9 SHALL REQUIRE THE CLIENT TO INDEMNIFY THE CONSULTANT."

(10) **Mutual Waiver of Consequential Damages.** In no event shall either party be liable to the other for any consequential, incidental, punitive, or indirect damages including but not limited to loss of income or loss of profits.
"(11) Construction Costs. Under no circumstances shall the Consultant be liable for extra costs or other consequences due to unknown conditions or related to the failure of contractors to perform work in accordance with the plans and specifications. Consultant shall have no liability whatsoever for any costs arising out of the Client's decision to obtain bids or proceed with construction before the Consultant has issued final, fully-approved plans and specifications. The Client acknowledges that all preliminary plans are subject to substantial revision until plans are fully approved and all permits obtained."

(12) **Certifications.** All requests for the Consultant to execute certificates, lender consents, or other third-party reliance letters must be submitted to the Consultant at least 14 days prior to the requested date of execution. The Consultant shall not be required to execute certificates, consents, or third-party reliance letters that are inaccurate, that relate to facts of which the Consultant does not have actual knowledge, or that would cause the Consultant to violate applicable rules of professional responsibility.

(13) **Dispute Resolution.** All claims by the Client arising out of this Agreement or its breach shall be submitted first to mediation in accordance with the American Arbitration Association as a condition precedent to litigation. Any mediation or civil action by Client must be commenced within two years of the accrual of the cause of action asserted but in no event later than allowed by applicable statutes.

(14) **Hazardous Substances and Conditions.** Consultant shall not be a custodian, transporter, handler, arranger, contractor, or remediator with respect to hazardous substances and conditions. Consultant's services will be limited to analysis, recommendations, and reporting, including, when agreed to, plans and specifications for isolation, removal, or remediation. The Consultant will notify the Client of unanticipated hazardous substances or conditions of which the

Consultant actually becomes aware. The Consultant may stop affected portions of its services until the hazardous substance or condition is eliminated.

(15) **Construction Phase Services.**
(a) If the Consultant prepares construction documents and the Consultant is not retained to make periodic site visits, the Client assumes all responsibility for interpretation of the documents and for construction observation, and the Client waives any claims against the Consultant in any way connected thereto.
(b) The Consultant shall have no responsibility for any contractor's means, methods, techniques, equipment choice and usage, sequence, schedule, safety programs, or safety practices, nor shall Consultant have any authority or responsibility to stop or direct the work of any contractor. The Consultant's visits will be for the purpose of endeavoring to provide the Client a greater degree of confidence that the completed work of its contractors will generally conform to the construction documents prepared by the Consultant. Consultant neither guarantees the performance of contractors, nor assumes responsibility for any contractor's failure to perform its work in accordance with the contract documents.
(c) The Consultant is not responsible for any duties assigned to it in the construction contract that are not expressly provided for in this Agreement. The Client agrees that each contract with any contractor shall state that the contractor shall be solely responsible for job site safety and its means and methods; that the contractor shall indemnify the Client and the Consultant for all claims and liability arising out of job site accidents; and that the Client and the Consultant shall be made additional insureds under the contractor's general liability insurance policy.

(16) **No Third-Party Beneficiaries; Assignment and Subcontracting.** This Agreement gives no rights or benefits to anyone other than the Client and the Consultant, and all duties and responsibilities undertaken pursuant to this Agreement will be for the sole benefit of the Client and the Consultant. The Client shall not assign or transfer any rights under or interest in this Agreement, or any claim arising out of the performance of services by Consultant, without the written consent of the Consultant. The Consultant reserves the right to augment its staff with subconsultants as it deems appropriate due to project logistics, schedules, or market conditions. If the Consultant exercises this right, the Consultant will maintain the agreed-upon billing rates for services identified in the contract, regardless of whether the services are provided by in-house employees, contract employees, or independent subconsultants.

(17) **Confidentiality.** The Client consents to the use and dissemination by the Consultant of photographs of the project and to the use by the Consultant of facts, data and information obtained by the Consultant in the performance of its services. If, however, any facts, data or information are specifically identified in writing by the Client as confidential, the Consultant shall use reasonable care to maintain the confidentiality of that material.

(18) **Miscellaneous Provisions.** This Agreement is to be governed by the law of the State of Texas. This Agreement contains the entire and fully integrated agreement between the parties and supersedes all prior and contemporaneous negotiations, representations, agreements or understandings, whether written or oral. Except as provided in Section 1, this Agreement can be supplemented or amended only by a written document executed by both parties. Any conflicting or additional terms on any purchase order issued by the Client shall be void and are hereby expressly rejected by the Consultant. Any provision in this Agreement that is unenforceable shall be ineffective to the extent of such unenforceability without invalidating the remaining provisions. The non-enforcement of any provision by either party shall not constitute a waiver of that provision nor shall it affect the enforceability of that provision or of the remainder of this Agreement.

CITY OF VIRGINIA BEACH

DESIGN STANDARDS MANUAL

A COMPONENT OF THE VIRGINIA BEACH OUTDOORS PLAN



VIRGINIA BEACH PARKS & RECREATION

PLANNING, DESIGN & DEVELOPMENT

UPDATED JULY 2016



DESIGN STANDARDS MANUAL

City of Virginia Beach
Department of Parks & Recreation

Director Michael Kalvort, CPRE

CONTRIBUTING STAFF

Planning, Design & Development

Chad Morris
Brian K. Phelps
Chris Kennedy
Rob MacPherson

Parks & Natural Areas

Rick Rowe
Susan Topping
Amy Woodson
Sharon Godfrey
Michael T. Moore

Landscape Management

Frank Fentress
Larry Plummer
Mike Barlow

WEST NECK CREEK NATURAL AREA | An example of a municipal preservation area whose primary purpose is to preserve the indigenous vegetation and wildlife in order to serve as green infrastructure, passive recreation and as a scenic environment for Virginia Beach residents to enjoy.

TABLE OF CONTENTS

5 Park Development Standards
19 Specialized Facilities
25 Buildings
29 Parking Lots
35 Planting Designs
39 Fields
47 Play Courts
55 Playground Systems
61 Park Walkways & Trails
71 Shelters
77 Lighting
81 Fencing
89 Signage
97 Site Furnishings



COVER PHOTO | Virginia Beach is home to 265 parks and park facilities, encompassing over 4,000 acres, including neighborhood and community parks, metro parks, signature parks, natural areas, waterway accesses, trail linkages, open space preservation areas and park athletic facilities. Each park is unique and offers something for everyone, from wide open spaces to playgrounds, picnic shelters, and ballfields.

This photo was taken at Gatewood Park in central Virginia Beach which exemplifies various design standards for our park system with regards to walkways, tree plantings, shelters, picnic tables and playground areas.

INTRODUCTION

CITY OF VIRGINIA BEACH

This document was developed with extensive input from various City Parks & Recreation staff. Its goal is to establish a unique identity for the entire Virginia Beach park system, where individual park components relate to each other as well as to the City's park system as a whole. This manual covers a wide range of park elements and systems, identifying specific types, materials, and installation practices.

It is the City's standard that all sites shall be easily accessible to the public by all modes of transportation: vehicular, bicycle, and pedestrian. Standards for ADA accessibility are incorporated throughout this document. ADA accessibility shall be accommodated at all sites to the fullest extent practical.

The preparation of this document meets the following three objectives:

- The development and utilization of a single standards document by all Parks & Recreation Divisions
- The establishment of a pattern of common elements and an identifiable quality throughout all the City's park land
- The utilization of consistent, safe, sustainable and cost effective materials that are easily maintained and managed and are implemented system-wide

Key Components:

The Design Standards Manual identifies standard elements, materials, product information, specifications (as needed), and implementation practices. The main components of the manual are listed below. Each section includes text, images, and details to communicate the City's standards. However, the details provided throughout the manual are not to be used for construction, but for general guidance as to common practices and design elements.

- Park Development Standards
- Specialized Facilities
- Buildings
- Parking Lots
- Planting Design
- Fields
- Play Courts
- Playground Systems
- Park Walkways and Trails
- Shelters
- Lighting
- Fencing
- Signage
- Site Furnishings

SECTION ONE

Park Development Standards







(Above): Aerial view of Mount Trashmore Park, including views of Lake Trashmore, Kids Cove playground, and skate park with adjacent vert ramp.

(Immediately above): ADA accessible ramp to play structure on Kids Cove.

SIGNATURE PARK (SP)

DEFINITION	A municipal outdoor recreational facility that is unique to the Virginia Beach municipal parks and recreation system. These parks shall service a variety of ages and emphasize family and organized group activities. Many times signature parks will have a special use facility or single purpose recreational activity, such as a fairground, outdoor theater, or festival area. These parks are typically designed for a full-day experience and are capable of holding large scale special events with supporting amenities.
SIZE	Greater than 100 acres
STAFFING	Staffed full-time with municipal employees
UTILITIES	Water, electric/power, telephone, sewer
EXISTING SITES	Mount Trashmore Park and Little Island Park
UNIQUE AMENITIES	Substantial waterfront or other distinctive amenity
TYPICAL AMENITIES	Multiple athletic fields and/or special events area, basketball, tennis, and volleyball courts, multiple playground areas park trails, benches, multiple restrooms, vending machines, or concession areas, multiple picnic areas, large shelters, and grills, large parking areas, specialized facilities staff and maintenance buildings



METRO PARK (MP)

DEFINITION	A municipal outdoor recreational facility that provides a high level of outdoor recreational amenities that may include those amenities found at community parks, but may also include multiple game-quality athletic fields, skate parks, and/or disc golf courses. A metro park serves various ages, with emphasis on organized sport group activities and potential protection of natural areas. Metro parks are built and designed typically for a three to four hour experience. Metro Parks may be capable of holding special events.
SIZE	50.1 to 100 acres
STAFFING	Staffed full-time with municipal employees
UTILITIES	Water, electric/power, telephone, sewer
EXISTING SITES	Bayville Farms Park, City View Park, Great Neck Park, Munden Point Park, and Red Wing Park
UNIQUE AMENITIES	Multiple athletic fields, skate parks, and/or disc golf courses
TYPICAL AMENITIES	Basketball, tennis, volleyball courts, multiple playgrounds, large open play areas, park trails and benches, restrooms and vending machines or concession areas, multiple picnic areas, large shelters, and grills, large parking areas, kiosks, and staff/maintenance buildings



(Top photo): Great Neck Park and adjacent Community Recreation Center

(Immediately above): Stone wall trail at Bayville Farms Park





(Top photo): Woodstock Community Park
(Immediately above): Providence Park

COMMUNITY PARK (CP)

DEFINITION

A municipal outdoor recreational facility that provides a mid-range level of outdoor recreational amenities that may include amenities found at neighborhood parks and at metro parks. A community park would service various ages, with emphasis on organized sport group activities and potential protection of natural areas. Community parks are built and designed typically for a two to three hour experience.

SIZE

15.1 to 50 acres

STAFFING

Community parks are not generally staffed full-time. However, these parks may be staffed during programmed events by municipal staff or private/non-profit organizations.

UTILITIES

Water, electric/power, telephone, sewer

EXISTING SITES

Beach Garden, Carolanne Farms, Dunwoody, Lynnhaven, Ocean Lakes, Plaza/Northgate, Providence, Three Oaks, Williams Farm, Woodbridge, Marshview, and Woodstock

TYPICAL AMENITIES

Multiple athletic fields, basketball, tennis, and volleyball courts, playground areas, park trails, benches, restrooms, vending machines, or concession areas, multiple picnic areas, large shelters, and grills, large parking areas, specialized facilities staff and maintenance buildings



NEIGHBORHOOD PARK (NP)

DEFINITION

A municipal outdoor recreational facility that provides a basic level of outdoor recreational amenities. Limited non-organized sport group activities are encouraged. This park would service various age groups with emphasis on the youth. In some cases, limited parking is provided in existing neighborhood parks. A neighborhood park is built and designed typically for a one to two hour experience and shall be customized and designed for the demographic groups who use the park.

SIZE

Small Neighborhood Park: 0.25 - 5 acres
Large Neighborhood Park: 5 - 15 acres

STAFFING

These parks are not staffed.

UNIQUE AMENITIES

Unlit practice diamonds and rectangular athletic fields, basketball, tennis, and/or volleyball courts, playground equipment, open play areas, park trails, benches, small shelters and picnic tables



(Top photo): Playground, shelter and other amenities at Buyrn Farm Park
(Immediately above): Children play at Bellwood Estates Neighborhood Park





(Top photo): Waterfowl at Stumpy Lake Natural Area
(Immediately above): Fishing at Lake Lawson/Lake Smith Natural Area

NATURAL AREA (NA)

DEFINITION	A municipal preservation area whose primary purpose is to preserve the indigenous vegetation and wildlife in order to serve as green infrastructure and as a scenic environment for Virginia Beach residents to enjoy. Natural Areas include areas for protection and management of the natural/cultural environment with recreation use as a secondary objective. Recreational use might include passive recreation activities such as hiking, birding, and environmental education, but may also include public waterway access improvements, public fishing opportunities, and trail connections.
SIZE	There are no specific standards for size or acreage other than they shall be sufficient to protect the resource and provide for appropriate usage.
STAFFING	Natural Areas can be staffed full-time or part-time; also, these parks may be staffed during programmed events or activities by municipal staff or private/non-profit organizations.
UTILITIES	Water, electric/power, and sewer as needed
UNIQUE AMENITIES	Natural or cultural elements to be preserved
TYPICAL AMENITIES	Park trails, overlooks, benches, water access, picnic tables, shelters, and kiosks



OPEN SPACE PRESERVATION AREA (OSPA)



(Top photo): Aerial view above Pleasure House Point Natural Area (Immediately above): Wooded trail at Marshview Park

DEFINITION

A municipal preservation area whose primary purpose is to preserve the indigenous vegetation and wildlife in order to serve as green infrastructure and as a scenic environment for Virginia Beach residents to enjoy. The difference between OSPA sites and Natural Areas is that OSPA sites are generally smaller in size and interspersed throughout the city in order to provide a natural setting and visual relief from the built environment. OSPA sites include dedicated watersheds or natural/non-developed areas. Recreational use might include passive recreation activities such as hiking, birding, and environmental education, but may also include public waterway access improvements, public fishing opportunities, and trail connections.

SIZE

There are no specific standards for size or acreage other than they shall be sufficient to protect the resource and provide for appropriate usage.

STAFFING

Open space sites are not staffed

UTILITIES

Water, electric/power, and sewer are not needed

UNIQUE AMENITIES

Natural or cultural elements to be preserved

TYPICAL AMENITIES

Park trails, overlooks, benches, water access, and picnic tables





(Top photo): Grommet Island Park
(Immediately above):
Princess Anne Commons
Gateway Park

SPECIAL USE PARK (SU)

DEFINITION

A municipal recreational facility that serves a specific purpose. Special use sites include athletic complexes, golf courses, recreation centers, and water access sites. Each type of site may have specialized design and facility service standards, which are addressed more specifically in the Department of Parks and Recreation strategic plan. However, the buildings and fixtures shall incorporate the standards and recommendations here in.

SIZE

Varies

STAFFING

Most of the special use sites are staffed full time with municipal employees. However, certain water access sites may not require staffing.

UTILITIES

All but the water access sites shall have water, power, telephone, and sewer.

SPECIAL USE SITE TYPES

- Athletic Complexes
- Recreation Centers
- Water Access Sites
- Resort Area Parks
- Gateway Parks



LINEAR PARK (LP)

DEFINITION

Linkages are built connections or natural corridors that link community destinations together. Typically, the linear park is developed for one or more modes of recreational travel such as walking, jogging, biking, in-line skating, hiking, and horseback riding.

SIZE

The size of the overall corridor varies, although where a trail is proposed, a minimum corridor width of 30' is recommended.

STAFFING

Linkage sites are generally not staffed full time. Ideally, adjacent municipal or non-profit staffed destinations could serve as periodic staff for these areas.

UTILITIES

None required, however along certain areas lighting, call boxes, and/or other utilities may be desired.

TYPICAL AMENITIES

Trails, overlooks, benches, bike racks, picnic tables, kiosks and shelters (if appropriate)



Pedestrians push baby strollers on South Beach Trail





(Top photo): Neptune Park at 31st Street on the Oceanfront
(Immediately above): Night time view of King Neptune public art at Neptune Park

TOWN GREEN (TG)

DEFINITION	A central focal point and gathering area within an urban development area. Town Greens are typically publicly-owned rectangular spaces occupying an entire development block. Town Greens consist of open lawn, landscape area and walkways that accommodate informal active and passive recreation as well as large scale events. Parking is provided by surrounding on-street spaces or nearby public parking garages.
SIZE	1 - 5 acres
STAFFING	Staffed only during events
TYPICAL AMENITIES	Outdoor stage, open play areas, playgrounds, park trails and benches, restrooms, picnic shelters, tree plantings, pedestrial scale lighting
UNIQUE AMENITIES	Seat walls, vendor spaces, outdoor art feature



ECO-GARDEN (EG)

DEFINITION

The primary purpose of these park areas is to manage stormwater with infrastructure technology that mimics natural eco-systems and provides storage and quality treatment for adjustment development. Recreational use is necessary, secondary objective and might include passive recreation activitis such as walking paths, trail nodes, seating areas, picnic areas and environmental education or more active recreation such as skate ramps and event stages. Eco-Gardens can be located on public or private property.

SIZE

1/4 acre to 10 acres

STAFFING

N/A

TYPICAL AMENITIES

Rain gardens, water gardens, bio-retention planting beds, fountains, green roof gardens, permeable pavers, tree plantings, walking paths, kiosks, seating

UNIQUE AMENITIES

Picnic tables, cafe tables, pedestrian scale lighting, outdoor art feature



(Top photo): Eco-Garden at Kellam High School
(Immediately above): Roof Garden at College Park Elementary School





(Top photo): Sunny day at Town Center Plaza (Immediately above): Outdoor plaza at the Sandler Center for the Performing Arts

URBAN PLAZA (UP)

DEFINITION	A small urban open space that is surrounded by buildings with high density mixed uses. Urban Plazas are typically paved and provide opportunities for social interaction. Urban Plazas accommodate frequent small gatherings and events such as an art show or farmers market. Urban Plazas are located either on public property or on private property with an easement dedicated for public use.
SIZE	1 acre or less
STAFFING	Staffed only during events
UTILITIES	Electric power
TYPICAL AMENITIES	Tree plantings, outdoor cafe seating, benches, transit stop, pedestrian scale lighting
UNIQUE AMENITIES	Fountains, seat walls, decorative pavers, outdoor art feature





FEATURE REQUIREMENTS BY CLASSIFICATION

PARK PERIMETERS

Parks are located in areas of varied topography with diverse environmental qualities and shall be designed to avoid adjacent land use impacts.

ACCESSIBILITY

All sites shall be easily accessible to the public by all modes of transportation: vehicular, bicycle, and pedestrian. ADA accessibility shall be accommodated at all sites to the fullest extent feasibly practical.

	SP	MP	CP	NP	NA	OSPA	SU	LP	TG	EG	UP
Water Fountains	x	x					x			x	
Restroom	x	x					x		x		
Trail Linkages	x	x	x	x	x	x	x	x	x	x	x
Signage	x	x	x	x	x	x	x	x	x	x	x
Fencing	x	x	x	x			x		x	x	x
Landscaping	x	x	x	x			x	x	x	x	x
Irrigation	x	x					x			x	
Parking	x	x	x		x		x		x	x	
Trash Receptacles	x	x	x	x	x		x	x	x	x	x
Bicycle Racks	x	x	x	x	x		x	x	x	x	
Park Benches	x	x	x	x	x		x	x	x	x	x
Security Lighting	x	x					x	x	x	x	x
Shelters	x	x	x	x	x		x		x	x	
Picnic Tables	x	x	x	x	x		x	x	x	x	x
Grills	x	x	x				x				
Playground	x	x	x	x			x		x		
Walking/Jogging Path	x	x	x		x		x	x	x	x	
Maintenance Building	x	x					x				

SECTION TWO

Specialized Facilities



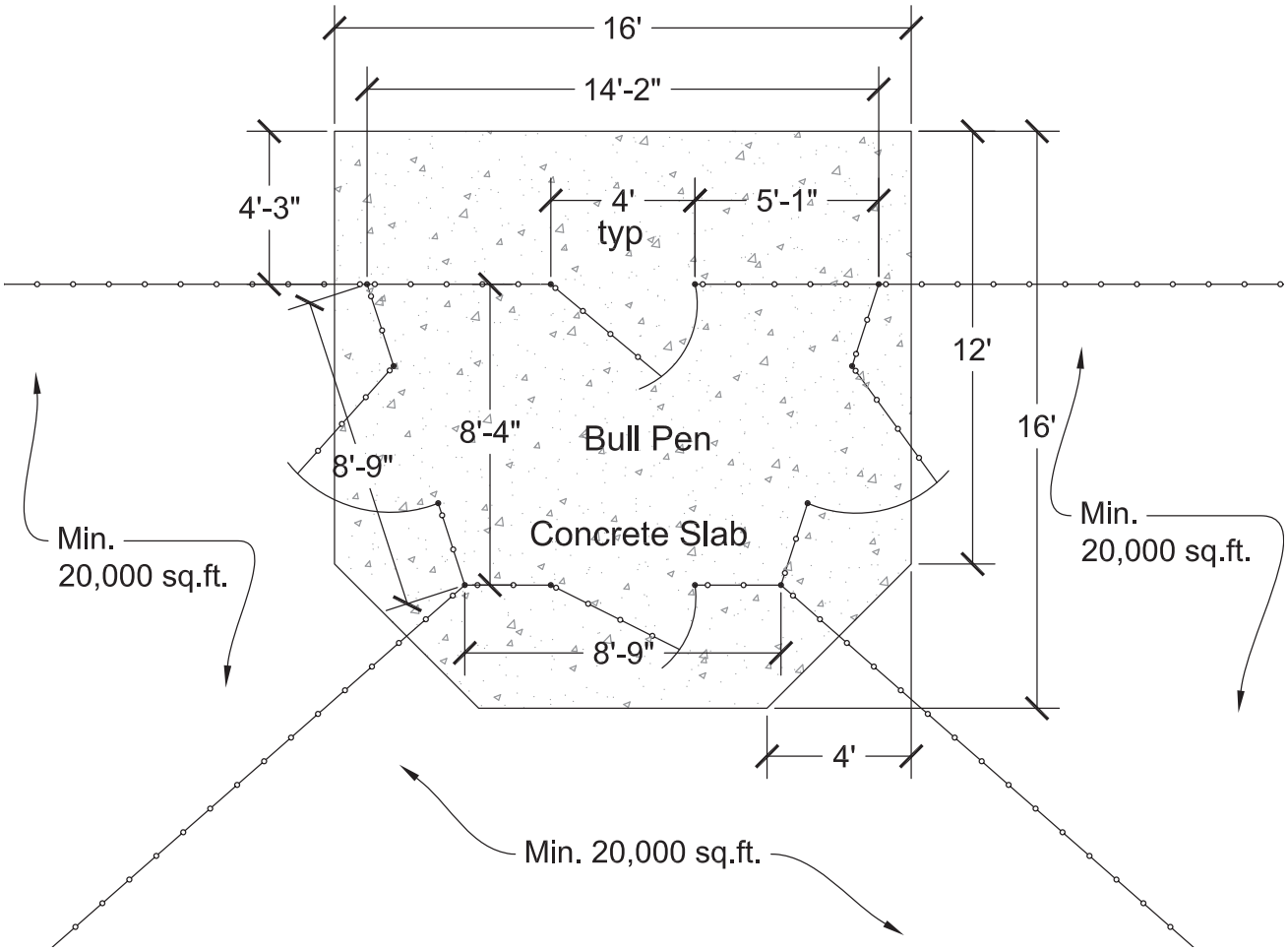



Dogs play leash-free at the dog park at Red Wing Park

DOG PARK

DEFINITION	Enclosed fence area where dogs are able to freely run off leash
SIZE	1.3 acre minimum
FENCED AREA CLASSIFICATIONS	three (3) areas, one (1) small dogs & two (2) "all dogs"
FENCE TYPE	4' high black vinyl coated chain link fence shall enclose the dog park areas
ENTRY/EXIT	Fenced area with four (4) gates. The bull pen area should be located on a concrete slab. The slab should also extend out at the entry/exit points in order to minimize the high use impacts on the area. All gates shall be ADA accessible.

PET WATER FOUNTAIN DETAIL

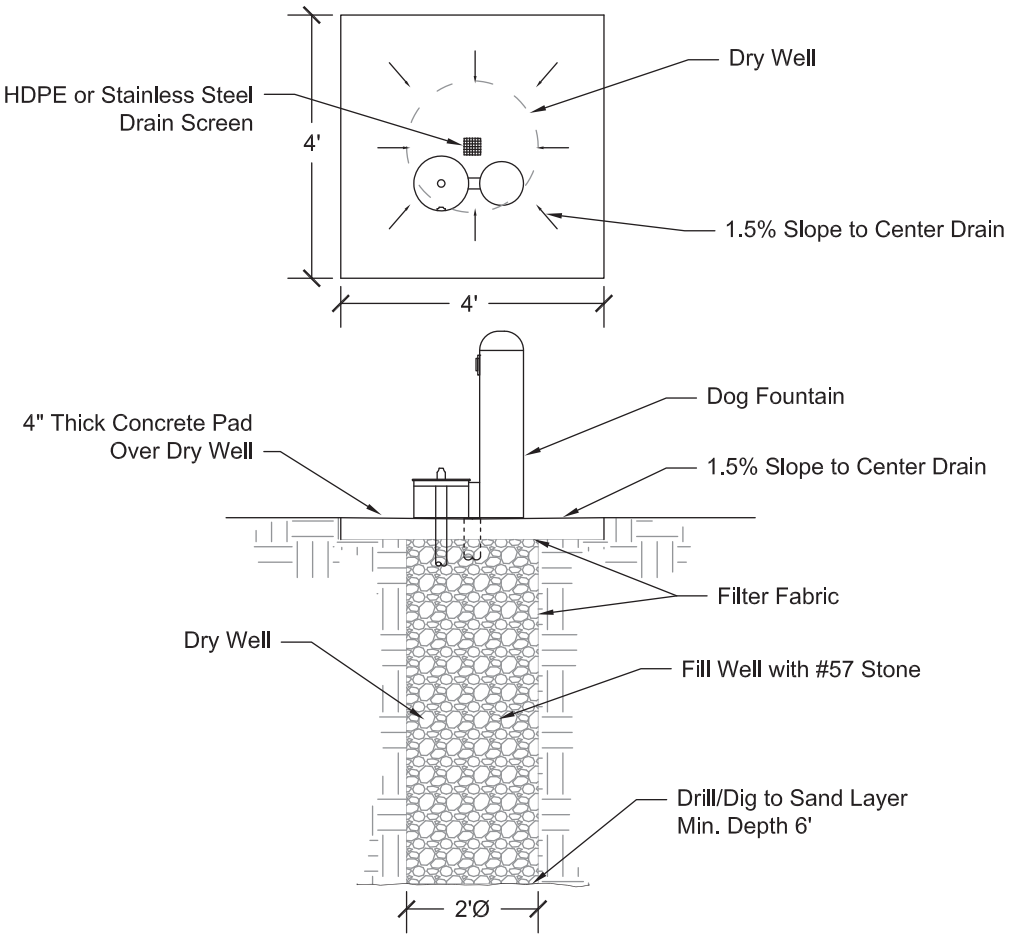

BENCHES

A minimum of three (3) benches shall be located within the dog park areas.

TRASH RECEPTACLES /BAG DISPENSERS

Trash receptacles shall be anchored onto concrete pads and within the fenced areas. Dog bag dispensers shall be located within the fenced areas.

SHADE TREES /SHADE STRUCTURES

Shade trees shall be located within the perimeter of the fenced areas. Canopy coverage should ultimately shade at least 1/3 of the dog park areas otherwise shade structures are required. When tree canopy is not available, structured shade for each fenced area should be considered.

PET WATER FOUNTAINS

Pet fountains should be located within each fence dog area near the entrance. The pet fountains shall also have an enclosed hose bib and be constructed over a stone-filled dry well.

LAWN

The dog park areas should be rotated as needed between the three (3) areas allowing lawn areas to recover.



An owner and his dog play leash-free at the dog park at Bayville Farms Park

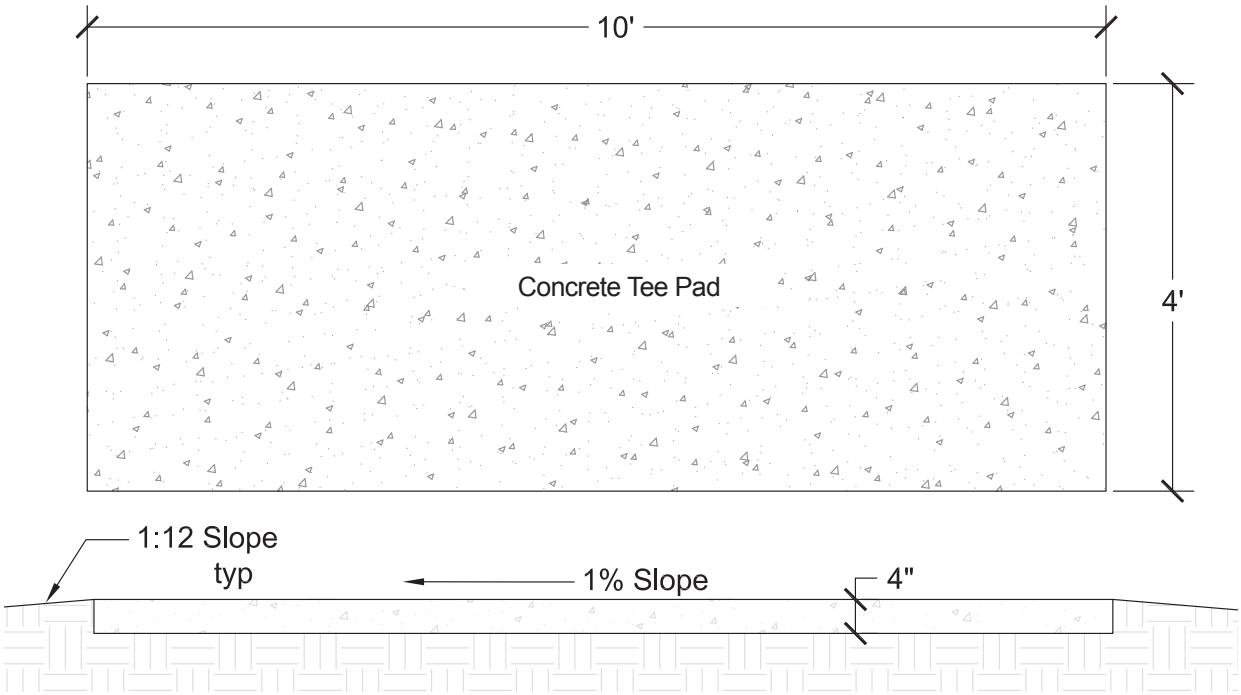



Disc golf target with base at Bayville Farms Park

DISC GOLF

DESCRIPTION

Disc golf is played much like traditional golf, except players use a flying disc instead of a ball and clubs. A golf disc is thrown from a tee pad area to a target, which is an elevated basket.

AREA REQUIRED

Ideally, a well-balanced course has a mixture of holes that go completely through wooded areas, and also open areas. Typically, fairways in wooded area range from 20-40 feet wide. Small recreational courses can usually fit two (2) to three (3) holes per acre depending on the terrain.

LAYOUT

Fairways should not cross one another (if possible) and should be far enough apart so errant throws do not become a safety hazard for other players. Avoid installing fairways that are close to public streets, sidewalks and other areas where non-players congregate.

LENGTH

Course for recreational players should average less than 250 feet per hole, although, no hole should be shorter than 120 feet.

HOLE COUNT

Most courses are either nine (9) or eighteen (18) holes.

TEE PADS

Two (2) 4' x 10' x 4" thick 3000 psi fiber reinforced with a heavy broom/raked finish tee pads shall be located for each hole. This will provide opportunities for players of varying skill levels. Tee pads shall be level from left to right. The maximum slope from front to back shall be 1%.

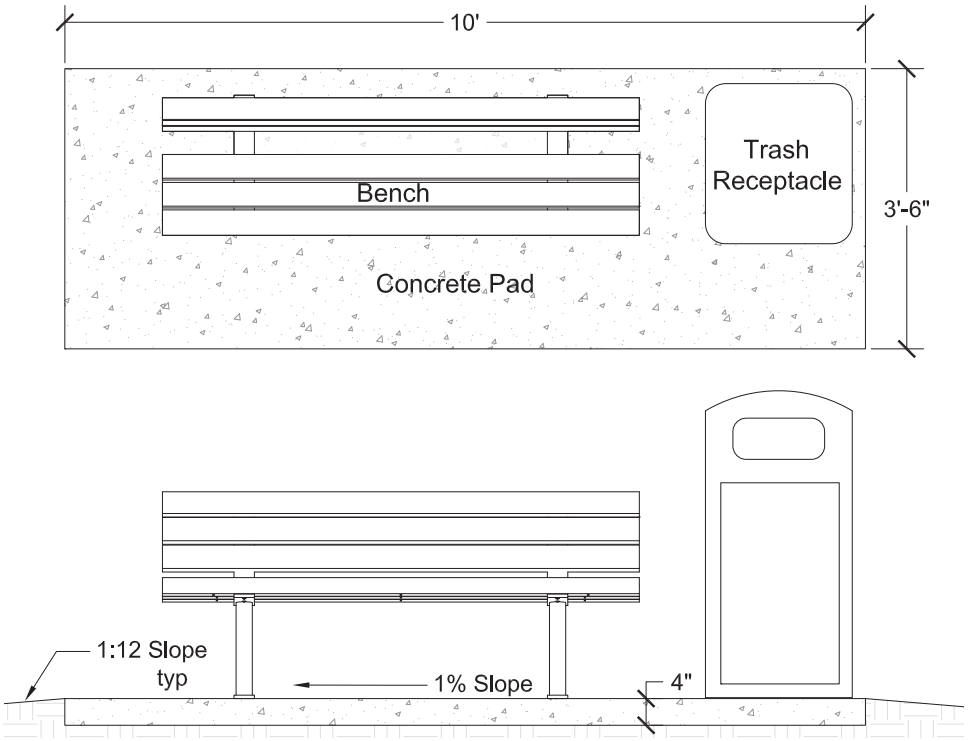

SIGNS

Install a rules sign prominently before the first tee. All tee pads on each hole should have permanent signs indicating the hole number, length, and recreational par.

EXISTING COURSES

Bayville Farms Metro Park and Munden Point Metro Park

BENCHES /TRASH RECEPTACLES

Bench/trash receptacle concrete pad shall be located near the tee pad area. The bench/ trash receptacle concrete pad will be 3.6' x 10' x 4" thick 3000 psi fiber reinforced with a light broom finish. Trash receptacles & Benches maybe located on a separate concrete pads. (See Site Furnishings section for concrete pad dimensions)

DISC GOLF TARGET WITH BASE

All parts of disc golf targets shall be hot dipped galvanized steel or stainless steel. Targets shall have 24 chains, minimum 2/0 straight link. Poles shall be minimum 1 7/8" OD. Collars for attaching basket shall be a minimum of 5" long, and chain rack collar shall be a minimum of 4" long. Locking bases for disc golf targets shall be 18" long minimum.

ADA COMPLIANCE

Efforts shall be made to provide a legitimate opportunity to play for those with disabilities. If all holes cannot be made accessible, a hole route on part of the course may provide that opportunity.





(Above) Skaters enjoy the concrete course at Williams Farm Skate Park; (immediately above) shade canopies protect the viewing area bleachers at Mount Trashmore Skate Park

SKATE PARK

TYPES	Above ground street course and skate spots located on a concrete slab, concrete skate parks and plazas shall be used based on funding and site constraints.
ACREAGE	Signature/Metro Parks shall have minimum 1 acre; Community Parks shall have minimum 1/2 acre, and skate spots shall have minimum 1,000 square feet. All shall have 50% rideable area.
SLAB FINISH	Power trowel to a smooth finish. After curing, allow concrete to air dry. Apply one coat of industrial grade sealer.
DESIGN	Skate parks shall be designed by an experienced and qualified skate park designer.
PERIMETER FENCING	6-foot tall black vinyl coated chain link fence surrounding the skate park area with one gated entrance point is optional.
BUILDINGS	An optional small building or shelter may be located at the skate park. Power may be installed for attendant building and special events.
VIEWING AREAS	Viewing areas around the skate park shall be included in its design. These areas shall include such items as bleachers, picnic tables, shelters, benches, etc. Shade trees shall be located to provide shade over these areas.

SECTION THREE

Buildings







Attendant booth at Little Island Park (top left); concession area at Providence Park (top right).

BUILDINGS

DESCRIPTION

Buildings located in parks include restroom facilities, park offices, storage buildings, etc. All buildings located on a site shall complement each other and the surrounding environment in scale, materials and placement and always meet or exceed ADA compliance.

BUILDING ORIENTATION /ENTRY

Entrances shall face or be clearly visible from an adjacent public street or associated parking area. The primary entry shall be clearly identified by articulation of the building mass or other architectural design solution. The main entry shall be more visually dominant than service area entries.

BUILDING MASSING

Park offices, restroom facilities, and storage needs shall be incorporated into single buildings. The massing or three-dimensional form of larger buildings shall be broken into smaller components that more readily relate to the human scale.

BUILDING FAÇADE

The design of the building façade shall incorporate elements that help to break up long, undifferentiated walls or sides. Buildings shall also incorporate design features and architectural elements that relate to the scale of pedestrians such as covered entryways. Split face block or hardy plank shall be used on all facades. (Tan or Gray in Color)

ROOF MATERIALS

Standing seam aluminum roof (Gray or Blue in color)

BUILDING TYPES

PARK OFFICES

Park offices shall be conveniently located adjacent to the primary parking facility/entrance drive and be heated and cooled.

RESTROOMS

Restroom facilities may be located within the park office building or located strategically throughout the park. These buildings shall be heated.

STORAGE BUILDINGS

Where storage needs are not able to be accommodated within other buildings on the site, separate storage buildings can be constructed. However, these buildings shall be constructed in a similar style as other buildings of the site and associated outdoor storage areas shall be screened from view.

TICKET BOOTH AT LITTLE ISLAND PARK

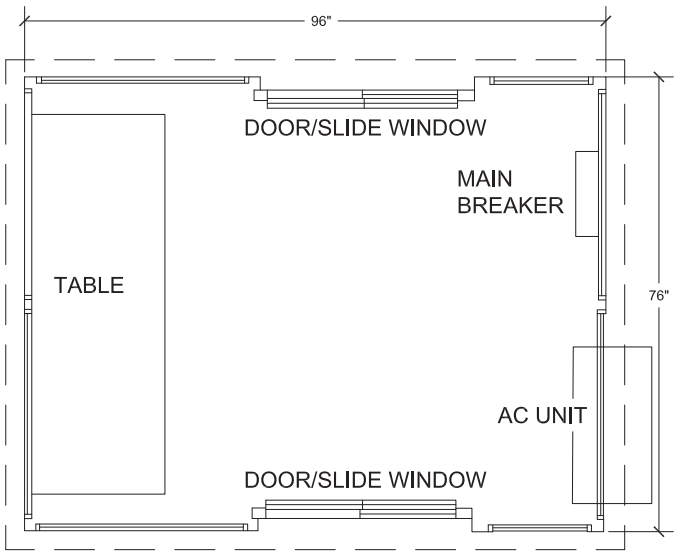



TYPICAL PARK RESTROOM BUILDING DESIGN

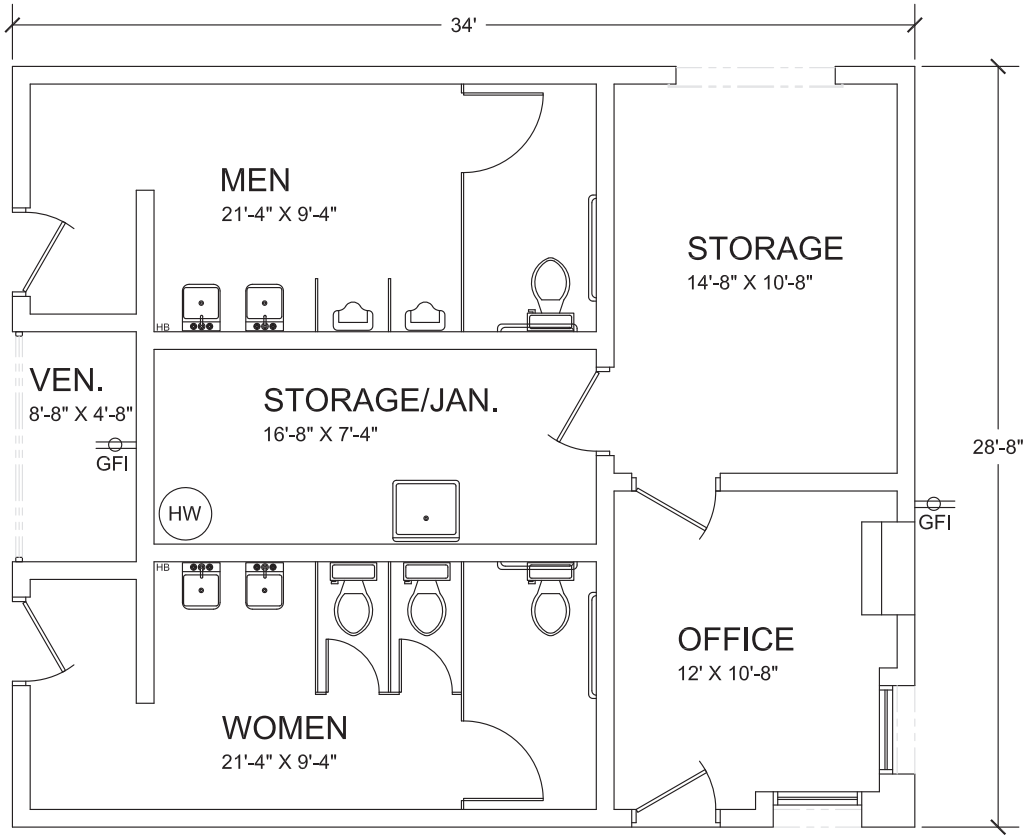

SECTION FOUR

Parking Lots

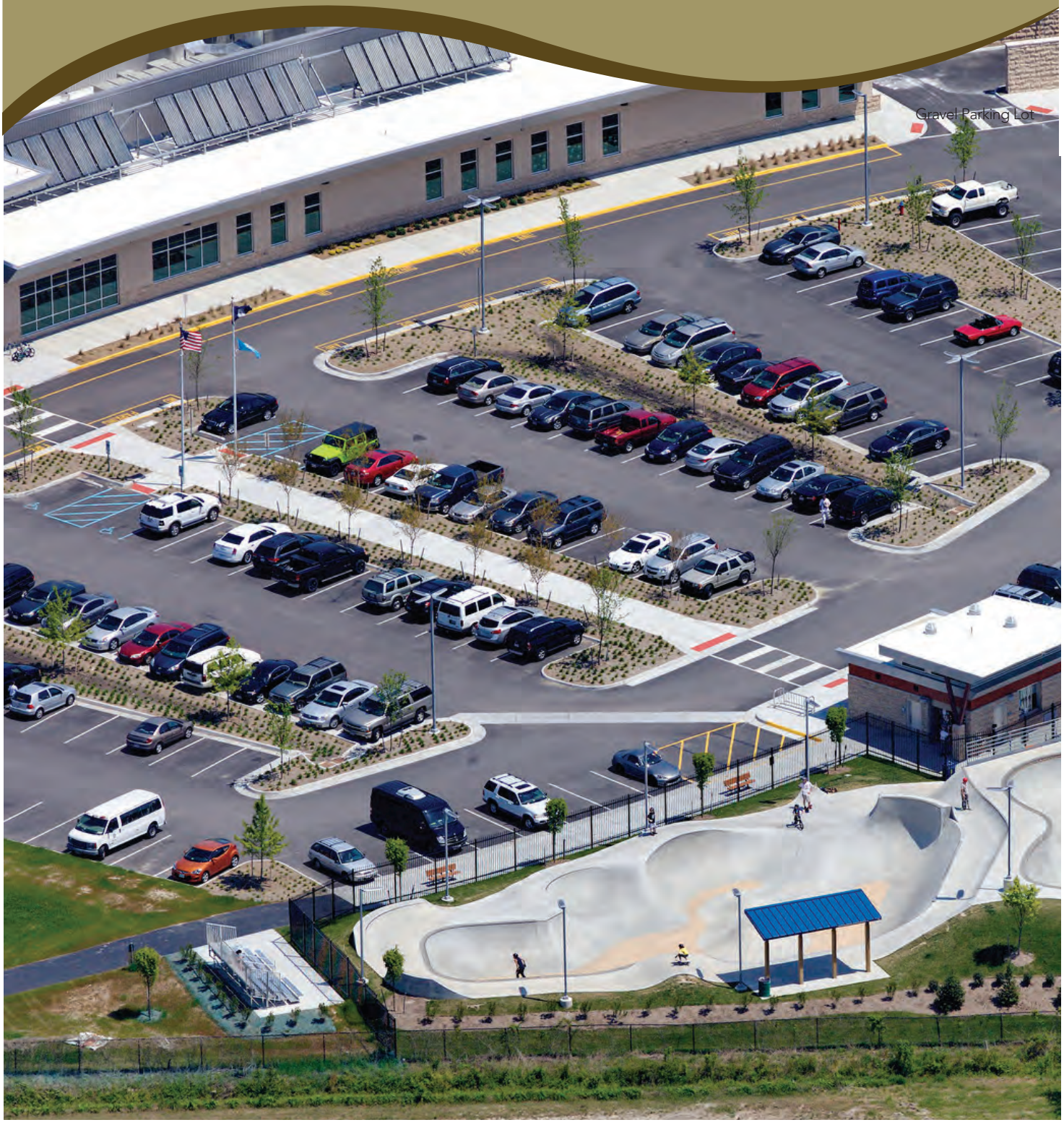



Pervious parking lot at Stumpy Lake Natural Area

PARKING LOT

General Standards

DESCRIPTION

Parking lots shall be designed to provide safe and convenient access to the site and its facilities. A variety of paving options exist within the Virginia Beach park system. Parking requirements will vary from little to no need for off-street parking at many neighborhood parks, to the need for large off-street parking lots at more active community and district parks.

The design of parking lots shall be in conformance with the following:

1. City of Virginia Beach Zoning Ordinance, most recent edition
2. AASHTO's policy on Geometric Design of Highways and Streets, most recent edition
3. Americans with Disabilities Act/State and Federal Handicap Standards

Low Impact Development (LID) Standards

Parking lots shall incorporate methods for storm water management utilizing LID techniques. These include:

- End of island bioretention cell(s) with underdrain(s) and landscaping
- Bioretention cells or drainage inlets (or curb cuts) in the end-of-island bioretention cells and bioretention strips to collect runoff
- Bioretention cells between lines of parking stalls to increase the total treatment surface area of these systems
- One-way drive aisles to reduce impervious surfaces, where appropriate
- Permeable paving systems where appropriate. Where it is not feasible for the entire parking lot, it shall be considered for portions of the parking lot such as overflow areas and/or parking stall areas.

SAFETY

Pedestrian movement in parked vehicle areas must be planned to provide the highest degree of safety and convenience. Plans for parking lots shall include pedestrian circulation incorporating walkways, narrowed crossways, and striped paving. Proposed landscaping shall ensure the visibility and separation of pedestrians from vehicular paths. Refer to the Americans with Disabilities Act/State and Federal Handicap Standards.

ENTRANCES/EXITS

All entrances and exits shall have a clear visibility zone. The zone will vary due to adjacent street widths and speeds. Entrances and exits shall be located either directly across from or as far as possible from street intersections.

BICYCLE ACCOMMODATION

Bicycle lanes and parking shall be provided, where appropriate, on ingress and egress routes and shall be consistent with standards identified and adopted by the City. Refer to the city's Bikeways and Trails Plan for the location of existing and proposed bicycle paths.

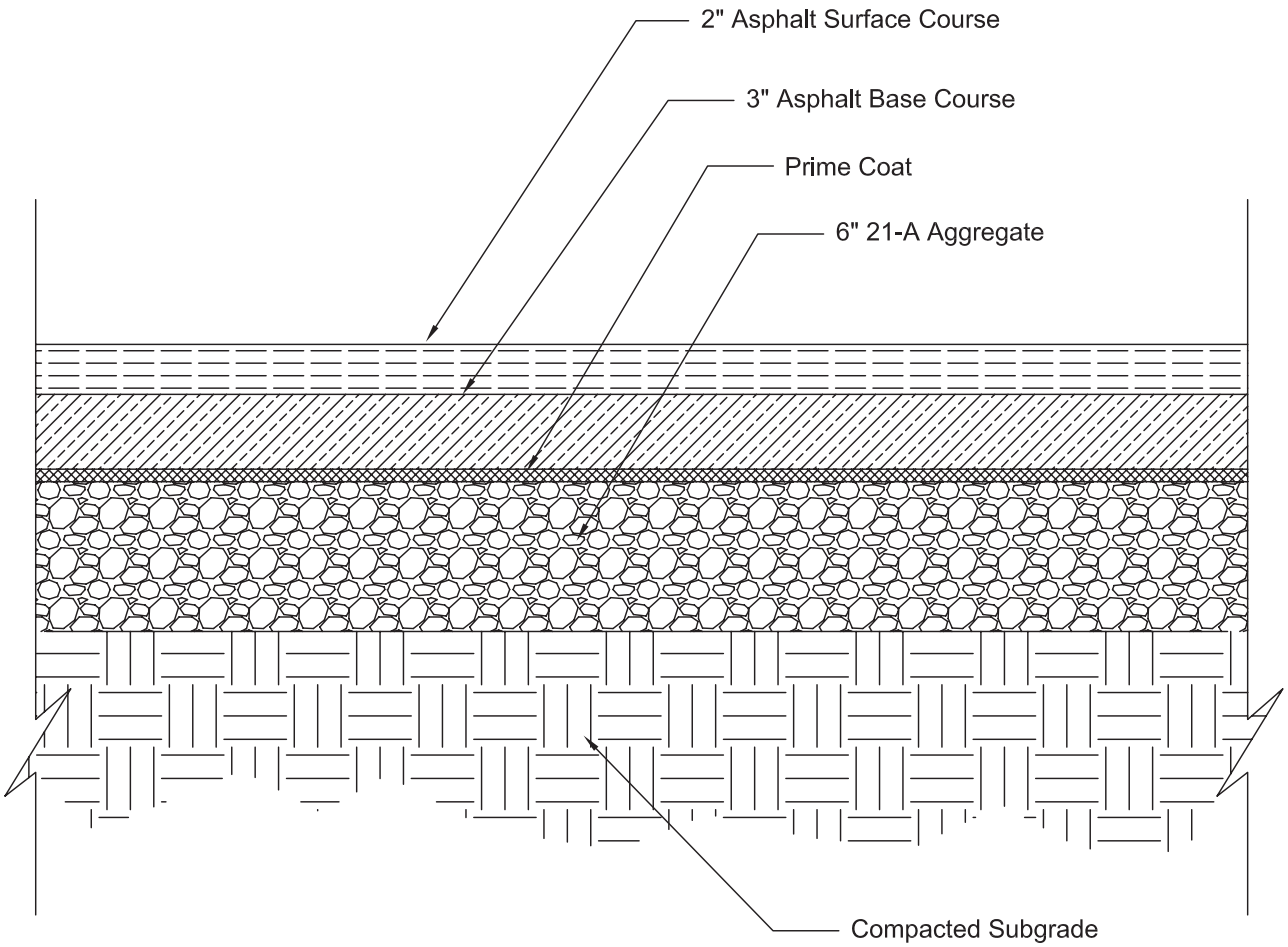

Asphalt Parking Lot

USE General standard for most applications

EDGING Encroachment barriers such as wheel stops or continuous concrete curbing of at least six (6) inches in height shall be preferred.

STALL WIDTHS Standard size parking spaces are 9′ x 18′. Utilize standard white thermoplastic striping to delineate all stalls.

ACCESSIBILITY GUIDELINES Provide a minimum of two 8′ x 18′ parking stalls with a central van accessible area.



Asphalt parking lot at Red Wing Park

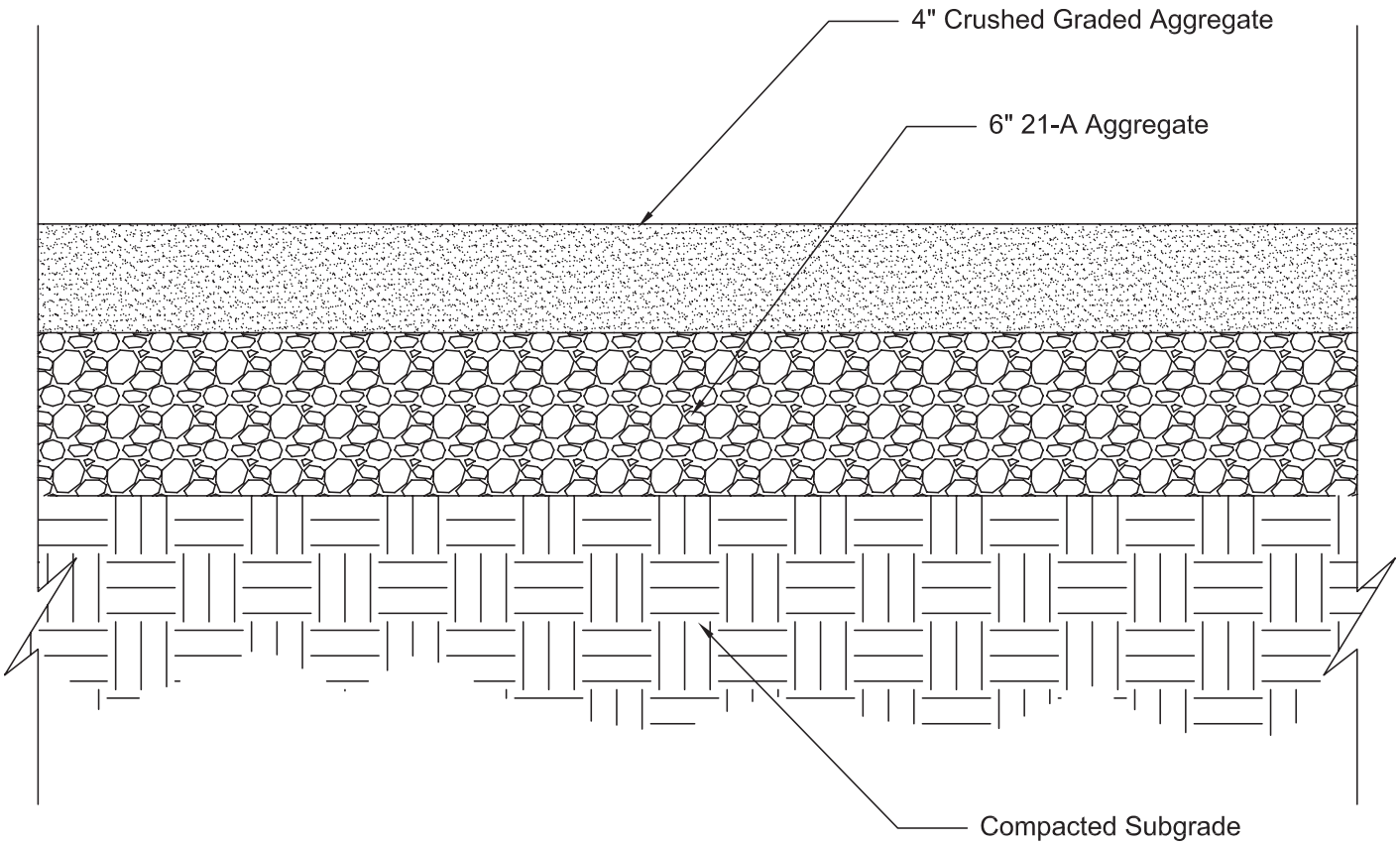



Gravel parking lot at Mount Trashmore Park near Kids Cove

Gravel Parking Lot

USE	Gravel parking areas shall only be utilized for low traffic and/or temporary parking areas.
EDGING	Encroachment barriers such as wheel stops of at least six (6) inches in height shall be required for parking spaces
STALL WIDTHS	Standard size parking spaces are 9′ x 18′
ACCESSIBILITY GUIDELINES	Provide a minimum of two concrete 8′ x 18′ parking stalls with a central van accessible area

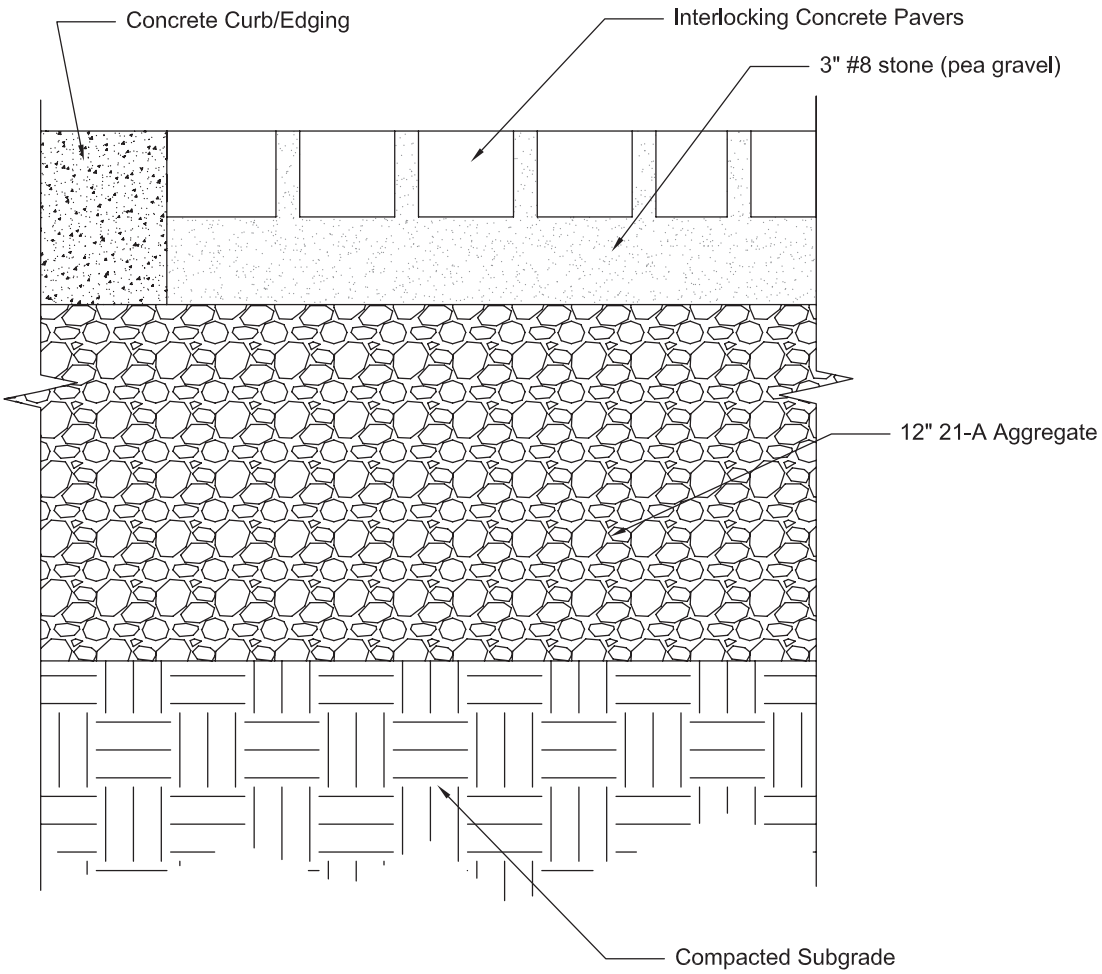

Pervious Parking Lot

USE

For use in environmentally sensitive areas or where a pervious pavement application is desired.

EDGING

Encroachment barriers such as wheel stops or continuous concrete curbing of at least six (6) inches in height shall be preferred. However, wood timbers may be acceptable in some applications.

STALL WIDTHS

Standard size parking spaces are 9′ x 18′. Utilize standard white thermoplastic striping to delineate stalls if paving material allows. Otherwise, utilize contrasting color pavers, or alternate patterns to delineate stalls.

ACCESSIBILITY GUIDELINES

Provide a minimum of two 8′ x 18′ parking stalls with a central van accessible area. Delineate stalls as stated above.



Pervious parking lot at Stumpy Lake Natural Area

SECTION FIVE

Planting Design

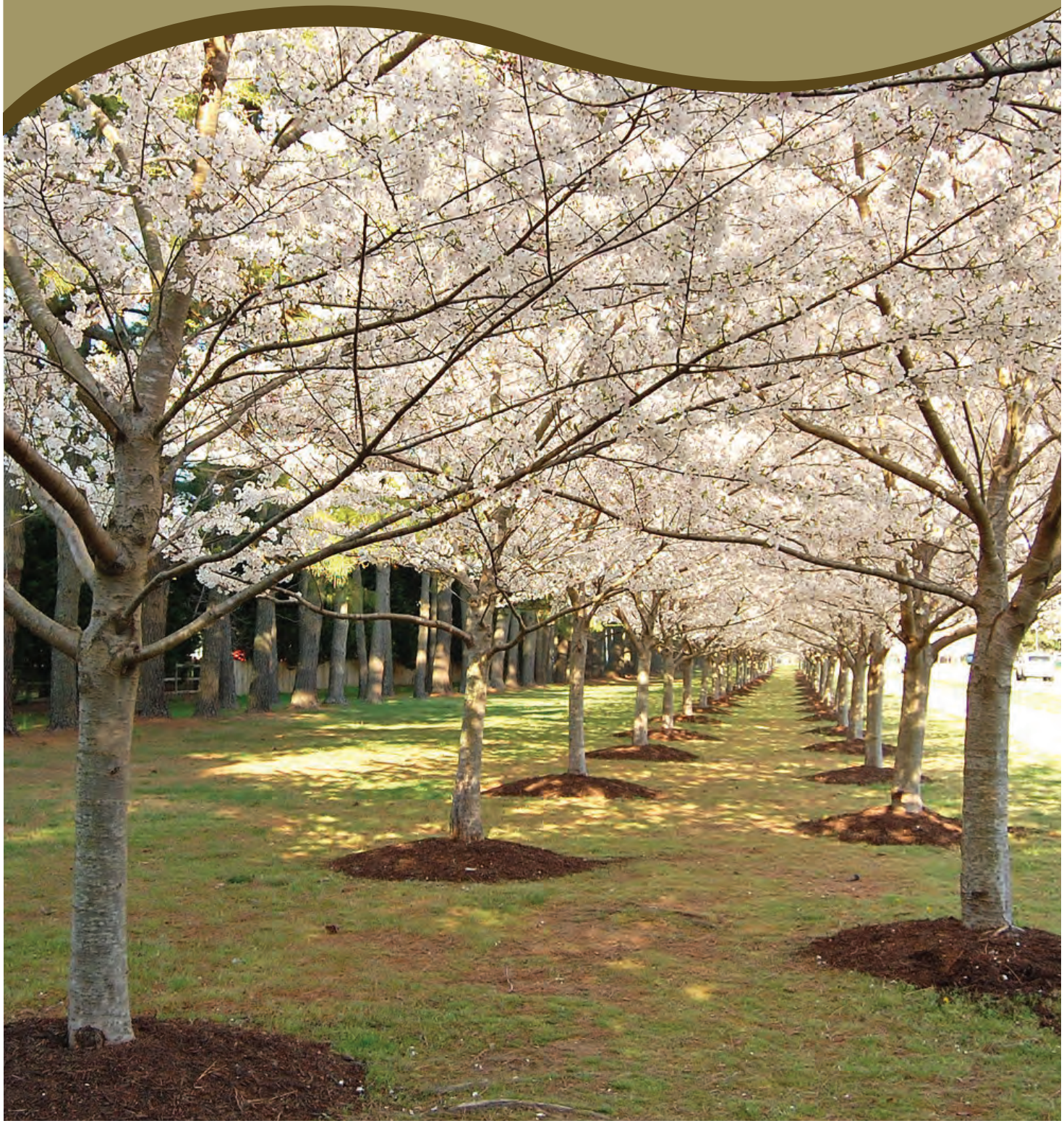





(Top left photo): Wildflowers grow along Princess Anne Road towards the Municipal Center

(Top right photo): Raised flower beds at Princess Anne Recreation Center

PLANTING DESIGN

Design Principles

DESCRIPTION

Plantings within city parks shall focus on creating a simple and natural design that blends with the site and area rather than an elaborate and formal landscape solution. Plants shall be located in random groupings to reflect natural environments. Avoid linear plantings except where special circumstances warrant that placement. The overall landscape plan shall address conditions of the site such as controlling erosion, filtering storm water, and screening of unsightly elements, creating shade and softening the appearance of structures. Avoid plantings that would restrict sight distance, require unusual maintenance, or interfere with already established indigenous plantings.

The following documents are hereby incorporated as part of these standards:

1. Refer to the City of Virginia Beach Landscape Guide or Integrated Site Design Guide, or most recent edition, for parking lot, foundation, screening and buffering, specifications and standards.
2. Refer to the American Nursery and Landscape Association, American Standard for Nursery Stock, most recent edition, for various nursery stock standards.

PLANT MATERIALS

Park landscape plans shall focus on the use of tree and shrub massing with limited perennial/annual beds.

PLAYGROUNDS

Landscape plans shall utilize large canopy trees (particularly on the south and west edges) of playground areas to provide and average of 50% shade coverage at maturity.

WOODED AREAS

Within wooded areas, do not remove the organic debris on the forest floor.

WATERWAYS

A 20' minimum vegetative buffer shall be incorporated around all water edges. Pedestrian access to the water's edge shall be limited to pre-determined areas. The vegetative buffer can either be a planted area utilizing bayscaping principles or an area where mowing is limited to two times a year at a 6"- 8" mow height. For waterways that are included in the Chesapeake Bay Resource Protection area, a minimum of 50' vegetative buffer shall be provided.

SAFETY

Safety and security of park patrons shall be considered in all plant selections and placement. Designers shall keep in mind the principles of Crime Prevention Through Environmental Design (CPTED).

BED PREPARATION & PLANTING DETAILS

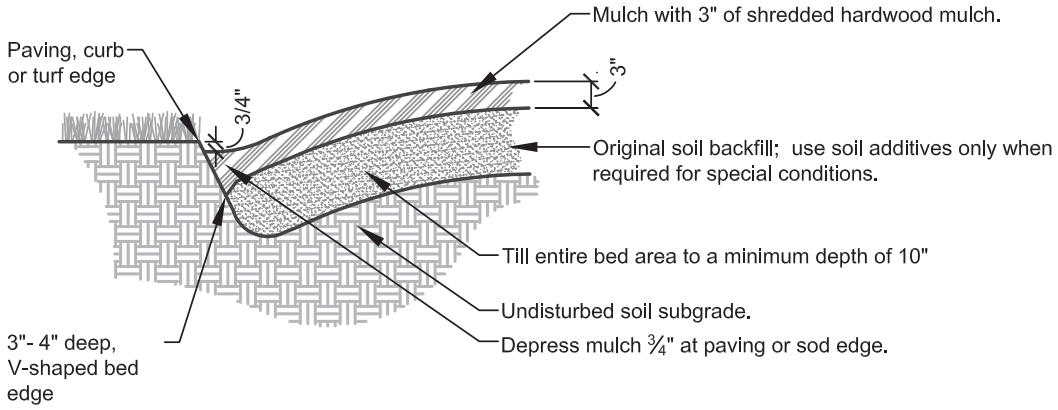

TYPICAL BED EDGE DETAIL

This detail is the minimum planting standard for container ornamental grasses, groundcovers and perennials.

All ornamental grasses, groundcovers and perennials shall be planted so that the top of the root collar is at the same grade, or slightly higher, than existing grade in accordance with accepted horticultural practice.

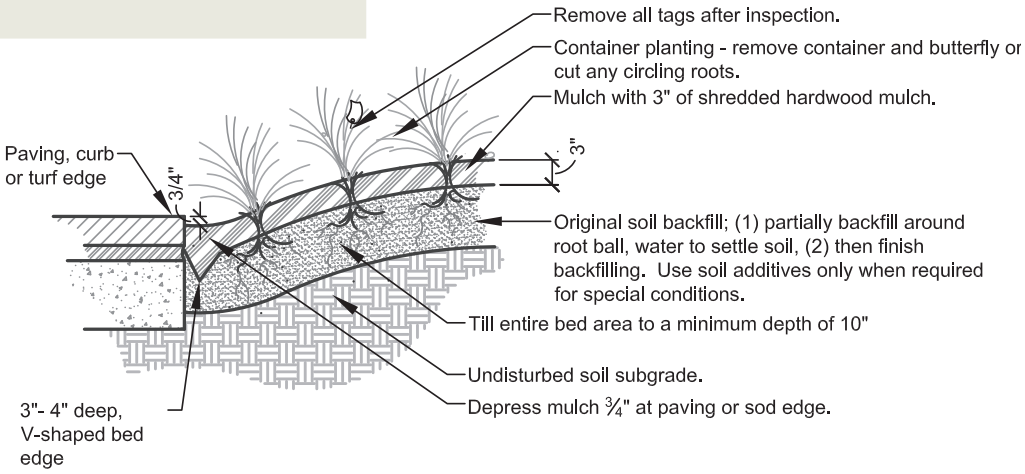

SPECIES SELECTION

The use of native and drought tolerant plant materials is preferred. Species that produce litter problems shall be limited to naturalized areas. Refer to the City's Landscaping Guide or Integrated Site Design Guide for recommended plant lists.

CITY STANDARDS

For more detailed and complete information refer to the City's planting and turf specifications.

BED PREPARATION

Place topsoil in areas where seeding and planting is scheduled. Topsoil shall be sifted, friable loam; free of subsoil, roots, grass, excessive amount of weeds, stone over 1" in any dimension, and foreign mat- ter; acidity range 9 (pH) of 5.5 to 7.5; containing a mini- mum of 4 percent and a maximum of 25 percent organic matter. Topsoil can be prepared on site, or off site as needed. Provide imported topsoil as required to com- plete the work.

MULCH

All planting areas shall be completely mulched with 3" of shredded hardwood mulch. Mulch shall not be mounded up around the trunks of trees. This can cause disease and decay, and shorten the life span of the tree and mulch.

PLANTING DATES

Planting of containerized trees, shrubs and ground covers shall normally be performed between September 1 and May 15 and under favorable weather conditions. All other dates will be considered out of season.



Native plantings dress up the facility sign at Salt Marsh Point Park

SHRUB PLANTING DETAIL

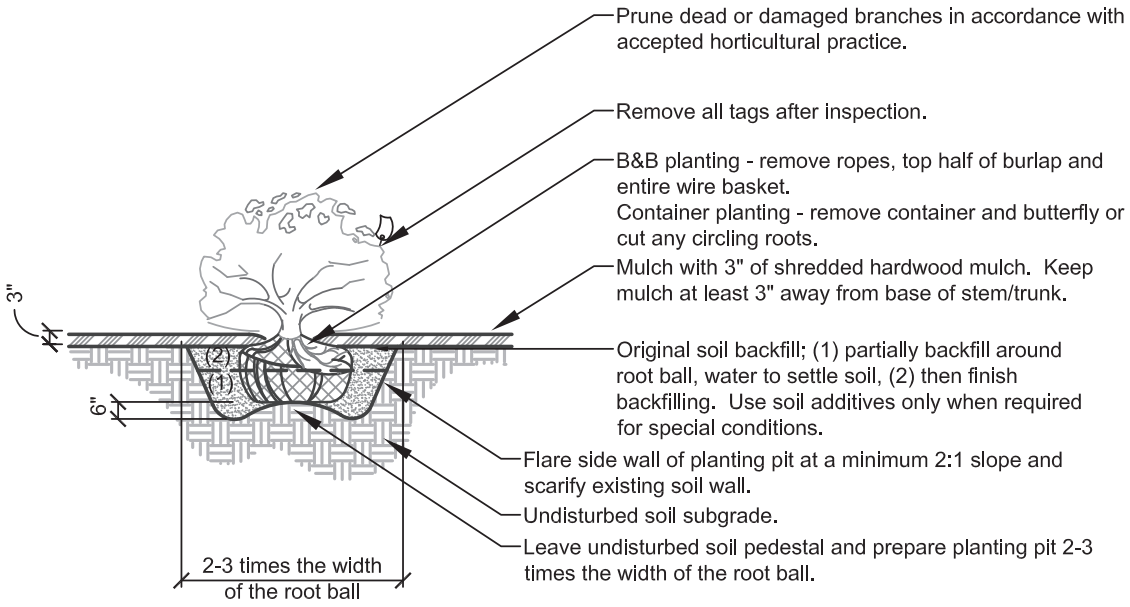

This detail is the minimum planting standard for container or balled & burlapped shrubs.

All shrubs shall be planted so that the top of the root collar is at the same grade, or slightly higher, than existing grade in accordance with accepted horticultural practice.

TREE PLANTING DETAIL

This detail is the minimum planting standard for container or balled and burlapped trees up to a 3"caliper.

All trees shall be planted so that the top of the root collar is at the same grade, or slightly higher, than existing grade in accordance with accepted horticultural practice.

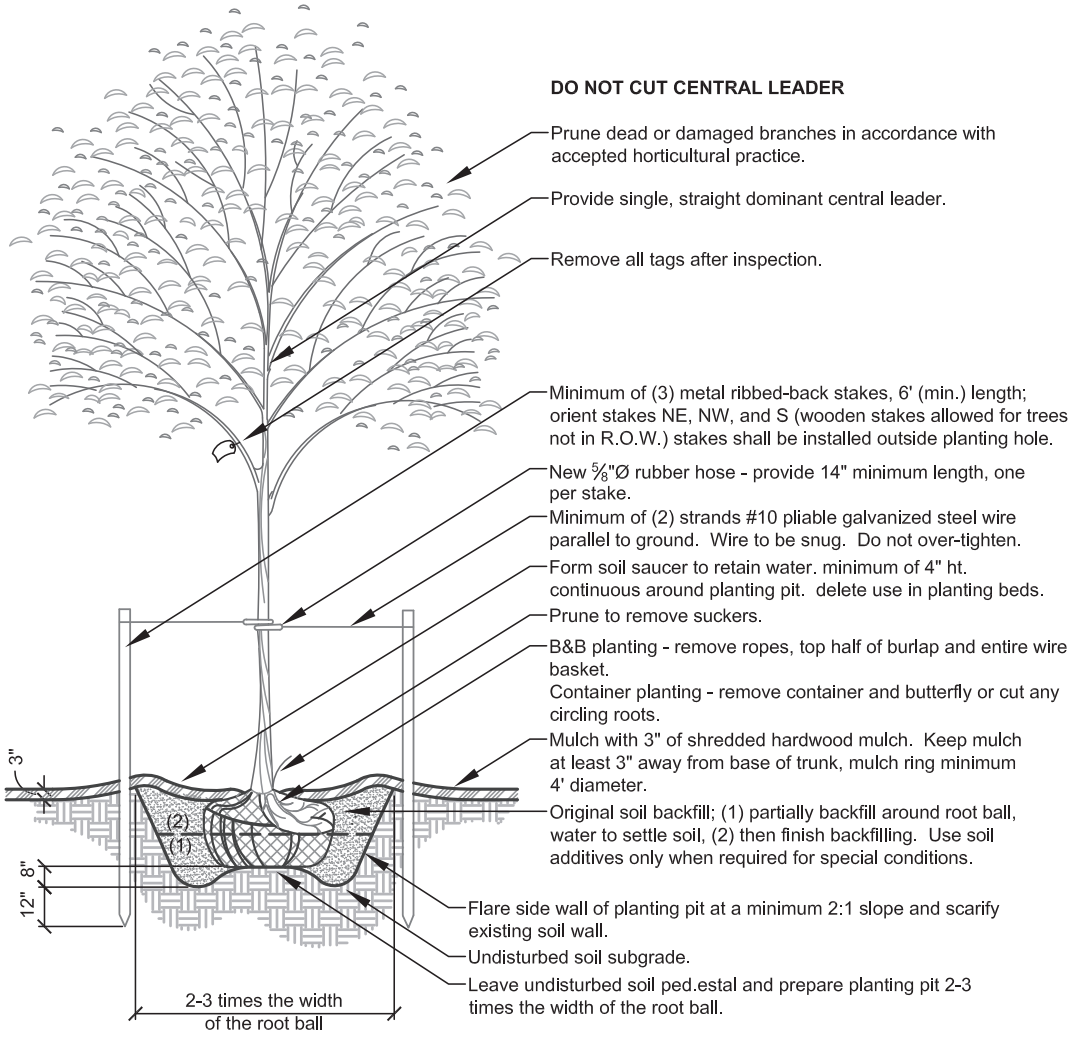

SECTION SIX

Fields





(Top photo): Extended backstop at Princess Anne Athletic Complex

BASEBALL/SOFTBALL FIELD

FIELD SPECIFICATIONS

Field specifications are broken out into three tiers based on intended use.

	Description	Soil Specifications	Irrigated	Lighted	Backstop	Minimum Parking
Tier 1	Tournament Quality Fields	Loamy Sand Infield Mix	Yes	Yes	Yes	75
Tier 2	League Fields	Loamy Sand Infield Mix	Yes	Yes*	Yes	50
Tier 3	Informal Multipurpose	Native Topsoil	No	No	Yes	60

** The installation of field lighting is desired but will vary from field to field depending on the surrounding land uses.*

LIGHTS Metal Halide with timed lighting control system

BACKSTOP 30-foot long center panel with 40-foot long wings on each side. Height: 30-feet

DUGOUT AREA The dugout area shall consist of a 36' x 8' concrete slab with two 15-foot long aluminum players' benches.

ORIENTATION A line running from home plate to second base shall point east-northeast. However, consider time of day for games and months when played.

GRADING/DRAINAGE Minimum slope of outfield turf is 1% with adequate subsurface drainage. Maximum slope 2-1/2%. Drain away from home plate. The infield shall be graded so that the baselines and home plate are level.

SAFETY BUFFER 10-foot minimum around the perimeter. No obstacles shall be located closer than 50-feet to a field.

BASEBALL/SOFTBALL FIELD DETAILS

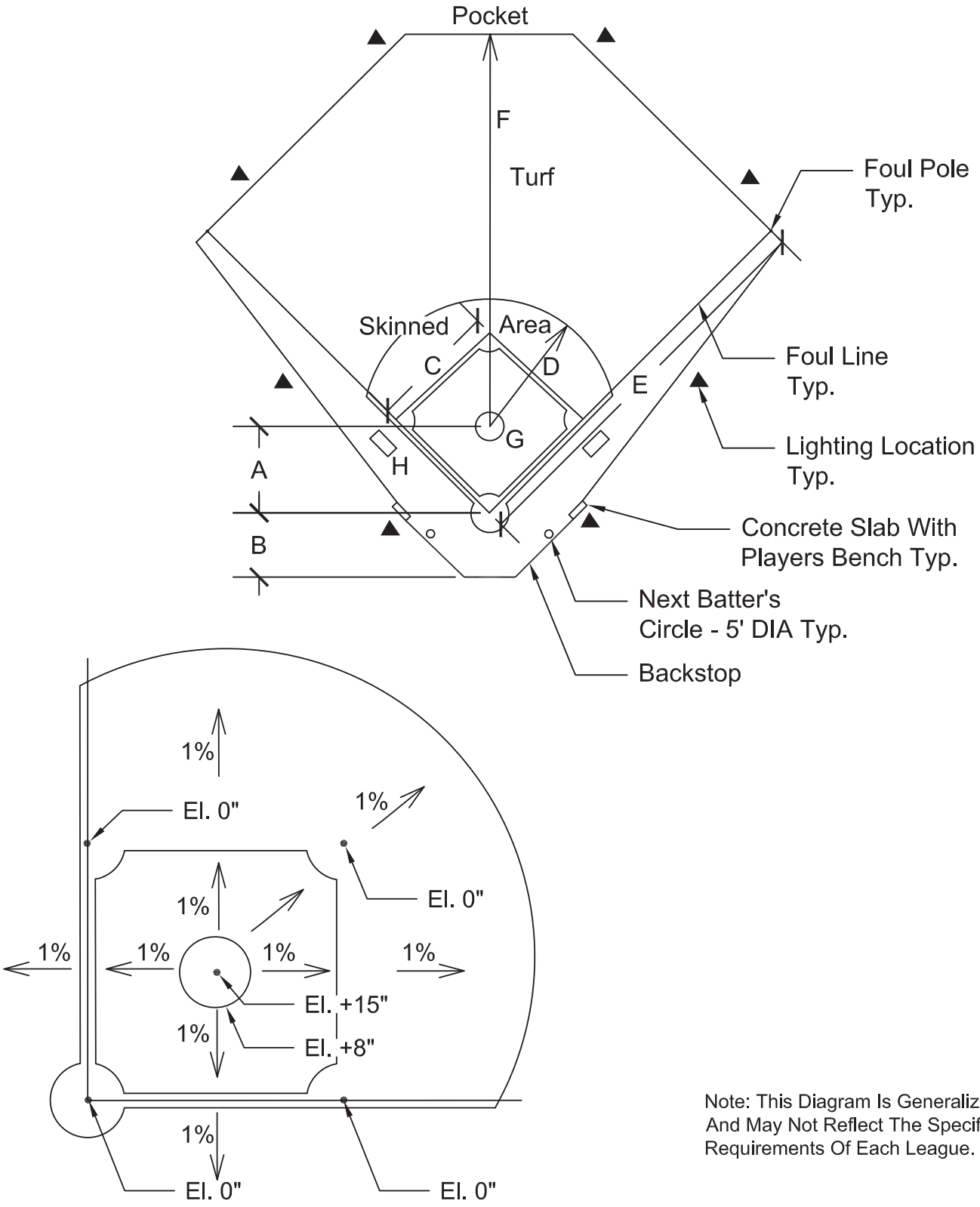

Note: This Diagram Is Generalized And May Not Reflect The Specific Requirements Of Each League.

TYPE ONE BACKSTOP DESIGN

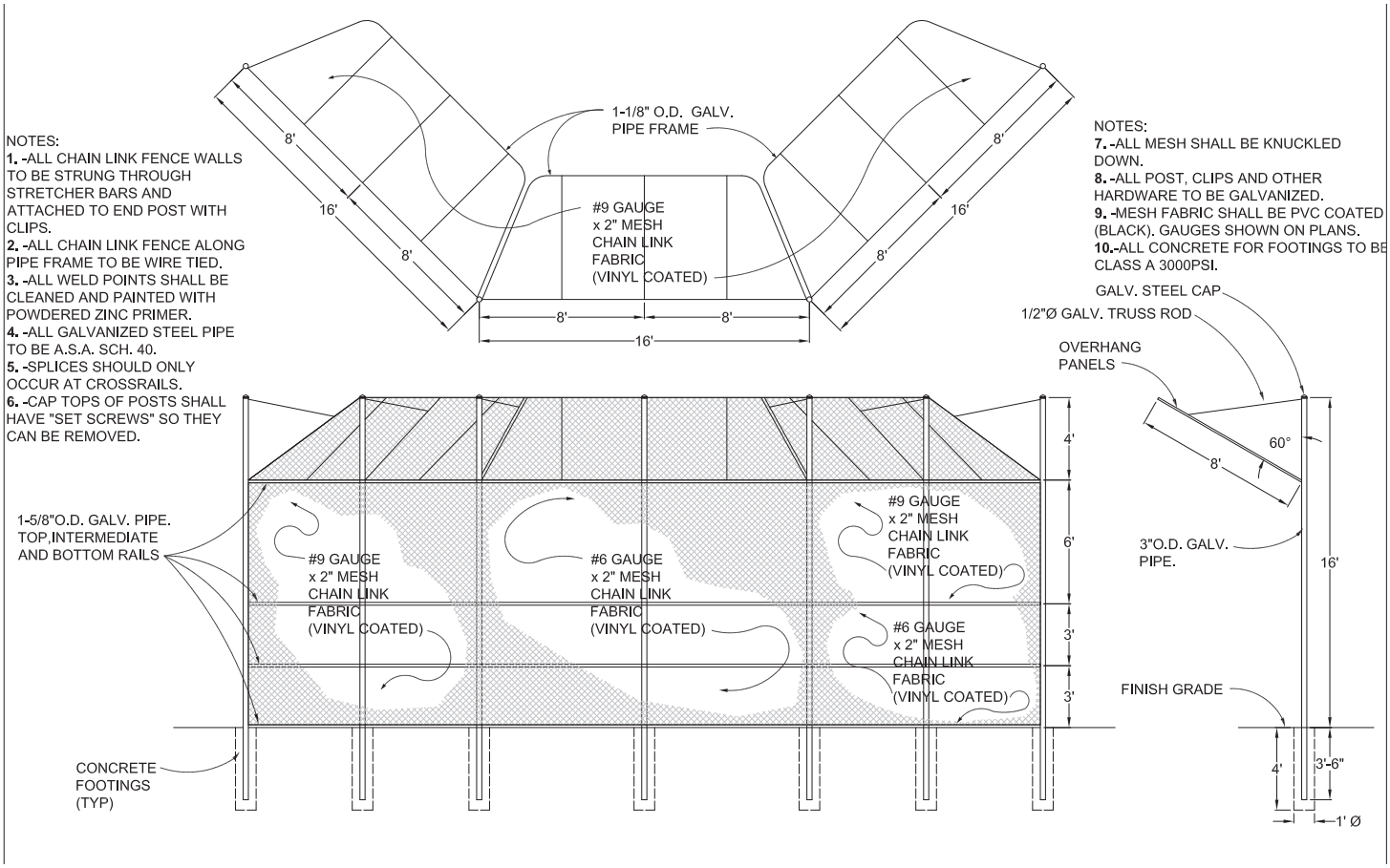

TYPE TWO BACKSTOP DESIGN

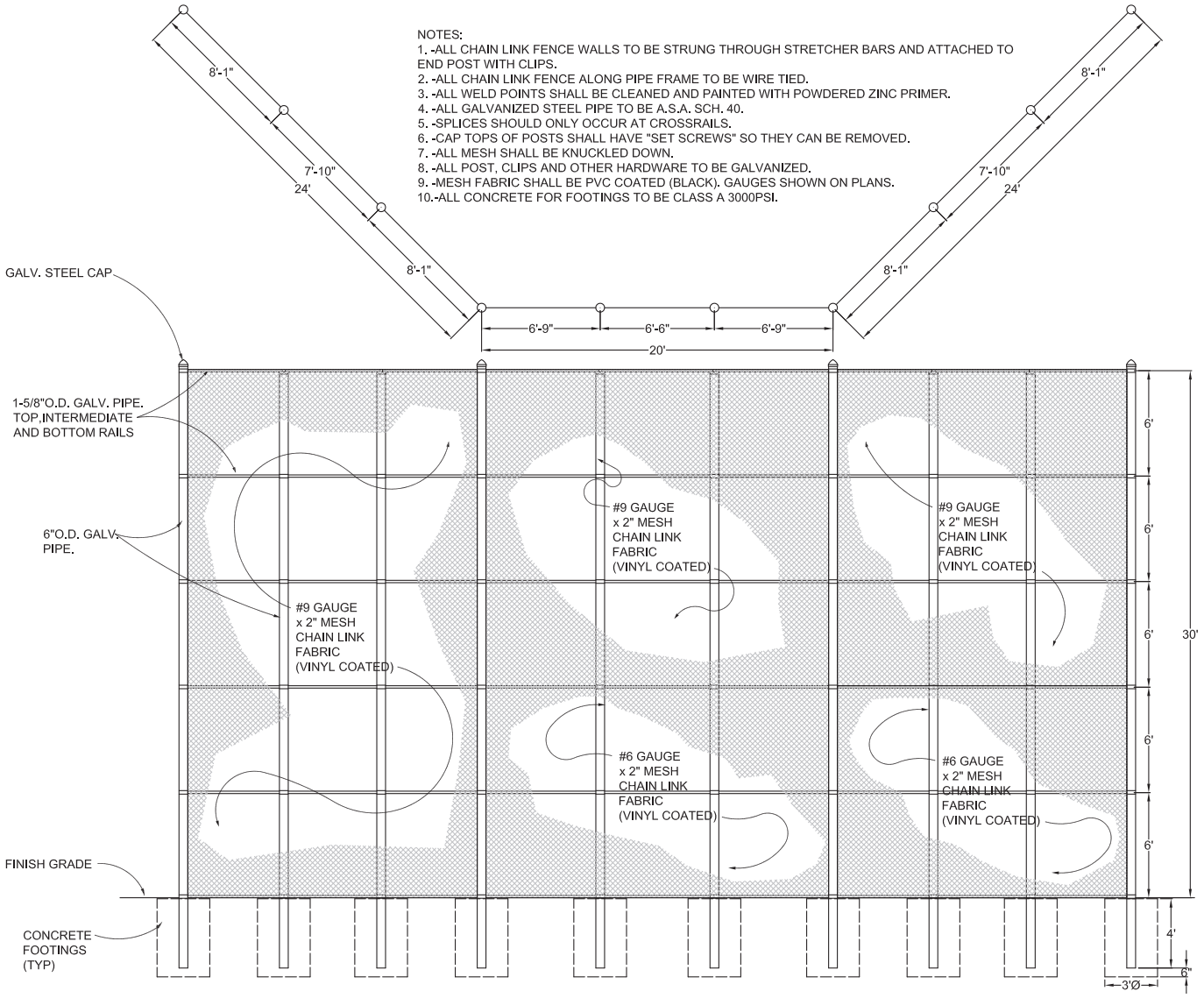



Bleachers, fencing and lights at City View Park

BASEBALL/SOFTBALL FIELD (CONT'D)

Field Dimensions	Softball	Little League Baseball	Pony League Baseball
A. Pitching distance	38′	46′	54′
B. Home plate to backstop	12′ min.	12′ min.	12′ min.
C. Baseline	55′; (50′ women)	60′	80′
D. Radius of skinned area	70′	50′	80′
E. Foul line	250′ (200′ women)	200′	250′
F. Home plate to 'pocket'	250′	250′ (200′ to fence)	300′
G. Diameter - pitcher's mound	16′	10′ (raised 6″)	15′ (raised 8″)
H. Size of coaches' box	3′ x 15′	4′ x 8′	8′ x 16′

BLEACHER DETAILS

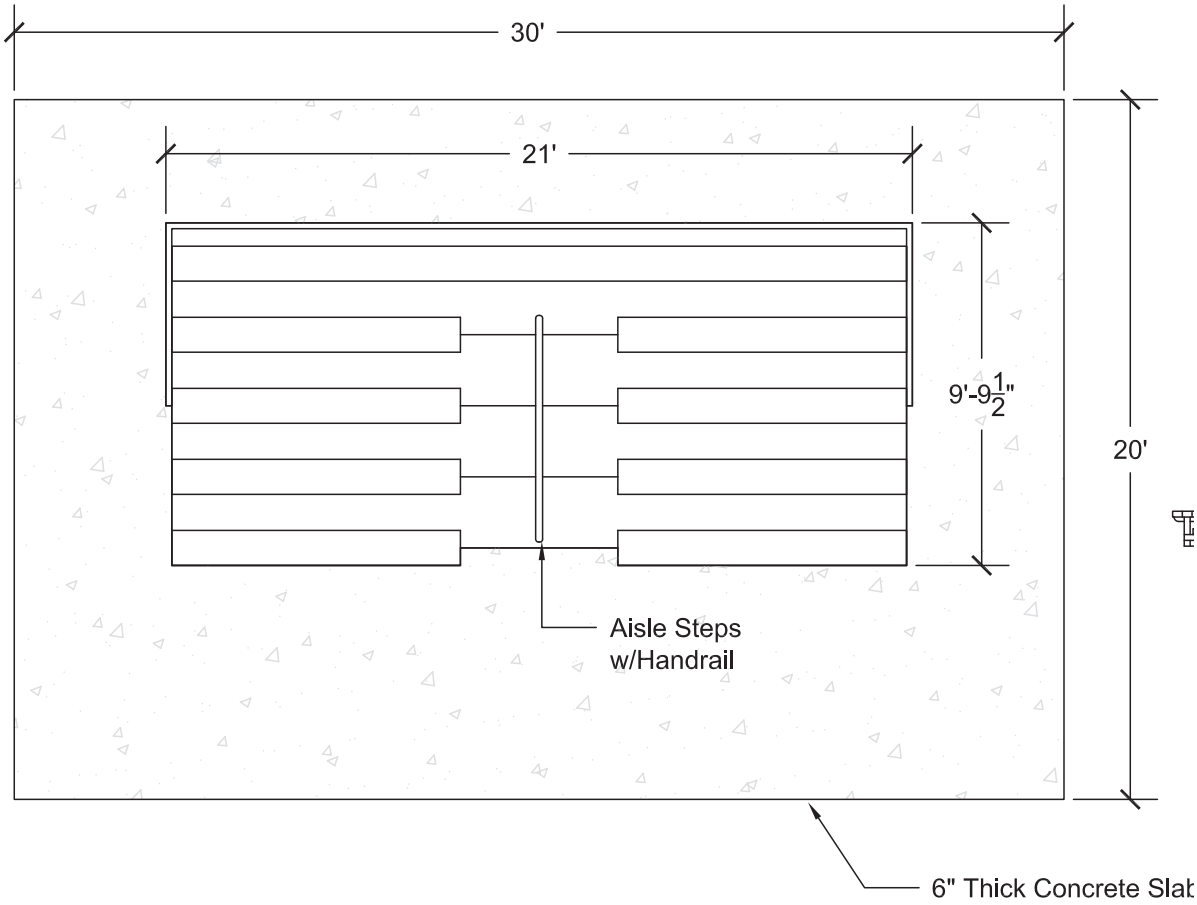

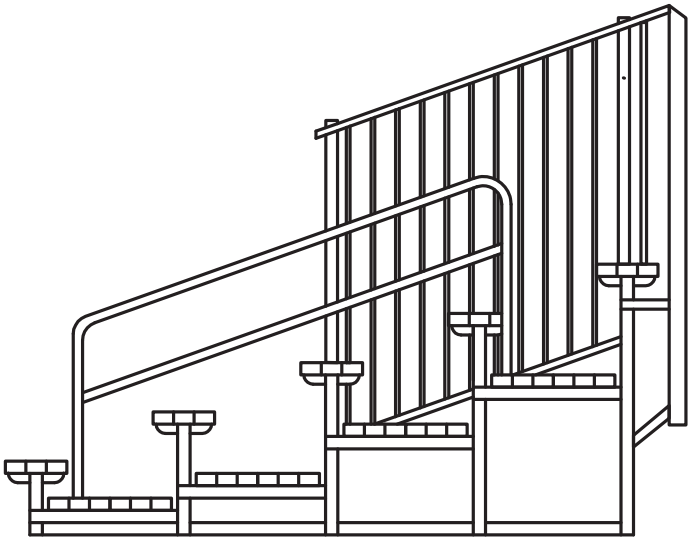

Side Profile View

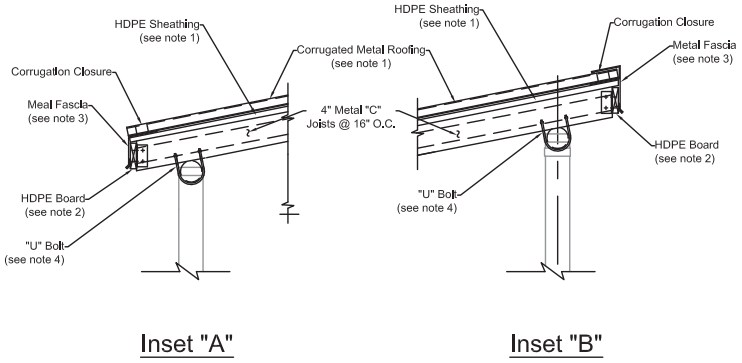

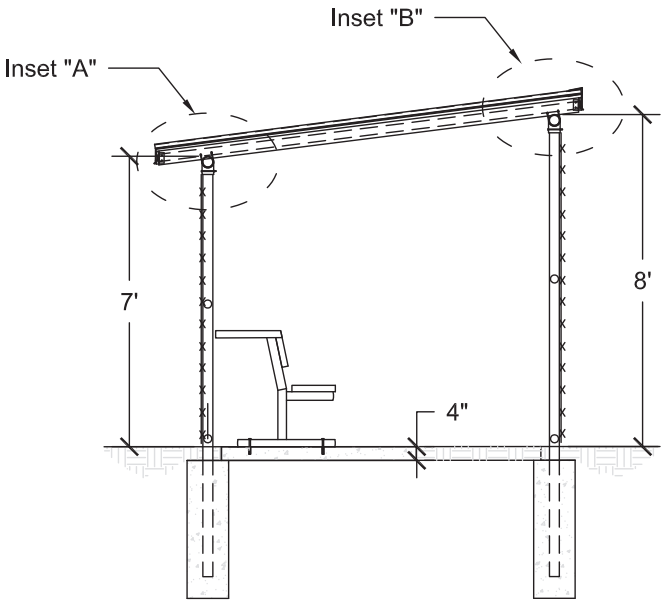

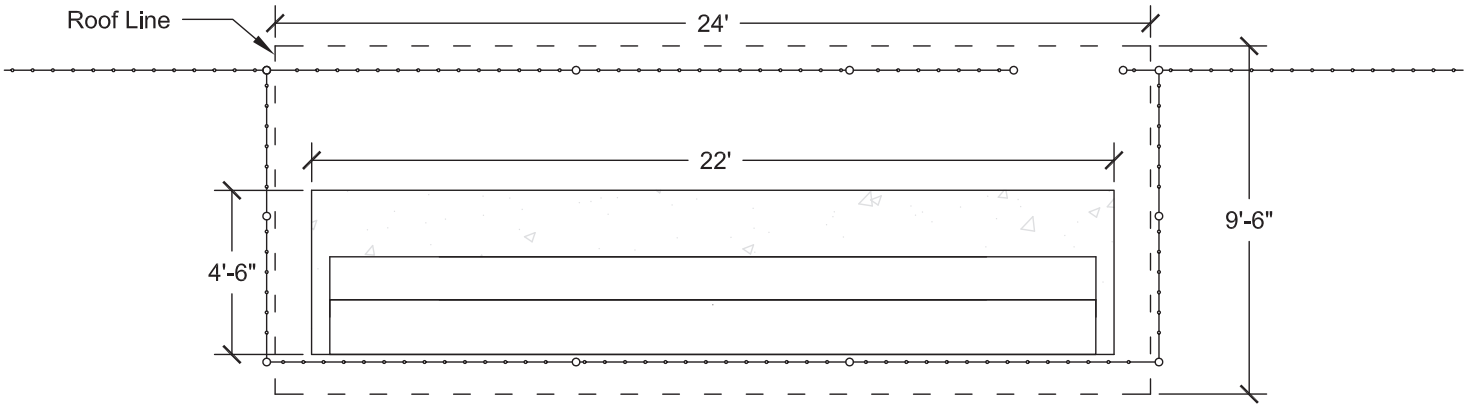



Dugout at Princess Anne Athletic Complex

Dugout Cover

CITY CODE

Dugout structures must be designed for a wind load of 110 mph sustained for 3 seconds. Permits are required.

DUGOUT STYLE (1)

MATERIALS

Frame shall be 4" deep "C" joist (20 gauge galvanized steel) spaced at 16" O.C. Sheathing and sub-fascia shall be 3/4" HDPE. (white) Roofs shall be constructed of 2-1.2"x 1/2" corrugated galvanized metal (20 gauge). The metal roofs and exposed metal fascia's (all sides) shall be powder coated to match façade of site. All hardware shall be galvanized or stainless steel.

CONSTRUCTION

Metal "C" joist to be attached to ball field fence railing by using galvanized "U" bolts. (16" O.C./each joist). Attach 4"x3/4" sub-fascia HDPE boards around perimeter of frame using self-tapping galvanized sheet metal screws and attaching the ends of the "C" joist with 14 gauge 90 degree clip angles. Attach roof sheathing (4'x 8' x3/4" HDPE) to the "C" joist fasten from underneath "C" joist so that only the screw heads are visible). Attach continuous hook strip to perimeter sub-fascia 6" O.C. Attach corrugated metal fascia and roof material using galvanized or stainless steel screws.

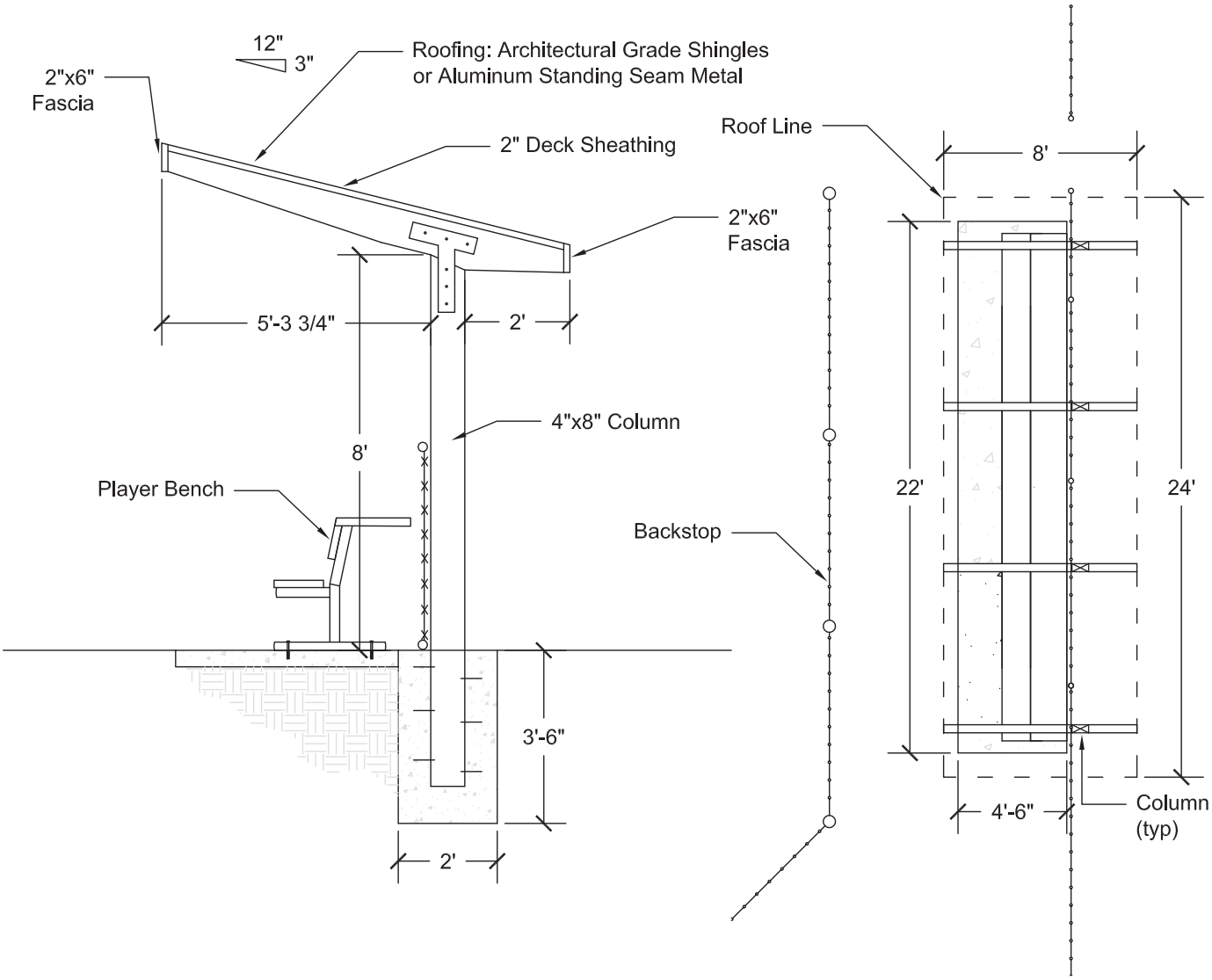

DUGOUT STYLE (2)

MATERIALS	Lumber shall be #1 grade kiln-dried southern yellow pine grade to meet the requirements for Structural Glued Laminated Timber, AITC 117. All lumber to be pressure treated. Columns and beams to be pressure treated embedded glue laminated wood. Roof decking to be pressure treated, two (2) inch nominal #1 grade, end matched, single tongue and groove with V-joint bottom face. Fascia to be pressure treated 2" x 6" x 1-1/2" southern yellow pine #1 SPIB grade. Roofing to be either class "A" fire rated 25 year architectural shingle (dark gray) over 15 lb. felt paper or Aluminum standing seam metal (gray powder coated) over 15 lb. felt paper. All hardware to be hot dipped galvanized.
CONSTRUCTION	This is a pre-fabricated structure. Follow the manufacturer's assembly instruction.
BLEACHERS	5 row 21' long aluminum with picket railing and ADA compliant center stair system.
BLEACHER CONCRETE SLAB	Bleachers shall be anchored to a 20' x 30' x 6" thick 3000psi fiber reinforced concrete slab with a light broom finish





(Top left photo): Lacrosse players compete on fields outside of the Virginia Beach Sportsplex

(Top right photo): Blue skies over the green turf at the USA Field Hockey Training Center

MULTIPURPOSE FIELDS

	Description	Soil Specification	Irrigated/ Lighted	Minimum Parking
Tier 1	Tournament Plan	Sandy Loam	*Yes	60
Tier 2	Informal Field	Native Top Soil	No	60

** The installation of field lighting is desired but will vary from field to field depending on the surrounding land uses.*

ORIENTATION Long axis north to south

GRADING Long central axis shall serve as high point with 1% slope draining to each side.

DIMENSIONS 160-feet wide x 360-feet long including two 10 yard end zones. There are no official dimensions for soccer.

SAFETY BUFFER 15-foot minimum of clearance from end lines and sidelines to vertical fixed objects.

SOIL SPECIFICATIONS Field specifications are broken out into two tiers based on intended use.

GOALS Portable combination goals are for use on multipurpose fields as needed. Combination goal must have removable football posts. In-ground single use goals are also options for these fields.

FABRICATION These goals are manufactured by city staff in park maintenance. The cross member with attached uprights is bolted to the standard aluminum soccer goal frames.

MATERIALS Aluminum pipe

INSTALLATION Install per park maintenance staff guidelines.

MULTIPURPOSE / FOOTBALL / SOCCER FIELDS

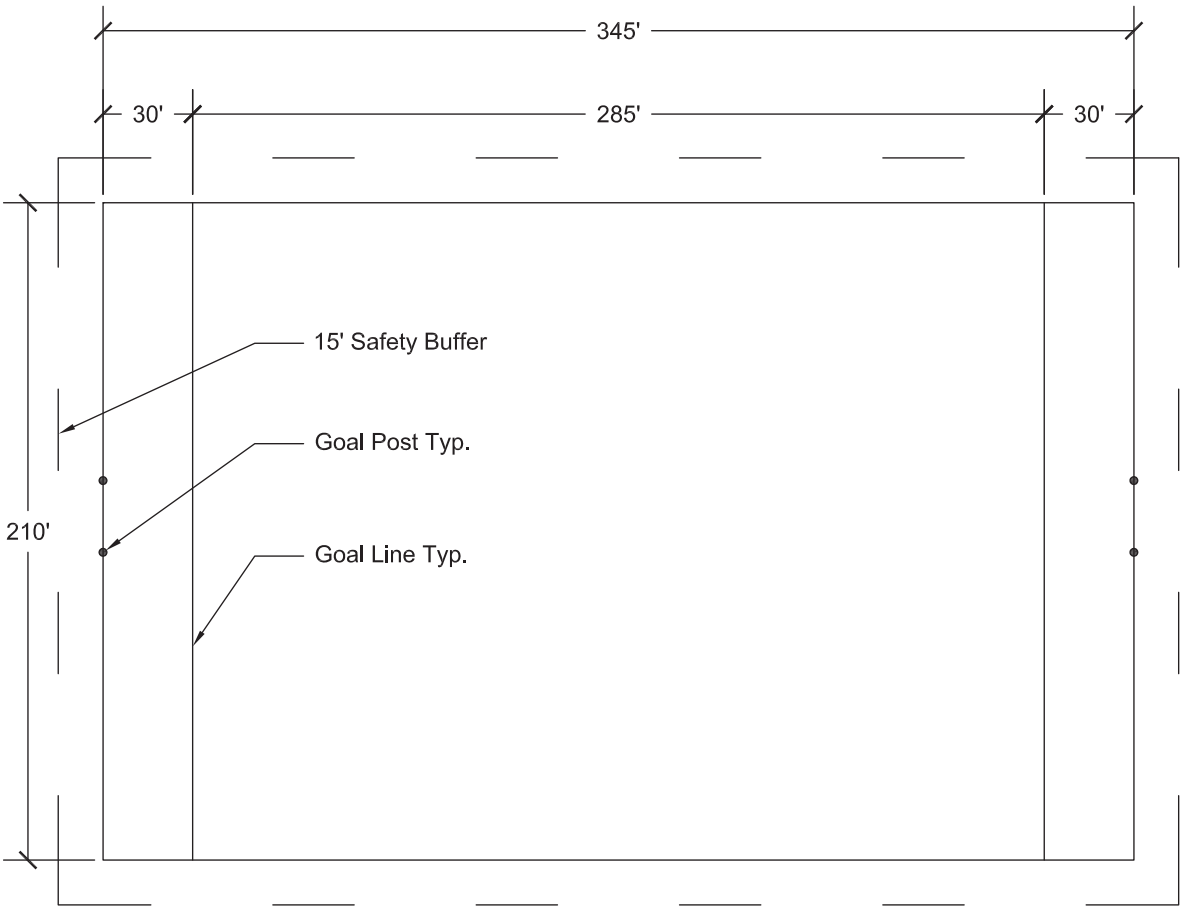

COMBO/PORTABLE GOAL

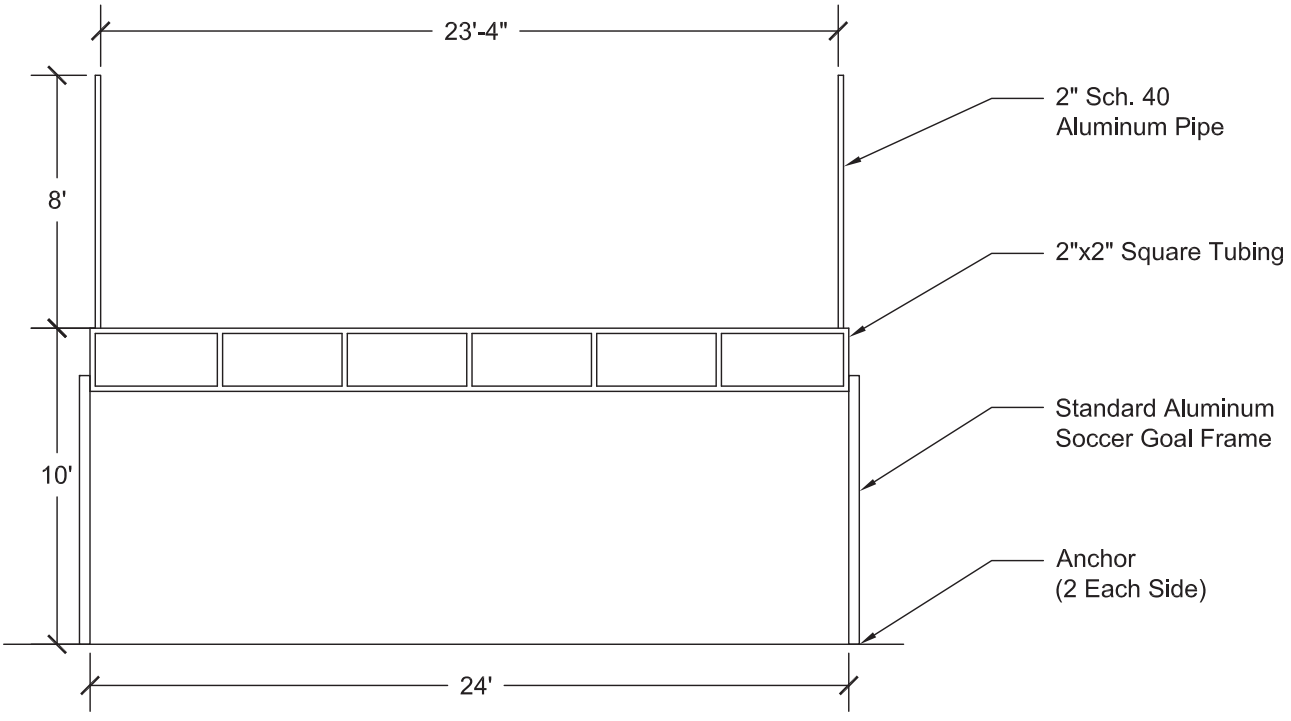

SOCCER GOAL

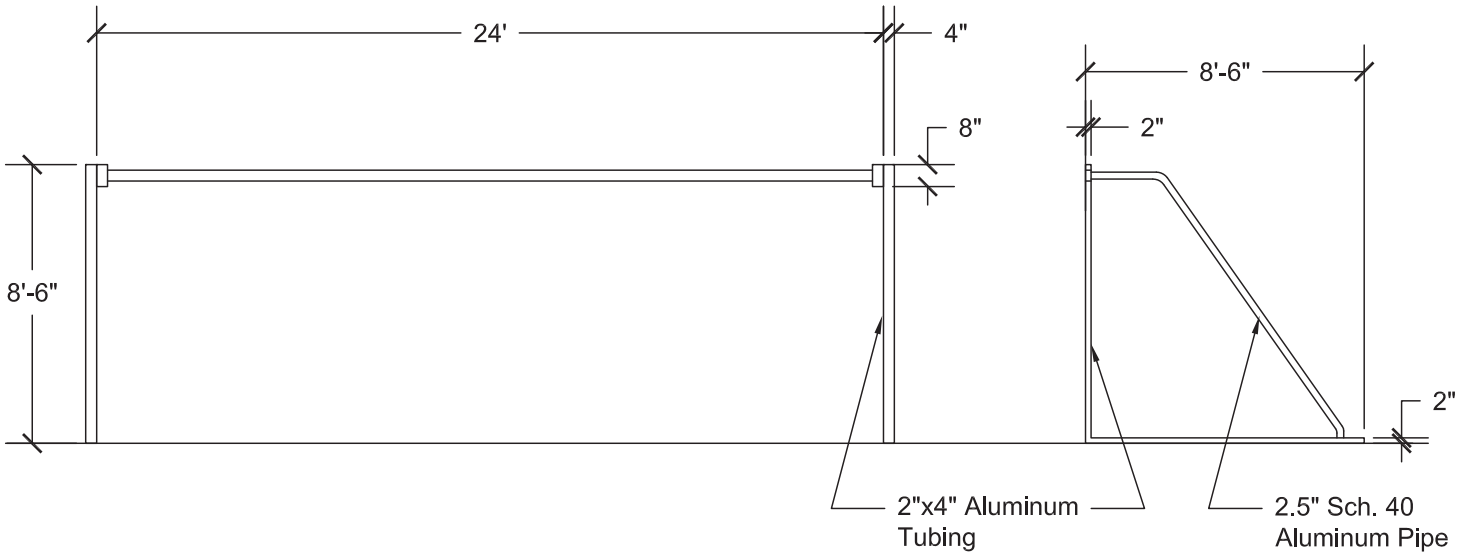

FOOTBALL GOAL

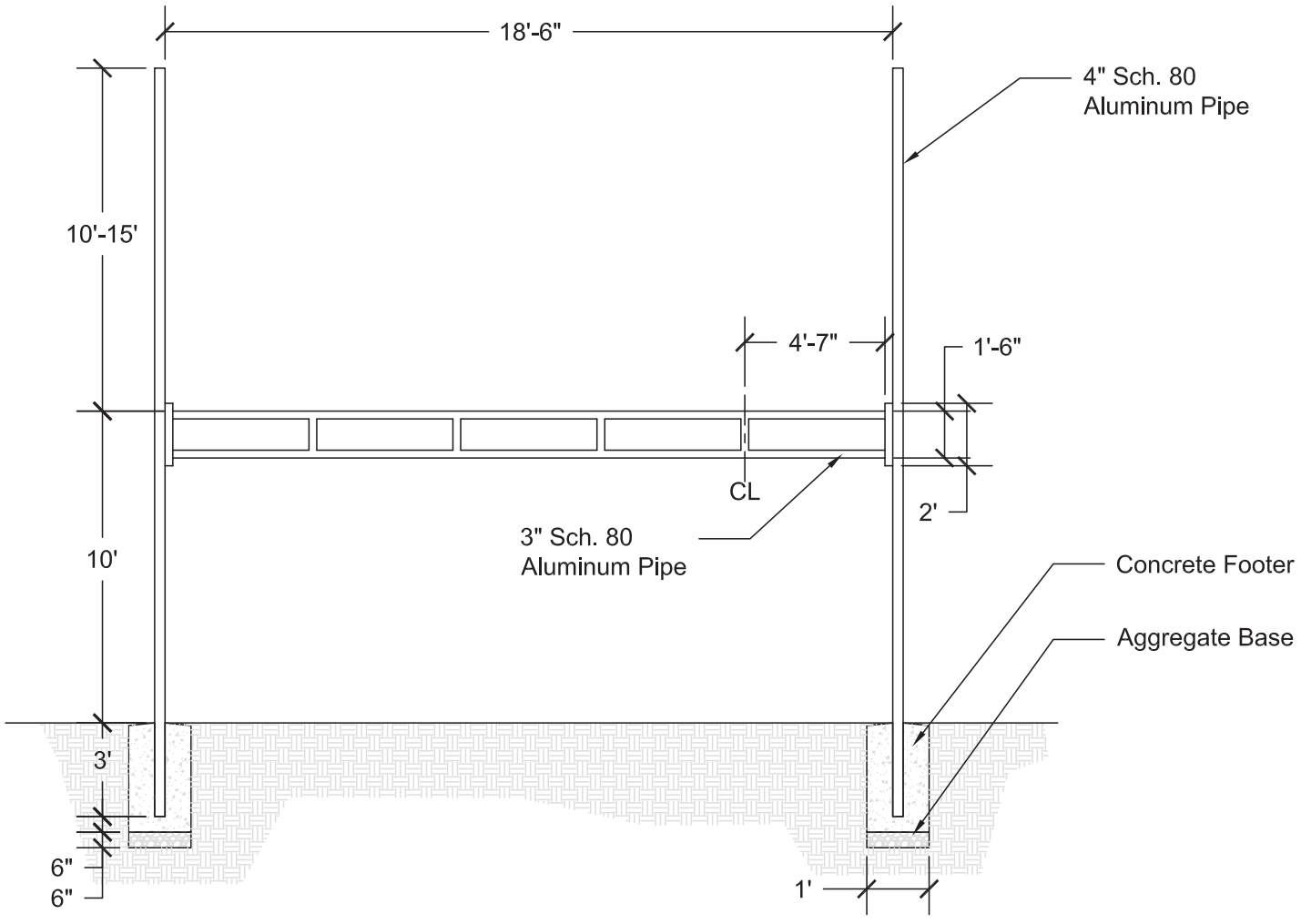

SECTION SEVEN

Play Courts



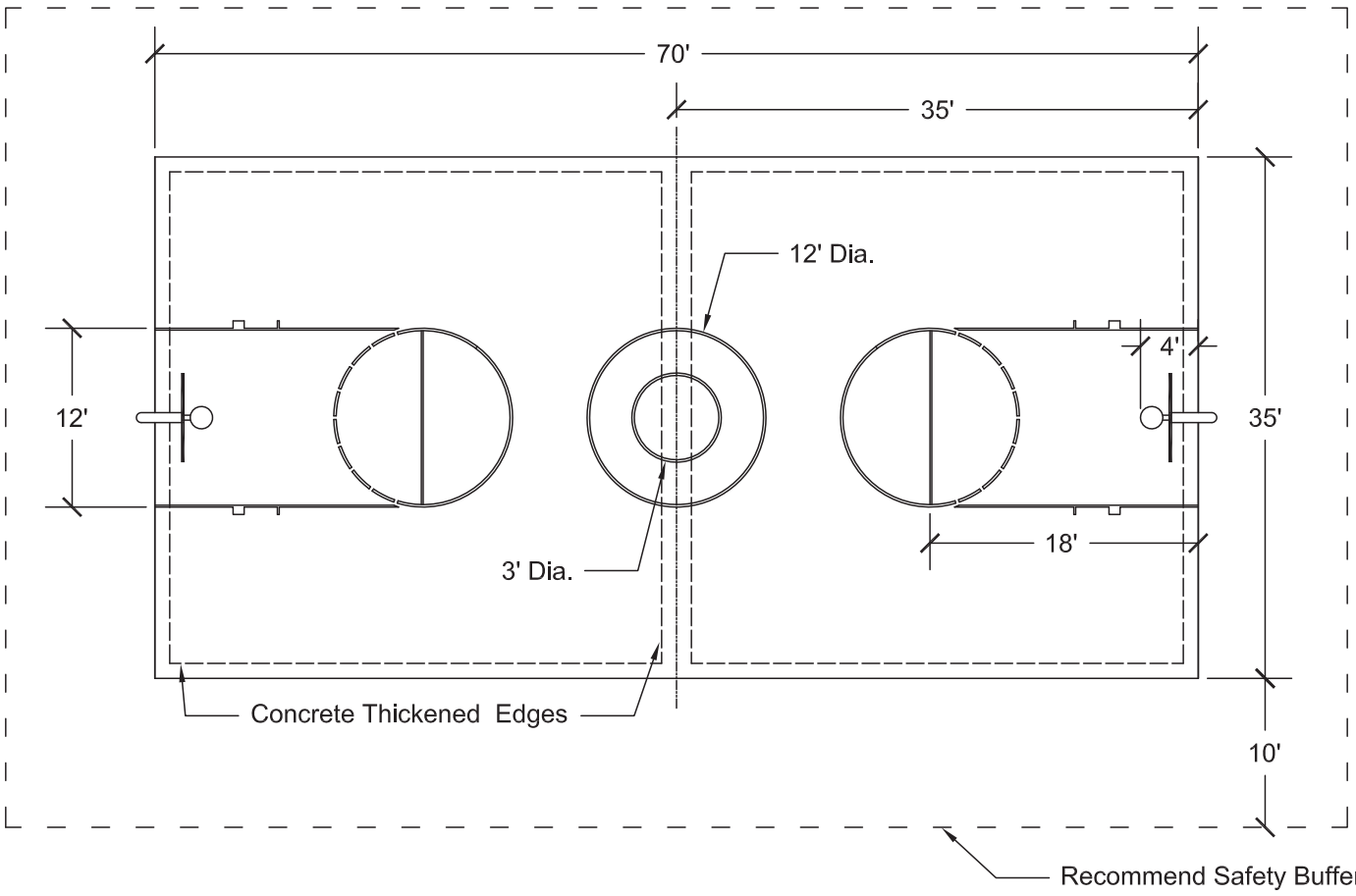



Typical basketball court at Blackwater Park

BASKETBALL COURT

ORIENTATION	Long axis is north to south
DRAINAGE	Drain end to end
DIMENSION OPTIONS	Full court 35' x 70'; half court 35' x 35'
COURT	Concrete slab with fiber reinforcement with 2-inch wide white markings
SAFETY BUFFER	10-feet, or a minimum of 8-feet, unobstructed behind the back boundary line and a minimum of 6-feet on each sideline
PAVEMENT AREA	Allow a minimum of 3' additional from sideline to edge of pavement
GOAL POST	In-ground pole, 3 1/2" O.D. min, with a galvanized finish
BACKBOARD	One-piece cast aluminum alloy backboard with 1" deep supporting flanges
NET	White nylon

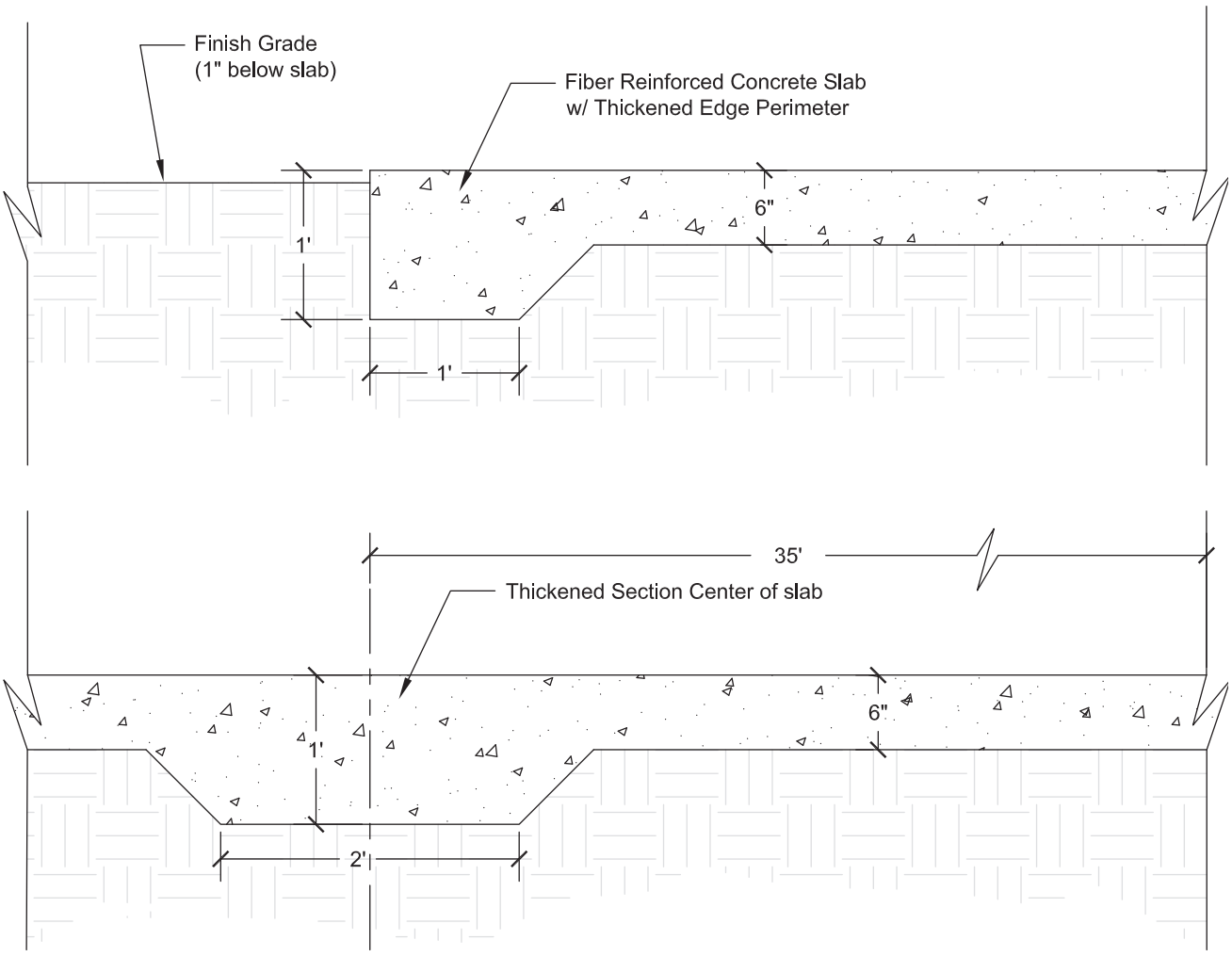

BASKETBALL COURTS EXAMPLES AT CITY VIEW PARK & BLACKWATER PARK





Note: All Dimensions Are To The Outside Edge Of Lines. All Playing Lines Are 2" In Width, Except The Base Line Which May Be Between 2" And 4" In Width.

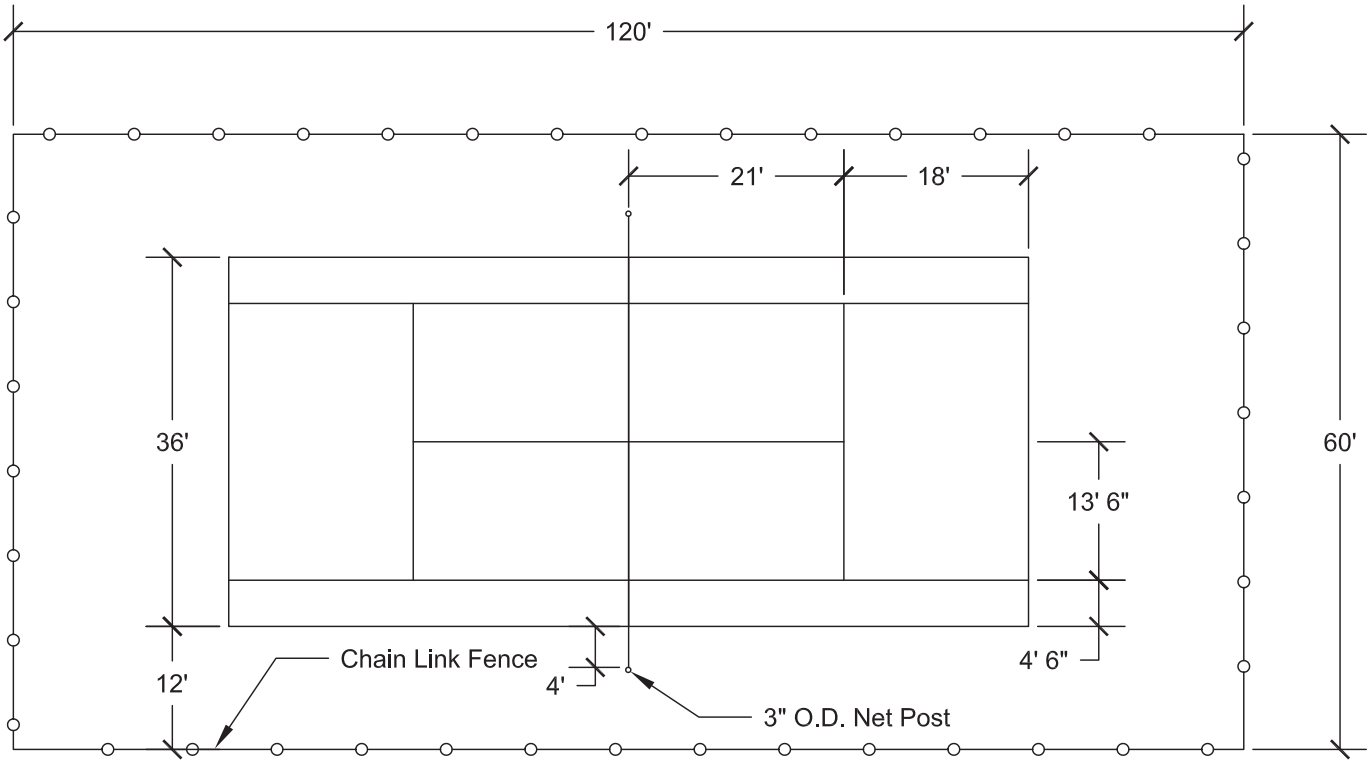



Typical horseshoe pit at Munden Point Park

HORSESHOE PIT

LOCATION	Staffed parks
COURT CONSTRUCTION	Consists of the pit, pit box, and backboard
ORIENTATION	Long axis north to south
PIT	The pit area shall be filled to a depth of 4 to 8 inches with either clay, sand, or soil.
SAFETY DISTANCE	Space courts at least 12-feet apart measured stake to stake.
STAKES	Each stake shall be centered between the platforms with a minimum of 21-inches from the stake to the front and back of the pit. Stakes shall be 1-inch in diameter and shall extend between 14" and 15" above pit level. They shall have an approximate 3" lean toward each other.
BACKSTOPS	Backstops are recommended and shall be 3-feet high and 6-feet wide.

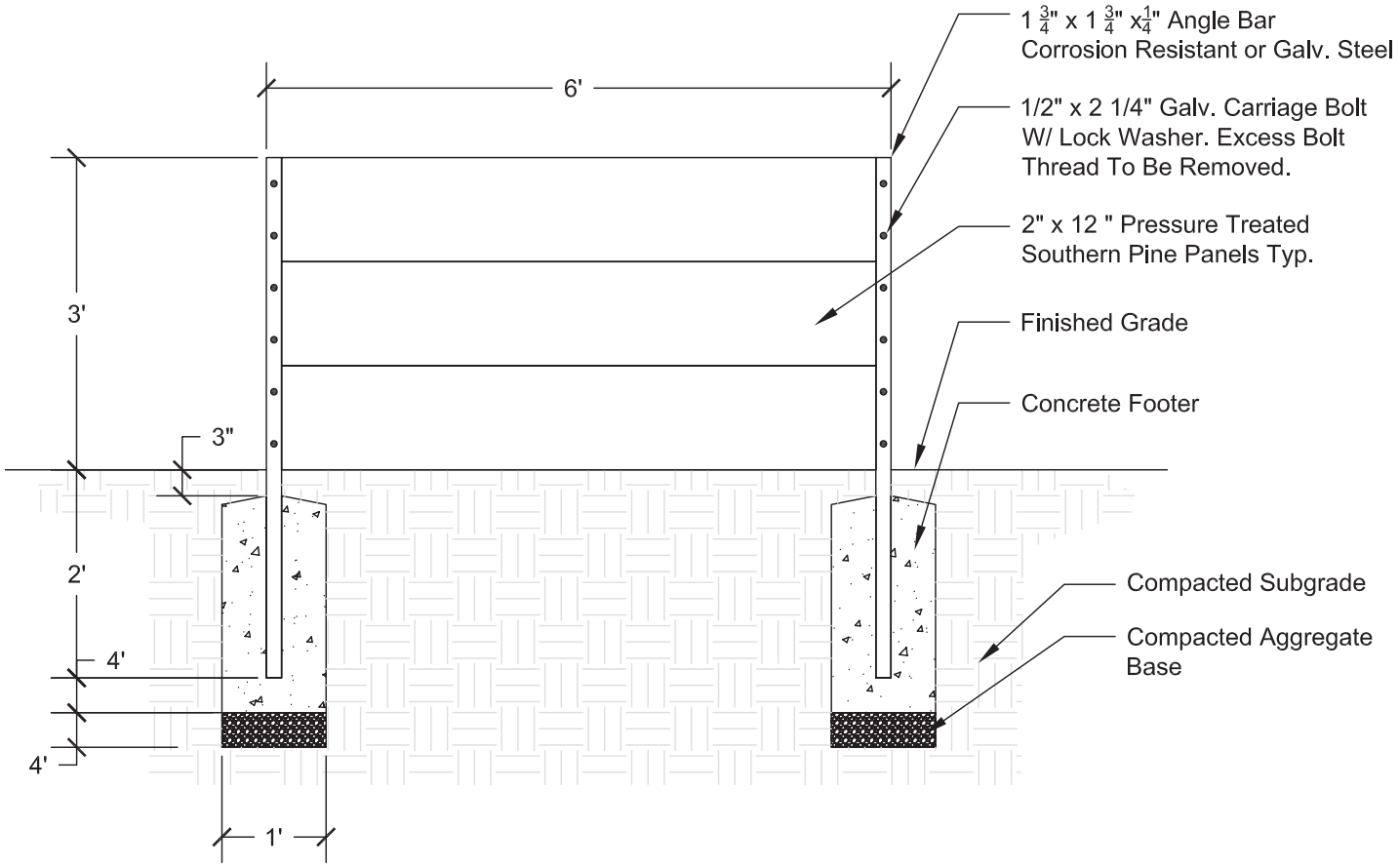
1 ¾" x 1 ¾" x¼" Angle Bar
Corrosion Resistant or Galv. Steel
1/2" x 2 1/4" Galv. Carriage Bolt
W/ Lock Washer. Excess Bolt
Thread To Be Removed.
2" x 12 " Pressure Treated
Southern Pine Panels Typ.
Finished Grade
Concrete Footer
Compacted Subgrade
Compacted Aggregate
Base
6'
3'
3"
2'
4'
4'
1'

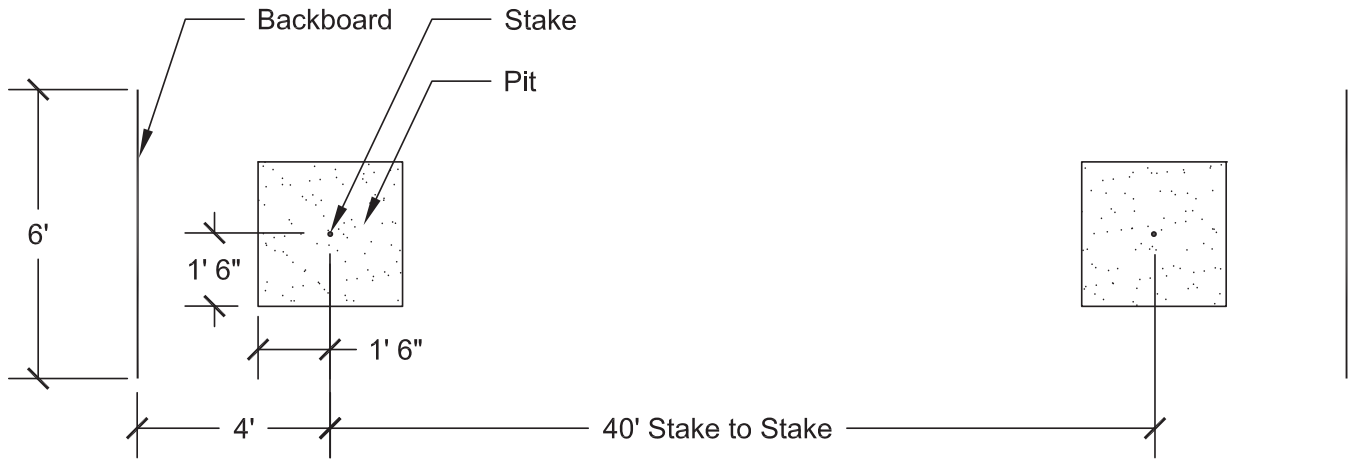
Backboard
Stake
Pit
6'
1' 6"
1' 6"
4'
40' Stake to Stake

Note: All Dimensions Are To The Outside Edge Of Lines. All Playing Lines Are 2" In Width, Except The Base Line Which May Be Between 2" And 4" In Width.

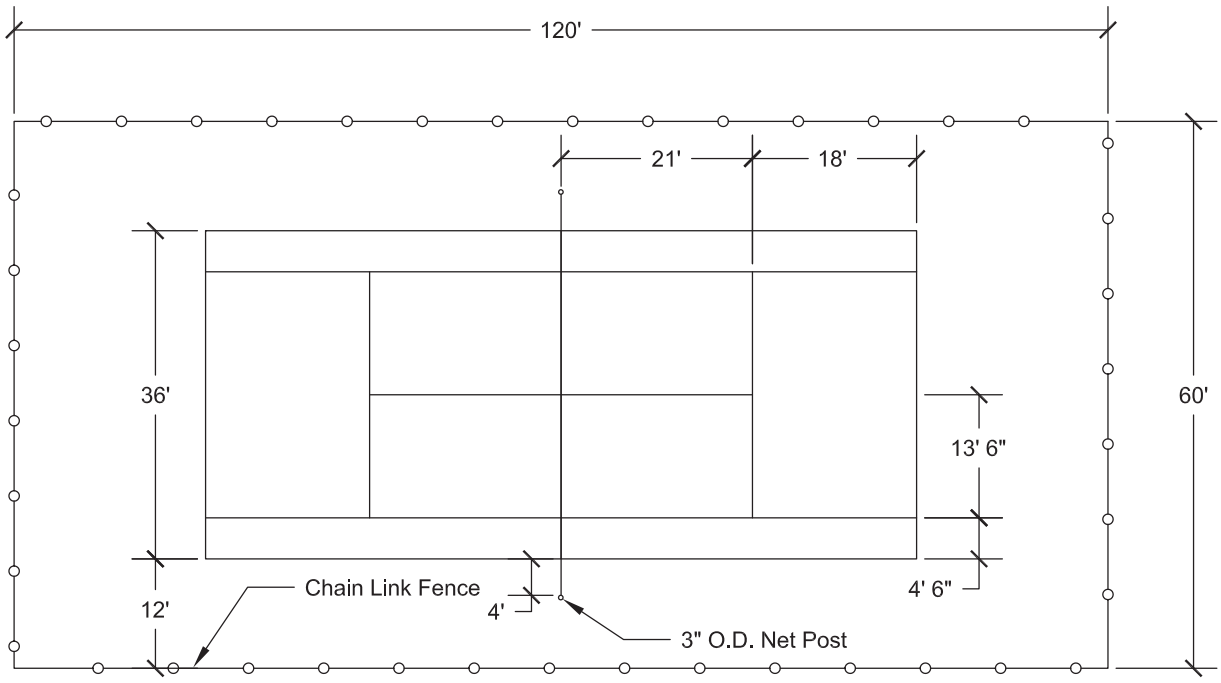



Typical tennis courts at Woodstock Park

TENNIS COURT

ORIENTATION April-October play, long axis is north to south. Year round play, long axis is northwest to southeast 22 degrees off true north.

DRAINAGE Drain side to side (preferred) or end to end at 0.8% to 1%. Never allow a high point at the net.

MULTIPLE COURTS Allow a 10-feet minimum between courts.

SURFACE MATERIAL COLOR Green court area and border area with 2" white stripes for court markings

NET 42' long and 3 1/4' (39") high and otherwise conforming to the regulations of the U.S. Lawn Tennis Association

NET POSTS Black Schedule 40 steel pipe 3" O.D. fitted with rust- proof cast aluminum caps (Do not paint)

LIGHTS If provided, timer for lights shall be located on pole near court entrance.

FENCE 10-feet tall chain link fence, 1 3/4" mesh, 9-gauge core mesh minimum. All fence posts and hardware shall be black polyester coating 3-mil color powder electrostatically applied (powder coated finish). Fence mesh shall have a black vinyl coated finish.

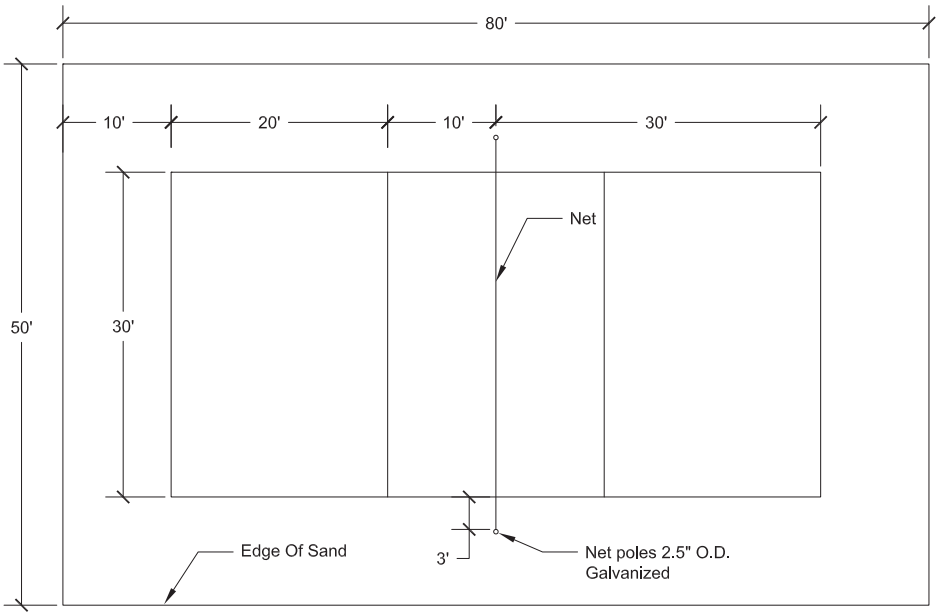

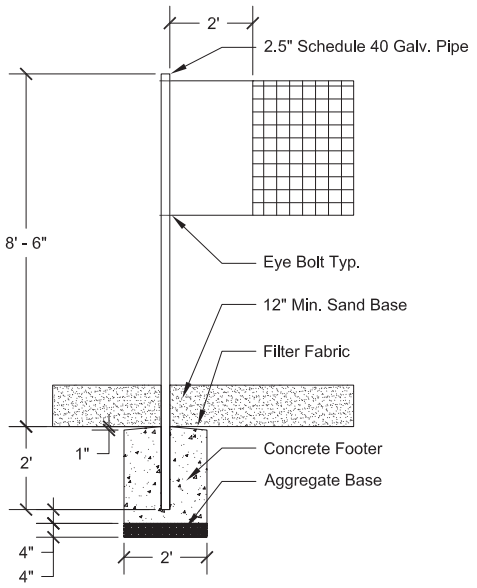

VOLLEYBALL COURT

ORIENTATION	Long axis north to south
NET	Nylon
NET HEIGHT	7′ 4 1/8″ measured at the center of the playing court
NET DIMENSIONS	39″ wide and minimum of 36-feet long
NET POLES	2 1/2″ O.D. schedule 40 galvanized pipe, wooden poles used at beaches. 3/8″ diameter holes drilled at 2″, 14″, and 50″ for eye bolt assembly.
SAFETY DISTANCE	10-feet minimum unobstructed behind the back boundary line and on each sideline or between courts
SAND COURT	A minimum depth of 12″ of sand with a filter fabric placed underneath the sand bed



Typical volleyball courts and net set up at Woodstock Park

SECTION EIGHT

Playground Systems





Full playground system at Lake Lawson/Lake Smith Natural Area

PLAYGROUND

DESCRIPTION

For the purposes of this document, the term "play area" shall refer to any place or space physically defined and specifically and primarily intended for recreational use by children, generally between the ages of 2 and 12.

For these areas, the Virginia Beach Parks & Recreation department adheres to the standards of several nationally recognized organizations where the design, construction, and maintenance of play areas are involved. The following documents are hereby incorporated as part of these Standards:

1. American Society for Testing and Materials (ASTM) "Standard Consumer Safety Performance Specification for Playground Equipment for Public Use," F1487 (most recent edition)
2. U.S. Consumer Product Safety Commission (CPSC) "Handbook for Public Playground Safety," Publication No. 235 (or most recent edition)
3. U.S. Architectural and Transportation Barriers Compliance Board, Americans with Disabilities Act (ADA), Accessibility Guidelines for Buildings and Facilities; Play Areas; October 2000, amended November 2000 (or most recent edition)

COLOR

Colors shall be determined based on the park's overall character and community aesthetics.

BOUNDARY DEFINITION/SURFACING/DRAINAGE

BOUNDARY MATERIAL Pressure treated timber, plastic timber border, concrete or asphalt edging.

FASTENERS All fastener hardware will be hot dipped galvanized fasteners.

SURFACING MATERIAL Engineered wood fiber carpet chips

UNCOMPRESSED DEPTH Recommended depth depends on fall heights. For general use, an 8" uncompressed depth is standard. Where equipment is being installed with fall heights in excess of 6 feet, contact the surfacing material manufacturer for recommended depths.

DRAINAGE Each playground site demands that the inner area of the playground shall have 4" of material excavated and graded, maintaining a 1.5 % slope toward a newly installed dry well. A layer of filter fabric shall then cover the space enclosed by the timbers. A 4" layer of #57 stone shall then cover the area enclosed by the border material and then another layer of filter fabric will be installed over the entire enclosed playground area prior to installing the wood fiber mulch.

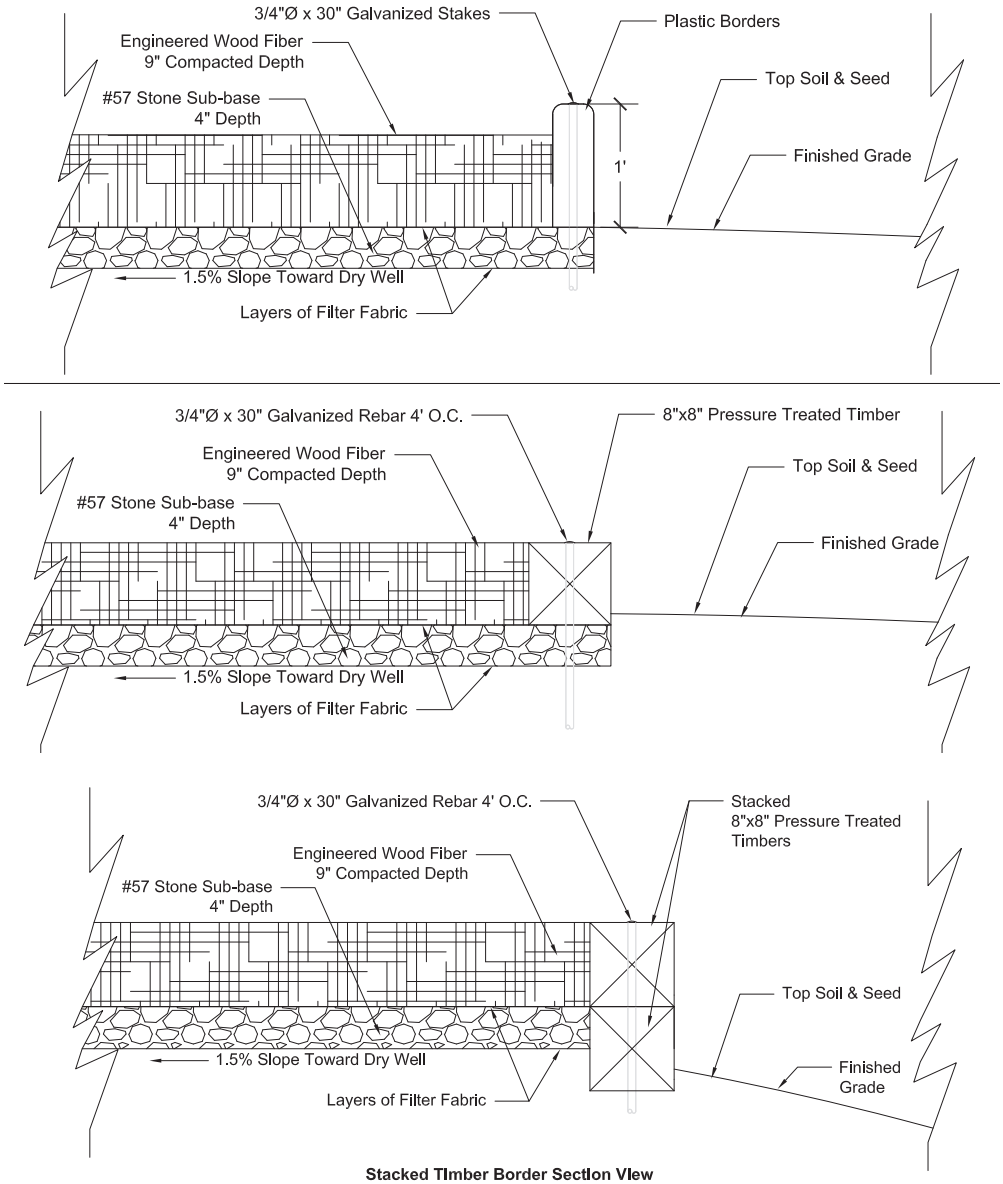

Stacked Timber Border Section View

TIMBER AND PLASTIC BORDER ENTRANCE SECTIONS

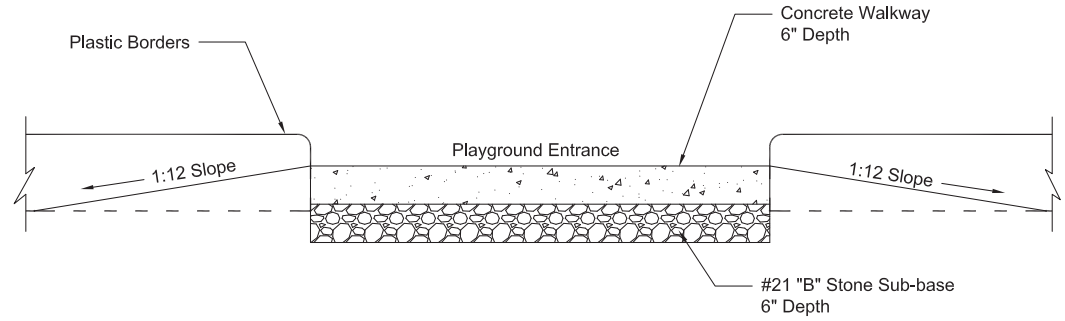

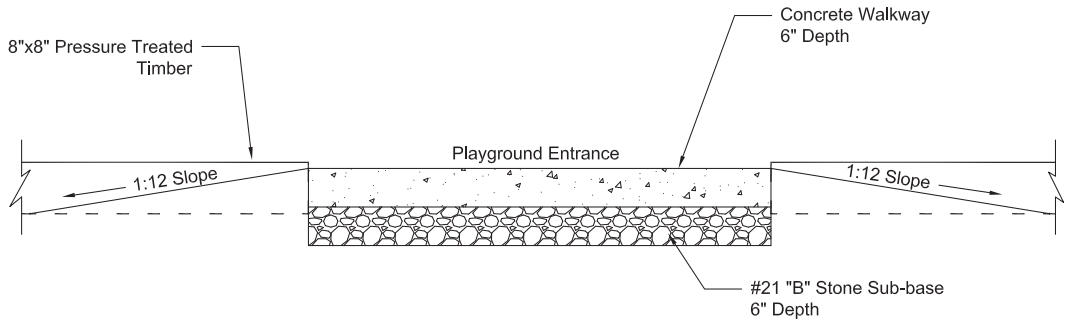

TIMBER AND PLASTIC BORDER ENTRANCE TRANSITIONS

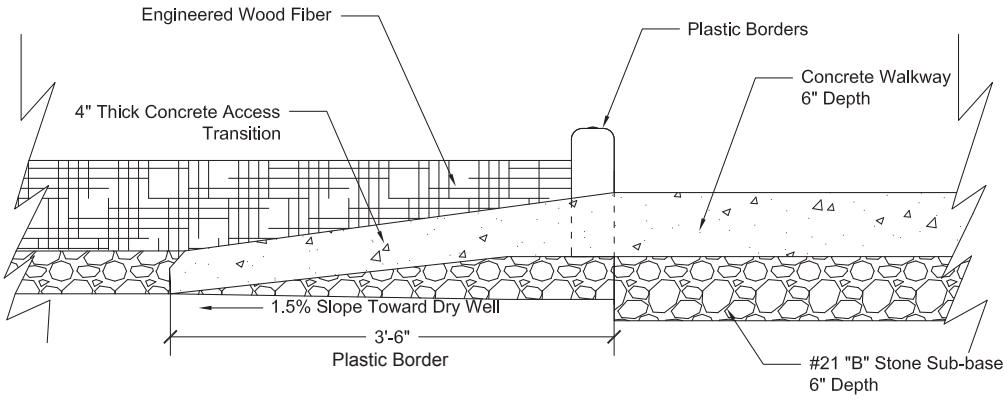

TIMBER BORDER

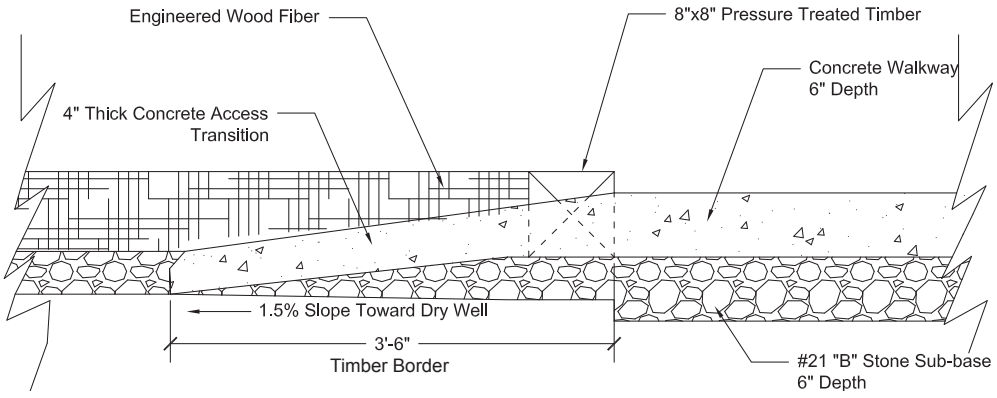

PLAYGROUND POUR-N-PLACE SURFACING DETAILS

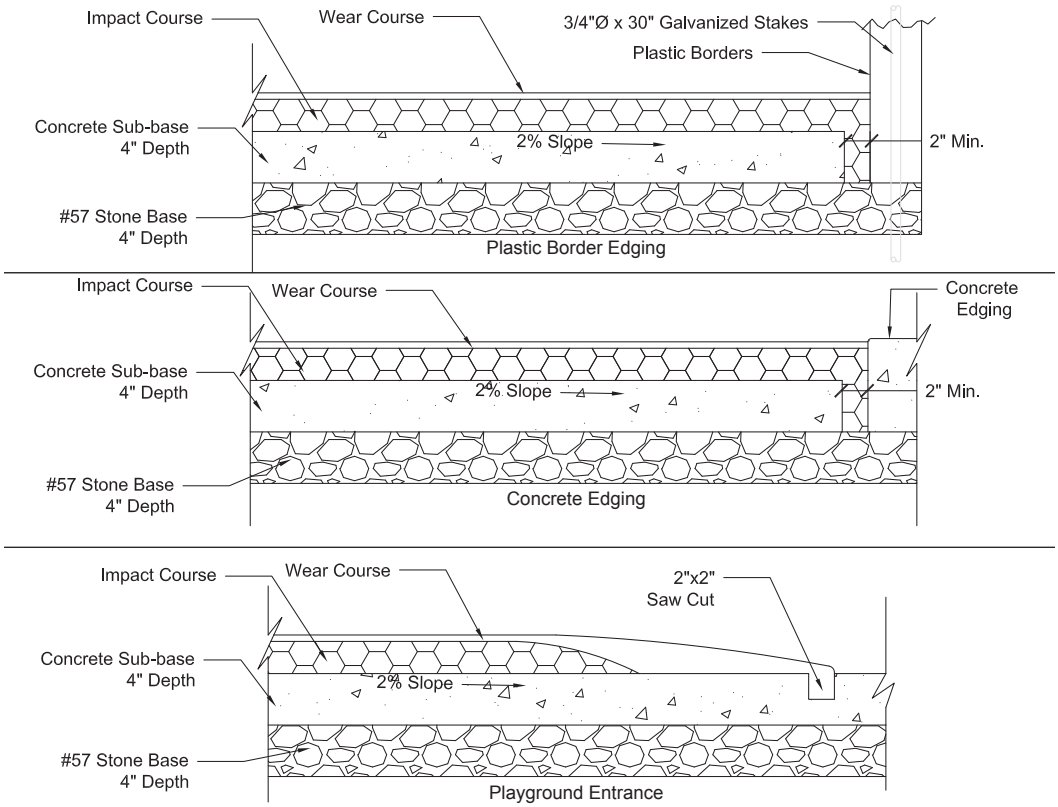

DRY WELL DETAIL

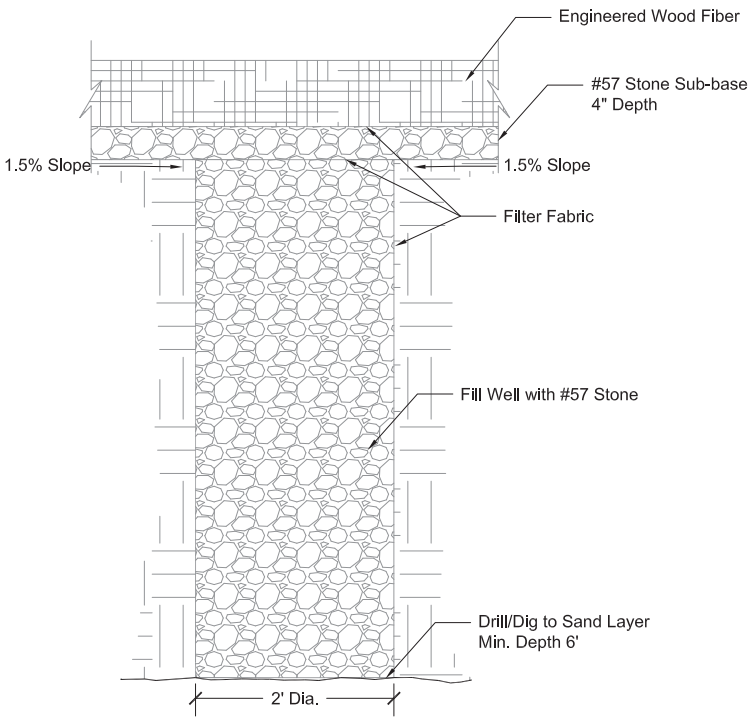

SECTION NINE

Park Walkways & Trails



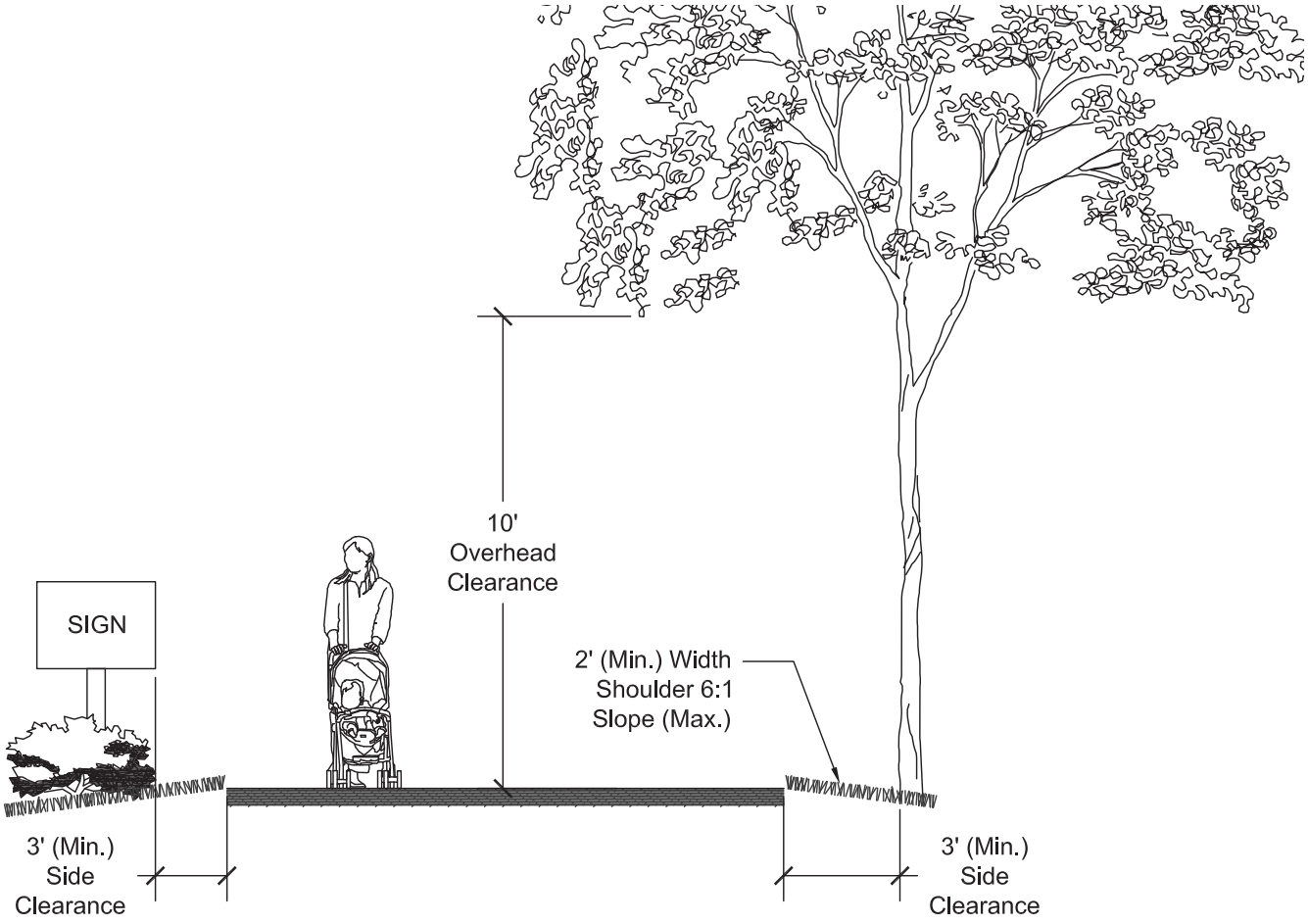



Shared use path along
Cape Story Trail

PARK WALKWAYS & TRAILS

DESCRIPTION

This section establishes standards for public walkways, trails, and internal pedestrian circulation systems that will provide user-friendly pedestrian access.

WIDTH

Primary walkways - 12'; secondary walkways - 8'. In certain circumstances the use of 6' wide paths may be appropriate for minor connections.

CONNECTIVITY

Continuous internal pedestrian walkways shall be provided from the public walkway or right-of-way to the main entrance of all buildings and active amenity areas on the site. Walkways shall connect pedestrian activity such as, but not limited to, transit stops, street crossings, buildings, and major site amenities.

ADA

All pedestrian facilities shall meet ADA guidelines.

OTHER

For additional information related to the development of safe trail facilities, refer to the third or most recent edition of the American Association of State Highway and Transportation Officials (AASHTO) Guide for the Development of Bicycle Facilities.

ASPHALT PATH

USE ADA accessible pedestrian walkways, trails, and light vehicular service access

BASE The aggregate base shall extend beyond the pavement edge so that the edge will be structurally reinforced and shall be a minimum depth of 4"



Asphalt trail at Marshview Park

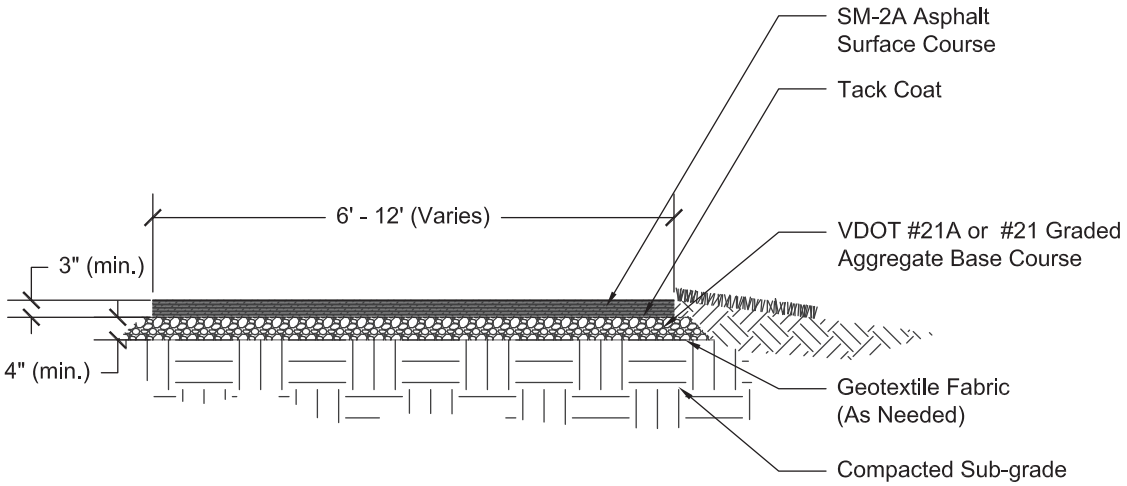

CONCRETE SIDEWALK

USE ADA accessible pedestrian walkways, trails, and light vehicular service access concrete walk ways shall be Class A 3000 PSI fiber-reinforced.



Concrete path at Woodstock Park

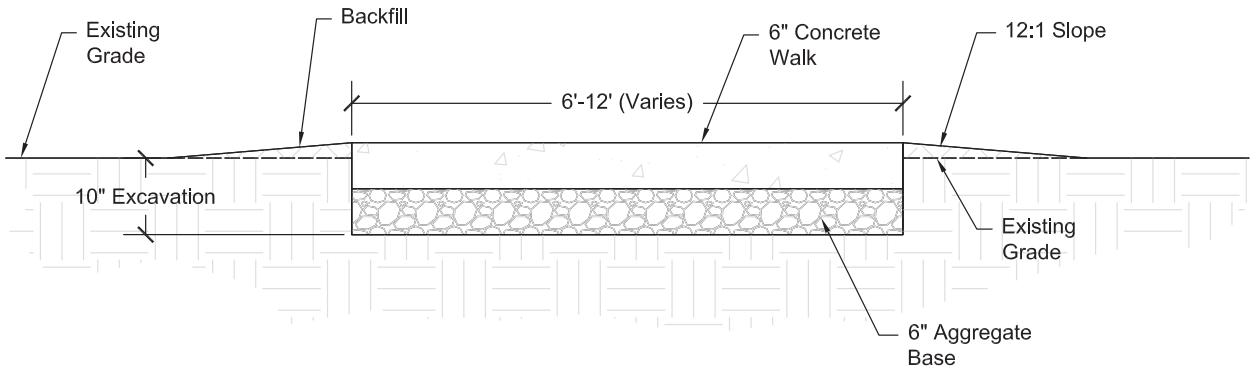





Crushed stone trails appear in the Japanese Gardenat Red Wing Park

CRUSHED STONE TRAIL

USE

Only for use in environmentally sensitive and natural areas where pedestrian access is desired

WIDTH

Walkways - 8'. In certain circumstances, the use of 6' wide paths may be appropriate for minor connections. Areas where horses will be utilizing the trail, 4-foot wide shoulder is recommended.

CONSTRUCTION

All trail construction shall include standard clearing limits as follows: brush and branches shall be removed to a height of 10 feet within 3 feet of the trail. Remove all roots and organic debris to a depth of 4 inches, where appropriate. See modified detail on the following page for applications where fewer disturbances are desired. Establish a design cross-slope in sub-grade materials. Provide complete mechanical compaction. Where this is impractical or impossible, compact by hand with an appropriately weighted implement.

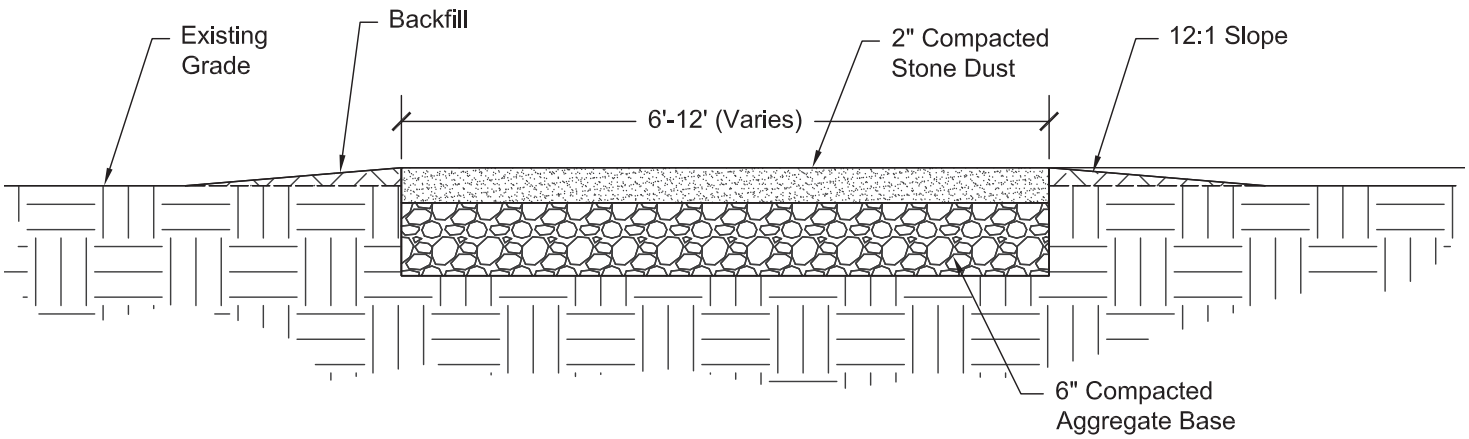

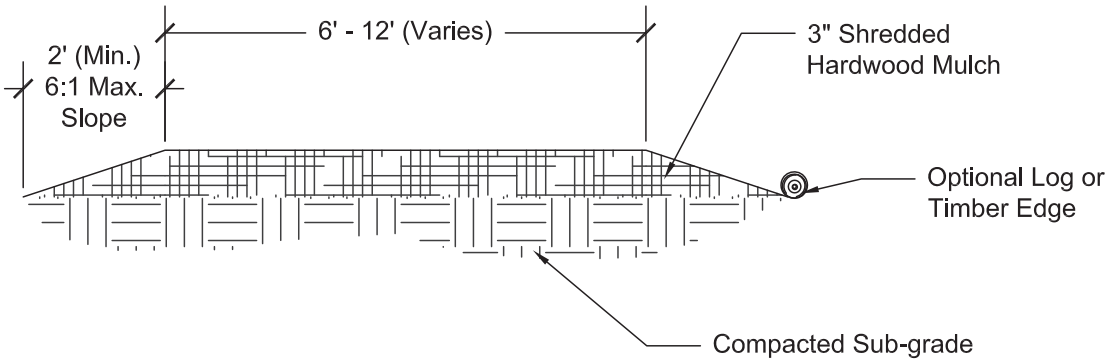

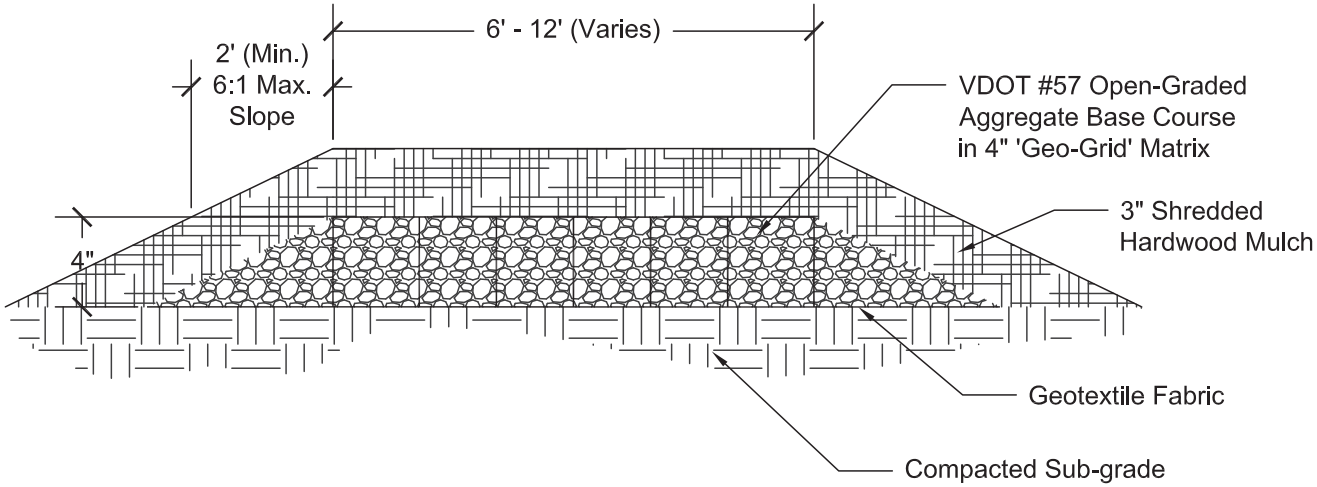

NATURAL TRAIL

USE

For use in environmentally sensitive areas where pedestrian access is desired

WIDTH

Primary walkways - 8'. In certain circumstances, the use of 6' wide paths may be appropriate for minor connections. Areas where horses will be utilizing the trail, a 4 feet wide shoulder is recommended.

CONSTRUCTION

All trail construction shall include the removal of stumps, exposed roots, and branches within the trail section and to a height of 10 feet. No milled lumber shall be used and a trail border is optional.



Natural trail at Marshview Park



Foot Bridge at Red Wing Park

FOOT BRIDGE

USE For pedestrian use

DIMENSIONS 6' to 10' widths; clear spans generally less than 20'. Where steep and unstable banks exist, the bridge's overall length shall be determined accounting for the re-grading and stabilization of the banks. The maximum recommended slope for banks is 3:1.

MATERIALS Southern yellow pine (pressure treated). Timber abutments should be treated for water contact.

DECKING Pressure treated solid sawn wood decking

FASTENERS Hot-dipped galvanized steel

APPROACHES Approaches shall meet ADA requirements. Side slopes shall be stabilized and shall not exceed 6 to 1. Where steeper slopes are necessary, wing walls shall be utilized to stabilize the approaches and minimize erosion.

RAISED WOODEN WALKWAY

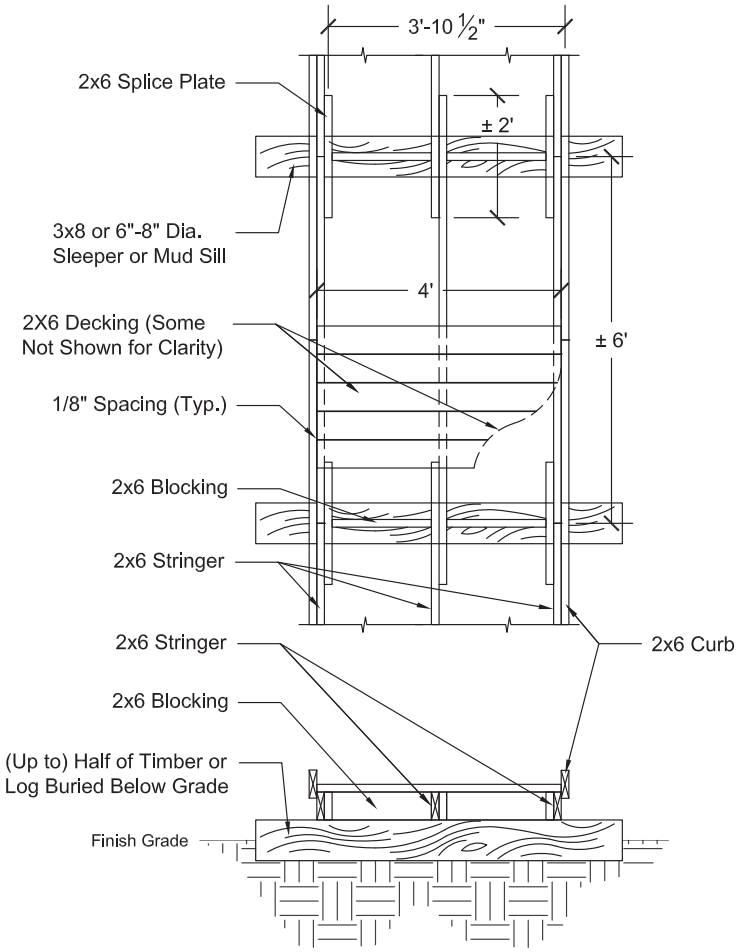



WALKWAYS & TRAILS OPTIONAL RAILING

Walkway/overlook at Lake Lawson/Lake Smith Natural Area

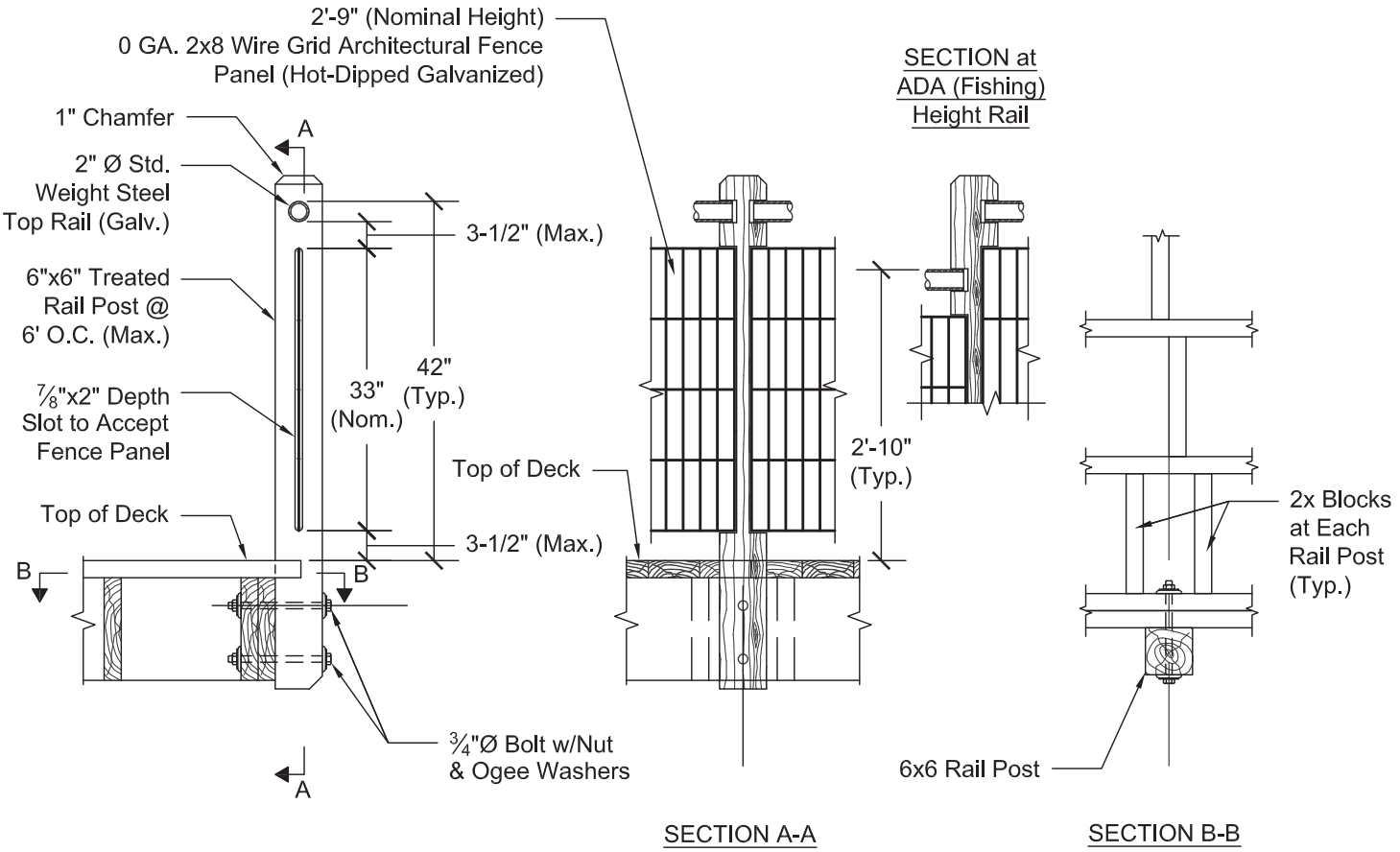



Prefabricated bridge at Marshview Park

PREFABRICATED BRIDGE

USE	For pedestrian and light vehicular use
DIMENSIONS	6′ to 14′ widths; clear spans from 20′ to 100′; span-to- width ratio generally 12:1. Where steep and unstable banks exist, the bridge's overall length shall be determined accounting for the re-grading and stabilization of the banks. The maximum recommended slope for banks is 3:1.
MATERIALS	Southern yellow pine
BEAMS	Glued laminated wood beams
DECKING	Pressure treated solid sawn wood decking
CONNECTORS	Hot-dipped galvanized steel
APPROACHES	Approaches shall meet ADA requirements. Side slopes shall be stabilized and shall not exceed 6 to 1. Where steeper slopes are necessary, wing walls shall be utilized to stabilize the approaches and minimize erosion.
ADA	All bridge designs shall meet ADA requirements.

BRIDGE PROFILE

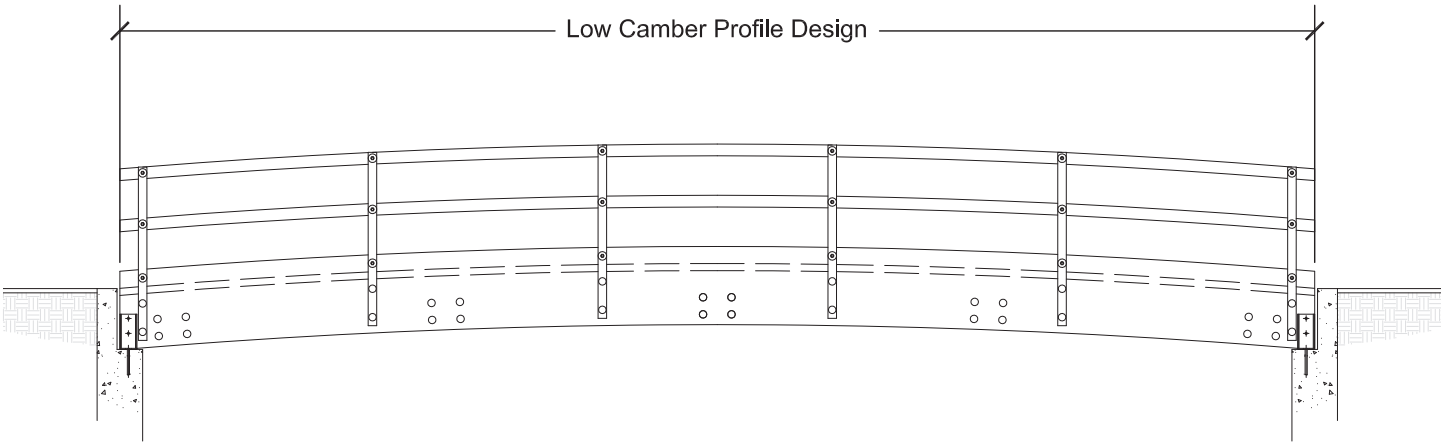

CONCRETE ABUTMENT & TIMBER ABUTMENT

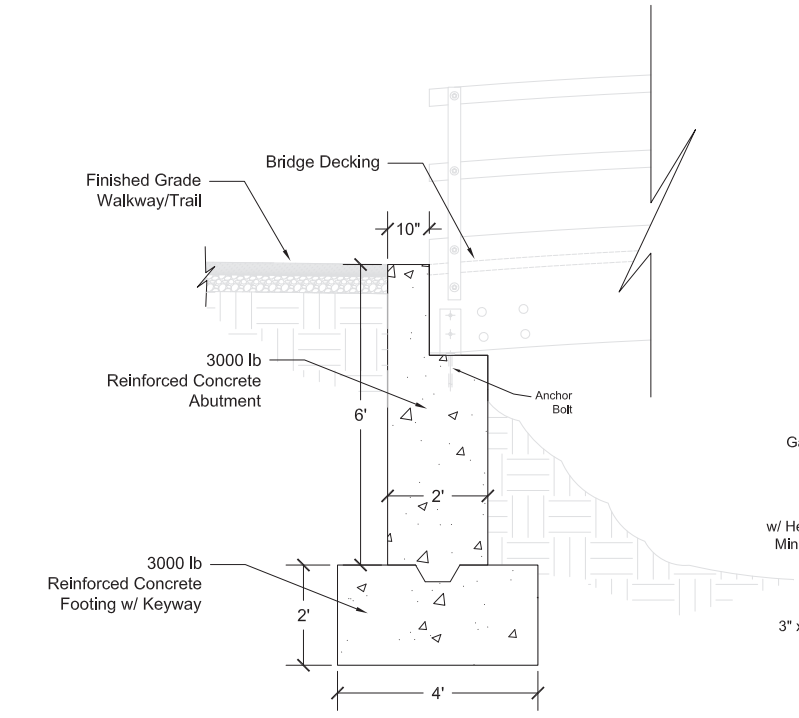

Note: Footings & Abutments must extend past sides of bridge by Min. 2 feet)

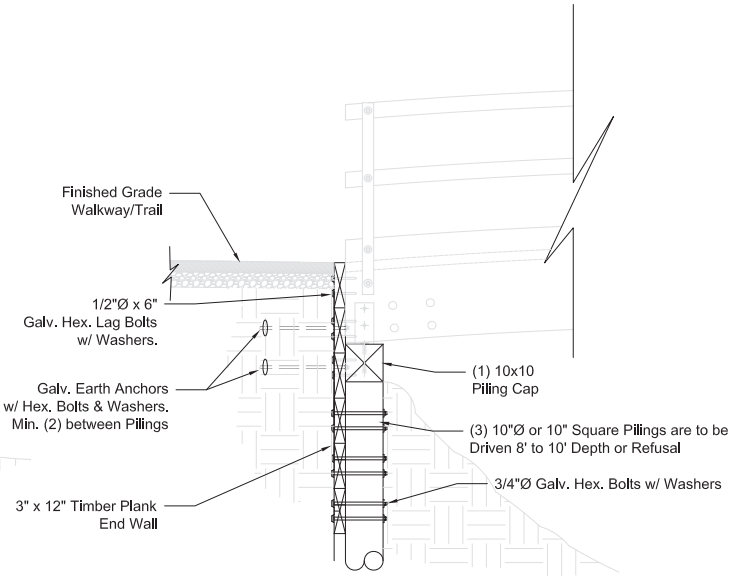

Note: Timber Planks must extend past sides of bridge by Min. 2 feet)

SECTION TEN

Shelters









Wood shelters from top to bottom: Beach Garden Park, Bayville Farms Park, and Red Wing Park

WOOD SHELTER

DESCRIPTION

Wood Shelters are available in a variety of sizes and configurations (square, rectangular, hexagon). All structural members, support columns, beams, and arches are made of pressure treated laminated wood. Sizes range from 12' x 12' to 30' x 60'; hexagonal shelters range from 20' to 45' in diameter.

All shelters shall comply with the following guidelines and standards:

1. The manufacturer of the structural glued laminated wood components shall conform to the manufacturing requirements of the American Institute of Timber Construction Standards and the Standard Specification or Glued Laminated Timber, AITC 117.
2. Quality Control shall be provided in accordance with the American National Standard of Wood Products— Structural Glued Laminated Timber (ANSI/AITC A 190.1) and the American Institute of Timber Construction Inspection Manual (AITC-200).

LAMINATED LUMBER

All lumber shall be kiln dried Southern Pine graded to meet the requirements of Standard Specifications for Structural Glued Laminated Timber, AITC 117. Adhesives shall be wet-use (waterproof) complying with ANSI/AITC A190.1– latest edition.

BEAMS & COLUMNS

All beams and columns shall be embedded glued laminated wood. Column sizes range from 6" x 6" to 8"x8". Beam/column spacing ranges from 8' O.C. to 10' O.C. for larger shelters. Glulam beams/columns are to be pressure treated in accordance with American Wood Preservers' Association Standards.

ROOF DECKS

All roof decks are to be 2 inch (nominal) #1 grade, single tongue and groove with V-joint bottom face, kiln-dried Southern Pine.

FASCIA

All fascia will be 2" x 6" Southern Pine, #1 SPIB Grade, pressure treated in accordance with American Wood Preservers' Association Standards.

ROOF SURFACES

Architectural shingles or standing seam aluminum roof with one layer of 30 lbs. felt (a minimum 25-year written warranty is required) (Gray in color)

FASTENERS

All steel and hardware fasteners are to be hot-dipped galvanized unless stainless steel is specified with purchase order as required by site location.

EXPOSED FACES

All exposed faces of glulam members are to be treated with one coat of factory–applied clear penetrating sealer.

COLUMN FOOTINGS

All column footings are to be 24" to 30" O.D. x 4' depth concrete encasements (see detail).

FOUNDATION

Contractor will excavate 6" of soil and compact subsurface prior to pouring class A3, 3000 psi fiber-reinforced concrete slab. All concrete will be finished by a process of floating and toweling to a smooth non slip light broom finish. All outer edges shall be finished to a 1/4" radius. Surfaces shall have a positive sheet drainage with no greater than 2% cross slope (see detail).

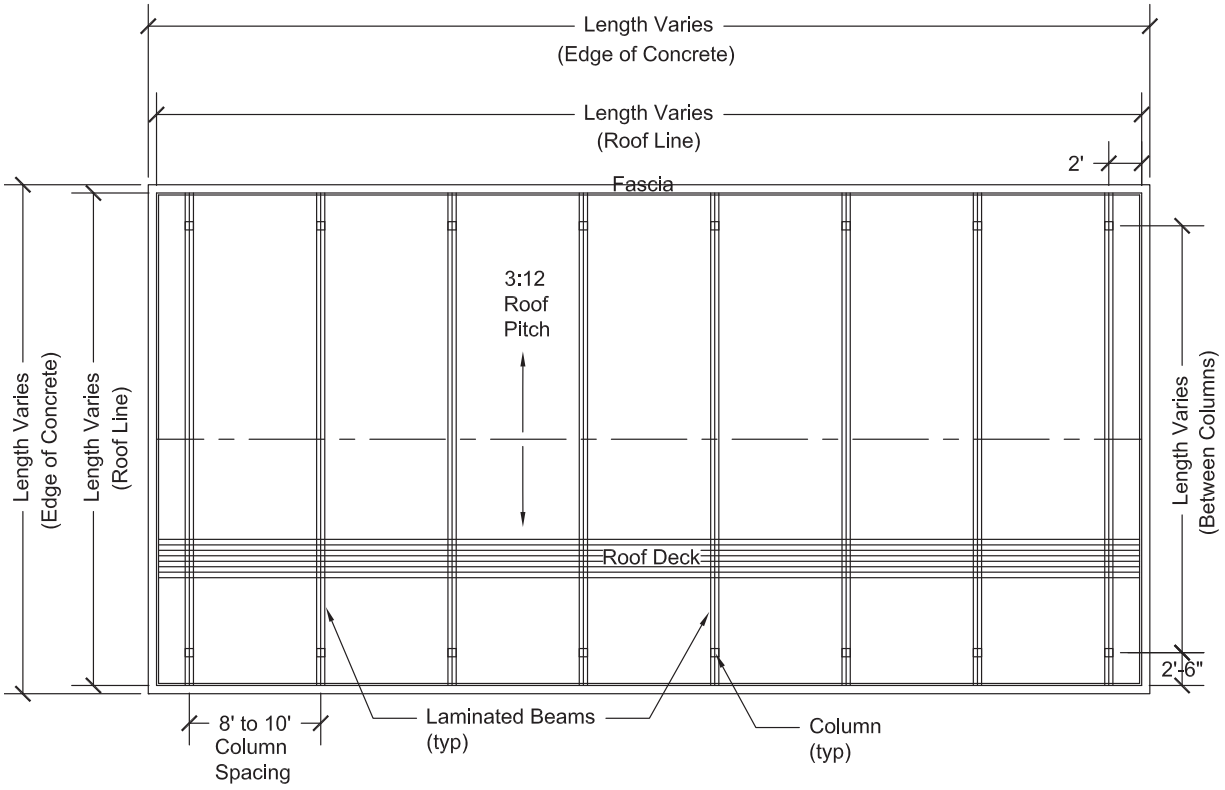
Length Varies
(Edge of Concrete)
Length Varies
(Roof Line)
2'
Fascia
3:12
Roof
Pitch
Length Varies
(Edge of Concrete)
Length Varies
(Roof Line)
Length Varies
(Between Columns)
Roof Deck
2'-6"
8' to 10'
Column
Spacing
Laminated Beams
(typ)
Column
(typ)

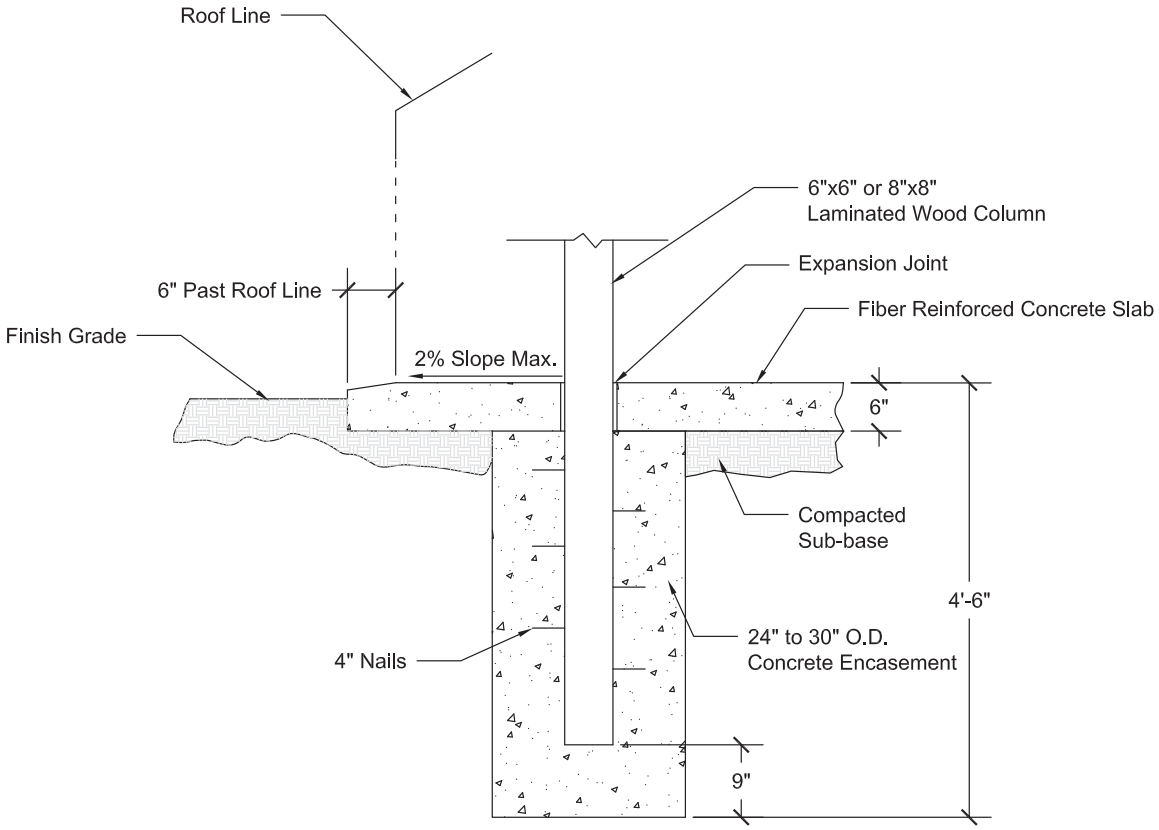
Roof Line
6"x6" or 8"x8"
Laminated Wood Column
Expansion Joint
6" Past Roof Line
Fiber Reinforced Concrete Slab
Finish Grade
2% Slope Max.
6"
Compacted
Sub-base
4'-6"
24" to 30" O.D.
Concrete Encasement
4" Nails
9"

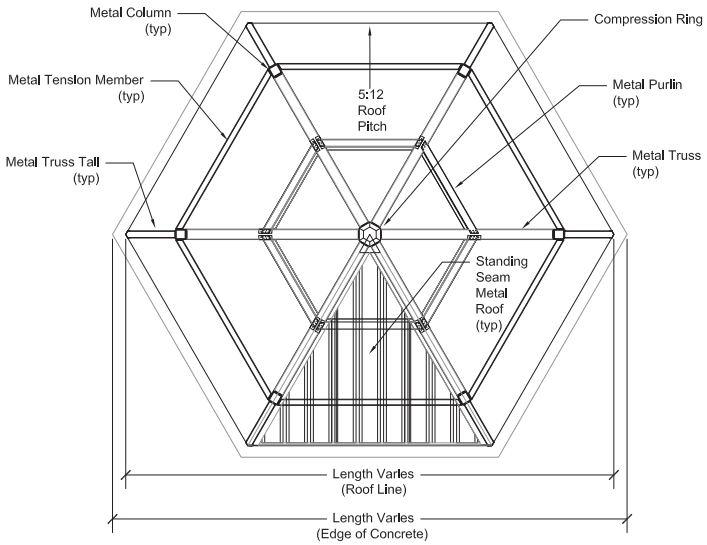

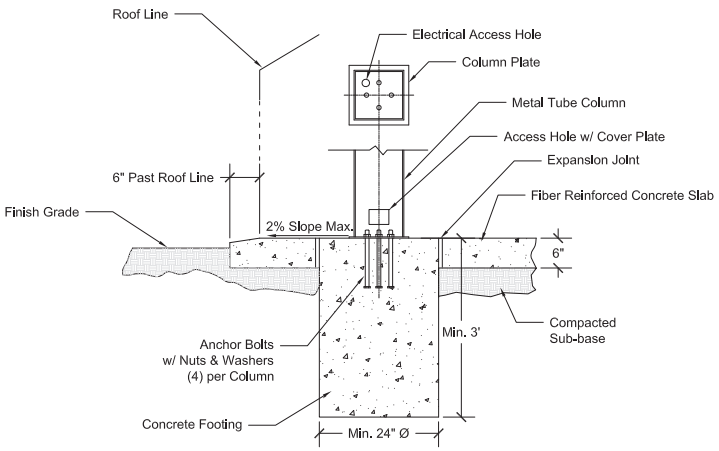



Metal shelter at Princess Anne Athletic Complex

METAL SHELTER

DESCRIPTION Metal shelters are available in a variety of sizes and configurations (square, rectangular, hexagon). Sizes range from 12' x 12' to 30' x 60'; hexagonal shelters range from 20' to 45' diameter.

All metal shelters shall comply with the following guidelines and standards:
All material and fabrication shall comply with the American Society for Testing and Materials (ASTM) guidelines and specifications as related.

STRUCTURAL FRAMING Columns, rafters, tie-beams, purlins, etc. shall be Hollow Structural Sections (HSS) meeting ASTM A500 grade B. "I" beams tapered columns, open "C" channels, cold-formed box sections or wood products shall not be accepted.

COMPRESSION RINGS Compression rings shall be made of structural channel sections or welded plate sections that meet ASTM A36 grade steel.

STRUCTURAL CONNECTIONS Structural connections shall be made with A325 high-strength bolts and A563 structural nuts, ASTM A307 grade anchor bolts, self-drilling screws and pop-rivets.

METAL ROOF PANEL 24-gauge galvalume roof panel with a Kynar 500 paint finish or similar. The ribs shall be 1-3/16" high and 12" on center. Roof panel coverage shall be 36" wide; all angles shall be factory cut. The ribs shall run with the slope of the building for proper drainage.

ROOF COLOR OPTIONS Gray

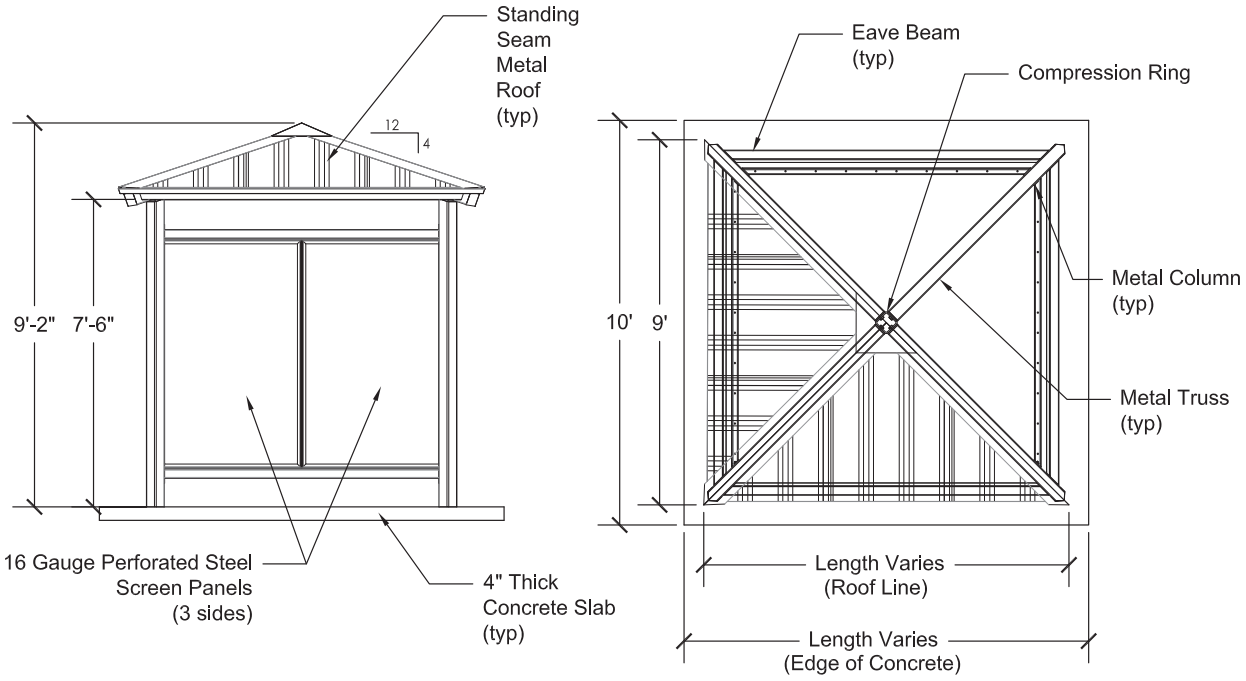

PREFABRICATED "PORTABLE LAVATORY" SHELTER



Portable lavatory at Stumpy Lake Natural Area

DESCRIPTION Portable lavatory shelters are available in two shapes (square and rectangular). Sizes are 9' x 9' square or 9' x 18' rectangle.

SERVICE STANDARDS Portable lavatory shelters will only be installed in parks that are designed for two or more hours of experience and do not have permanent restroom facilities on site.

STRUCTURAL FRAMING Columns, trusses, eave beams and windscreen frames shall be hollow structural sections meeting ASTM A500 grade B. Powder coated and oven cured. Color: "tan"

COMPRESSION TUBE/RING Compression tube/ring shall be made of structural channel sections or welded plate sections that meet ASTM A36 grade steel.

STRUCTURAL CONNECTIONS Structural connections shall be made with A325 high-strength bolts and A563 structural nuts, ASTM A307 grade anchor bolts, self-tapping screws and pop-rivets.

VISUAL WINDSCREEN PANELS Panels shall be individually framed with 16 gauge perforated steel inserts powder coated and located on (3) side of the shelter. Color: "tan"

METAL ROOF PANELS 24 gauge galvanized roof panel with a Kynar 500 paint finish or similar. The ribs shall be 1-3/16" high and 12" on center. Color:"light gray"

FOOTING/ANCHORING SYSTEM Anchor attachment and footings designs are site and situation specific. Follow manufactures recommended design to meet current city codes.



Shade canopies at the dog park at Red Wing Park

SHADE CANOPY

DESCRIPTION Shade Canopies are available in a variety of sizes and configurations. The preferred configuration is the T-Cantilever style.

All shade canopies shall comply with the following guidelines and standards:
All material and fabrication shall comply with the American Society for Testing and Materials (ASTM) guidelines and specifications as related.

USE Shade canopies provide relief from the sun installed above bleachers and benches and in areas where little to no shade exists.

STRUCTURAL FRAMING Columns, rafters, tie-beams, purlins, etc. shall be Hollow Structural Sections (HSS) meeting ASTM A500 grade B. "I" beams tapered columns, open "C" channels, cold-formed box sections or wood products shall not be accepted.

STRUCTURAL CONNECTIONS Structural connections shall be made with A325 high-strength bolts and A563 structural nuts, ASTM A307 grade anchor bolts, self-drilling screws and pop-rivets.

SHADE MATERIAL Green

POST COLOR OPTIONS Black

SECTION ELEVEN

Lighting



Field lights at Bayville Farms Park athletic fields



Area lighting at Littie Island Park Fishing Pier





STREET, PARKING LOT, PATH, AND AREA LIGHTING



Path lighting along Princess Anne Road corridor

DESCRIPTION Lighting standards are chosen based on products available at a reasonable cost, continuously stocked, and easily maintained through Public Works Building Maintenance.

PATH LIGHTING

TYPE	Black Shoe Box or Bell Shaped
LAMP	LED
POLE	10′ or 14′ mounting height; round tapered, fiberglass pole; finish dependent upon site

STREET AND PARKING LOT LIGHTING

TYPE	Cobra Head Flat Lens Lamp: LED
POLE	25′ or 30′ mounting height; tapered concrete or fiberglass poles with 6′ to 12′ arms; gray finish

AREA LIGHTING

TYPE	Colonial
LAMP	LED
POLE	10′ or 14′ mounting height; round tapered, fiberglass pole; black finish

SECTION TWELVE

Fencing



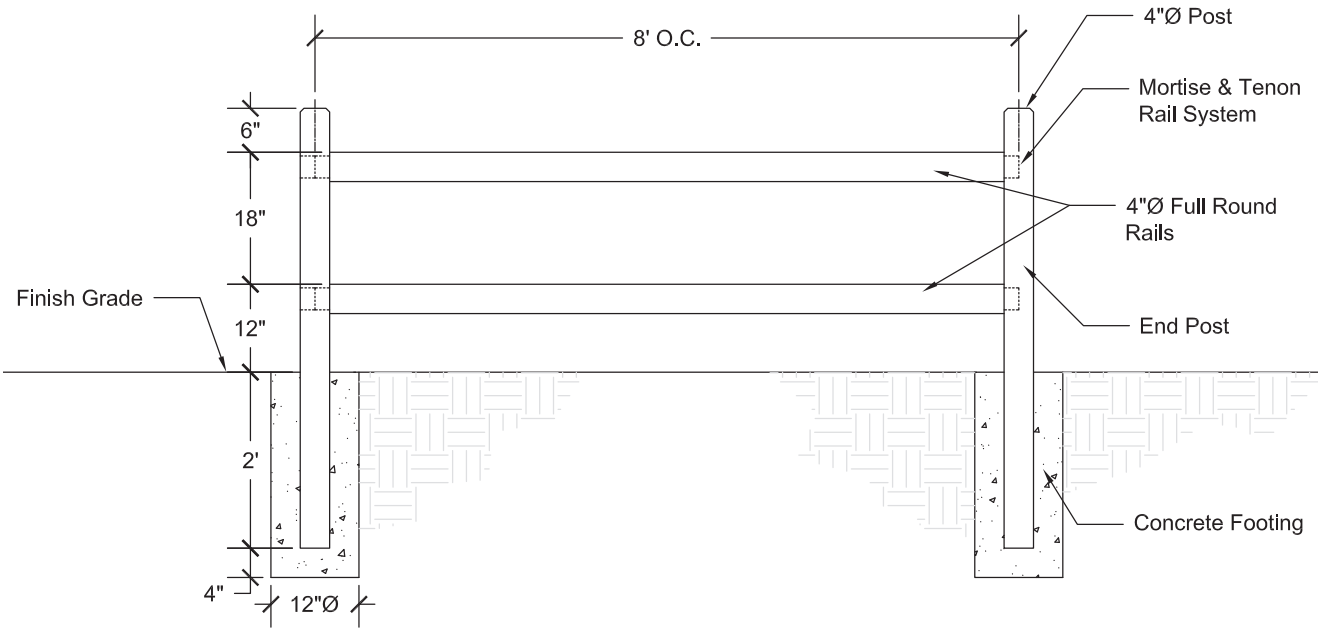







Typical two rail wood fencing at Brigadoon Park (top), Holly Green Park (middle), and with weld-wire feature at Newsome Farm Park (bottom).

TWO-RAIL WOOD FENCING

PRE-INSTALLATION All new fencing plans and layouts shall be designed by the Planning, Design, and Development Division

HEIGHT 3' Tall

POST All post shall be 4" diameter by 5' long pressure treated pine that are mortised to accept rail ends and chamfered post top.

RAILS All rails shall be full round 4" diameter by 8' long pressure treated pine with the ends tampered to form a tenon that will be seated in the mortise of the posts and then fastened using #10d galvanized nails. All nail heads will be left protruding out 1/8" after installation.

FASTENERS All fasteners/hardware shall be hot dipped galvanized.

FINISH Fencing materials shall be made from pressure treated pine and shall be left in it natural condition. A weather resistant sealer maybe applied if desirable.

FOOTINGS All posts shall be in cased in concrete as shown in attached details.

THIRD RAIL OPTION 4' tall (3) three full round rail wood fencing to be used in select cases.

OPTIONAL WELD WIRE Weld wire may be specified to be attached to the inside of the rails for added protection in select cases. For this purpose 36"x2"x4" 14 gauge galvanized weld wire shall be utilized.

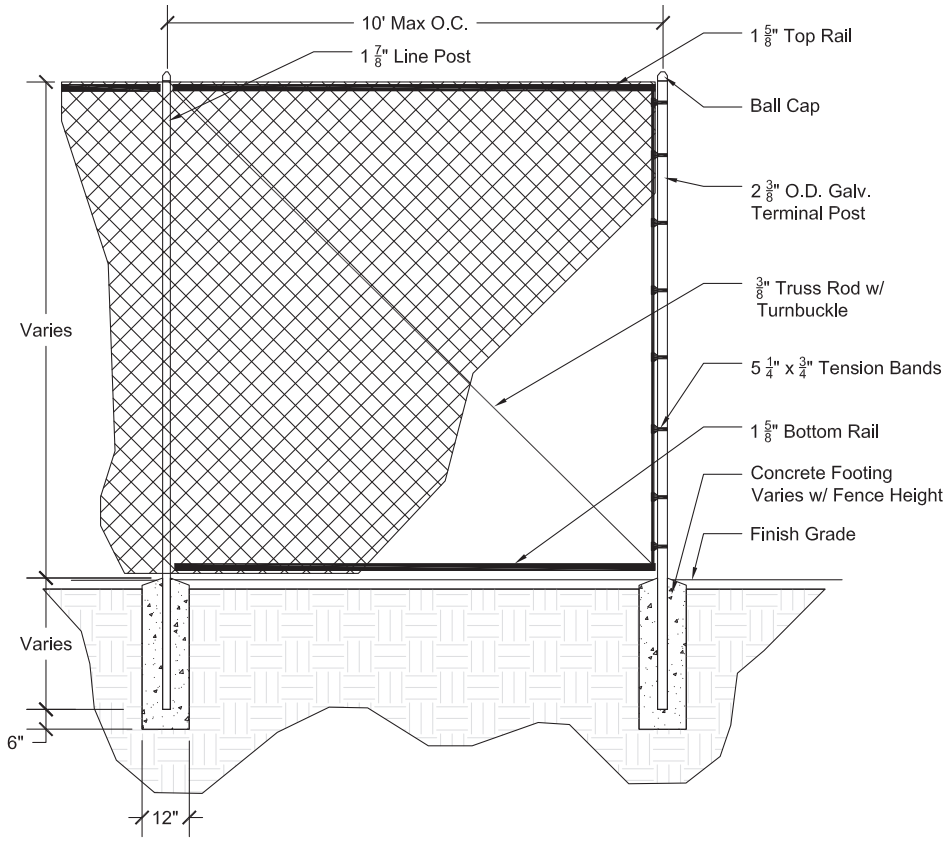

CHAIN LINK FENCE

PRE-INSTALLATION All new fencing plans and layouts shall be designed by the Planning, Design, and Development Division

TYPE All security fencing shall be constructed using 4' - 10' tall black vinyl coated chain link fence.

TOP RAIL 1-5/8" O.D. galvanized metal Bottom Rail: 1-5/8" O.D. galvanized metal Line Posts: 1-7/8" O.D. galvanized metal

TERMINAL POSTS 2-3/8" O.D. galvanized metal

FABRIC 9-gauge mesh core minimum

FASTENERS All fastener hardware will be hot dipped galvanized.

FINISH Posts, rails and hardware shall be black polyester coating 3- mil color powder electrostatically applied (powder coated). Fence mesh shall be vinyl coated.

FOOTINGS All footings for post installation will be a minimum depth of 24-inches below finish grade surface.



Typical chain link fencing around the ballfields at Salem Woods Park (top) and Lynnhaven Park (bottom).

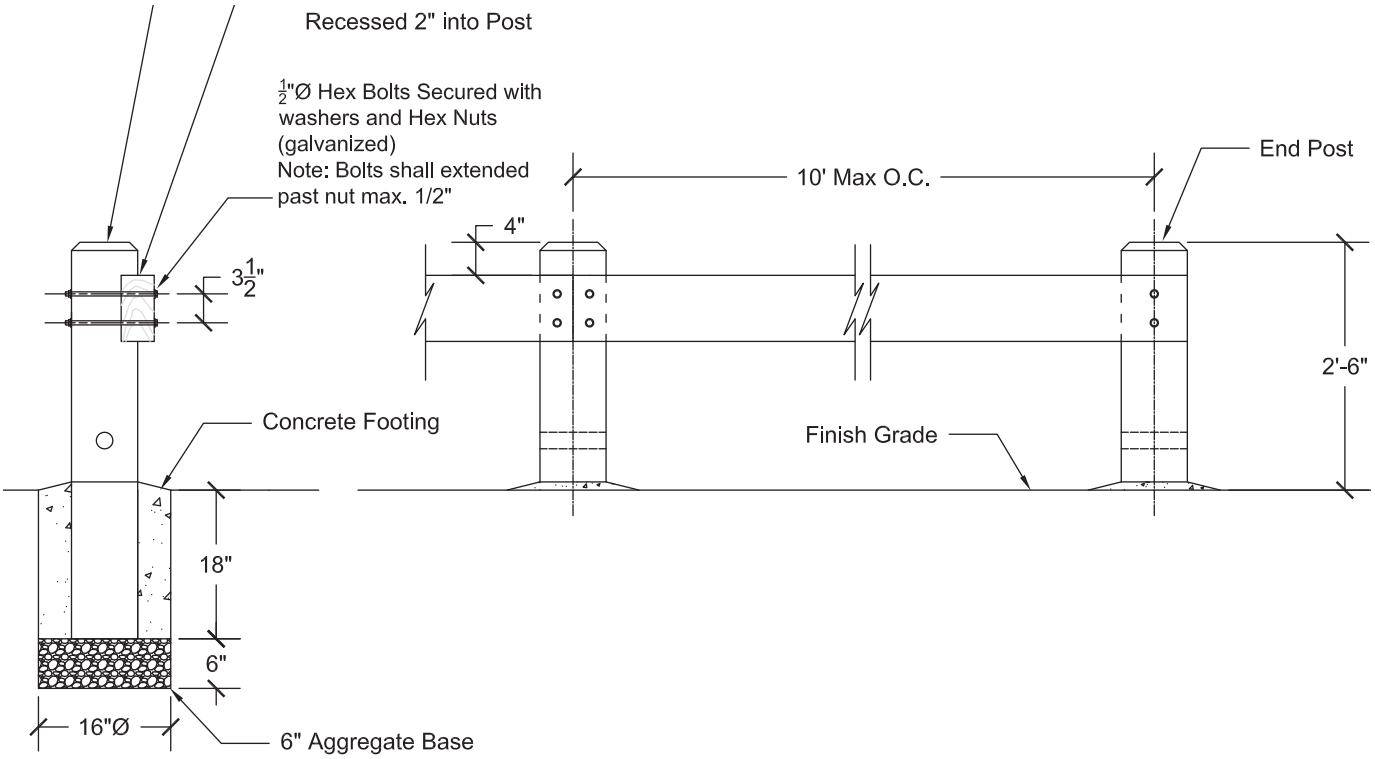



Typical wood guardrail at Lake Lawson/Lake Smith Natural Area playground

WOOD GUARDRAIL

USE Wooden guardrails shall be used wherever there is a need to protect a site and pedestrians from vehicular traffic

POSTS All posts will be 8" x 8" nominal by 4' long pressure treated pine with a chamfered post top.

RAILS All rails will be 4" x 8" by 10' long pressure treated pine. Fasteners: All fastener hardware will be hot dipped galvanized fasteners.

FINISH All fencing members will be made from pressure treated pine in accordance with the standards of the American Wood Pre- servers' Association left in its natural condition.

FOOTINGS All footings for post installation will be a minimum depth of 24-inches below finish grade surface.

SAFETY If guardrail is located within 6-feet of road edge, a 2-inch diameter hole shall be drilled through each post 6-inches above grade.

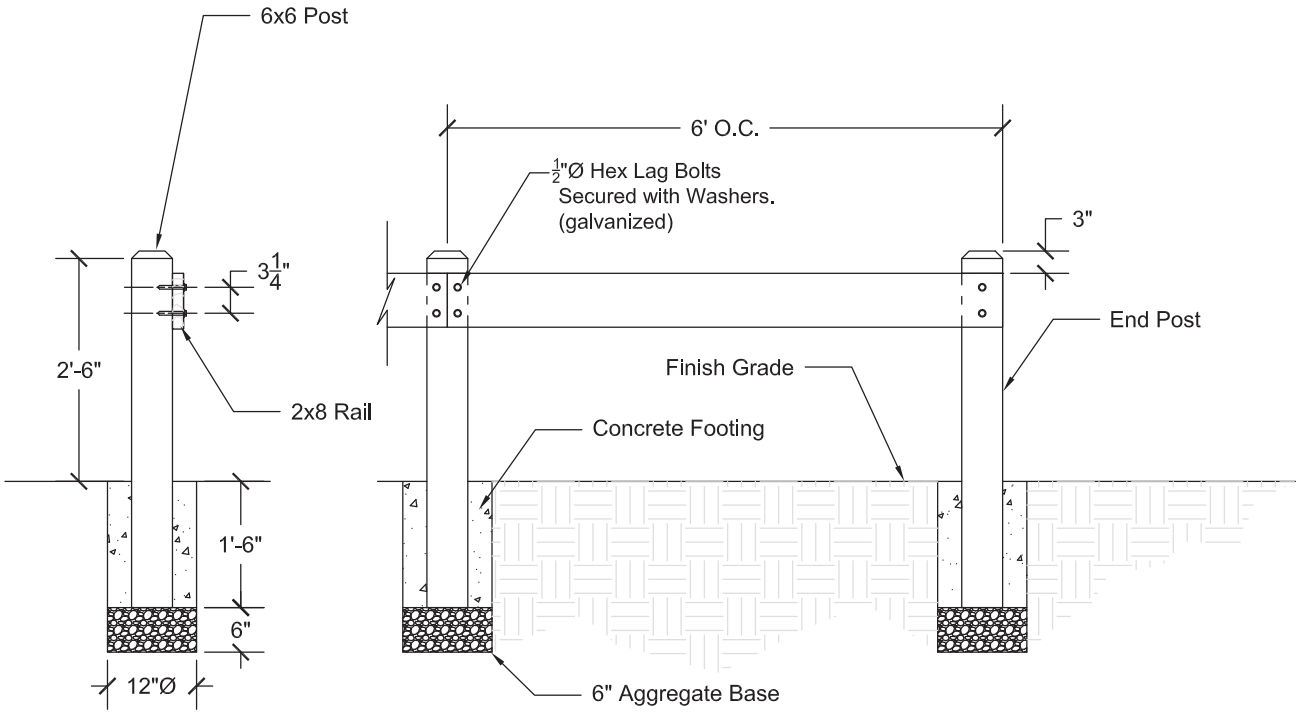

LIGHT WOOD GUARDRAIL

USE

Wooden guardrails shall be used wherever there is a need to protect a site and pedestrians from light vehicular traffic

POSTS

All posts will be 6" x 6" nominal by 4' long pressure treated pine with a chamfered post top.

RAILS

Rails will be 2" x 8" by 6' long pressure treated pine. Fasteners: All fastener hardware will be hot dipped galvanized fasteners.

FINISH

All wood materials will be made from pressure treated pine in accordance with the standards of the American Wood Pre- servers' Association left in its natural condition.

FOOTINGS

All footings for post installation will be a minimum depth of 24-inches below finish grade surface.

SAFETY

This light guard rail shall not be used along road edges. This guard rail should only be used within the interior areas of a park.



Light wood guardrail at Little Island Park





Typical metal-collapsible bollard (top) and wooden bollard (bottom)

BOLLARD

USE Metal collapsible bollards are used where occasional and/or emergency vehicular access is desired. Wooden bollards are stationary and non-removable.

MATERIAL Wooden or powder-coated steel

POSTS All posts shall be similar to the drawing above, no round posts are acceptable.

FASTENERS All fastener hardware will be hot dipped galvanized fasteners. All bollards shall be fastened to concrete.

FINISH Metal bollards shall be powder coated; wooden bollards shall be pressure-treated.

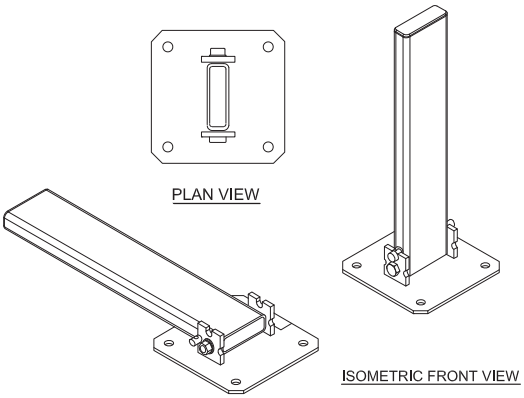

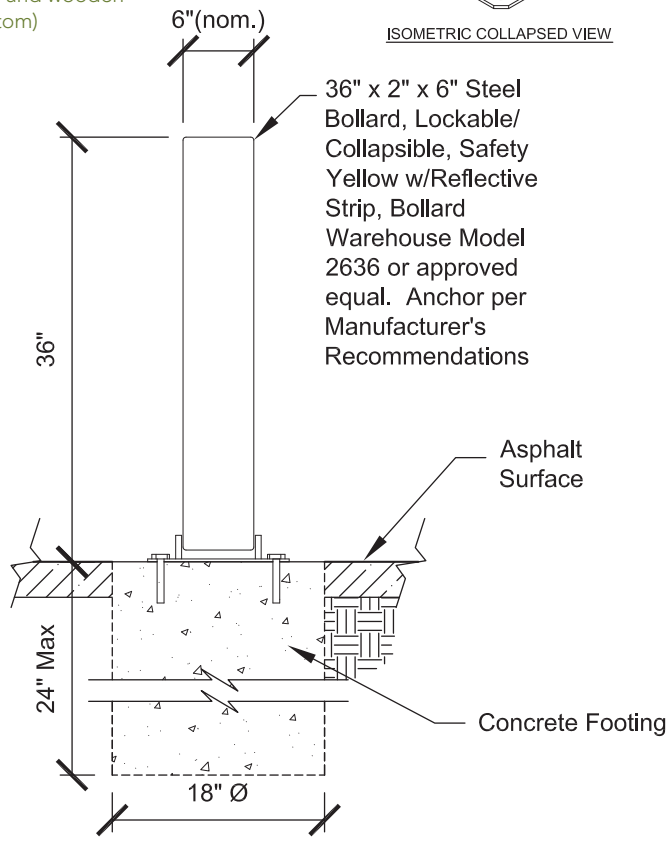

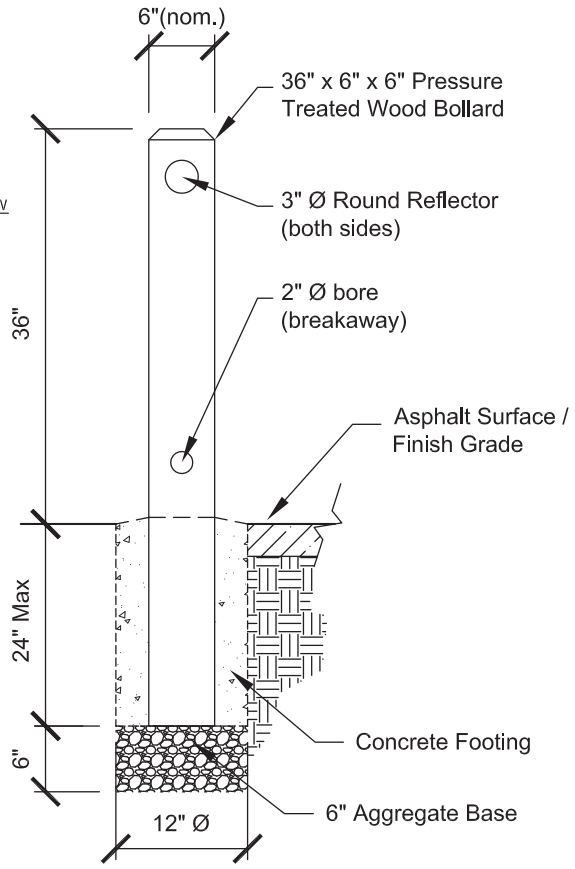

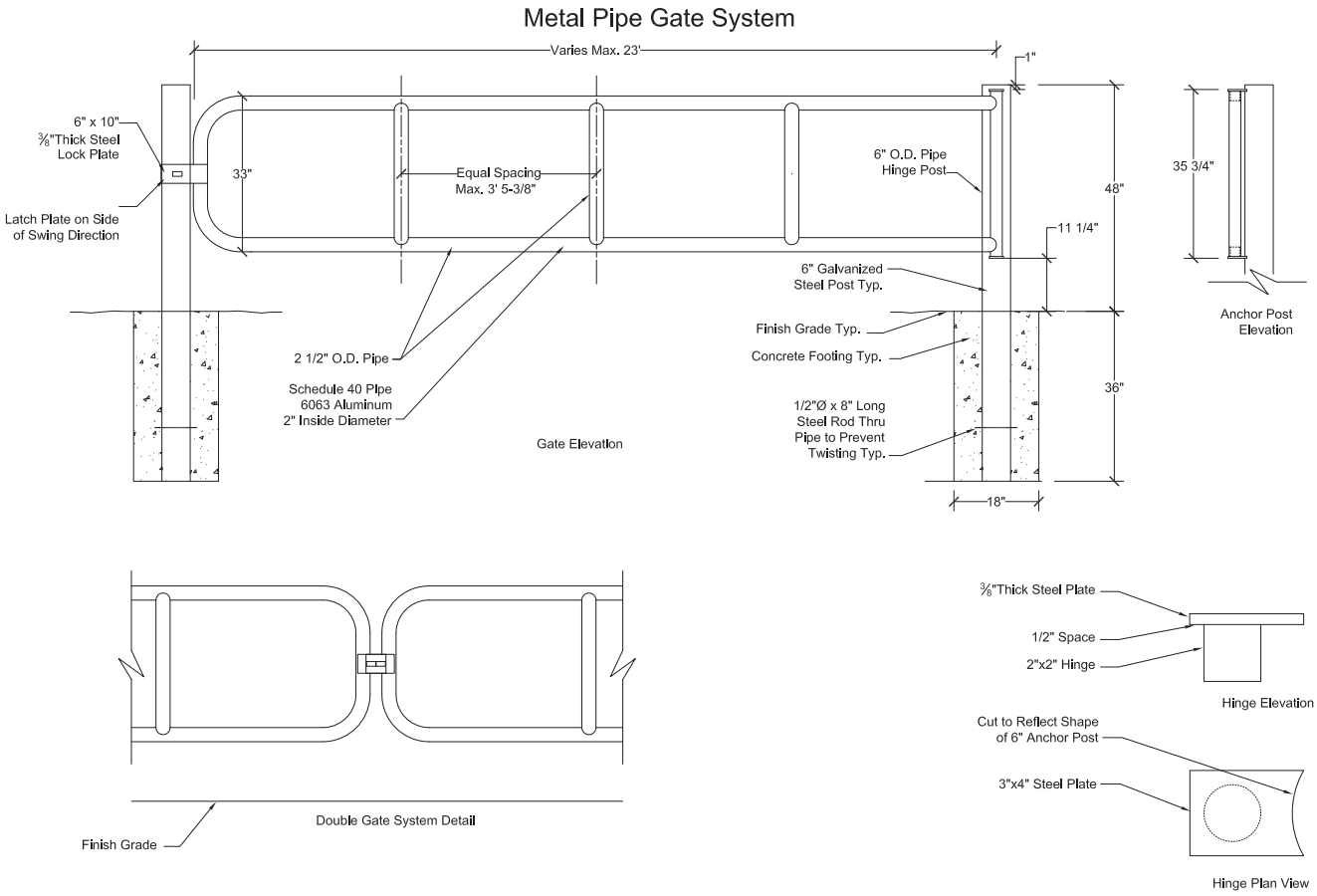

ENTRANCE GATES

USE For use where access is to be restricted. If gate opening is larger than 23' a twin gate system is required

MATERIAL All gate pipe shall be schedule 40 6063 Aluminum

POSTS 6" gate stop post, 6"anchor post, hinges, locking plate shall be made of galvanized steel. Hinge post and anchor post shall be capped with steel plate welded to pipe and reflect shape of post

FASTENERS All fasteners hardware shall be hot dipped galvanized and all welds shall be continuous and ground down to be free of all protrusions

FINISH Hinges, locking plates and welds to receive one coat of primer (galvanized color)



Typical metal entrance gate at West Neck Creek Natural Area

SECTION THIRTEEN

Signage



SIGNAGE

General Standards

DESCRIPTION

Signs are an important element in a park system. They identify, inform, regulate, protect, and educate. The goal for these standards is to establish consistency throughout the Virginia Beach park system, reduce the overall number of signs placed at park sites, and develop easily recognizable sign panels that efficiently relay the necessary information. For the purposes of this document, signs have been broken out into two main categories: informational signage and regulatory signage.

- Informational signs include three sub-categories: entry or identification signage, way finding signage, and educational signage.
- Regulatory signs include two sub-categories: standard MUTCD Manual of Uniform Traffic Control Devices signs, and site specific warnings and regulation signage.

SITE SIGNAGE PLAN

As new park sites are being developed, a site signage plan shall be an integral part of the site's development. The plan shall identify the location and design of all site signage. Additionally, for developed sites that are becoming overrun with the addition of numerous signs over the years Planning, Design & Development shall evaluate all new signage and develop site signage plans.

MULTIPLE SIGNS

The placement of multiple signs on fences, trees, light poles, etc. is prohibited.

LANDSCAPING

All entry or identification signage shall be planted at the base. A minimum of a 75 square foot planting bed shall be utilized; all plans shall be reviewed by Landscape Architect.

GRAPHIC COMPONENTS

Several graphic components make up the building blocks for the Virginia Beach sign program. These components are used in specific ways to simply and effectively communicate consistently throughout the park system. They are listed here and then further discussed below and on the following pages.

TYPOGRAPHY

FONT TYPE

Times New Roman - Type face utilized on all signs for the park name
Sans Serif - Type face utilized on all signs for other supportive text located on the sign

FONT STYLE

The utilization of both upper and lower case letters increases the legibility of text and is standard for all signs.

FONT HEIGHTS

Heights of the dominating text shall be either 5", or 6". In general, most neighborhood park signs will utilize 5" tall letters and larger community and signature parks shall utilize 6"-10" tall letters depending on the surrounding environment and sign placement. The size of all other graphic components will be based off of the font size of the dominating text.

CITY SEAL

MATERIAL

Seals can be manufactured in a variety of materials and methods.

COLOR

The full color version shall be utilized for all signs. On dark backgrounds the seal shall be outlined with a thin black line.





Entry signage at Providence Park and marquee signage at Red Wing Park

ENTRY SIGNAGE

DESCRIPTION

Heights of the dominating text shall be 5" or 6". In general, most neighborhood park signs will utilize 5" tall letters and larger community and signature parks shall utilize 6" tall letters. The ultimate determination of letter height shall be based on the surrounding environment, the signs' placement and the viewing distance. The size of all other graphic components will be proportionally related to the length of the name and spacing from the edge. For long park names, the use of two lines is recommended. The following depicts the graphic layout for entry signs.

SIGN PANEL MATERIAL

All sign panels are to be HDPE recycled plastic. (Green/White/Green)

SIGN PANEL COLORS

Green (Pantone # 342 C)

Background shall have white letters and graphics; double sided, flush-mounted Virginia Beach City seal.

SIGN BASE /SUPPORT STRUCTURE

Signs shall be either post mounted at the ends with chamfered tops or attached to a base monument structure.

POST MOUNTED SIGNS

6" x 6" recycled plastic post. Recycled plastic posts shall be gray in color with 1" chamfered top.

MONUMENT BASE SIGNS

Monument style bases shall reflect the character of the site. (i.e. Split Face Block and Brick)

LANDSCAPING

All entry or identification signage shall be planted as the base. A minimum of a 75 square foot planting bed shall be utilized; all plans shall be reviewed by Landscape Architect.

SITE ADDRESS

The site's numerical address shall be located on the entry sign.

MARQUEE SIGNS

Marquee signs shall be used at designated special use and large parks where advertising is needed regularly. Support structure shall be made of brick or split face block.









Typical interpretive educational signage at Lake Lawson/Lake Smith Natural Area and at Princess Anne Commons Gateway Park

EDUCATIONAL SIGNAGE

FORMAT	Header shall occupy approximately 1/8 of the panel height. The dimensions of the sign are typically 2'x3'.
SIGN PANEL	Exterior grade high-pressure laminate fused with anti-UV layers and graffiti resistant technologies
HEADER COLOR	Green (Pantone 342C) background with white letters and Virginia Beach City seal
SIGN BASE/SUPPORT STRUCTURE MATERIAL	Support structure shall be constructed out of high strength aluminum extrusion powder coated black.
SIGN BASE/SUPPORT STRUCTURE COLOR	Flat black
SIGN BASE/SUPPORT STRUCTURE SIZE	3"x3" 1/8" square steel posts. Posts are to be 30" tall plus a 24" extension on a 45° angle
SIGN PLACEMENT	Signs shall be located on either a paved or decked surface adjacent to a walkway or public space surface mounted with ADA connectivity.



Wayfinding signage at
Princess Anne Athletic Complex

WAY FINDING SIGNAGE

DESCRIPTION Heights of the dominating text shall be either 2"-5", although the size will also depend on the site and the viewing distance. The size of all other graphic components will be proportionally related to the height of the text.

SIGN PANEL Aluminum is the standard panel material

COLORS Green (Pantone 342 C) or Blue (Pantone 7706C) background with white letters and graphics.

SIGN SUPPORT STRUCTURE All way finding signs 12" wide or less shall be post mounted on a 2"x2" metal post and a 6"x6" recycled plastic post for over 12" wide signs

SIGN SUPPORT MATERIAL 6" x 6" recycled plastic post for park related regulation signs and 2" x 2" metal posts for traffic and other regulatory signs. Recycled plastic posts shall be gray in color and have 1" chamfered top. Signs can also be mounted to structures.

SIGN PLACEMENT Along roadways, the height to the bottom of the sign shall be a minimum of 5-feet. Along walkway and trails, height to the bottom shall be between 4-feet and 5-feet.





Regulatory signage at Princess Anne Commons Gateway Park (left) and at Lake Lawson/Lake Smith Natural Area (right)

REGULATORY & WARNING SIGNS

GRAPHIC STANDARD SYMBOLS

Nationally recognized graphic symbols shall be used whenever possible to relay information. Recreational symbols can be found in the Manual of Uniform Traffic Control Devices (MUTCD), "Recreational and Cultural Interest Signs."

Where an activity is prohibited, the standard red circle with slash shall be utilized.

DIRECTIONAL ARROWS

Standard MUTCD directional arrows shall be utilized.

GRAPHIC COMPONENTS

DESCRIPTION

All signs shall conform to MUTCD; The Manual of Uniform Traffic Control Devices or MUTCD defines the standards used by road managers nationwide to install and maintain traffic control devices on all streets and highways. The MUTCD is published by the Federal Highway Administration (FHWA).

SIGN PANEL

Aluminum

SUPPORT POSTS MATERIAL

Posts shall be 2" x 2" break-a-way metal posts.

OTHER REGULATORY - INDIVIDUAL

TEXT HEIGHT	Heights of the text shall be 1"-2", although, the size may vary slightly depending on the site and the viewing distance. The size of all other graphic components will be proportionally related to the height of the text.
TEXT STYLE	San Serif
SIGN PANEL	Aluminum
HEADER COLOR	Green (Pantone 342 C) background with white letters and City seal
SIGN PANEL COLOR	White with black letters
SIGN SUPPORT MATERIAL	For signs over 12" use: 6"x6" recycled plastic post. Recycled plastic posts shall be gray in color and have 1" chamfered top. For signs under 12" use: 2"x2" metal post
LOCATION	Signs shall be located at the entrance to the facility on either a paved or decked surface adjacent to a walkway or public space.

OTHER REGULATORY - COMBINED

TEXT HEIGHT	Heights of the text shall be 1"-2", although, the size may vary slightly depending on the site and the viewing distance. The size of all other graphic components will be proportionally related to the height of the text.
TEXT STYLE	San Serif
SIGN PANEL	Aluminum
HEADER COLOR	Green (Pantone 342 C) or red (Pantone 187 C) background with white letters and graphics
SIGN PANEL COLOR	White with black letters
SIGN SUPPORT STRUCTURE	Individual regulatory signs shall be post mounted.
SIGN SUPPORT MATERIAL	**For signs over 12" use:** 6"x6" recycled plastic post. Recycled plastic posts shall be gray in color and have 1" chamfered top. **For signs under 12" use:** 2"x2" metal post
LOCATION	Signs shall be located at the entrance to the facility on either a paved or decked surface adjacent to a walkway or public space.

SECTION FOURTEEN

Site Furnishings



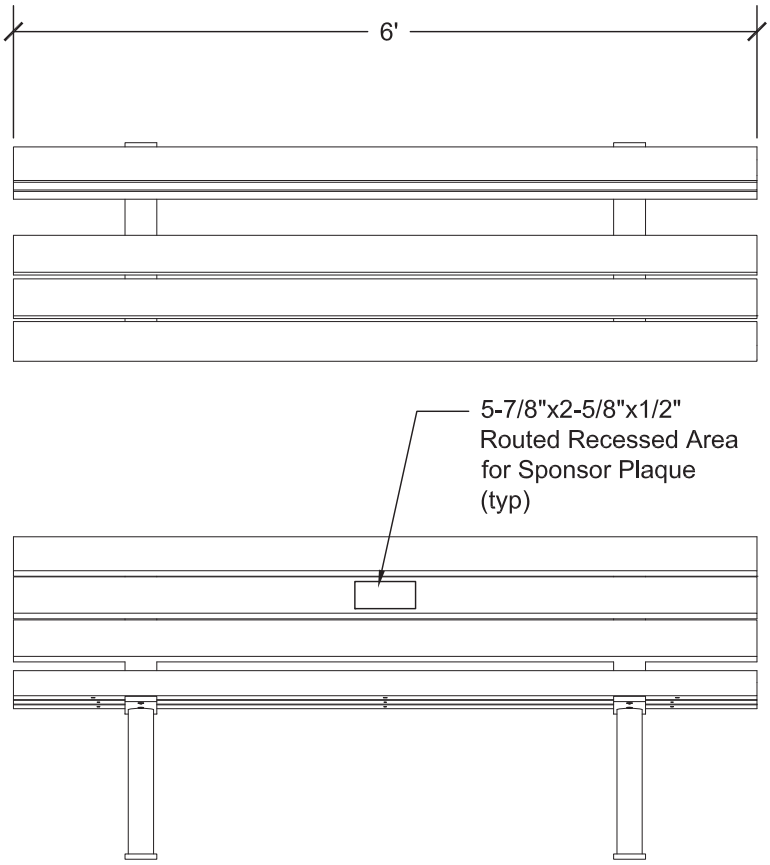

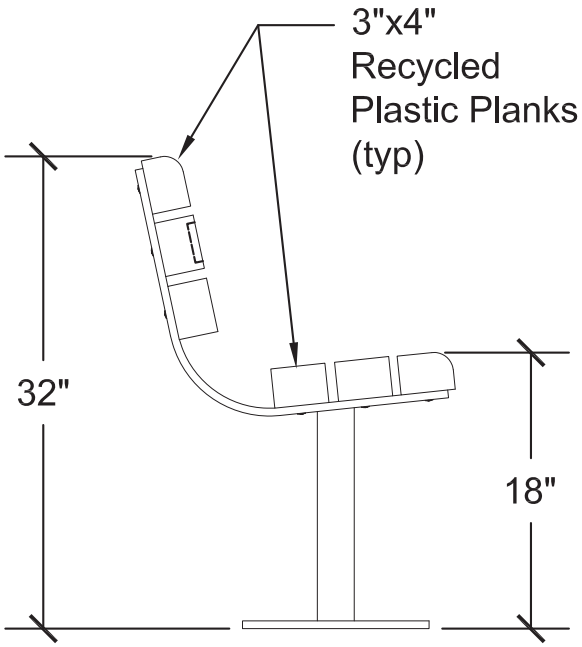



Recycled plastic benches at Munden Point Park

BENCH

6' LONG RECYCLED PLASTIC BENCH

STANDARD COLOR	Dark Green or Similar
LOCATION	All benches (outside of play-systems) shall be located on a min. 3'-6" x 8' concrete pad directly connected to an adjacent pedestrian walkway.
FRAMES	Frames shall be made of 3" O.D. support pipe. All MIG welded frame. Bracing shall be made of 3" x 1/2" flat steel bar. All framing shall be powder coated (black).
PLANKS	All seats and backs shall be 3" x 4" recycled plastic planks. (Dark green)
MOUNTING	All benches outside of the borders of a play-system will be surface mounted. All benches within the play-system borders shall be in-ground mounted.
FASTENERS	All hardware will be zinc plated.
DEDICATIONS	Plaques may be attached to the back portion of the bench in a recessed routed area. A City of Virginia Beach program called "Bench Buddies" through the Virginia Beach Parks & Recreation Foundation, will coordinate the purchasing and installation of these dedication plaques.

BENCH INSTALLATION

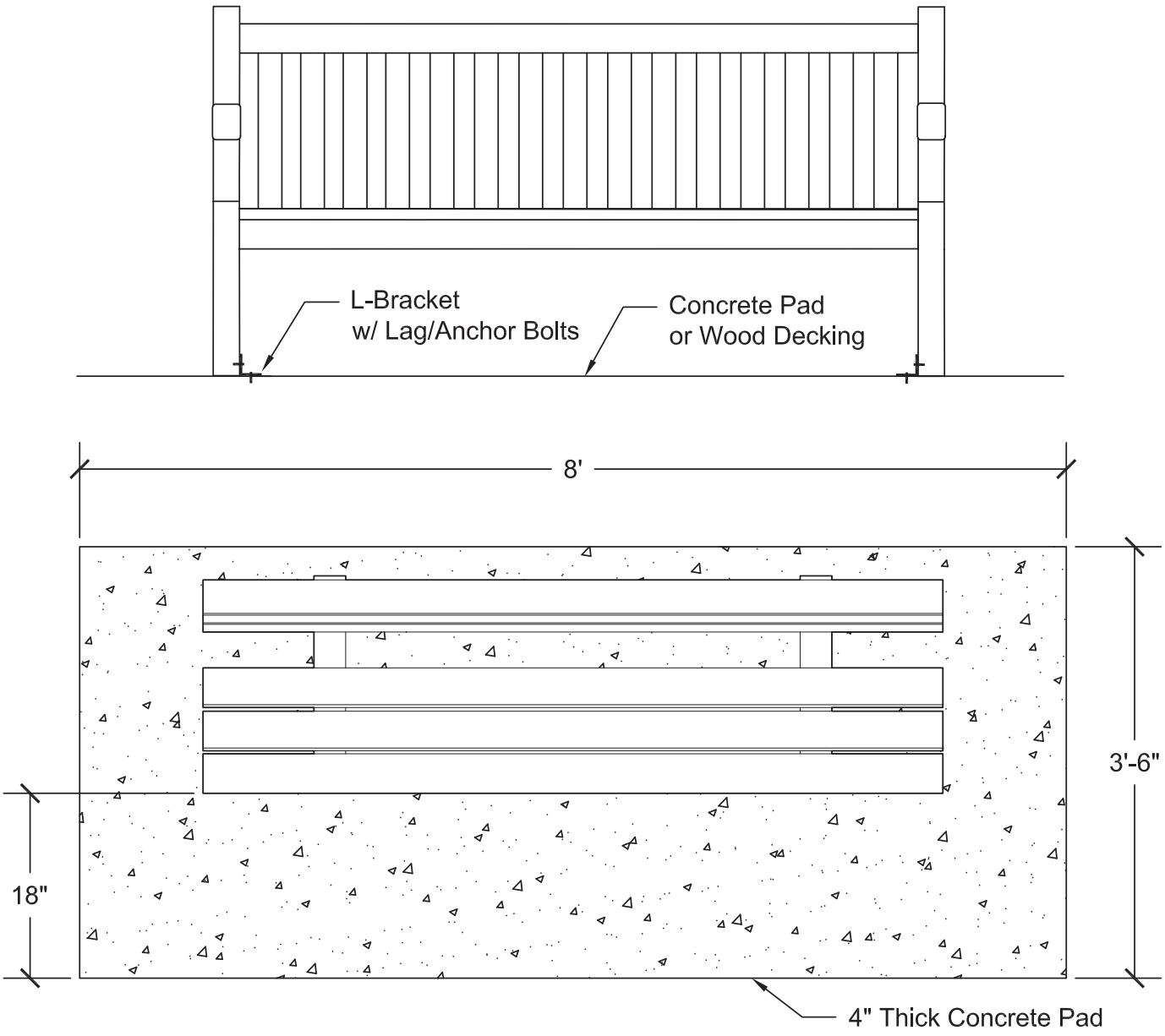

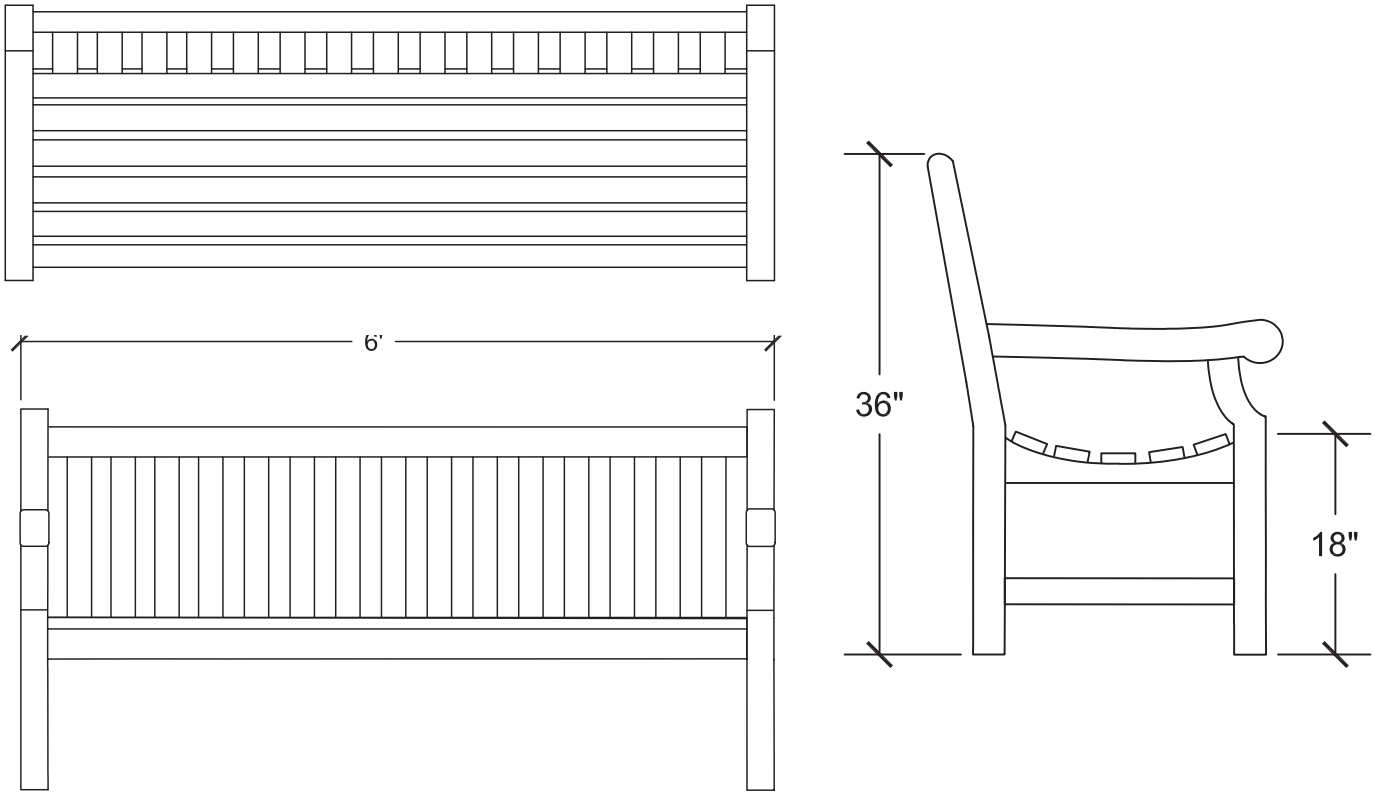



Teak bench at Beach Garden Park

6' LONG TEAK BENCH

LOCATION	All benches shall be located on a min. 3'6" x 8' concrete pad directly connected to an adjacent pedestrian walkway. This type of bench is also preferred near the ocean and mounted on wooden decks and piers.
MATERIALS	100% kiln dried solid teak wood.
FINISH	Teak benches should be allowed to weather naturally.
FASTENERS	All hardware will be hot dipped galvanized.
TYPE	The all teak wood bench shall be used, as approved, for special or unique situations.
LENGTH	6 feet
WOOD MATERIAL	100% kiln dried solid teak wood
JOINERY	Teak benches shall be manufactured with tightly fitting mortise and tenon joinery.
FINISH	Teak garden furniture shall be extremely smooth to the touch with no rough edges. Teak benches shall be allowed to weather naturally.

BIKE RACK



Bike rack at Princess Anne Commons Gateway Park

DESCRIPTION

All bike racks shall be made of aluminum. Various lengths are available to accommodate the needs of different sites.

FRAME

1-5/8" steel pipe frame with 1" galvanized tubing. Bike racks are available in a variety of sized ranging from 5' to 10'.

LOCATION

Locate bike racks in the vicinity of the activity areas of the park facility. It is essential the racks be visible from areas such as entries, offices, recreation rooms, ball fields, and play areas so that security will be maximized at all times. If lighting is available, locate racks nearby.

INSTALLATION

All bike racks shall be placed on and secured to a 12' x 12' (maximum) pad that is installed flush with surrounding grades on all sides. Extend pad in all directions around the racks so that mowing can be accomplished around racks and bicycles. Generally, 4" cast in place concrete slabs shall be installed except where asphalt, crushed rock or other paving method is approved through the design review process.

GRILL



Park grill at Woodstock Park

DESCRIPTION

All park grills are manufactured in-house by park maintenance staff. Three grill size options are available depending on the intended location. A utility shelf is standard for both the medium and large size grills.

LOCATION

Grills shall be conveniently located to picnic tables/shelters but away from overhangs, low branches, eaves, or other overhead obstructions. A minimum clear space of 5-feet shall extend in all directions. Place grills at a safe distance from foot traffic and play areas.

INSTALLATION

All grill posts shall be surface mounted. Ground space dimensions of the pad shall at a minimum allow for a 3-foot standing area in front of the grill. Generally, 4-inch cast in place concrete slabs shall be installed except where asphalt, crushed rock, decking, or other paving method is approved. A minimum clearance of 27-inches shall be maintained between the finished grade and the bottom of the firebox.

SIZE

Small - 280 square inch cooking surface
Medium - 532 square inch cooking surface
Large - 900 square inch cooking surface

FIREBOX

1/4" side steel plate with integral slots to allow grate to be adjusted to different heights; 12" high firebox walls

GRATE

1/2" round steel bars welded on 1" centers

HANDLES

5/8" round steel bars welded through the sides of the firebox to prevent grate removal; coiled wire hand grips

PEDESTAL

The medium and and grills are stationary. The mini grill rotates 360 degrees.

FINISH

Non-toxic heat-resistant flat black enamel

PICNIC TABLES & INSTALLATION

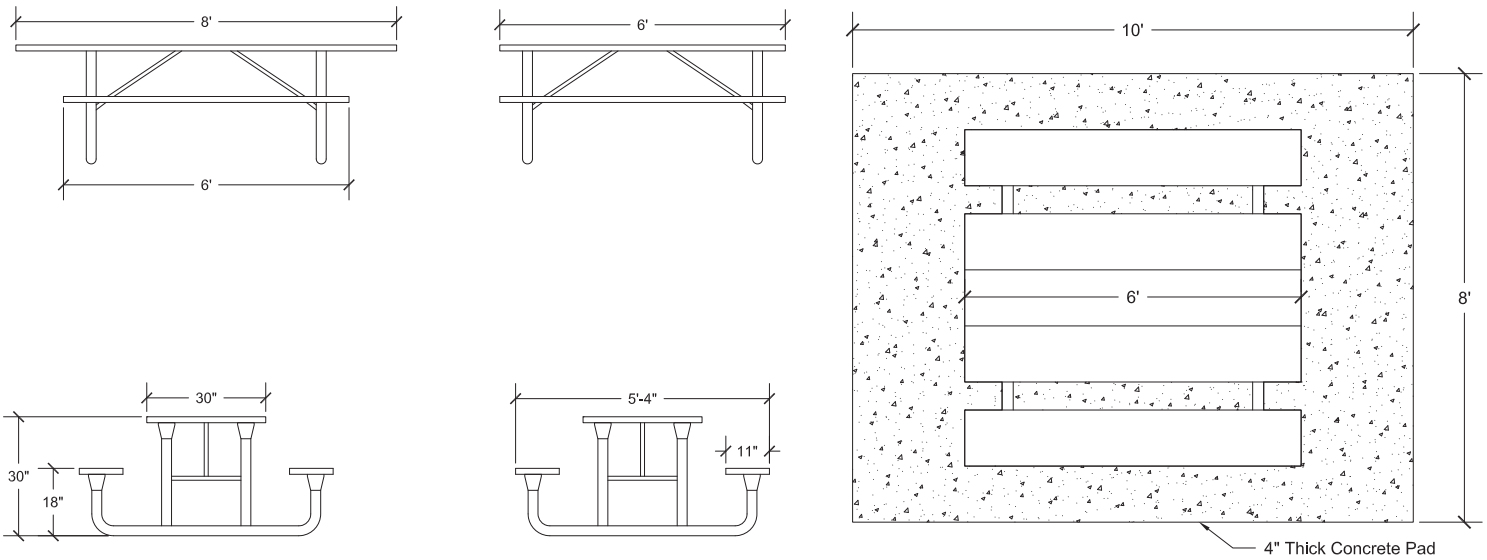



Picnic tables at Lake Lawson/Lake Smith Natural Area

PICNIC TABLE

DESCRIPTION Picnic tables are either regular 6' long or 8' long ADA compliant. Tables are portable and surface mounted to concrete pads.

MATERIALS Aluminum table tops and seat boards with either aluminum or galvanized frames

FINISH Anodized aluminum

FASTENERS All mounting hardware to be corrosion resistant stainless steel

INSTALLATION All tables shall be placed on and secured to a pad with ground space dimensions not less than 10' long and 9' wide, 12.5' long by 9' wide for 8' accesible tables. Generally, 4" cast in place concrete slabs shall be installed except where asphalt, crushed rock, decking, or other paving method is approved. ADA picnic tables shall be located/placed to meet all ADA standards for accessibility.

FASTENERS All hardware will be corrosion resistant stainless steel fasteners or hardware.

TRASH RECEPTACLE

RECEPTACLE STYLE (1)

SITE	Neighborhood Park
TYPE	Recycled metal drum
USE	Trash can standard for most circumstances in neighborhoods
SIZE	55-Gallon
FINISH	Green
OPTIONS	Receptacle enclosure (dark green or gray)
INSTALLATION	All trash receptacles shall be placed on a pad with ground space dimension not less than 3' long and 3' wide and secured with a galvanized chain system. Generally, 4" cast in place concrete slabs shall be installed except where asphalt, decking, or other paving method is approved through the design review process.



RECEPTACLE STYLE (2)

SITE	Signature, Metro, Community and Special Use Facilities
TYPE	Hooded recycled plastic "square" side door access and lockable
USE	Exterior trash receptacle standard for Signature, Metro, Community and Special Use Facilities
SIZE	32- or 52-Gallon
FINISH	Black
OPTIONS	Single plastic liners
INSTALLATION	All trash receptacles shall be placed on and secured to a concrete pad minimum 3' x 3' x 4" Generally, anchored on concrete, but may be anchored on asphalt, wood decking or other paving materials as approved through the design review process.



Typical recycled metal drum trash receptacle at a neighborhood park (above); hooded recycled plastic trash receptacle at Princess Anne Commons Gateway Park (immediately above)



Exterior trash receptacle at Bow Creek Recreation Center

RECEPTACLE STYLE (3)

SITE	Special Use Community Recreation Centers
TYPE	Powder-coated steel "round" with rain bonnet. Side door access and lockable with plastic liner
USE	Exterior trash receptacle standard for Special Use Community Recreation Centers and Special Use Facilities
SIZE	36-Gallon
FINISH	Bronze
OPTIONS	Single or split plastic liners
INSTALLATION	All trash receptacles shall be placed on and secured to a concrete pad minimum 3' x 3' x 4" Generally, anchored on concrete, but may be anchored on asphalt, wood decking or other paving materials as approved through the design review process.



Pet waste dispenser at Princess Anne Commons Gateway Park

PET WASTE DISPENSER

USE	Dog waste bag dispensers are to be utilized for encouraging pet owner's to clean up after their pets.
MATERIALS	Dog waste bag dispensers are made of powder-coated galvanized steel
OPTIONS	The dispenser may be stocked with two boxes (400 total) of biodegradable bags, or where deemed appropriate a neighborhood may supply bags as directed by operational and maintenance staff members.
INSTALLATION	Dispensers shall be attached using stainless steel fasteners to 2" x 2" standard metal posts. Installation shall be located directly next to a trash enclosure at all times. Should be located to accommodate ADA compliance.

VIRGINIA BEACH PARKS & RECREATION
PLANNING, DESIGN & DEVELOPMENT DIVISION
2408 COURTHOUSE DRIVE, BLDG 21
VIRGINIA BEACH, VA 23456
757.385.1100 (TTY: DIAL 711)
VBGOV.COM/PARKS | FUN@VBGOV.COM

PRINTED ON 100% RECYCLED PAPER USING SOY-BASED INKS

THE HEART OF BRAZORIA COUNTY ANGLETON

AGENDA ITEM SUMMARY FORM

MEETING DATE: 10/18/2021

PREPARED BY: Megan Mainer, Director of Parks & Recreation

AGENDA CONTENT: Discussion on an earthen hill to be included in the Freedom Park design.

AGENDA ITEM SECTION: Regular Agenda

BUDGETED AMOUNT: $400,000 for Design Development **FUNDS REQUESTED:** $0

FUND: 40-506-625

EXECUTIVE SUMMARY:

Chris Peltier approached staff about discussing the addition of an earthen hill within Freedom Park in preparation for Freedom Park's design development phase.

Excavation likely won't align with Freedom Park construction but we can preserve extra dirt in a designated location for future use.

On Monday, October 11, 2021, the Parks & Recreation Board discussed this item and gave staff direction to consider an earthen hill in the Freedom Master Plan design if the estimate of probable cost is reasonable.

RECOMMENDATION:

Staff recommends ABLC determine if an earthen hill should be included in the Freedom Park design.

AGENDA ITEM SUMMARY FORM

MEETING DATE: 10/18/2021

PREPARED BY: Megan Mainer, Director of Parks & Recreation

AGENDA CONTENT: Discussion on preliminary tree planting plan in collaboration with Trees for Houston.

AGENDA ITEM SECTION: Regular Agenda

BUDGETED AMOUNT: $5000 **FUNDS REQUESTED:** $0

FUND: 01-550-330

EXECUTIVE SUMMARY:

Staff is working in collaboration with Trees for Houston and TxDOT to plant seedings, 3-gallon, 5-gallon, 7-gallon, and 15-gallon trees throughout Angleton parks and rights-of-way.

One of the projects Angleton has pursued this past year was the TxDOT Green Ribbon Project. The purpose of the TxDOT Green Ribbon Project is to improve the visual character of TxDOT rights-of-way and highway corridors while minimizing negative impacts of air pollution through planting of trees and other vegetation. The City of Angleton has submitted two projects for consideration which are enclosed in your packet. One includes reforestation on SH288, FM 523, and Loop 274 rights-of-way and another includes vegetation in place of sod under the crepe myrtles on Loop 274. Both projects are currently under review.

If TxDOT is unable to fund both projects fully as a Green Ribbon Project, alternatively, Trees for Houston is committed to donating tree material and will provide the City with costs associated for mass planting.

Subsequent cluster trees planting on SH288, other identified rights-of-way, and within Angleton parks will take place in future years. Once staff has an understanding of spatial requirements for cluster tree plantings and associated costs, a more in-depth long-term tree planting plan will be developed and included as an annual budgetary request.

Additionally, Chris Peltier has recommended the Parks & Recreation Board and ABLC recommend a proclamation confirming commitment to the preservation of woodlands in all City parks. Staff has reached out to the City of Lake Jackson who may have a similar proclamation.

RECOMMENDATION:

Staff recommends ABLC provide feedback on the preliminary tree planting plan and proposed proclamation.

TREE RESTORATION MATERIAL

OAKL03 3 gal Live oak	937
CYPRBALD03 3 gal Bald Cypress	938
RIVERB03 3 gallon Riverbirch	937
SUGARBRY03 3 gallon Sugarberry	938
ASHGRN03 3 gal green ash	938
MAPRED03 3 gallon Red Maple	938
Pecan 3 gal Pecans	937
Americaelm03 3 gallon American elm	937
Pine03 3 gallon Loblolly Pine Tree	938
SYCA03 3 gallon Sycamore	937
SWEETGUM03 3 gal Sweetgum	937
OAKS03 3 gal Shumard Oaks	937
OAKSWAM03 3 gallon Swamp Chestnut oak	938
BUTTONBUSH03 3 gallon Buttonbush	938
WM03 Wax Myrtle #3	937
BEAUTAMER03 3 gallon American Beauty Berry	2,000

1220	ACER rubrum Red Maple Rootmaker
1220	CALLI americana American Beautyberry Rootmaker
1220	CARYA illinoinensis Native Pecan Rootmaker
600	CERCI canadensis Eastern Redbud Rootmaker
600	CERCI canadensis var. texe Texas Redbud Rootmaker
1220	LIQUI styraciflua Sweetgum Rootmaker
1220	MALVA drummondii Turk's Cap Rootmaker
1220	MYRIC cerifera Southern Wax Myrtle Rootmaker MT
1220	PINUS taeda Loblolly Pine Rootmaker
1220	PLANT occidentalis American Sycamore Rootmaker
1220	QUERC alba White Oak Rootmaker
1220	QUERC macrocarpa Burr Oak Rootmaker
1220	QUERC shumardii Shumard Oak Rootmaker
1220	QUERC virginiana Live Oak Rootmaker
1220	TAXOD distichum Bald Cypress Rootmaker
1220	ULMUS americana American Elm Rootmaker
1220	ULMUS crassifolia Cedar Elm Rootmaker
=====	
19500	

Loop 274 Landscape

4 MEDIANS TOTAL: 274 LOOP @ CANNON
WILKINS, RICHMOND, & MAGNOLIA





GIANT TRADESCANTIA
PURPLE HEART



LANDSCAPE BULL ROCK
BETWEEN VEGETATION



LANTANA URTICOIDES
TEXAS LANTANA



EXISTING TYPICAL SECTION SL 274

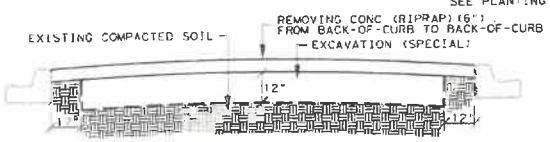

PROPOSED TYPICAL SECTION SL 274

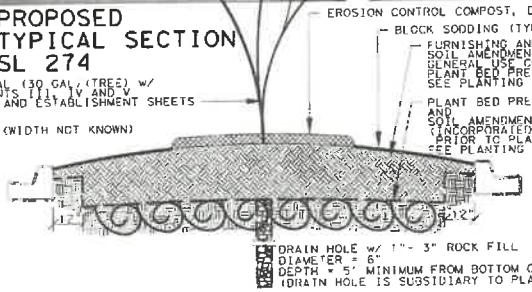

REGISTERED LANDSCAPE ARCHITECT
DANA DEAN COTE'
1791
STATE OF TEXAS

10/22/2018

NTS

CSJ: 0111-13-092

SL 274
SITE LOCATION

SHEET 1 OF 3

Texas Department of Transportation

DIV. NO.	PROJECT NO.		SHEET NO.
6			26
STATE	DIST.	COUNTY	
TEXAS	HOU	BRAZORIA	
CONT.	SECT.	JOB	HIGHWAY NO.
0111	09	043, etc	BS 2665, etc



* PC (Point-of-Curvature) - where straight curb ends and curve begins.

NTS

CSJ: 0111-09-043

BS 288B
SITE LOCATION

SHEET 2 OF 2

Texas Department of Transportation

DIST. COORD. NO.	PROJECT NO.	SHEET NO.
6		25

STATE	DIST.	COUNTY
TEXAS	HOU	BRAZORIA

CONT.	SECT.	JOB	HIGHWAY NO.
0111	09	043,etc	BS 288B, etc

REGISTERED LANDSCAPE ARCHITECT
DANA DEAN COTE'
1791
STATE OF TEXAS

10/22/2018



NTS

CSJ: 0111-13-002

SL 274
SITE LOCATION

SHEET 3 OF 3

Texas Department of Transportation

DIST.	COUNTY	SHEET NO.
6		28
STATE	DIST.	COUNTY
TEXAS	HOU	BRAZORIA
CONT.	SECT.	JOB
0111	09	043 etc

REGISTERED LANDSCAPE ARCHITECT
DANA DEAN COTE'
1791
STATE OF TEXAS

10/22/2018

SH288 and 274 Loop Reforestation



Key

Canopy tree

Understory tree

WILKINS AND 274 LOOP



CR 44 and 274 Loop



274 LOOP FROM HWY35 TO PLUM

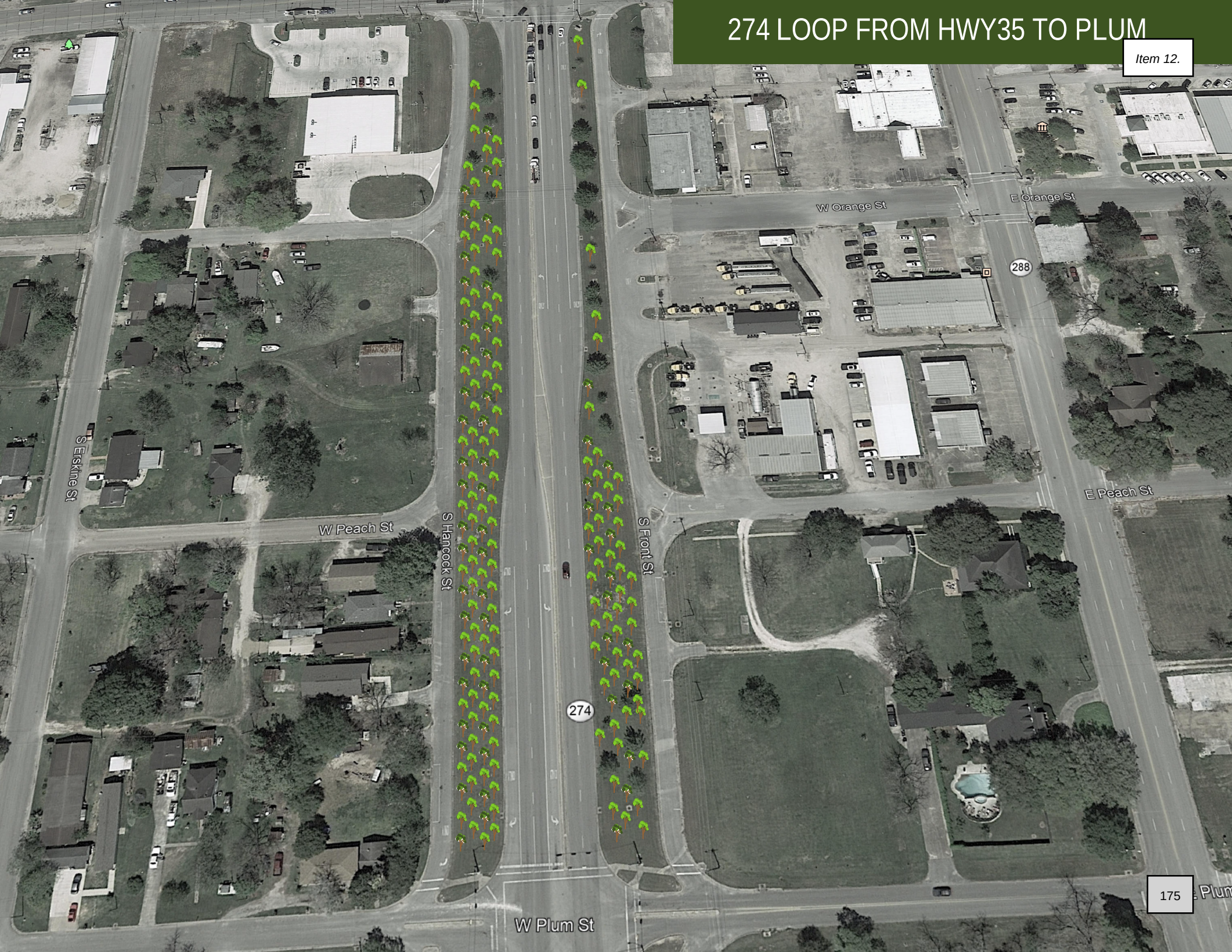

274 LOOP FROM PLUM TOMUNSON

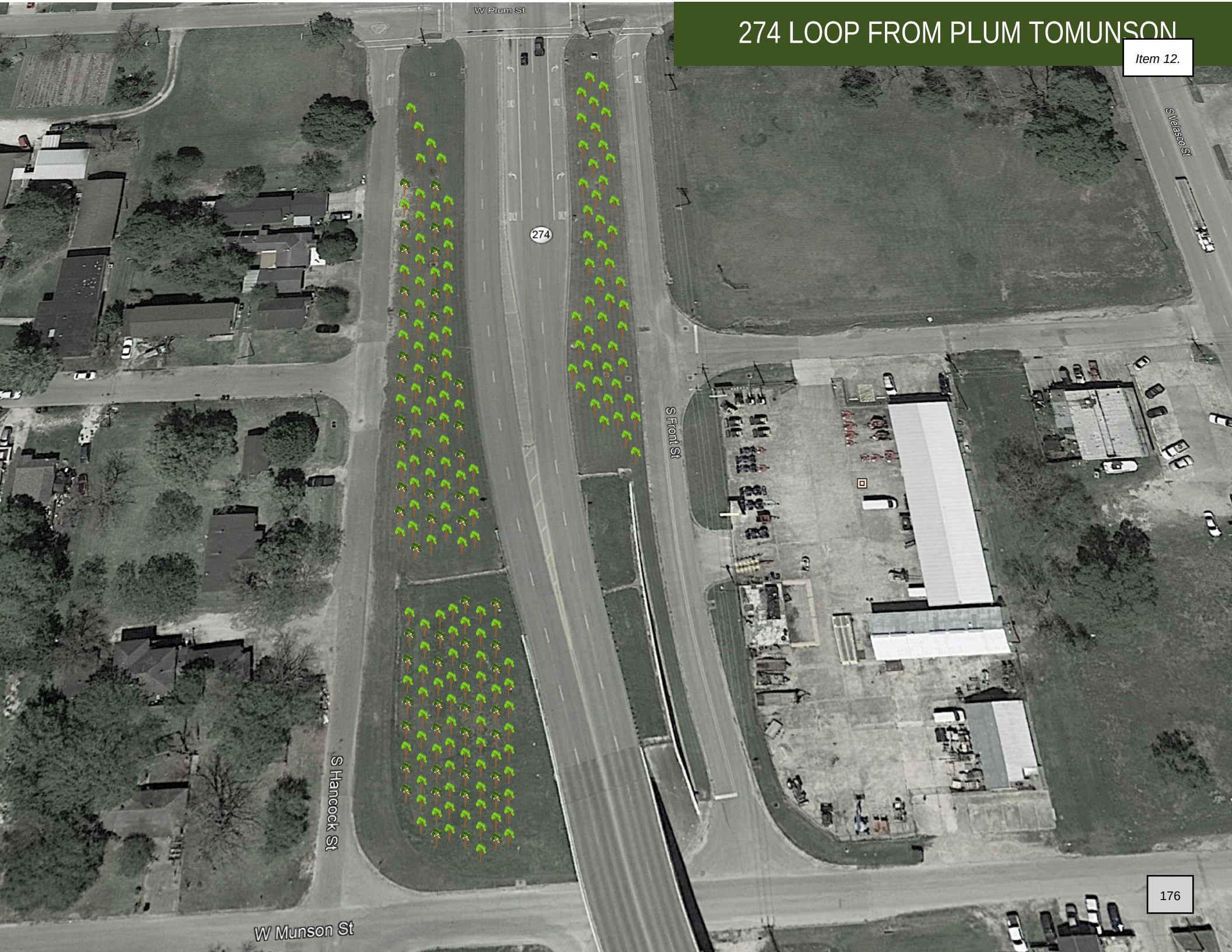



CR 523 FROM SH288 TO HWY35




Hwy 35 Bypass
523


523
Hwy 35 Bypas


523

SH288 FROM CR220 TO FM 523




Jimmy Phillips Blvd
288
35
609
28



THE HEART OF BRAZORIA COUNTY ANGLETON

AGENDA ITEM SUMMARY FORM

MEETING DATE: 10/18/2021

PREPARED BY: Megan Mainer, Director of Parks & Recreation

AGENDA CONTENT: Discussion and possible action on future park development.

AGENDA ITEM SECTION: Regular Agenda

BUDGETED AMOUNT: NA **FUNDS REQUESTED:** NA

FUND: NA

EXECUTIVE SUMMARY:

Staff is moving forward with various action items within the Comprehensive Parks and Recreation Master and Strategic plan including addressing low scoring park components, increase programming and revenue, as well as renovating substandard facilities. Some of the parks in need of attention are the Municipal Pool, Reuben Welch Park, Veterans Park, Officer Cash Memorial Dog Park, and the Angleton Recreation Center.

Staff prepared and presented a presentation to the Parks & Recreation Board on June 14 and the following input was given:

- Municipal Pool – Install a large (epic) splash pad along with a playground unit. Ensure shade structures are present for rental income. Expand the park to other adjacent property and possibly include a dog park in the same area.
- Veterans Park – Designate a space for food trucks, develop a pavilion that is functional as well as a piece of art downtown, ensure the stage is covered, combine lower right and center pavilions as a potential solution, and need ample seating.
- Reuben Welch Park – Due to utility constraints, consider other opportunities other than a BMX/bike pump course that doesn't require large restroom facilities. Staff will come back with alternative options.
- Officer Cash Memorial Dog Park – Consider an alternate location for the dog park so it can be expanded and provide ample space for large dog areas. Reference dog park standards for space requirements as well as sizes of parks in other communities. If the dog park is relocated, redevelop the space off of Kiber as a residential park accessible to residents on the south side of town.

- Angleton Recreation Center – Include outdoor sunbathing seating and additional water features, add a loop trail, consider reworking the existing party pad, and revitalize the plaza for additional rental income.

Additionally, the Parks & Recreation Board requested a survey be developed for community feedback revolved around park development on the south side of town, municipal pool site land use, Veterans Park redevelopment, and Officer Cash Memorial Park redevelopment. A survey was developed and posted from September 3 to September 30. The results are enclosed.

In summary, 79 people took the survey and survey results are enclosed in the agenda packet for review and discussion.

Park on the South Side of Town

- Most individuals would use this park for walking, exercise, play, family activities, biking, and playground and splash pad use
- Most individuals think citizens of all ages would use the park
- Top five park amenities desired are a playground for (5-12), trails, splash pad, playground (2-5), and swings
- If there was sidewalk connectivity, individuals would most likely bike or walk
- If there was not sidewalk connectivity, individuals would most likely drive a car
- The Park would be used most likely on the weekend or during the week at various times
- 78% of respondents would like a splash pad at this park

Municipal Pool Site

- A majority of respondents would like to see this site used for park development
- Top three park amenity ideas include splash pad, playground (5-12), and playground (2-5)
- 74% of respondents are in favor of this site being a special use park for something like a skate park
- A majority of respondents are not in favor of selling this property
- If there was sidewalk connectivity, individuals would most likely bike or walk

Veterans Park Redevelopment

- Respondents would like to see the park used for food trucks, concerts, events, family activities, and picnics
- The Park would be used most likely on the weekend or during the week at various times
- 82% of respondents are more likely to use the park if ample seating was provided

Officer Cash Memorial Dog Park Redevelopment

- 75% of 59 respondents were dog owners
- Size of a dog park ranged from 1-5 acres
- 83% of 55 respondents prefer large and small dogs to be separated

- The top five dog park amenities included shade, dog drinking fountains, walking trail, wash stations, and an interactive water feature
- Preference for a stand-alone dog park and dog park incorporated into a larger park was nearly split 50.00% to 49.12% accordingly
- Monday is the preferred closure day for dog park maintenance

On August 9, 2021, staff presented an idea of advertising a public private Request for Proposals for Reuben Welch Park. The Parks & Recreation Board noted they would like this park to be a more passive and natural park but agreed to advertise a public private Request for Proposals to consider all options. Staff is currently working on the RFP which will be advertised this fall.

On Monday, October 11, 2021, the Parks & Recreation Board noted they wanted sidewalk connectivity to a south side park development and would like design to include a trail and splash pad. Also, the Parks & Recreation Board noted they would be willing to sell the current municipal pool site to help fund a future land purchase or use the site for future city infrastructure. Additionally, the Parks & Recreation Board noted they would like to see Veterans Park developed with preliminary amenities discussed. Finally, the Parks & Recreation board requested additional research be done to determine the appropriate side of the park, if it's a standalone park, and what type of amenities are typically found in other municipal dog parks.

RECOMMENDATION:

Staff recommends ABLC provide direction park development on the south side of town, municipal pool site land use, Veterans Park redevelopment, and Officer Cash Memorial Park redevelopment.

Q1 How would you like to use this park?

Answered: 78 Skipped: 1

#	RESPONSES	DATE
1	Kids play	9/30/2021 3:44 PM
2	Walking/jogging, picnic area, recreational water to cool down In summer time.	9/30/2021 2:59 PM
3	family play outdoor exercise	9/30/2021 2:24 PM
4	Recreational	9/30/2021 1:26 PM
5	Exercise	9/30/2021 12:23 PM
6	Walk	9/30/2021 12:22 PM
7	Walking if covered. To take my grandkids to a great outdoor playground as well as picnics	9/30/2021 12:07 PM
8	Family park with jogging/ biking trails.	9/30/2021 10:57 AM
9	I will like to take my dogs and do my daily exercises.	9/30/2021 10:44 AM
10	My comments are for what I believe residents in this part of town should have, not necessarily what I would use. With the removal of the City Pool years ago, I would recommend a water feature on the Southside of town. The residents in the closest proximity to this new park need access to walk or bike to a water amenity as it is too far to walk or bike to the Recreation Center.	9/30/2021 10:41 AM
11	To get my kiddos outside to play	9/30/2021 10:03 AM
12	Splash pad	9/30/2021 8:51 AM
13	To exercise and play with my kids	9/30/2021 8:04 AM
14	Splash pad	9/30/2021 7:34 AM
15	Yes , but we won't if a splash pad it built . Nope	9/30/2021 7:34 AM
16	More family time. Southside Angleton doesn't even have sidewalks!! What a wonderful addition!	9/30/2021 7:31 AM
17	Exercise, sports, walking dog. If there was water then fishing.	9/30/2021 6:56 AM
18	Daily use for my kids, possibly birthday parties	9/30/2021 6:14 AM
19	For exercise. Walking and playground	9/30/2021 5:58 AM
20	If a catch and release.fishing was.available.woipd.take my kids there	9/30/2021 5:44 AM
21	Place for kids to play around outdoors, maybe a place to gather for birthday parties.	9/30/2021 5:41 AM
22	Family friendly	9/30/2021 4:55 AM
23	For fun	9/30/2021 3:44 AM
24	Family	9/30/2021 12:22 AM
25	Picnic, walking, playground for kids	9/29/2021 11:53 PM
26	I have a one and two year old that absolutely love parks. We would be there often.	9/29/2021 11:36 PM
27	Relaxation, outdoor activities for children	9/29/2021 11:14 PM
28	To walk/jog a loop at least 1mile long	9/29/2021 10:40 PM
29	Children's playground.	9/29/2021 9:54 PM
30	Splash pad for kids	9/29/2021 8:36 PM

31	With my son and family	9/29/2021 8:20 PM
32	Bike riding. Walking trails. Kids water park, swimming pool, kids playground	9/29/2021 7:53 PM
33	Parkour, skateboarding	9/29/2021 7:45 PM
34	Walking	9/29/2021 6:37 PM
35	Walking, children playing, family picnics	9/29/2021 6:15 PM
36	With my kids for a family day	9/29/2021 4:37 PM
37	Exercise	9/8/2021 3:47 AM
38	Dog walk, picnic, beach volleyball	9/6/2021 12:31 AM
39	None unless there's a splash pad	9/5/2021 11:21 PM
40	Family gatherings, casual picnics	9/5/2021 9:48 PM
41	Recreation Exercise	9/5/2021 10:03 AM
42	I think a good park is fun for all ages with a variety of things to do.	9/5/2021 9:25 AM
43	Walking, kids play on play equipment	9/5/2021 9:11 AM
44	Running, children’s recreation	9/4/2021 7:19 PM
45	For children to have a place to play and adults to have an area to walk for exercise	9/4/2021 12:52 PM
46	Family use---playground, picnics, etc. Not another ballfield.	9/4/2021 12:04 PM
47	Exercise, dog walking, biking, splash pad, playground, basketball	9/4/2021 11:40 AM
48	Play area for kids and a place to exercise for adults	9/4/2021 9:12 AM
49	Outdoor exercise equipment, play structure	9/4/2021 8:33 AM
50	Family get-togethers, exercise, children’s recreation, relaxation.	9/4/2021 7:50 AM
51	For my children to play	9/4/2021 7:32 AM
52	I would use this park as a place for my family to go to play and spend time together outside.	9/4/2021 7:19 AM
53	Play and exercise	9/4/2021 5:17 AM
54	Walking	9/4/2021 3:15 AM
55	Children, adults, walking	9/4/2021 1:06 AM
56	Bike trails for kids to ride on or walking trails both to encourage exercise	9/3/2021 11:56 PM
57	To take my grandkids to play!	9/3/2021 10:59 PM
58	Walking and relaxing at	9/3/2021 10:58 PM
59	Splash pad	9/3/2021 10:40 PM
60	Children’s playgrounds and walking track.	9/3/2021 7:44 PM
61	Walking trail, splash area, basketball courts	9/3/2021 7:32 PM
62	Family activities/sports complex	9/3/2021 7:29 PM
63	Plash pad and playground	9/3/2021 7:26 PM
64	Playground	9/3/2021 7:09 PM
65	Yes	9/3/2021 6:59 PM
66	Splash pad, playground, track (if it has it)	9/3/2021 6:00 PM
67	To ride bikes , bring my youth group to play volleyball, have my kids play on the play ground	9/3/2021 5:41 PM
68	Walking	9/3/2021 5:30 PM

69	Walking trail	9/3/2021 5:19 P...
70	Do fun things with my kids	9/3/2021 5:13 PM
71	Inclusive for disabled people. Look up magical bridge parks in California. Hands down the best most inclusive awesome parks I've ever seen.	9/3/2021 4:50 PM
72	Walking, picnicking,	9/3/2021 4:43 PM
73	Splash pad, playground	9/3/2021 4:40 PM
74	For a Funtime with family	9/3/2021 4:23 PM
75	Not at all not necessary	9/3/2021 3:49 PM
76	Develop with various amenities that will serve residents on the south side of town so they don't have to travel.	9/3/2021 3:22 PM
77	Exercise and play time for children.	9/3/2021 3:21 PM
78	Kids playing, fitness trail, possible water feature	9/3/2021 3:18 PM

Q1 How would you like to use this park?



Q2 Why would you use this park?

Answered: 77 Skipped: 2

#	RESPONSES	DATE
1	Kids	9/30/2021 3:44 PM
2	South side is closer to home.	9/30/2021 2:59 PM
3	close convenient	9/30/2021 2:24 PM
4	For the kids to play an burn off energy	9/30/2021 1:26 PM
5	Safer scenery, possible trails	9/30/2021 12:23 PM
6	Close to home	9/30/2021 12:22 PM
7	To be able to get out of the house and give the grandkids out of the house for fresh air	9/30/2021 12:07 PM
8	South side of Angleton is quite nice. So, a change in scenery is a perk.	9/30/2021 10:57 AM
9	To do my daily exercise and my dog do to his daily exercises	9/30/2021 10:44 AM
10	Southside amenities should stand out. The southside residents need and deserve something that sets their park apart from others. Considerations: Rentable pavilion for parties, water feature, inclusive playground, shade, and walking path on the perimeter.	9/30/2021 10:41 AM
11	To let the kids run off energy	9/30/2021 10:03 AM
12	For my son	9/30/2021 8:51 AM
13	New or maybe better amenities	9/30/2021 8:04 AM
14	Closer to home	9/30/2021 7:34 AM
15	Well if it has a playground the kids could play on it .	9/30/2021 7:34 AM
16	Walk...take grankiddos...sit and enjoy.	9/30/2021 7:31 AM
17	See above	9/30/2021 6:56 AM
18	Two young kids, I live in the area	9/30/2021 6:14 AM
19	This park has a walking path around the playground.	9/30/2021 5:58 AM
20	Family outing	9/30/2021 5:44 AM
21	Grandkids, party, concerts.	9/30/2021 5:41 AM
22	To relax	9/30/2021 4:55 AM
23	Family time	9/30/2021 3:44 AM
24	Town park	9/30/2021 12:22 AM
25	Closer to home	9/29/2021 11:53 PM
26	So my children could enjoy themselves.	9/29/2021 11:36 PM
27	Enjoying with family gatherings	9/29/2021 11:14 PM
28	To walk outdoors and have picnics with family. Splash pad is an excellent idea. If they had tennis and basketball courts we could play with other people there	9/29/2021 10:40 PM
29	Socialize and play outdoors.	9/29/2021 9:54 PM
30	Because it will give the kids some time outdoors summer and birthday parties	9/29/2021 8:36 PM
31	Free or inexpensive entertainment outside of the house	9/29/2021 8:20 PM

32	Because there is no where to go thats modern and big	9/29/2021 7:53 PM
33	Safe	9/29/2021 7:45 PM
34	Location	9/29/2021 6:37 PM
35	It would be close to me	9/29/2021 6:15 PM
36	Because my kids loves parks	9/29/2021 4:37 PM
37	A nicer park, with plenty of trees and shade. Running paths, if included.	9/8/2021 3:47 AM
38	Family fun	9/6/2021 12:31 AM
39	I wouldn't have lived on the north side unless there's a splash pad	9/5/2021 11:21 PM
40	Location and amenities.	9/5/2021 9:48 PM
41	Safer than walking or running by the road, and it’s a great place for friends to gather.	9/5/2021 10:03 AM
42	To ride our class 2 ebikes, & to take the grandkids to a playground & hopefully a splash pad. A lot of trees & shade would also be nice. It gets awfully hot.	9/5/2021 9:25 AM
43	For a better place to walk	9/5/2021 9:11 AM
44	I run daily and have kids who like to play outside	9/4/2021 7:19 PM
45	It would be close to my residence	9/4/2021 12:52 PM
46	Providing a safe, clean place to take my child.	9/4/2021 12:04 PM
47	Outdoor fitness, and outdoor play space and gathering place (bbq, outdoor picnics or bday parties, etc)	9/4/2021 11:40 AM
48	To let my kids play while I exercise	9/4/2021 9:12 AM
49	Good playground, shade features, location	9/4/2021 8:33 AM
50	Parks are great for seeing friends, relaxation, exercise, and all happening in a beautiful area.	9/4/2021 7:50 AM
51	Kids	9/4/2021 7:32 AM
52	I love having safe places to take my children so they can play outside.	9/4/2021 7:19 AM
53	Close to home	9/4/2021 5:17 AM
54	walking, recreation	9/4/2021 3:15 AM
55	Entertainment, fitness	9/4/2021 1:06 AM
56	Exercise in a free and safe place and not on the street	9/3/2021 11:56 PM
57	For entertainment	9/3/2021 10:59 PM
58	Something different. New space to explore.	9/3/2021 10:58 PM
59	Splash pad and ride bikes	9/3/2021 10:40 PM
60	Allow my kids and myself fresh air and exercise	9/3/2021 7:44 PM
61	Family fun and exercise	9/3/2021 7:32 PM
62	For my children under 10	9/3/2021 7:26 PM
63	Kids	9/3/2021 7:09 PM
64	I have a child	9/3/2021 6:59 PM
65	I teach on this side of town. It would be nice to have a park (that is nice) on this side of town.	9/3/2021 6:00 PM
66	Fun	9/3/2021 5:41 PM
67	Walking in the shade	9/3/2021 5:30 PM
68	Need for additional walking and biking spaces on Southside of town	9/3/2021 5:19 PM

69	To enjoy family time	9/3/2021 5:13 P...
70	Special needs kids need accessibility. Autism, sensory disorders need different things than most parks around here offer.	9/3/2021 4:50 PM
71	Because it’s an available outdoor space	9/3/2021 4:43 PM
72	Family fun	9/3/2021 4:40 PM
73	To make new memories with the kiddos	9/3/2021 4:23 PM
74	Wouldn’t	9/3/2021 3:49 PM
75	To engage in recreational and leisure activities	9/3/2021 3:22 PM
76	Get out of the house.	9/3/2021 3:21 PM
77	To get kid’s energy out and to get excercise in	9/3/2021 3:18 PM

Q2 Why would you use this park?



Q3 Who do you think would use this park?

Answered: 78 Skipped: 1

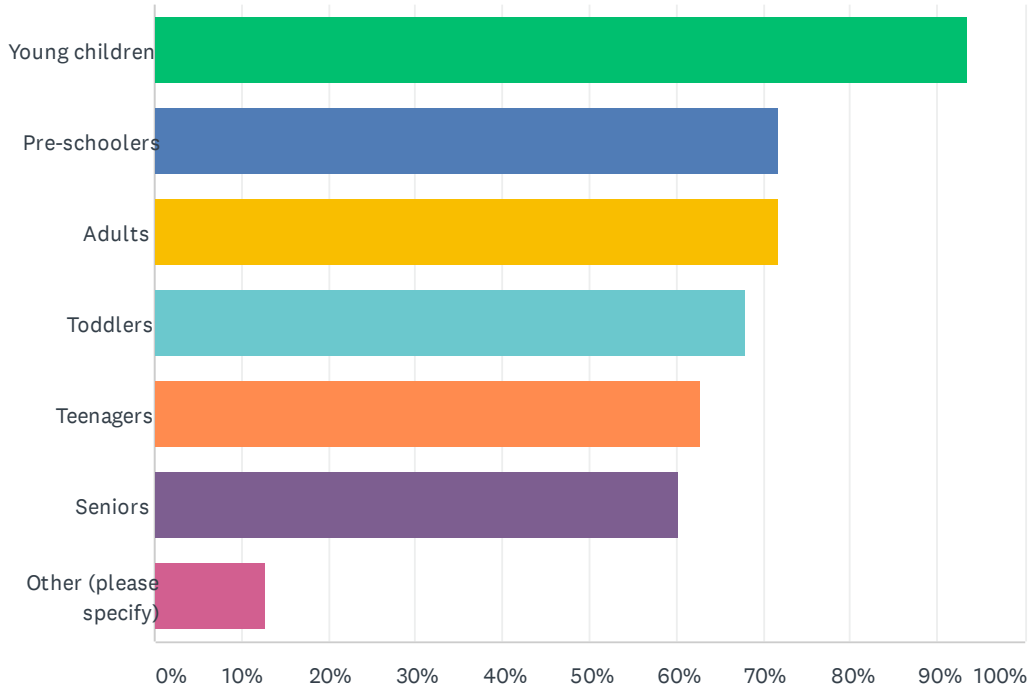

ANSWER CHOICES	RESPONSES	
Young children	93.59%	73
Pre-schoolers	71.79%	56
Adults	71.79%	56
Toddlers	67.95%	53
Teenagers	62.82%	49
Seniors	60.26%	47
Other (please specify)	12.82%	10
Total Respondents: 78		

#	OTHER (PLEASE SPECIFY)	DATE
1	Groups	9/30/2021 12:07 PM
2	Families for Parties	9/30/2021 10:41 AM
3	Our special needs adult day has group.	9/30/2021 7:34 AM
4	Eveyone... the entire family	9/30/2021 7:31 AM
5	Dogs	9/29/2021 11:53 PM
6	It depends on facilities	9/5/2021 11:21 PM
7	Handicapped	9/4/2021 12:52 PM
8	Dogs on leash	9/4/2021 11:40 AM

9	Dogs	9/3/2021 11:56 PM
10	Drug dealers and prostitues	9/3/2021 3:49 PM

Q4 Please select the top five park amenities you would like to have in a park on the south side of town?

Answered: 79 Skipped: 0

FUTURE PARK DEVELOPMENT

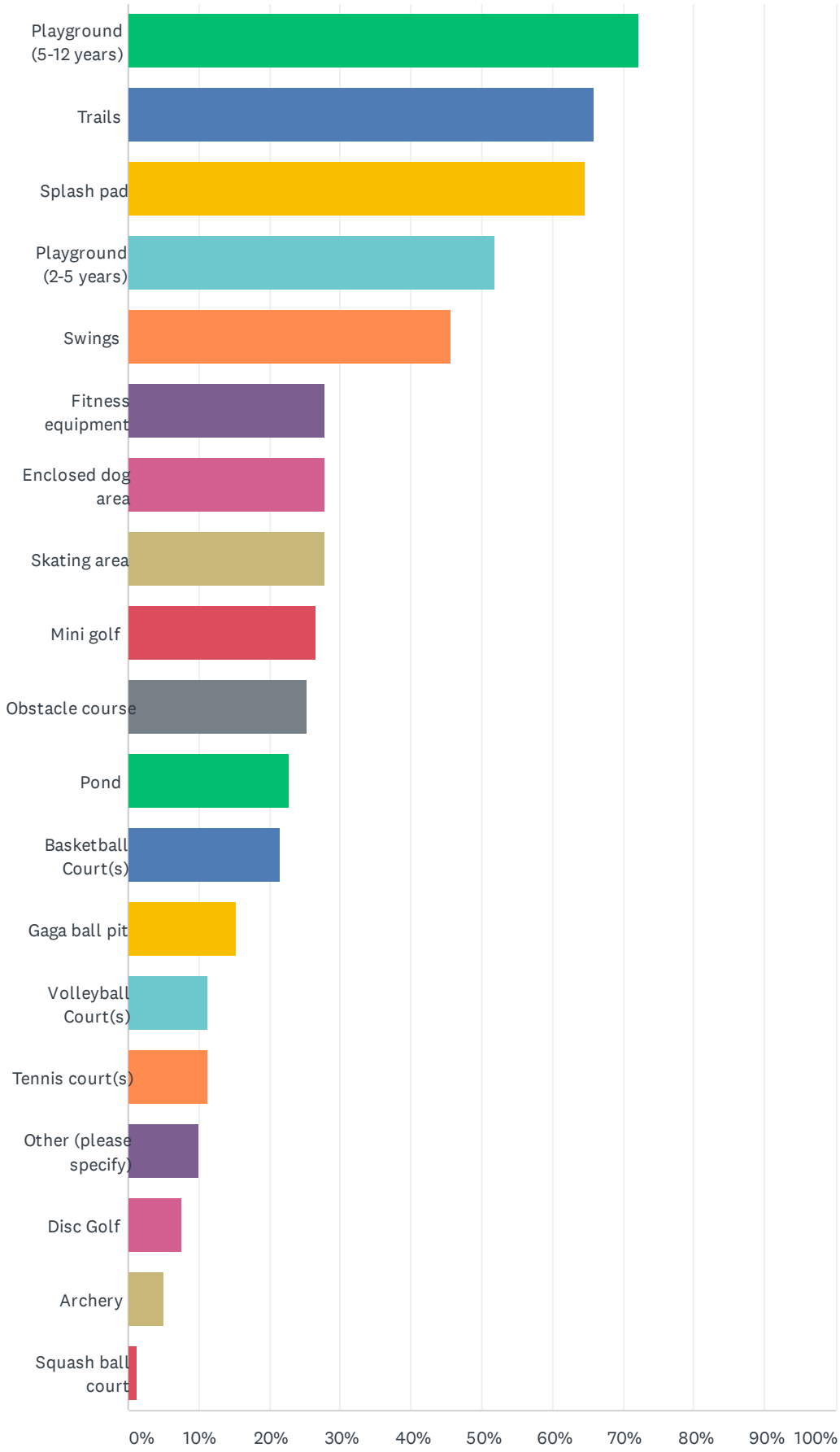

ANSWER CHOICES	RESPONSES	
Playground (5-12 years)	72.15%	57
Trails	65.82%	52
Splash pad	64.56%	51
Playground (2-5 years)	51.90%	41
Swings	45.57%	36
Fitness equipment	27.85%	22
Enclosed dog area	27.85%	22
Skating area	27.85%	22
Mini golf	26.58%	21
Obstacle course	25.32%	20
Pond	22.78%	18
Basketball Court(s)	21.52%	17
Gaga ball pit	15.19%	12
Volleyball Court(s)	11.39%	9
Tennis court(s)	11.39%	9
Other (please specify)	10.13%	8
Disc Golf	7.59%	6
Archery	5.06%	4
Squash ball court	1.27%	1
Total Respondents: 79		

#	OTHER (PLEASE SPECIFY)	DATE
1	Rentable Pavilion	9/30/2021 10:41 AM
2	A walking path	9/30/2021 7:34 AM
3	Something for older kids to do to do. There is nothing in this town for teens to do . Why not get surveys from kids ,teens ?	9/30/2021 7:34 AM
4	Lots of benches for the retired. Get the older generation out there!!	9/30/2021 7:31 AM
5	Bicycling	9/29/2021 11:14 PM
6	Picnic area	9/5/2021 10:03 AM
7	Special needs equipment	9/3/2021 4:50 PM
8	Not needed	9/3/2021 3:49 PM

Q5 If there was sidewalk connectivity to this park, what mode of transportation would you use to get to the park?

Answered: 78 Skipped: 1

#	RESPONSES	DATE
1	Bicycle or walk	9/30/2021 3:44 PM
2	Walking based on the distance, or by car.	9/30/2021 2:59 PM
3	personal vehicle	9/30/2021 2:24 PM
4	Walking or bicycle	9/30/2021 1:26 PM
5	Walking, bikes	9/30/2021 12:23 PM
6	Car	9/30/2021 12:22 PM
7	Car	9/30/2021 12:07 PM
8	Bike.	9/30/2021 10:57 AM
9	Vehicle	9/30/2021 10:48 AM
10	I will use my car	9/30/2021 10:44 AM
11	I would assume bike or walk	9/30/2021 10:41 AM
12	Drive	9/30/2021 10:03 AM
13	Car	9/30/2021 8:51 AM
14	Walk or bike	9/30/2021 8:04 AM
15	Walk	9/30/2021 7:34 AM
16	Depends on where it is . That is another problem.This town doesn't have a good place to ride bikes . Besides the boring trail at the park by the junior high .	9/30/2021 7:34 AM
17	Walk as much as possible.	9/30/2021 7:31 AM
18	Bike, run, walk	9/30/2021 6:56 AM
19	Walking, car	9/30/2021 6:14 AM
20	Car	9/30/2021 5:58 AM
21	Car	9/30/2021 5:41 AM
22	Walk	9/30/2021 4:55 AM
23	Car	9/30/2021 3:44 AM
24	All	9/30/2021 12:22 AM
25	Walk or bike	9/29/2021 11:53 PM
26	I would walk and push my kids in a stroller	9/29/2021 11:36 PM
27	Bicycles	9/29/2021 11:14 PM
28	It would be an excellent idea to have parks connected with a sidewalk system so people could walk or bike ride to all parks.	9/29/2021 10:40 PM
29	Walking	9/29/2021 9:54 PM
30	Bike	9/29/2021 8:36 PM

31	Bicycle or golf cart	9/29/2021 8:20 PM
32	Bike	9/29/2021 7:53 PM
33	Car	9/29/2021 7:45 PM
34	Car	9/29/2021 6:37 PM
35	Walking or riding bikes if close enough	9/29/2021 6:15 PM
36	Bike	9/29/2021 4:37 PM
37	Foot if close enough otherwise car	9/8/2021 3:47 AM
38	Drive	9/6/2021 12:31 AM
39	Drive	9/5/2021 11:21 PM
40	Car	9/5/2021 9:48 PM
41	Bike	9/5/2021 10:03 AM
42	Our ebikes.	9/5/2021 9:25 AM
43	Walk or bike	9/5/2021 9:11 AM
44	Bike	9/4/2021 7:19 PM
45	Vehicle because there are no sidewalks near my residence to walk or bike	9/4/2021 12:52 PM
46	Depending on location, walk or car	9/4/2021 12:04 PM
47	Biking, roller skates, push scooter, walking/running from parking lot	9/4/2021 11:40 AM
48	Bicycle	9/4/2021 9:12 AM
49	Car	9/4/2021 8:33 AM
50	If the park is near my neighborhood, I would walk or bike, depending on if it can be safely done. If not, then in the car.	9/4/2021 7:50 AM
51	Walk	9/4/2021 7:32 AM
52	Walk, ride bikes, or drive	9/4/2021 7:19 AM
53	Bike or drive	9/4/2021 5:17 AM
54	car	9/4/2021 3:15 AM
55	Walkibg	9/4/2021 1:06 AM
56	Bike or walk	9/3/2021 11:56 PM
57	Car	9/3/2021 10:59 PM
58	Car	9/3/2021 10:58 PM
59	Bike	9/3/2021 10:40 PM
60	Walking	9/3/2021 7:44 PM
61	Car	9/3/2021 7:32 PM
62	Personal vehicle	9/3/2021 7:29 PM
63	Car	9/3/2021 7:26 PM
64	Bicycle or walk.	9/3/2021 7:09 PM
65	Car	9/3/2021 6:59 PM
66	Car	9/3/2021 6:00 PM
67	Bike	9/3/2021 5:41 PM
68	My car, I’m on north side	9/3/2021 5:30 PM

69	Walk or bike	9/3/2021 5:19 PM
70	Bike / walk	9/3/2021 5:13 PM
71	Walking, wheelchair	9/3/2021 4:50 PM
72	Walking, biking, car	9/3/2021 4:43 PM
73	Walk	9/3/2021 4:40 PM
74	Walking or bike	9/3/2021 4:23 PM
75	None	9/3/2021 3:49 PM
76	Walk	9/3/2021 3:22 PM
77	Walking	9/3/2021 3:21 PM
78	Car	9/3/2021 3:18 PM

Q5 If there was sidewalk connectivity to this park, what mode of transportation would you use to get to the park?



Q6 If there was no sidewalk connectivity to this park, what mode of transportation would you use to get to the park?

Answered: 79 Skipped: 0

#	RESPONSES	DATE
1	I wouldn’t go	9/30/2021 3:44 PM
2	Car.	9/30/2021 2:59 PM
3	personal vehicle	9/30/2021 2:24 PM
4	Car	9/30/2021 1:26 PM
5	Car	9/30/2021 12:23 PM
6	Car	9/30/2021 12:22 PM
7	We might not be able to go. I fall easily and use a cane, so the sidewalk is a necessity	9/30/2021 12:07 PM
8	Car	9/30/2021 10:57 AM
9	Vehicle	9/30/2021 10:48 AM
10	I will use my car	9/30/2021 10:44 AM
11	There should be connectivity to the park. Sidewalks are a must.	9/30/2021 10:41 AM
12	Drive	9/30/2021 10:03 AM
13	Car	9/30/2021 8:51 AM
14	Walk	9/30/2021 8:04 AM
15	Drive	9/30/2021 7:34 AM
16	Vehicle obviously	9/30/2021 7:34 AM
17	Depending in how close it would be to me and traffic alike or car. If you dont have sidewalks only 2 lane roads in the area you live in it's really unsafe to walk or ride a bike.	9/30/2021 7:31 AM
18	Drive or bike	9/30/2021 6:56 AM
19	Car	9/30/2021 6:14 AM
20	Car	9/30/2021 5:58 AM
21	Vehicle	9/30/2021 5:44 AM
22	Bike	9/30/2021 5:41 AM
23	Drive	9/30/2021 4:55 AM
24	Car	9/30/2021 3:44 AM
25	Car bus etc	9/30/2021 12:22 AM
26	Car or bike	9/29/2021 11:53 PM
27	I would walk and push my kids in a wagon	9/29/2021 11:36 PM
28	Parking for vehicles	9/29/2021 11:14 PM
29	Drive my car	9/29/2021 10:40 PM
30	Car	9/29/2021 9:54 PM
31	Vehicle	9/29/2021 8:36 PM

32	Car	9/29/2021 8:20 PM
33	Car	9/29/2021 7:53 PM
34	Car	9/29/2021 7:45 PM
35	Car	9/29/2021 6:37 PM
36	Same if close enough, car if not	9/29/2021 6:15 PM
37	Car	9/29/2021 4:37 PM
38	Car	9/8/2021 3:47 AM
39	Drive	9/6/2021 12:31 AM
40	Drive	9/5/2021 11:21 PM
41	Car	9/5/2021 9:48 PM
42	Car	9/5/2021 10:03 AM
43	Our ebikes.	9/5/2021 9:25 AM
44	Car	9/5/2021 9:11 AM
45	Drive	9/4/2021 7:19 PM
46	Vehicle	9/4/2021 12:52 PM
47	Car	9/4/2021 12:04 PM
48	Walking from parking lot	9/4/2021 11:40 AM
49	Car	9/4/2021 9:12 AM
50	Car	9/4/2021 8:33 AM
51	Drive	9/4/2021 7:50 AM
52	Car	9/4/2021 7:32 AM
53	Drive	9/4/2021 7:19 AM
54	Drive	9/4/2021 5:17 AM
55	car	9/4/2021 3:15 AM
56	Walking	9/4/2021 1:06 AM
57	Car	9/3/2021 11:56 PM
58	Car	9/3/2021 10:59 PM
59	Car	9/3/2021 10:58 PM
60	Car	9/3/2021 10:40 PM
61	Personal vehicle	9/3/2021 7:44 PM
62	Car	9/3/2021 7:32 PM
63	Personal vehicle	9/3/2021 7:29 PM
64	Car	9/3/2021 7:26 PM
65	Car	9/3/2021 7:09 PM
66	Car	9/3/2021 6:59 PM
67	Car	9/3/2021 6:00 PM
68	Car	9/3/2021 5:41 PM
69	My car I’m on north side	9/3/2021 5:30 PM

70	Bike	9/3/2021 5:19 P...
71	Car	9/3/2021 5:13 PM
72	I wouldn't go if all children are not able to access the park	9/3/2021 4:50 PM
73	Csr	9/3/2021 4:43 PM
74	Car	9/3/2021 4:40 PM
75	Car	9/3/2021 4:23 PM
76	None	9/3/2021 3:49 PM
77	Vehicle	9/3/2021 3:22 PM
78	Walking	9/3/2021 3:21 PM
79	Car	9/3/2021 3:18 PM

Q6 If there was no sidewalk connectivity to this park, what mode of transportation would you use to get to the park?



Q7 When would you use the park?

Answered: 79 Skipped: 0

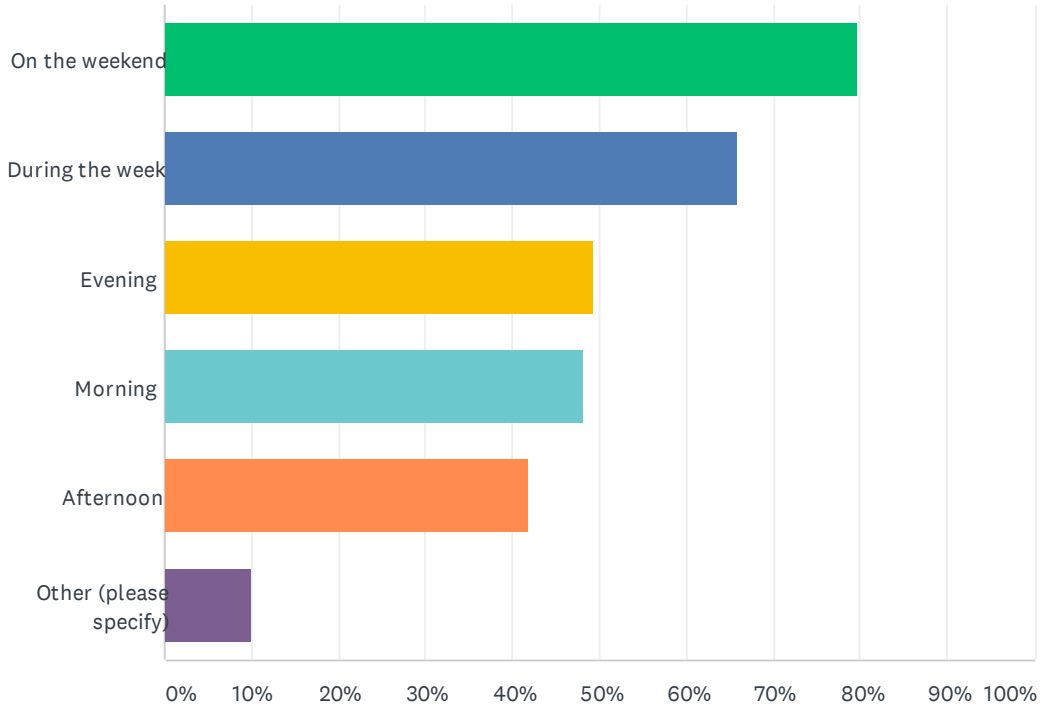

ANSWER CHOICES	RESPONSES	
On the weekend	79.75%	63
During the week	65.82%	52
Evening	49.37%	39
Morning	48.10%	38
Afternoon	41.77%	33
Other (please specify)	10.13%	8
Total Respondents: 79		

#	OTHER (PLEASE SPECIFY)	DATE
1	Walkers might utilize early morning or after work.	9/30/2021 10:41 AM
2	Random	9/30/2021 8:04 AM
3	When it’s not packed with people .	9/30/2021 7:34 AM
4	Depending on time of year	9/29/2021 10:40 PM
5	More during summer	9/4/2021 12:04 PM
6	Birthday parties	9/4/2021 5:17 AM
7	All of the above in season	9/3/2021 10:59 PM
8	Never	9/3/2021 3:49 PM

Q8 Would you be open to a splash pad at this park?

Answered: 79 Skipped: 0

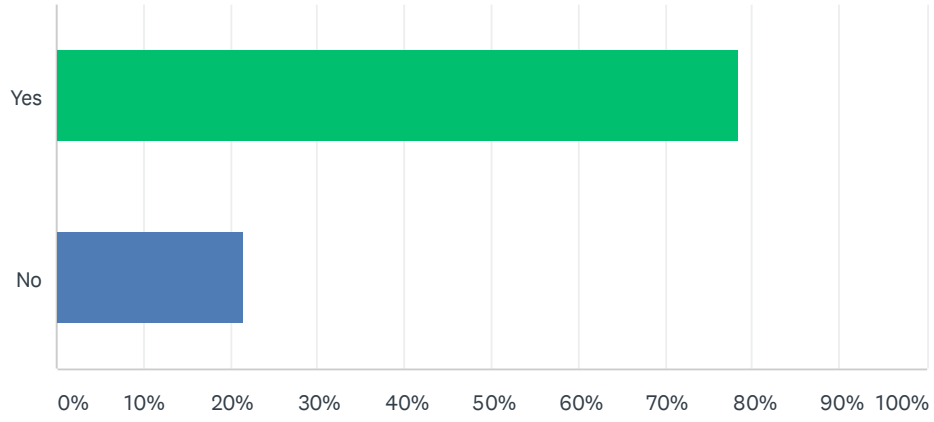

ANSWER CHOICES	RESPONSES	
Yes	78.48%	62
No	21.52%	17
Total Respondents: 79		

Q9 Other comments:

Answered: 41 Skipped: 38

#	RESPONSES	DATE
1	Na	9/30/2021 3:44 PM
2	Trees are a big must, especially in the summer time when the sun is at its highest, walking trails with no shade isn't always the best.	9/30/2021 2:59 PM
3	Splash pad liability very frequently on news due to not monitoring safely/ regularly like suppose to	9/30/2021 12:23 PM
4	Na	9/30/2021 12:22 PM
5	Splash pads can become a liability for the community.	9/30/2021 10:57 AM
6	N/A	9/30/2021 10:44 AM
7	Let's do this right. Think about the demographic of the citizens who would use this park. They too need a safe place to play, cool down, exercise, and gather as a family with the potential of being able to bike or walk to the park. It's time. Thank you for the opportunity to give feedback.	9/30/2021 10:41 AM
8	Apprehensive w splash pad and Amoebas	9/30/2021 8:04 AM
9	Southside need a good park!	9/30/2021 7:34 AM
10	Splash pad is a bad idea .	9/30/2021 7:34 AM
11	This is an amazing addition to our community. Anything added your town just keeps making us better and gives us additional potential for growth!	9/30/2021 7:31 AM
12	None	9/30/2021 6:14 AM
13	No splash pad	9/30/2021 5:58 AM
14	Definitely a splash pad since no pool on that side of town.	9/30/2021 5:41 AM
15	The park would have to be well maintained and closely monitored	9/30/2021 4:55 AM
16	Have better safety for parks	9/30/2021 12:22 AM
17	Splash pads are breeding grounds for bacteria	9/29/2021 11:53 PM
18	Pleaseeeee make a splash pad. We need one so bad. Just hold the brain eating amoebas, please.	9/29/2021 11:36 PM
19	A gravel trail is better on the knees for running/jogging/walking, and preferable a winding 1 mile loop. That way people can log the distance they exercise. As an aside, it would be great to have a bike trail connecting Angleton to the southern Brazoria cities.	9/29/2021 10:40 PM
20	Outdoor swimming pool is needed for everyone from babies to adults	9/29/2021 7:53 PM
21	No splash pad due to recent deaths from brain eating amoeba that has killed young children in our state.	9/29/2021 6:37 PM
22	Thank you for expanding Angleton ❤	9/8/2021 3:47 AM
23	Special needs adult changing table in park restrooms.	9/5/2021 9:48 PM
24	Angleton could use more bike lanes & bike trails. Bicycles (both regular bicycles & ebikes) are gaining popularity, & we need a safe place to ride. Thank you. Also, next to the water fountain, a fountain on the ground for dogs to drink out of would be awesome!	9/5/2021 9:25 AM
25	Lighted running trails are needed	9/4/2021 7:19 PM
26	There is no form of entertainment near the Southside of town	9/4/2021 12:52 PM

27	After what happened with the LJ splash pad, I think you'd be hard-pressed to convince many parents one would be safe.	9/4/2021 12:04 PM
28	A pond and garden area would be great scenery for picnics, reading on benches, attracting butterflies and ducks. Mature trees would be GREAT.	9/4/2021 11:40 AM
29	I would be open to a splash pad; however, nervous about safety and upkeep of it.	9/4/2021 8:33 AM
30	I appreciate the attention this has received. The south side of town has long needed such development in order for residents to remain here and take pride in their homes, as well as feel the same community pride the other parts of town have enjoyed.	9/4/2021 7:50 AM
31	I'm thrilled these improvements are happening	9/4/2021 5:17 AM
32	Lots of SHADE please!	9/3/2021 11:56 PM
33	None	9/3/2021 7:44 PM
34	Na	9/3/2021 7:32 PM
35	Let’s add something the other parks DON’T have! Maybe something other cities parks don’t have in 1 place.	9/3/2021 7:29 PM
36	Lots of trees! All sizes and types please. Lots of beaches around the pond. Thank you!	9/3/2021 5:30 PM
37	Inclusiveness is needed. Please research	9/3/2021 4:50 PM
38	None	9/3/2021 4:43 PM
39	Hopefully it includes something for all ages	9/3/2021 4:23 PM
40	Not what this town needs, it needs existing streets and drainage fixed.	9/3/2021 3:49 PM
41	Shade covering for playground is always appreciated and bathrooms.	9/3/2021 3:18 PM

Q10 How would you like to see this land used?

Answered: 70 Skipped: 9

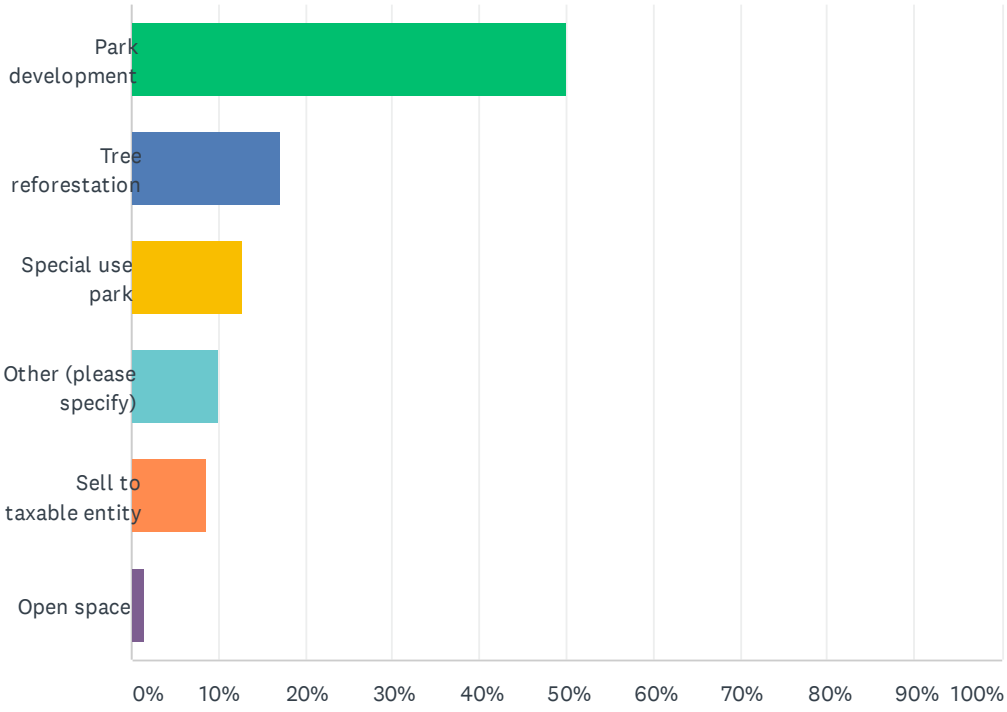

ANSWER CHOICES	RESPONSES	
Park development	50.00%	35
Tree reforestation	17.14%	12
Special use park	12.86%	9
Other (please specify)	10.00%	7
Sell to taxable entity	8.57%	6
Open space	1.43%	1
TOTAL		70

#	OTHER (PLEASE SPECIFY)	DATE
1	Splash pad	9/30/2021 12:13 PM
2	The Animal Adoption Center is a relatively unknown amenity in our area. Relocation with a new facility would improve visibility.	9/30/2021 10:44 AM
3	Not sure since it’s in a odd place	9/30/2021 7:57 AM
4	Splash pad	9/29/2021 9:55 PM
5	Splash pad	9/5/2021 11:24 PM
6	Water related activity	9/3/2021 11:02 PM
7	New pool	9/3/2021 6:02 PM

Q11 If the land was developed into a park, with less than an acre of space for parking and other amenities, please select the top three park amenities you would like to see in this location?

Answered: 68 Skipped: 11

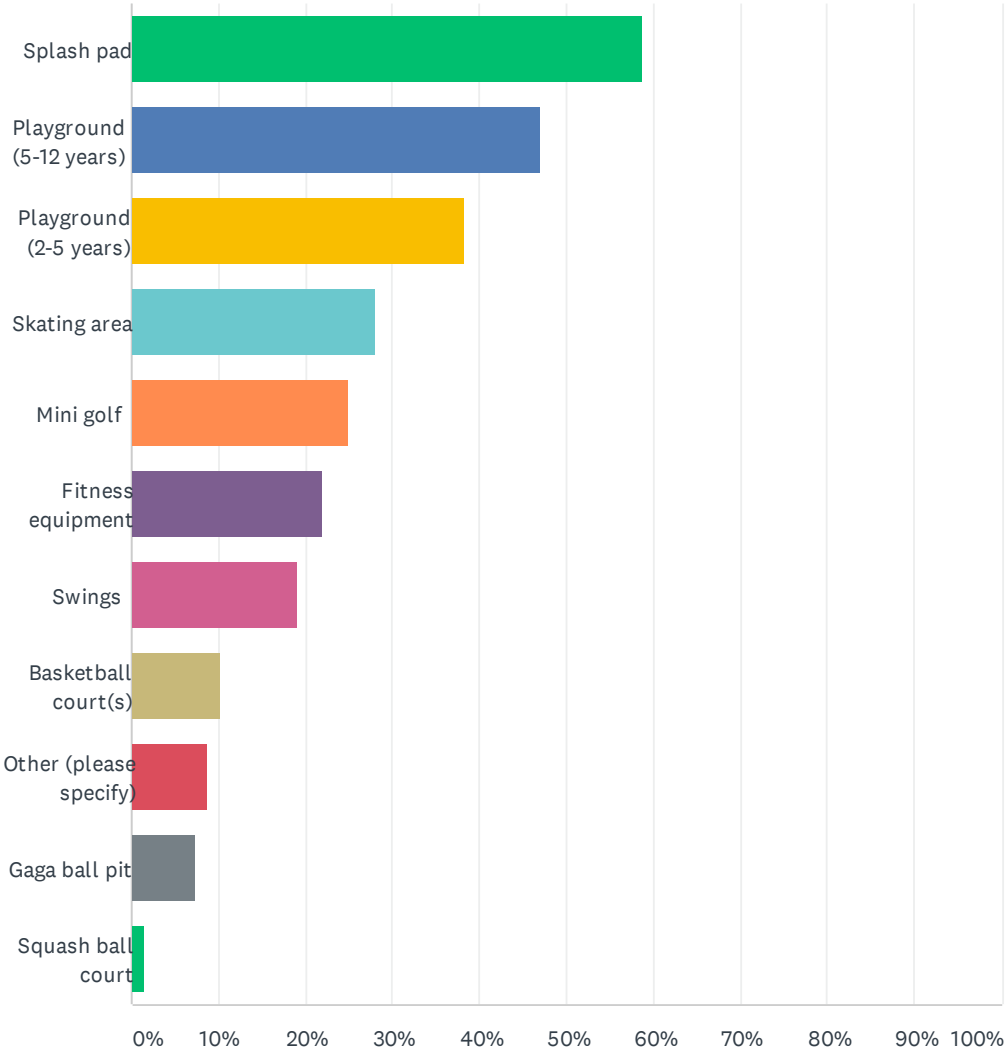

ANSWER CHOICES	RESPONSES	
Splash pad	58.82%	40
Playground (5-12 years)	47.06%	32
Playground (2-5 years)	38.24%	26
Skating area	27.94%	19
Mini golf	25.00%	17
Fitness equipment	22.06%	15
Swings	19.12%	13
Basketball court(s)	10.29%	7
Other (please specify)	8.82%	6
Gaga ball pit	7.35%	5
Squash ball court	1.47%	1
Total Respondents: 68		

#	OTHER (PLEASE SPECIFY)	DATE
1	I would not recommend a park in this location.	9/30/2021 10:44 AM
2	A nice mini golf that remains city owned and maintained would generate monies for the city.	9/30/2021 7:36 AM
3	Pond with benches to children play	9/29/2021 11:19 PM
4	Either a splash pad or a skate park	9/5/2021 11:24 PM
5	Trees for shade, walking track, picnic area	9/5/2021 10:04 AM
6	Covered picnic tables and restrooms	9/4/2021 11:44 AM

Q12 Would you consider this location for a special use park (e.g. skate park)?

Answered: 70 Skipped: 9

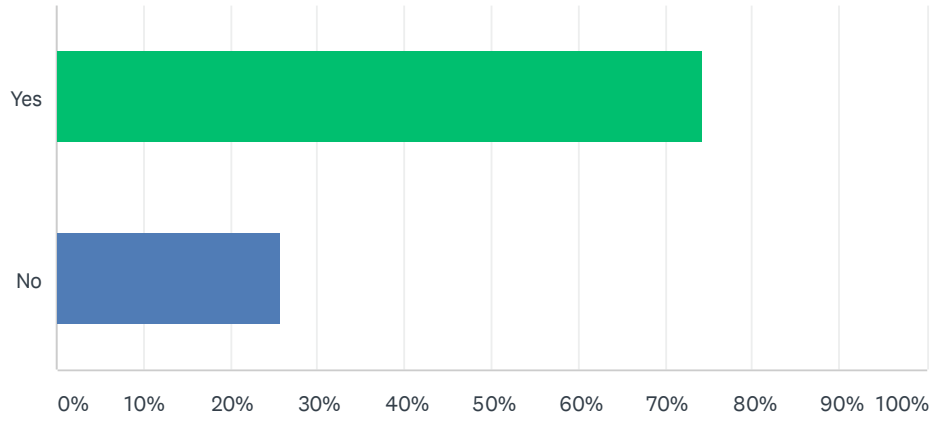

ANSWER CHOICES	RESPONSES	
Yes	74.29%	52
No	25.71%	18
Total Respondents: 70		

Q13 Would you consider selling this property?

Answered: 69 Skipped: 10

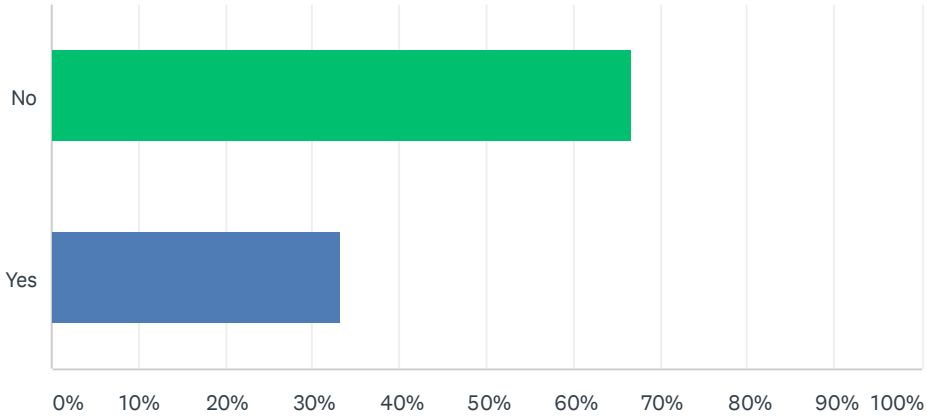

ANSWER CHOICES	RESPONSES	
No	66.67%	46
Yes	33.33%	23
Total Respondents: 69		

Q14 If there was sidewalk connectivity to this park, what mode of transportation would you use to get to the park?

Answered: 66 Skipped: 13

#	RESPONSES	DATE
1	Bike or walk	9/30/2021 3:45 PM
2	Car.	9/30/2021 3:01 PM
3	personal vehicle	9/30/2021 2:25 PM
4	Bicycle walk	9/30/2021 1:28 PM
5	Walk, bike	9/30/2021 12:25 PM
6	Car	9/30/2021 12:23 PM
7	Car	9/30/2021 12:13 PM
8	Bike	9/30/2021 11:03 AM
9	Walking	9/30/2021 10:45 AM
10	Drive	9/30/2021 10:04 AM
11	Car	9/30/2021 8:52 AM
12	Walk bikes	9/30/2021 8:06 AM
13	Vehicles	9/30/2021 7:57 AM
14	I would have to drive.	9/30/2021 7:36 AM
15	Walk	9/30/2021 6:15 AM
16	Car	9/30/2021 6:00 AM
17	Bike	9/30/2021 5:43 AM
18	Walk	9/30/2021 4:56 AM
19	Car	9/30/2021 3:46 AM
20	All	9/30/2021 12:24 AM
21	Walk or bike	9/29/2021 11:55 PM
22	Feet	9/29/2021 11:37 PM
23	Bicycle	9/29/2021 11:19 PM
24	Walk or bike	9/29/2021 10:42 PM
25	Walking	9/29/2021 9:55 PM
26	Bicycle or golf cart	9/29/2021 8:21 PM
27	Bicycle	9/29/2021 7:56 PM
28	Car	9/29/2021 7:46 PM
29	Car	9/29/2021 6:38 PM
30	Depends on location	9/29/2021 6:17 PM
31	C	9/29/2021 4:38 PM

32	Foot	9/8/2021 3:51 AM
33	Drive	9/6/2021 12:32 AM
34	Drive	9/5/2021 11:24 PM
35	Bike	9/5/2021 10:04 AM
36	Bikes or car.	9/5/2021 9:30 AM
37	Car	9/5/2021 9:13 AM
38	Bike	9/4/2021 7:20 PM
39	Vehicle, there are no sidewalks in our neighborhood	9/4/2021 12:55 PM
40	Car	9/4/2021 12:06 PM
41	Roller skates, biking, walking/running, push scooter	9/4/2021 11:44 AM
42	Bicycle	9/4/2021 9:14 AM
43	Car	9/4/2021 8:35 AM
44	Walk or bike, unless it’s too far from my home.	9/4/2021 7:56 AM
45	Ride bikes or drive	9/4/2021 7:22 AM
46	Bike or drive	9/4/2021 5:21 AM
47	car	9/4/2021 3:16 AM
48	Car	9/3/2021 11:02 PM
49	Car	9/3/2021 11:00 PM
50	Bike	9/3/2021 10:42 PM
51	Walking	9/3/2021 7:45 PM
52	Car	9/3/2021 7:34 PM
53	Personal vehicle	9/3/2021 7:30 PM
54	Walk	9/3/2021 7:28 PM
55	Car	9/3/2021 7:02 PM
56	Car	9/3/2021 6:02 PM
57	Car	9/3/2021 5:42 PM
58	Car, I’m on north side	9/3/2021 5:32 PM
59	Walk or bike	9/3/2021 5:20 PM
60	Car	9/3/2021 5:14 PM
61	Walk	9/3/2021 4:51 PM
62	Walking, biking	9/3/2021 4:45 PM
63	Walk	9/3/2021 4:41 PM
64	Walk	9/3/2021 3:23 PM
65	Walking	9/3/2021 3:23 PM
66	Car	9/3/2021 3:20 PM

Q14 If there was sidewalk connectivity to this park, what mode of transportation would you use to get to the park?



Q15 Other comments:

Answered: 17 Skipped: 62

#	RESPONSES	DATE
1	Na	9/30/2021 3:45 PM
2	Na	9/30/2021 12:23 PM
3	N/A	9/30/2021 10:45 AM
4	I love the idea of this being on the table for possibilities.	9/30/2021 7:36 AM
5	None	9/30/2021 6:15 AM
6	Improve the area	9/30/2021 12:24 AM
7	We need a modern park like the Houston areas have. Even their neighborhood parks are better then anything we have around here.	9/29/2021 7:56 PM
8	Making it a special use park, like just a skate park, is too limiting & only makes it available to those who skate & no one else.	9/5/2021 9:30 AM
9	Please don’t sell for private business development. Reforestation is preferred than selling.	9/4/2021 11:44 AM
10	I believe it’s a great idea to have a skate park or any recreational opportunities geared toward our youth and teens.	9/4/2021 7:56 AM
11	A skate park would be great, it's just not something I personally would use. It would still be a great use of the space.	9/4/2021 5:21 AM
12	None	9/3/2021 7:45 PM
13	Na	9/3/2021 7:34 PM
14	Personal vehicle	9/3/2021 7:30 PM
15	Thank you!	9/3/2021 5:32 PM
16	None	9/3/2021 4:45 PM
17	Shade covering for playground and possible walking trail	9/3/2021 3:20 PM

Q16 How would you like to use this park?

Answered: 52 Skipped: 27

#	RESPONSES	DATE
1	Stage, food truck park, picnics	9/30/2021 3:47 PM
2	Anything is viable.	9/30/2021 3:02 PM
3	i wouldnt	9/30/2021 2:27 PM
4	Commercial recreation	9/30/2021 1:29 PM
5	Walking	9/30/2021 12:15 PM
6	We need a park that is centered around gathering and cultural activities. This would enhance our ability to have concerts, programs, plays, and civic events here. It's in the heart of downtown and would be a great location and amenity. Keep it simple and open and spend the money on the Performance area, monumentation for Veterans, and Restroom Facilities. I would also suggest a green room if possible for changing and comfort of performers.	9/30/2021 10:54 AM
7	Food trucks and entertainment	9/30/2021 8:08 AM
8	Beautify without adding alot of amenities at this time.	9/30/2021 7:41 AM
9	For entertainment	9/30/2021 5:48 AM
10	Outdoor concert, food trucks, picnic tables	9/30/2021 5:44 AM
11	Relax	9/30/2021 4:57 AM
12	For veterans wall etc	9/30/2021 12:26 AM
13	Public concerts	9/29/2021 11:57 PM
14	Often	9/29/2021 11:39 PM
15	Entertaining	9/29/2021 11:30 PM
16	For music events, fun runs, celebrations.	9/29/2021 10:45 PM
17	Food trucks	9/29/2021 9:56 PM
18	Concerts events walking trails	9/29/2021 7:58 PM
19	Weekend	9/29/2021 7:47 PM
20	I don’t know	9/29/2021 6:40 PM
21	As proposed above	9/29/2021 6:19 PM
22	Community events	9/8/2021 3:54 AM
23	Public concerts, picnics, family time	9/6/2021 12:33 AM
24	Sounds like some good ideas	9/5/2021 11:27 PM
25	Community events	9/5/2021 10:06 AM
26	Exactly as stated above. It's perfect. If the weather would cooperate with the live concerts then that would be great. We already missed one of the September Friday concerts.	9/5/2021 9:34 AM
27	Live music and other entertainment	9/5/2021 9:14 AM
28	Street festivals	9/4/2021 7:21 PM
29	Water feature	9/4/2021 12:57 PM
30	As a community center space---stage space, picnic space, food trucks. Make it a regular	9/4/2021 12:11 PM

	place to do things as a family, instead of used only for special occasions	
31	Gathering, casual food truck dining, casual outdoor use for scenery (gardens, gazebos/benches/sculptures), market venue use (art markets, farmers market, etc.)	9/4/2021 11:50 AM
32	As a venue for live events	9/4/2021 9:15 AM
33	I'd like to see it used for community events, veterans memorials, and picnic areas.	9/4/2021 8:02 AM
34	I plan to come with my family to the concert nights and any other city-sponsored family event.	9/4/2021 7:24 AM
35	I like the idea on the previous page.	9/4/2021 5:24 AM
36	walking	9/4/2021 3:18 AM
37	Unknown	9/3/2021 11:04 PM
38	Concert space, or leisurely	9/3/2021 11:02 PM
39	As proposed	9/3/2021 7:46 PM
40	Unsure	9/3/2021 7:35 PM
41	Veterans memorial/family events	9/3/2021 7:31 PM
42	Open	9/3/2021 7:28 PM
43	Current use. Music, downtown events, beautification, picture location.	9/3/2021 7:11 PM
44	Food trucks coming	9/3/2021 6:03 PM
45	Amphitheater and art	9/3/2021 5:33 PM
46	Gazebo, stage/ampitheater, picnic use, food trucks	9/3/2021 5:24 PM
47	Family	9/3/2021 5:15 PM
48	Concerts and events	9/3/2021 4:46 PM
49	Family fun	9/3/2021 4:42 PM
50	Downtown entertainment and social gathering space.	9/3/2021 3:24 PM
51	Playground and exercise	9/3/2021 3:24 PM
52	Concert and special events area	9/3/2021 3:20 PM

Q16 How would you like to use this park?



Q17 When would you use the park?

Answered: 54 Skipped: 25

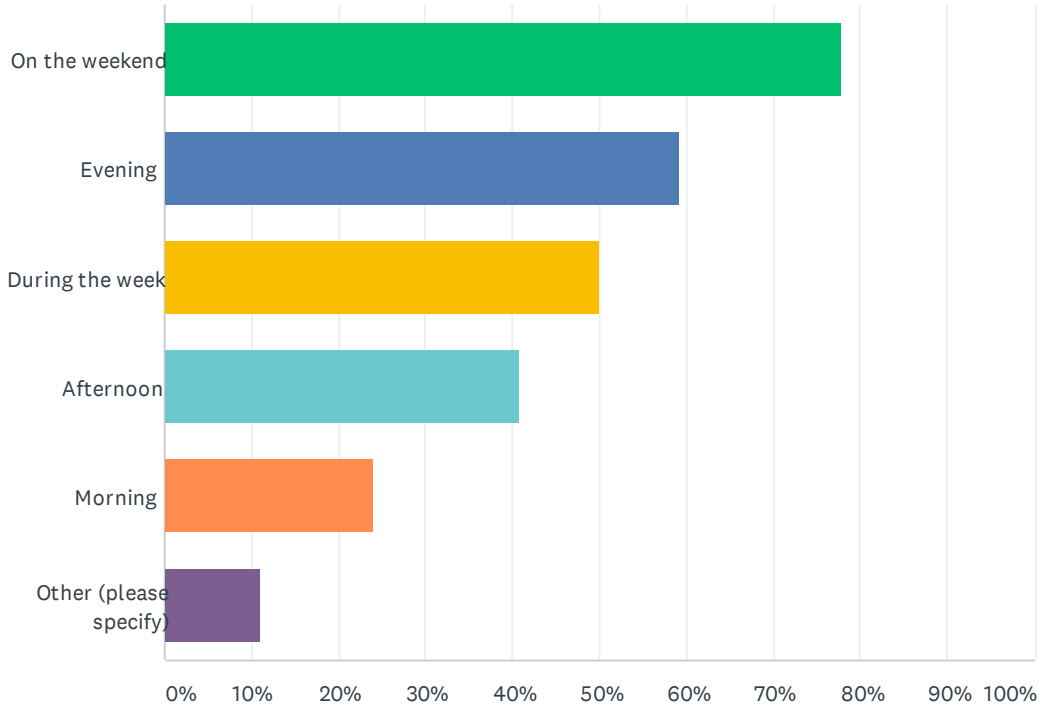

ANSWER CHOICES	RESPONSES	
On the weekend	77.78%	42
Evening	59.26%	32
During the week	50.00%	27
Afternoon	40.74%	22
Morning	24.07%	13
Other (please specify)	11.11%	6
Total Respondents: 54		

#	OTHER (PLEASE SPECIFY)	DATE
1	i would not	9/30/2021 2:27 PM
2	Random	9/30/2021 8:08 AM
3	Occasionally for walking the track. Although, please consider residents utilizing the track at the old middle school.	9/30/2021 7:41 AM
4	I probably wouldn't	9/5/2021 11:27 PM
5	Concerts? Special events like Heart of Angleton	9/4/2021 12:11 PM
6	All of the above in season	9/3/2021 11:04 PM

Q18 If ample seating was provided, would you use this park more frequently?

Answered: 57 Skipped: 22

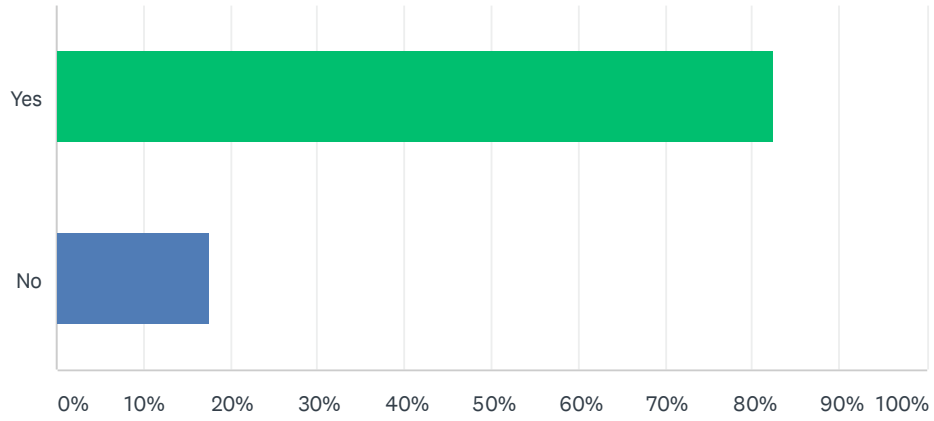

ANSWER CHOICES	RESPONSES	
Yes	82.46%	47
No	17.54%	10
Total Respondents: 57		

Q19 Are there other park amenities not listed above that you would like to be considered in this area?

Answered: 39 Skipped: 40

#	RESPONSES	DATE
1	Na	9/30/2021 3:47 PM
2	No.	9/30/2021 3:02 PM
3	no	9/30/2021 2:27 PM
4	No	9/30/2021 1:29 PM
5	Green Room for Performers	9/30/2021 10:54 AM
6	Music	9/30/2021 8:08 AM
7	Not at this time.	9/30/2021 7:41 AM
8	No	9/30/2021 5:48 AM
9	No	9/30/2021 5:44 AM
10	No	9/30/2021 4:57 AM
11	No	9/30/2021 12:26 AM
12	Restroom	9/29/2021 11:57 PM
13	No	9/29/2021 11:39 PM
14	Maybe a strong shelter building for when hurricane evacuation	9/29/2021 11:30 PM
15	Shaded areas	9/29/2021 10:45 PM
16	Bike trails	9/29/2021 7:58 PM
17	Obstacle, skate	9/29/2021 7:47 PM
18	No	9/29/2021 6:40 PM
19	A labyrinth or other meditative space would be nice	9/29/2021 6:19 PM
20	Would be great for farmers market or art shows etc. Ample space for events like that as well would be neat	9/8/2021 3:54 AM
21	Unique artwork by local artist. Things like cracks in the sidewalk painted or shadow street or building art	9/5/2021 11:27 PM
22	Park benches, landscaping	9/5/2021 10:06 AM
23	No. I think it's already perfect.	9/5/2021 9:34 AM
24	Bike paths	9/4/2021 7:21 PM
25	Make this space our town square, where the heart of the city's community events are.	9/4/2021 12:11 PM
26	Small play scale for Children would be nice, while other aspects are more focused on adult/10+ use. Water fountains and occasional doggie poop bag stations would be thoughtful.	9/4/2021 11:50 AM
27	I'd like to make certain they'll be plenty of lighting and landscaping for downtown beautification.	9/4/2021 8:02 AM
28	Sails for shade	9/4/2021 5:24 AM
29	amphitheater	9/4/2021 3:18 AM
30	Unknown	9/3/2021 11:04 PM

31	Garden	9/3/2021 11:02 PM
32	No	9/3/2021 7:46 PM
33	No	9/3/2021 7:35 PM
34	Concert venue	9/3/2021 7:31 PM
35	No	9/3/2021 6:03 PM
36	Plenty of food trucks and restrooms	9/3/2021 5:33 PM
37	No	9/3/2021 5:24 PM
38	The gazebo back	9/3/2021 4:46 PM
39	Interesting lighting components to make it look cool at night in the downtown area.	9/3/2021 3:24 PM

Q20 Other comments:

Answered: 14 Skipped: 65

#	RESPONSES	DATE
1	Na	9/30/2021 3:47 PM
2	N/A	9/30/2021 3:02 PM
3	The focus of Veterans Park should have some beautiful monumentation to serve as memorial, recognition, and reflection of our Veterans.	9/30/2021 10:54 AM
4	Great ideas...I hope something comes of it. Please don't forget your retired seniors. Safe walking...benches...shade...get your seniors moving!!!	9/30/2021 7:41 AM
5	No	9/30/2021 12:26 AM
6	Build a modern half covered amphitheater and stage	9/29/2021 7:58 PM
7	The gazebo is a beautiful and meaningful addition to our downtown area.	9/5/2021 10:06 AM
8	More concerts would be fantastic.	9/5/2021 9:34 AM
9	Park benches in various locations, not only in Veterans Park, but in all park areas or downtown would be well-received, in my opinion.	9/4/2021 8:02 AM
10	None	9/4/2021 5:24 AM
11	None	9/3/2021 7:46 PM
12	No	9/3/2021 7:35 PM
13	And artwork! Thank you!	9/3/2021 5:33 PM
14	None	9/3/2021 4:46 PM

Q21 · Are you a dog owner?

Answered: 59 Skipped: 20

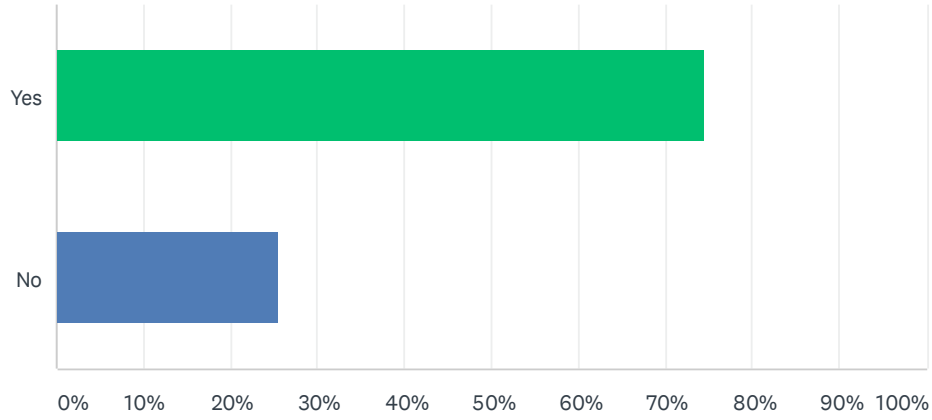

ANSWER CHOICES	RESPONSES	
Yes	74.58%	44
No	25.42%	15
Total Respondents: 59		

Q22 How large do you think a dog park needs to be?

Answered: 49 Skipped: 30

#	RESPONSES	DATE
1	At least and acre or two	9/30/2021 3:48 PM
2	i dont know	9/30/2021 2:28 PM
3	Enough to accommodate general public	9/30/2021 1:33 PM
4	I am not sure	9/30/2021 12:18 PM
5	No smaller than an acre.	9/30/2021 11:41 AM
6	Several Acres	9/30/2021 11:01 AM
7	About 1 acre to 2	9/30/2021 10:48 AM
8	Large enough for 2 dozen dogs to run freely and play.	9/30/2021 7:46 AM
9	No smaller than current one	9/30/2021 6:58 AM
10	No more than 1 acre	9/30/2021 5:46 AM
11	Large enough to keep the dogs from fighting	9/30/2021 4:59 AM
12	Not very big	9/30/2021 12:27 AM
13	About the size it is now	9/29/2021 11:59 PM
14	Large enough to have a big dog section and a little dog section	9/29/2021 11:40 PM
15	I'm not familiar with size, but dogs need to able to run around in large areas	9/29/2021 10:53 PM
16	1 acre	9/29/2021 9:57 PM
17	Not big	9/29/2021 8:00 PM
18	Not sure	9/29/2021 7:48 PM
19	An acre	9/29/2021 6:40 PM
20	1-2 acres?	9/8/2021 3:55 AM
21	About half a football field	9/6/2021 12:35 AM
22	Big	9/5/2021 11:29 PM
23	One acre	9/5/2021 10:19 AM
24	The one next to the animal shelter is the perfect size.	9/5/2021 9:42 AM
25	Not sure	9/5/2021 9:15 AM
26	2 acres	9/4/2021 7:22 PM
27	I think the area is of ample suze	9/4/2021 12:59 PM
28	The current Officer Cash park is good sized for small to medium dogs. Frequent use with larger dogs needs more space	9/4/2021 12:14 PM
29	1+ acre of free run space, not including benches, covered seating areas, etc.	9/4/2021 11:54 AM
30	Several acres	9/4/2021 9:32 AM
31	Not sure how large or number of acres, but enough room for owners and dogs to play and run.	9/4/2021 8:09 AM
32	I think the current size is great.	9/4/2021 5:27 AM

33	not sure	9/4/2021 3:21 A...
34	Unknown	9/3/2021 11:06 PM
35	Few acres	9/3/2021 11:03 PM
36	Multiple acres	9/3/2021 7:47 PM
37	Unknown	9/3/2021 7:36 PM
38	5 acres	9/3/2021 7:33 PM
39	Dont know	9/3/2021 7:29 PM
40	The size it is now.	9/3/2021 6:04 PM
41	Medium, not too big, dogs won’t come when you call	9/3/2021 5:36 PM
42	No clue	9/3/2021 5:28 PM
43	I like the size of the Officer cash park- definitely no smaller- Lake Jackson’s new one is small and we don’t like it!	9/3/2021 5:17 PM
44	I don't think it's needed	9/3/2021 4:52 PM
45	The one you have is sufficient if it had amenities, shade and was actually up-kept and people picked up after their dogs	9/3/2021 4:49 PM
46	It is big enough	9/3/2021 4:43 PM
47	At least 1 acre	9/3/2021 3:26 PM
48	3-5 acres	9/3/2021 3:25 PM
49	About the size it is now	9/3/2021 3:22 PM

Q23 Do you prefer small and large dog areas to be separated?

Answered: 55 Skipped: 24

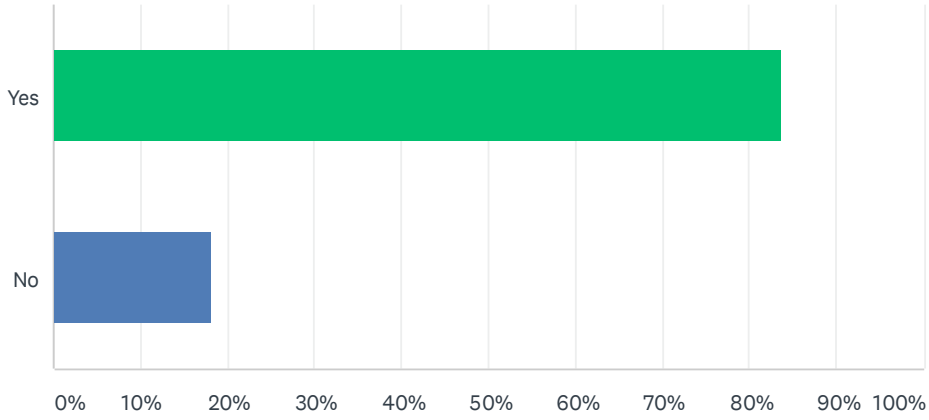

ANSWER CHOICES	RESPONSES	
Yes	83.64%	46
No	18.18%	10
Total Respondents: 55		

Q24 What types of dog park amenities would you like to see?

Answered: 55 Skipped: 24

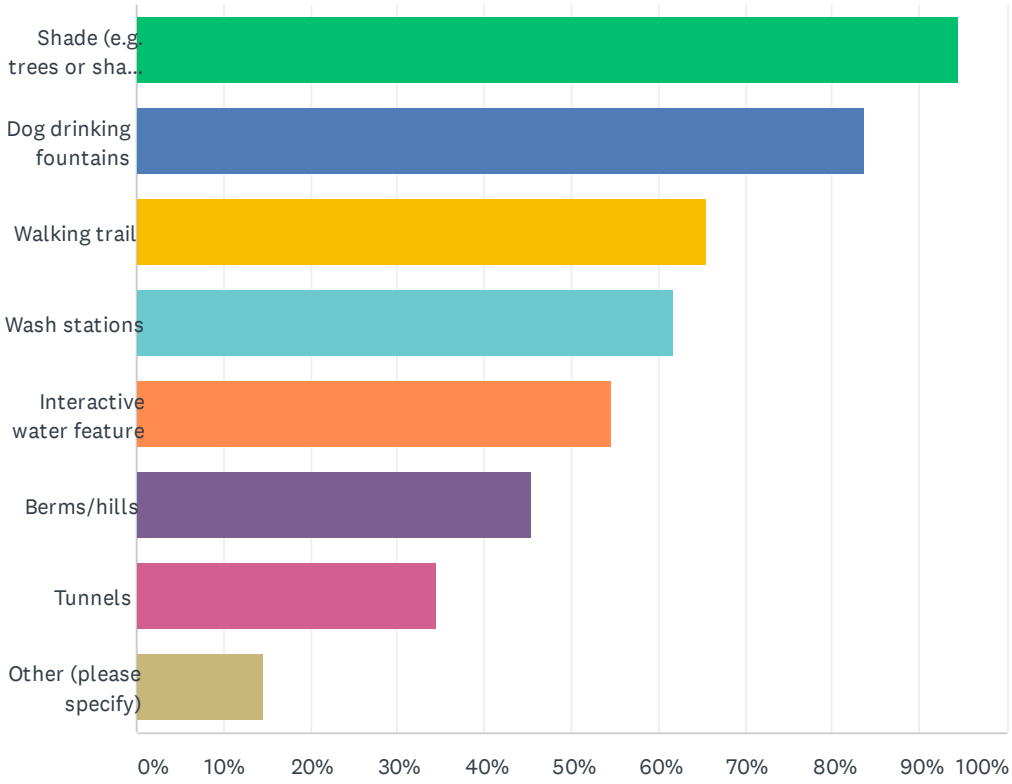

ANSWER CHOICES	RESPONSES	
Shade (e.g. trees or shade structures)	94.55%	52
Dog drinking fountains	83.64%	46
Walking trail	65.45%	36
Wash stations	61.82%	34
Interactive water feature	54.55%	30
Berms/hills	45.45%	25
Tunnels	34.55%	19
Other (please specify)	14.55%	8
Total Respondents: 55		

#	OTHER (PLEASE SPECIFY)	DATE
1	Small obstacles placed around for their excercise and their brain excercise.	9/30/2021 7:46 AM
2	Trashcans/bags for poop pick up	9/8/2021 3:55 AM
3	Agility activities	9/6/2021 12:35 AM
4	Rinse station, obstacle courses, pond for the brave owners who don't fear mud	9/4/2021 11:54 AM
5	Benches throughout for dog owners.	9/4/2021 8:09 AM

6	N/A. I'd rather not see us waste space on a dog park. There's plenty around throughout the county and not used often compared to the number of dog owners.	9/3/2021 7:33 PM
7	Benches for the owners	9/3/2021 5:36 PM
8	Lots of shade and seating for their owners	9/3/2021 4:49 PM

Q25 Would you prefer a dog park be a special use park or incorporated into a larger park with additional park amenities (e.g. playground, trails, open space, picnic tables, etc.)?

Answered: 57 Skipped: 22

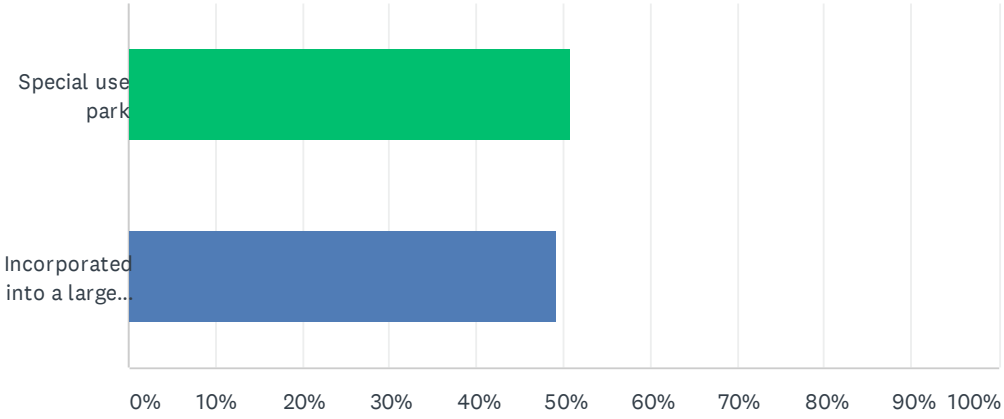

ANSWER CHOICES	RESPONSES	
Special use park	50.88%	29
Incorporated into a larger park	49.12%	28
TOTAL		57

Q26 If the dog park was closed on a weekly basis, which day would you prefer it be closed?

Answered: 53 Skipped: 26

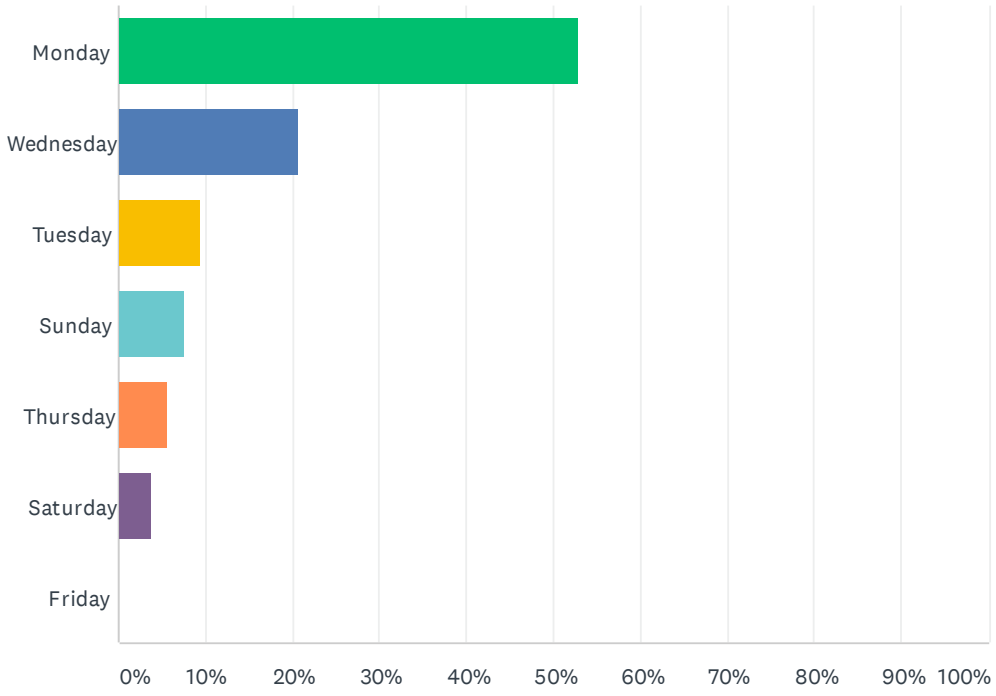

ANSWER CHOICES	RESPONSES	
Monday	52.83%	28
Wednesday	20.75%	11
Tuesday	9.43%	5
Sunday	7.55%	4
Thursday	5.66%	3
Saturday	3.77%	2
Friday	0.00%	0
TOTAL		53

Q27 Other comments:

Answered: 16 Skipped: 63

#	RESPONSES	DATE
1	Na	9/30/2021 3:48 PM
2	N/A	9/30/2021 10:48 AM
3	Dog parks if well maintained are a wonderful idea. Would you require updated shot records to be provided?	9/30/2021 7:46 AM
4	No	9/30/2021 12:27 AM
5	Nine	9/29/2021 8:00 PM
6	Please keep the current location open. Even if you open a new location. I think that dogs that are eligible for adoption should be playing in the dog park along with the public dogs. Angleton animal shelter needs a lot more interaction with the public. Our citizens should be more involved in fundraising activities. I never hear anything about Angleton Animal Shelter, but plenty from Lake Jackson, Freeport, & others.	9/5/2021 9:42 AM
7	..	9/4/2021 12:14 PM
8	Our current dog park needs a lot of work. Most hardly know where it is. It looks like someone's backyard that's been fenced in and isn't welcoming. It needs landscaping, shaded areas, and a welcoming entrance. It just looks like an afterthought, not a planned park area.	9/4/2021 8:09 AM
9	I didn't really have a preference on special use vs part of a bigger park I'm just glad there is one.	9/4/2021 5:27 AM
10	none	9/4/2021 3:21 AM
11	None	9/3/2021 7:47 PM
12	None	9/3/2021 7:36 PM
13	Rather not have a dog park.	9/3/2021 7:33 PM
14	Leave the current dog park location where it is and add features there.	9/3/2021 7:12 PM
15	Plenty of parking	9/3/2021 5:36 PM
16	A bigger dog park would be nice but if you put some work into the one we had it can be just as nice	9/3/2021 4:49 PM

AGENDA ITEM SUMMARY FORM

MEETING DATE: 10/18/2021

PREPARED BY: Megan Mainer, Director of Parks & Recreation

AGENDA CONTENT: Discussion and possible action on park development on Anderson, Kiber and other south side alternatives.

AGENDA ITEM SECTION: Regular Agenda

BUDGETED AMOUNT: $0.00

FUNDS REQUESTED: Not to Exceed $175,000.00

FUND: TBD

EXECUTIVE SUMMARY:

Staff has been asked to consider park development on two adjacent properties located on Anderson and Kiber. These properties together total about 5.3 acres. Both locations had substandard buildings that required demolition. The front acre of the Kiber plat is where Officer Cash Memorial Dog Park is currently located.

If park development is to be considered at this location, addressing Animal Control Center and park development needs would need to be analyzed. **T**he Animal Control Center may need to be relocated to another city property due to its aging infrastructure and need for expansion. Also, staff would need to ensure park development in this area would meet minimum park standards as well as address needs outlined by citizens.

Additionally, staff has researched another potential park location on the south side of town that could be considered which consists of nearly seven acres that would be accessible to south side residents. Staff would consider purchasing land in an amount not to exceed $175,000.

This item was brought to the Parks and Recreation Board on Monday, October 11, 2021. The Parks and Recreation Board made a motion to develop Kiber and Anderson lots for a larger improved dog park and pursue alternate land parcels for a park on the south side of town. The Parks and Recreation Board, also, discussed considering selling, developing, or building other city infrastructure at the current municipal pool site.

RECOMMENDATION:

Staff recommends ABLC provide feedback on future park development on Anderson and Kiber. Additionally, staff would like direction on whether or not to pursue purchasing land for future park development on the south side of town.

SUGGESTED MOTION:

I move we approve approve Kiber and Anderson lots for future dog park expansion and redevelopment and pursue alternate land parcels to develop a park on the south side of town.

ANDERSON LOT

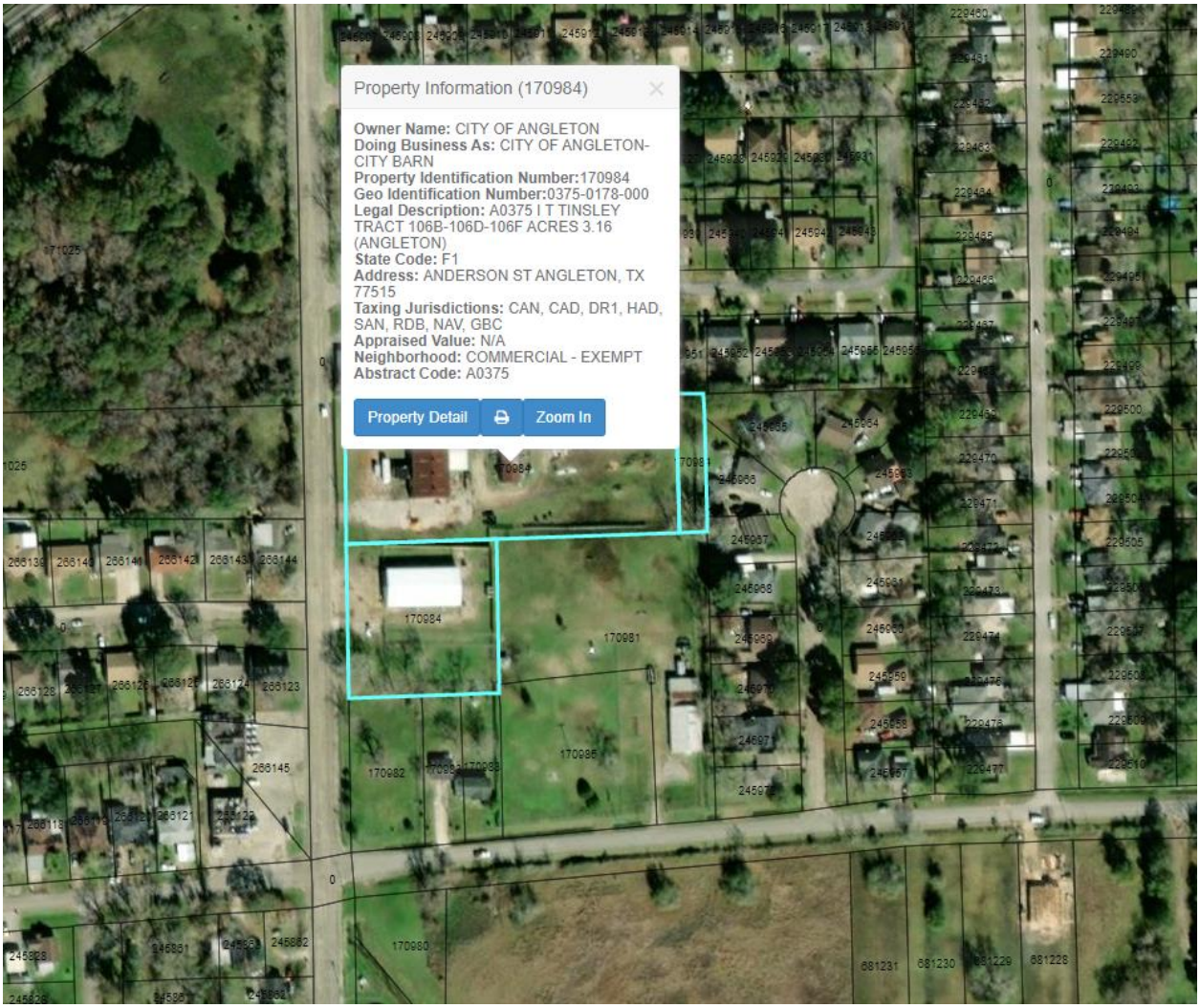

KIBER LOT

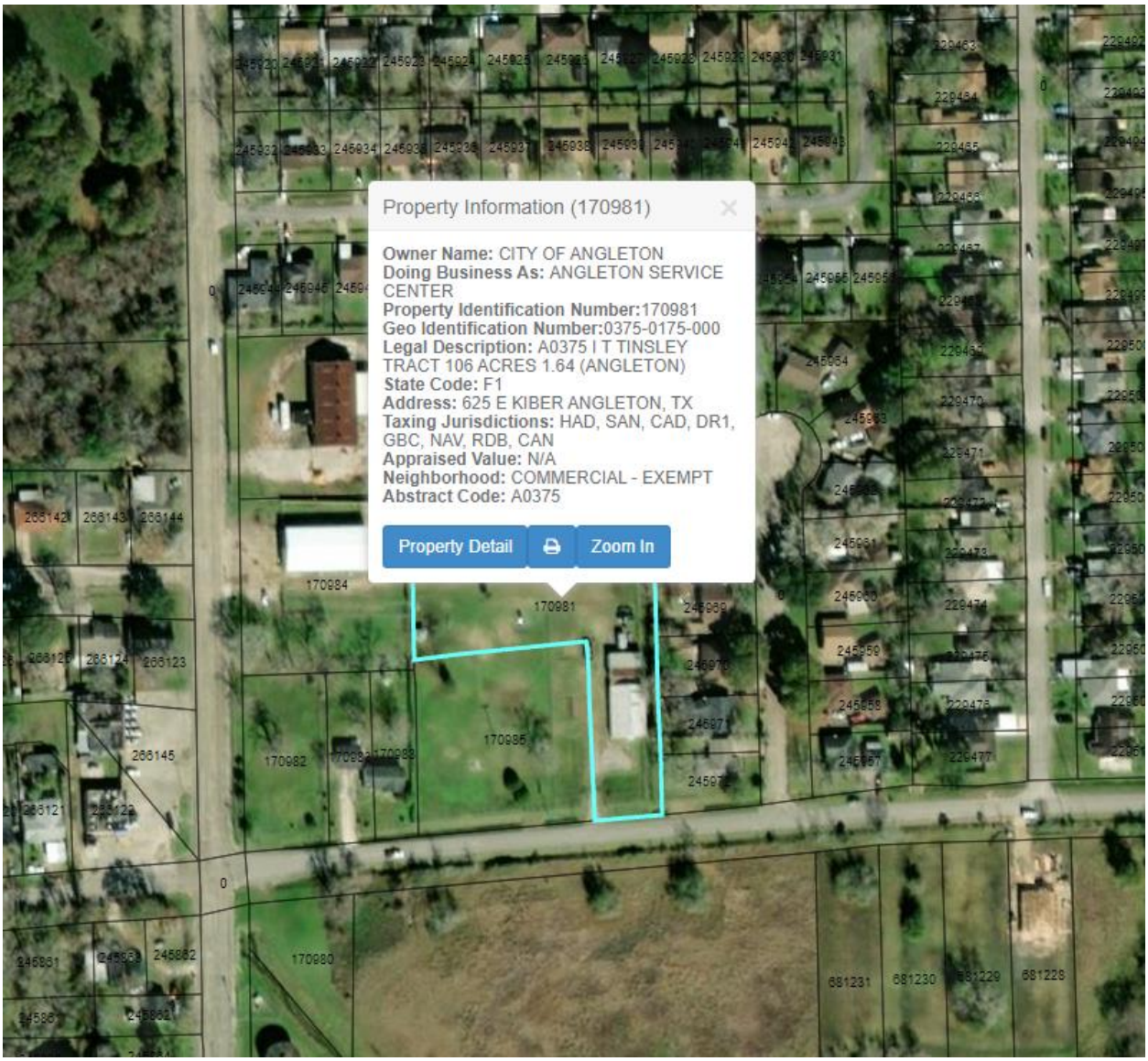
Property Information (170981)
Owner Name: CITY OF ANGLETON
Doing Business As: ANGLETON SERVICE CENTER
Property Identification Number:170981
Geo Identification Number:0375-0175-000
Legal Description: A0375 I T TINSLEY TRACT 106 ACRES 1.64 (ANGLETON)
State Code: F1
Address: 625 E KIBER ANGLETON, TX
Taxing Jurisdictions: HAD, SAN, CAD, DR1, GBC, NAV, RDB, CAN
Appraised Value: N/A
Neighborhood: COMMERCIAL - EXEMPT
Abstract Code: A0375
Property Detail
Zoom In
170984
170981
170985
170982
170980
681231
681230
681229
681228

OFFICER CASH MEMORIAL DOG PARK

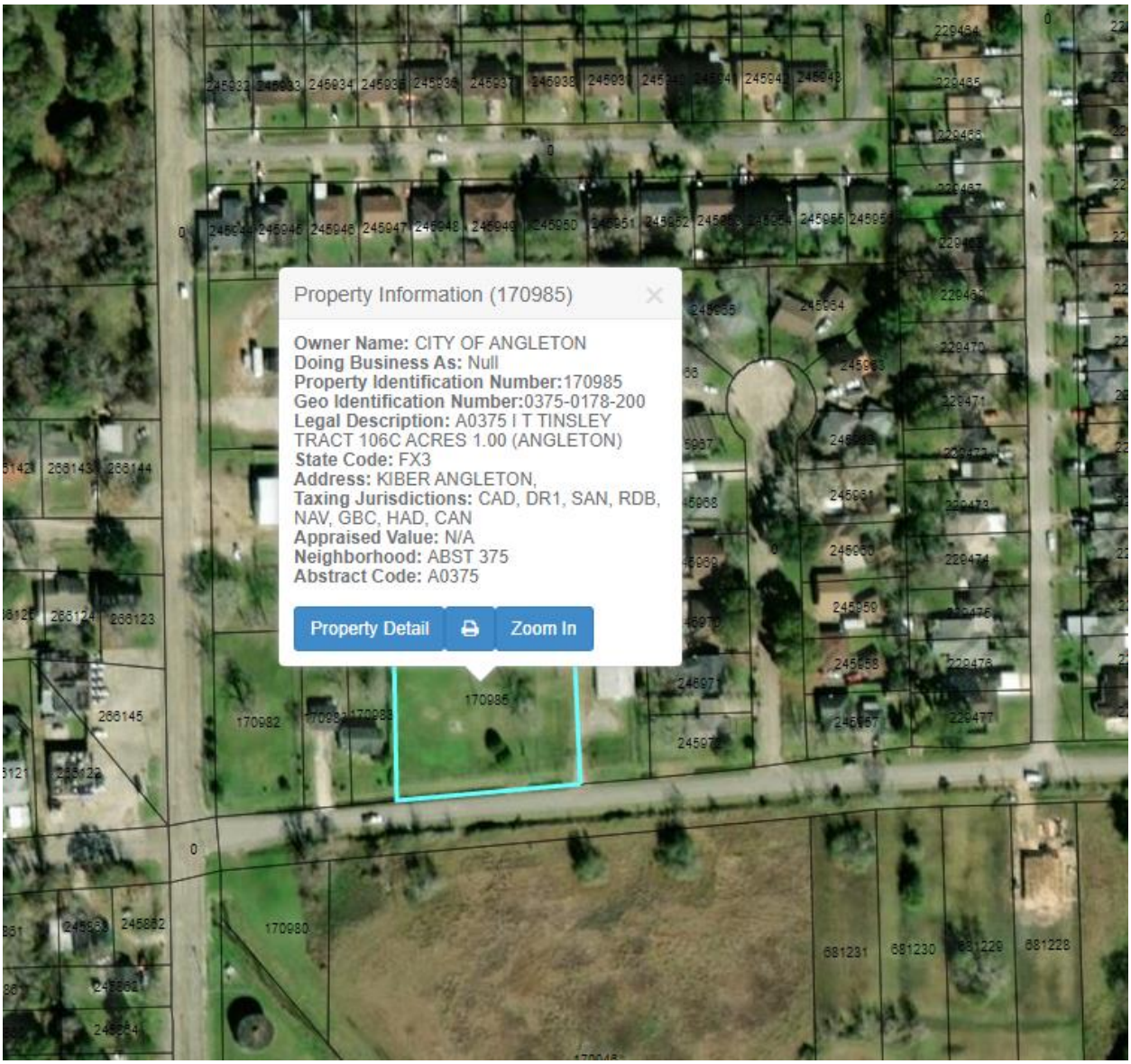

THE HEART OF BRAZORIA COUNTY ANGLETON

AGENDA ITEM SUMMARY FORM

MEETING DATE: 10/18/2021

PREPARED BY: Megan Mainer, Director of Parks & Recreation

AGENDA CONTENT: Discussion and possible action on closing Chenango between County parking lot access and egress allowing for Veterans Park expansion.

AGENDA ITEM SECTION: Regular Agenda

BUDGETED AMOUNT: $0 **FUNDS REQUESTED:** $0

FUND: NA

EXECUTIVE SUMMARY:

Staff was directed to present Chenango Street closure between County parking lot access and egress for Veterans Park expansion to the Parks and Recreation Board for discussion. Additionally proposed improvements to Veterans Park include burying power lines that run on the east and northeast corners of the park. Staff is in discussions with TNMP for cost estimates.

RECOMMENDATION:

Staff recommends the Parks and Recreation Board provide input regarding Chenango Street closure between County parking lot access and egress.

PROPOSED CHENANGO STREET CLOSURE



THE HEART OF BRAZORIA COUNTY ANGLETON

AGENDA ITEM SUMMARY FORM

MEETING DATE: 10/18/2021

PREPARED BY: Megan Mainer, Director of Parks & Recreation

AGENDA CONTENT: Discussion and possible action on funding field five lights at Bates Park softball complex.

AGENDA ITEM SECTION: Regular Agenda

BUDGETED AMOUNT: $0.00 **FUNDS REQUESTED:** $184,301 (+/- 10%)

FUND: 40-400-999

EXECUTIVE SUMMARY:

Staff was directed to approach ABLC about funding field five lights at Bates Park softball complex out of ABLC fund balance.

RECOMMENDATION:

Staff recommends ABLC discuss options to fund field five lights at Bates Park softball complex and determine if funding this project is an immediate priority.